CT
TN
92/
31
COPY 1

technical note

Test and Evaluation Plan for Precision Distance Measuring Equipment (DME/P) Interrogators

Field Test Plan

John Warburton

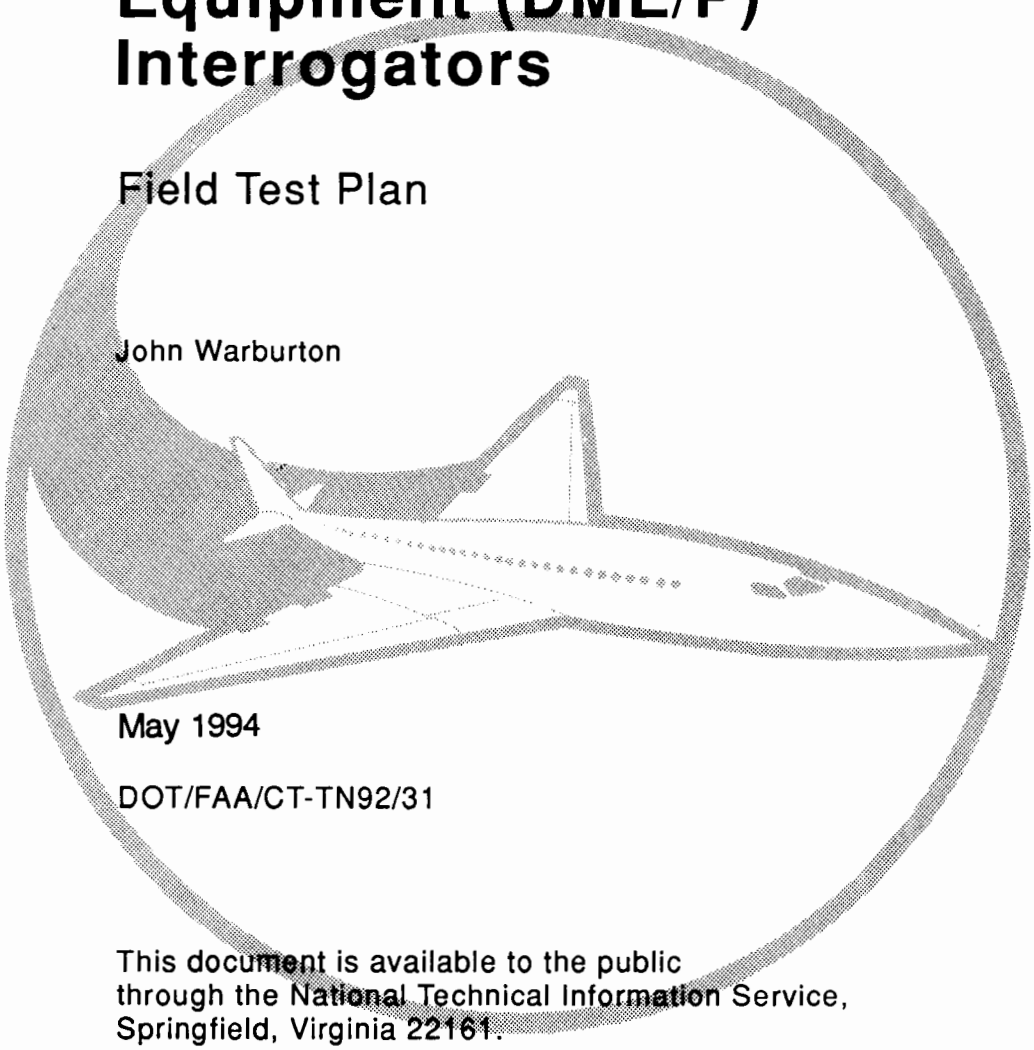

May 1994

DOT/FAA/CT-TN92/31

This document is available to the public through the National Technical Information Service, Springfield, Virginia 22161.

U.S. Department of Transportation
Federal Aviation Administration

Technical Center
Atlantic City International Airport, N.J. 08405

DOT/FAA
CT-TN
92/31
c. 1

FAA Technical Center
00016211

FAA
TECHNICAL CENTER
Atlantic City, N.J.

NOTICE

This document is disseminated under the sponsorship of the U.S. Department of Transportation in the interest of information exchange. The United States Government assumes no liability for the contents or use thereof.

The United States Government does not endorse products or manufacturers. Trade or manufacturers' names appear herein solely because they are considered essential to the objective of this report.

Technical Report Documentation Page

1. Report No.	2. Government Accession No.	3. Recipient's Catalog No.
DOT/FAA/CT-TN92/31		

4. Title and Subtitle	5. Report Date
Test and Evaluation (T&E) Plan For Precision Distance Measuring Equipment (DME/P) Interrogators, Test Plan	May 1994
	6. Performing Organization Code ACD-330
7. Author's John Warburton	8. Performing Organization Report No. DOT/FAA/CT-TN92/31
9. Performing Organization Name and Address Department of Transportation Federal Aviation Administration Technical Center Atlantic City International Airport, NJ 08405	10. Work Unit No. (TRAIS)
	11. Contract or Grant No. TO604A
12. Sponsoring Agency Name and Address DOT/Federal Aviation Administration Microwave Landing System Program Office 800 Independence Avenue Washington, DC	13. Type or Report and Period Covered Technical Note 1992
	14. Sponsoring Agency Code ANN-500

15. Supplementary Notes

16. Abstract

This test plan outlines the Test and Evaluation (T&E) process, and details the field T&E needed to support the Precision Distance Measuring Equipment (DME/P) interrogator procurement.

17. Key Words	18. Distribution Statement
DME/P Interrogator Test Plan DME/P Interrogator Requirements Flight Test Procedures	This documentation is available to the public through the National Technical Information Service, Springfield, Virginia 22161

19. Security Classif. (of this report)	20. Security Classif. (of this page)	21. No. of Pages	22. Price
Unclassified	Unclassified	22	

Form DOT F 1700.7 (18_72) Reproduction of completed page authorized

TABLE OF CONTENTS

	Page
EXECUTIVE SUMMARY	v
1. INTRODUCTION	1
2. T&E PHILOSOPHY	1
2.1 Mission	1
2.2 System Description	
2.3 Required Operational Characteristics	1
2.4 Required Technical Characteristics	2
2.4.1 Specific Field Test Technical Requirements	2
3. T&E APPROACH AND CONCEPT	3
3.1 Factory Acceptance Testing	3
3.2 Laboratory Acceptance Testing	3
3.3 Field Testing	3
3.3.1 Ground Testing	3
3.3.2 Flight Testing	4
4. T&E FLOW DIAGRAM	6
5. ORGANIZATIONAL ROLES AND RESPONSIBILITIES	7
5.1 VNTSC	7
5.2 FAA Technical Center	7
5.3 ELTA Electronics Ltd.	7
6. OPERATING AND CONTROL DOCUMENTS	7
6.1 Ground Data Collection Log	7
6.2 Airborne Data Collection Log	7
7. INSTRUMENTATION	10
7.1 Ground Test Vehicle Configuration	10
7.2 Flight Test Configuration	10
8. DATA ANALYSIS	11
8.1 Ground Test Data	11
8.2 Flight Test Data	11

TABLE OF CONTENTS (CONTINUED)

	Page
9. TEST CONFIGURATION	11
9.1 Tracking Facilities	11
9.2 Ground Navigation Equipment	11
9.3 Additional Facilities	12
10. REVIEWS AND REPORTS	12
10.1 Factory Acceptance Testing	12
10.2 Laboratory Acceptance Testing	12
10.3 Field Acceptance Testing	12
11. INTEGRATED SCHEDULE	12
11.1 Factory Acceptance Testing	12
11.2 Laboratory Acceptance Testing	13
11.3 Field Acceptance Testing	13
BIBLIOGRAPHY	14
APPENDIXES	
A - Digital Data Words	
B - Position Reference Systems	
C - FAA Technical Center Map	

LIST OF ILLUSTRATIONS

Figures	Page
1 T&E Flow Diagram	6
2 DME/P Ground Data Collection Log	8
3 DME/P Airborne Data Collection Log	9
4 Ground Test Vehicle Configuration	10

EXECUTIVE SUMMARY

This test plan specifies the effort required to perform field and flight testing of the Microwave Landing System (MLS) Precision Distance Measuring Equipment (DME/P) interrogators. The interrogators being delivered must meet all specifications given in Contract DTRS-57-87-R-00048. Government verification of compliance will take place at the Volpe National Transportation Center (VNTSC) and at the Federal Aviation Administration (FAA) Technical Center.

1. INTRODUCTION.

This test plan outlines the Test and Evaluation (T&E) process, and details the field T&E needed to support the Precision Distance Measuring Equipment (DME/P) interrogator procurement. Contract DTRS-57-87-R-00048 was awarded to ELTA Electronics Ltd., a subsidiary of Israel Aircraft Industries Ltd. (IAI). In Phase I of the procurement, ELTA Electronics Ltd. is required to design and fabricate two manufacturable prototype airborne interrogators. These interrogators must provide the features, characteristics, and operational performance specified in the contract. Government testing must verify compliance before Phase II, an additional purchase of up to 20 interrogators, can begin.

Government verification of compliance with specified requirements will occur in two phases. Laboratory testing will occur at the Volpe National Transportation Systems Center (VNTSC) in Cambridge, Massachusetts. Field testing will occur at the Federal Aviation Administration (FAA) Technical Center, Atlantic City International Airport, New Jersey.

2. T&E PHILOSOPHY.

2.1 MISSION.

DME/P provides the precision range function to complement the azimuth and elevation guidance for precision approach and landing for all types of aircraft throughout the Microwave Landing System (MLS) coverage volume.

2.2 SYSTEM DESCRIPTION.

DME system operation begins when an interrogator transmits a coded pulse pair to a selected ground station. The ground station receives this interrogation and, after a specific delay time, returns a coded pulse pair. The reply is received by the interrogator, and its arrival time is stored. The interrogator calculates the two-way transmission delay by subtracting the interrogation time from the reply arrival time. The transmission delay is converted to range.

DME/P system design has evolved from the existing international L-band DME system described above. The major functional difference between the two systems is that DME/P has two modes of operation: initial approach (IA) and final approach (FA). It operates as a conventional DME in IA mode. FA mode is available when a DME/P interrogator sends precision interrogations to a DME/P ground station. This mode provides improved accuracy in the final approach area.

2.3 REQUIRED OPERATIONAL CHARACTERISTICS.

The MLS DME/P interrogator is intended to be fully compatible with existing Narrow Band Distance Measuring Equipment (DME/N) ground

facilities and with existing and future DME/P ground facilities. In IA mode, the DME/P interrogator operates as other conventional interrogators. IA mode is active when the DME/P interrogator is used in conjunction with a DME/N ground station, or with a DME/P ground station at a range greater than 8 nautical miles (nmi). System accuracy will be equivalent or better than that of DME/N.

When a DME/P interrogator is operating with a DME/P ground station, within a distance of 8 nmi, the interrogator begins transmitting precision mode interrogations, as well as conventional interrogations. If the ground station replies to the precision interrogations, the interrogator will switch into FA mode. This mode is characterized by the following innovations over DME/N techniques:

a. Interrogation rate is increased from 16 to 40 times per second.

b. Interrogation pulse shape is a fast rise time $\cos/\cos^2$ envelope compatible with ICAO Annex 10 spectrum requirements.

c. Receiver bandwidth was increased to accept fast rise time pulses from the ground station.

d. A low level pulse detection technique is used to discriminate against short delay ground-to-air multipath signals.

e. A high speed range counter is used for greater resolution of transmission and arrival times.

2.4 REQUIRED TECHNICAL CHARACTERISTICS.

Prototype airborne interrogators must provide the features, characteristics, and operational performance specified in RTCA/DO-189, "Minimum Operational Performance Standards (MOPS) for Airborne Interrogator DME Operation Within the Radio Frequency of 960-1215 Megahertz", September 1985. The design will also comply with requirements specified in Attachment J.1., "Specification & Figures for DME/P,N Airborne Interrogator with NAV set controller", November 1986.

2.4.1 Specific Field Test Technical Requirements.

System accuracy specifications for DME/P are defined in specific areas of the MLS coverage volume. They are defined in terms of particular signal qualities, Path Following Error (PFE) and Control Motion Noise (CMN). They are also defined for the mode in which the DME/P is operating, IA or FA. The required system accuracy specifications for DME/P are given in Microwave Landing System (MLS) Interoperability and Performance Requirements, paragraph 3.5.4. Interrogator accuracy specifications are given in Minimum Operational Performance Standards (MOPS) for Airborne Interrogator

Distance Measuring Equipment (DME) Operation within the Radio Frequency of 960-1215 Megahertz, paragraphs 2.2 and 2.3, and are included below.

2.4.1.1 DME/N.

Total airborne error shall not exceed, on a 95 percent probability basis, 0.17 nmi, (315 meters (m)).

2.4.1.2 DME/P.

PFE and CMN shall not exceed the following limits with a 95 percent probability:

FA mode
- PFE ±15 m (±50 feet)
- CMN ±10 m (±33 feet)

IA mode
- PFE ±30 m (±100 feet)
- CMN ±15 m (±50 feet)

3. T&E APPROACH AND CONCEPT.

3.1 FACTORY ACCEPTANCE TESTING.

Factory acceptance testing will demonstrate limited operation of the interrogator. The testing will occur at the ELTA Electronics Ltd. facility in Ashod, Israel.

3.2 LABORATORY ACCEPTANCE TESTING.

Laboratory testing will establish baseline operation of the interrogator with simulated ground stations under normal conditions, under adverse signal environments, and with various air traffic loading conditions. The testing will occur at the VNTSC facility in Cambridge, MA.

3.3 FIELD TESTING.

Field testing will verify static and dynamic accuracy of the interrogator. Interoperability with installed MLS ground equipment, as well as with conventional DME/N facilities, will be demonstrated. The testing will occur at the FAA Technical Center facility. Field testing will include ground and flight testing.

3.3.1 Ground Testing.

Static range accuracy of the ELTA Electronics Ltd. EL/K 7200 DME/P-N will be tested at various surveyed points on and around the FAA Technical Center. The selected points will include, but not be limited to, MLS test points A6 and A1 of each MLS system, as defined in the "Manual on Testing Radio Navigation Aids, Volume III, Microwave Landing System (MLS)." The data will be collected

in an instrumented test vehicle equipped with a 50-foot telescoping mast. The test vehicle's mast with the attached transponder antenna will be positioned over a precisely surveyed point. The mast will be raised up to 9 heights ranging from 10 to 50 feet above the point. A large sample of full rate digital data from the interrogator will be recorded at each point. A diagram of the MLS van configuration is included as figure 1, section 10, in the previously referenced manual.

The data will be collected and recorded using a computer equipped with an ARINC 429 interface. Data content and output rates are included in appendix A, and will include filtered and raw precision range, range rate, and signal strength. Mean and standard deviation values will be computed, as well as plots of the range error versus position.

Throughout ground testing, detected video will be observed using a digitizing oscilloscope and a spectrum analyzer. Representative video will be collected and stored for correlation with collected digital data. Interrogator performance will be tested in areas where multipath is detected.

3.3.2 Flight Testing.

Dynamic range accuracy of the DME/P system will be validated by flight test data collected in FAA aircraft. During flight trials, the aircraft will be tracked by NIKE radar, Laser, and an FAA-built Single Point Optical Ranging Tracker (SPORT). The SPORT incorporates an independent C-band ranging device. Tracker data will be merged to produce a reference position. The tracked reference position will be compared to the collected data to produce PFE and CMN plots. Tracker accuracies are included in appendix B. Performance will be compared to accuracies specified in FAA-STD-022d.

Throughout flight testing, detected video will be observed. Any anomalies will be noted on the flight logs for correlation with digital data.

Interoperability of DME/N with DME/P will be tested during flight tests. Data from the DME/P will be collected while the interrogator is tuned to the field en route DME/N. These data will be compared to required DME/N accuracies.

Flight profiles necessary to evaluate operation of the interrogator include centerline approaches, constant altitude radial approaches, constant altitude partial orbits, full orbits, and curved procedures. The estimated time required to complete the flight testing will be 15 flight hours. This estimate is based on 5 hours for approaches, 6 hours for partial orbits, and 4 hours for the remaining full orbits or curved approaches. A minimum of three of each of the following runs described below will be flown:

a. Approaches

Run #	Azimuth Angle	Elevation Angle
1	0°	Minimum glide path
2	0°	3.0°
3	0°	6.0°

(Approach procedures shall be flown inbound for 20 nmi and terminated at the MLS datum point.)

b. Radial Approaches

Run #	Azimuth Angle	Altitude (Feet)
1	+38°	3000
2	0°	3000
3	-38°	3000

(Radial procedures will be flown inbound from 20 nmi at a specified altitude, and terminated just outside the MLS coverage volume.)

c. Partial Orbits

Run #	Elevation Angle	Altitude (Feet)	Distance From MLS Datum Point (nmi)
1	Minimum glide path		5
2	3.0°	1592	5
3	2.0°	2122	10
4	5.0°	5320	10
5	0.9°	1909	20

(Partial orbit procedures will be flown clockwise and counter clockwise through the MLS coverage volume.)

d. Full Orbit

A 20 nmi full orbit will be flown at an elevation angle of 5 degrees. The purpose of interrogator data collection during an orbit procedure is to observe performance while the aircraft in maneuvering. Orbit testing may be eliminated if curved flightpath testing is performed.

e. Curved Flightpath to Landing

The contract calls for curved flight approaches to be flown from beyond the coverage volume (greater than 22 nmi) starting at an altitude of 3000 feet to various landing radials. This testing will be done pending availability of necessary equipment during flight testing.

4. T&E FLOW DIAGRAM.

Figure 1 indicates the sequence of testing. The subject interrogators must pass each category of testing before proceeding for subsequent evaluation. Initial laboratory tests will be used to verify basic functions. Laboratory and field testing will simultaneously verify other modes of operation. The interrogator may be returned to the factory for modification if necessary. Final acceptance will occur only when all testing has been successfully completed.

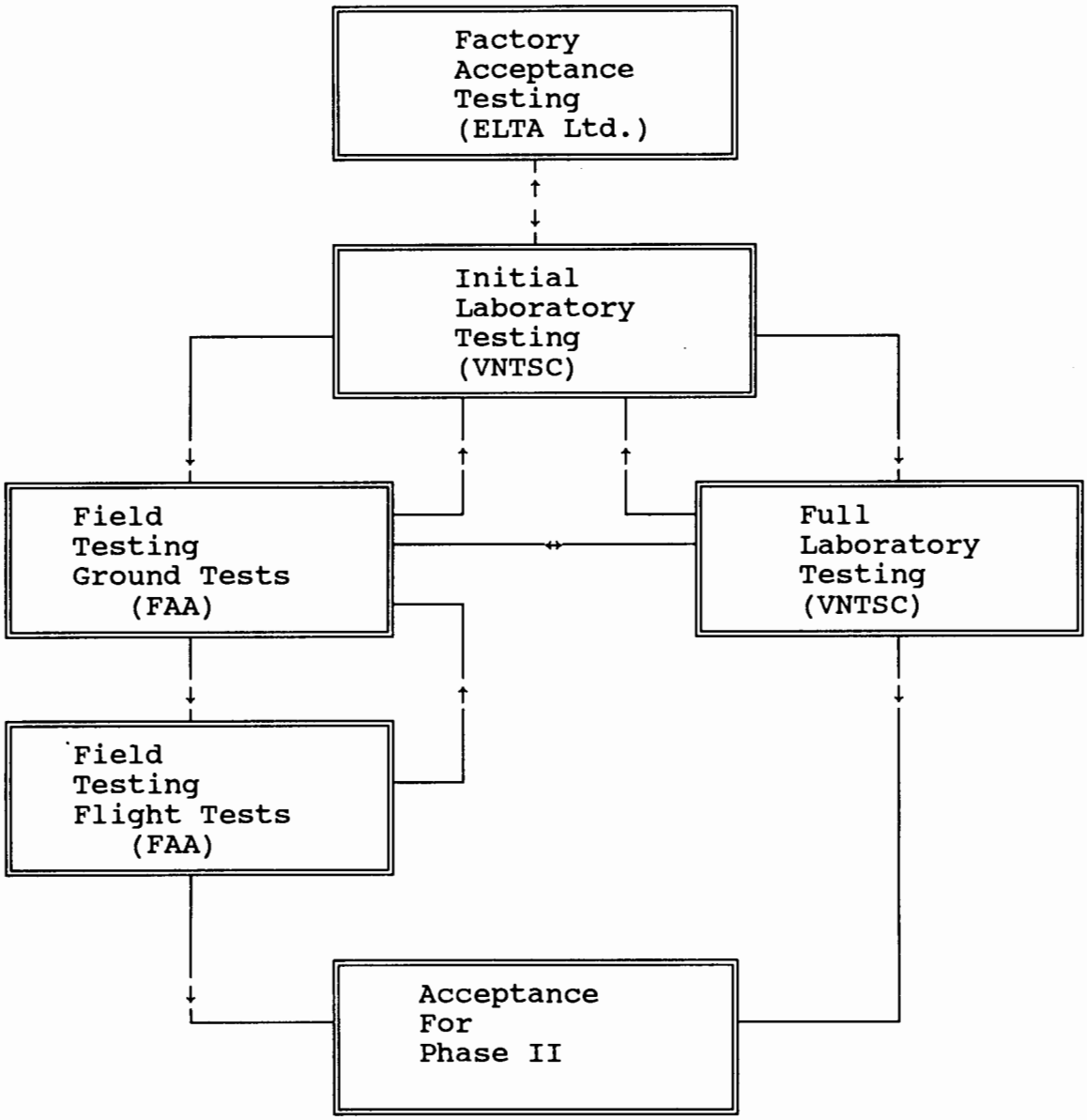

FIGURE 1. T&E FLOW DIAGRAM

5. ORGANIZATIONAL ROLES AND RESPONSIBILITIES.

5.1 VNTSC.

VNTSC is responsible for coordination of all contractual requirements with ELTA Electronics Ltd., coordination of test activities with the FAA Technical Center, and coordination of writing the final report. VNTSC is responsible for the laboratory test plan and laboratory testing.

5.2 FAA TECHNICAL CENTER.

The Airborne Systems Technology Branch, ACD-330, will write the field test plan and coordinate activities at the FAA Technical Center. They will provide the ground test vehicle, test personnel, recorders, and will wire the test pallet for the airborne interrogator. They will collect and reduce data, merge interrogator data with tracker data, and produce range error plots. They will operate and provide data from the SPORT. They will write a field test report to be combined into the final report.

The Flight Test Branch, ACN-360, will provide the aircraft, flight crew, and flight coordination.

The Range Engineering and Analysis Branch, ACN-380, will calibrate and operate the Laser tracker and the NIKE radar, and provide data tapes of tracker data.

5.3 ELTA ELECTRONICS LTD.

ELTA Electronics Ltd. will design, test, and deliver the interrogators for test. They will also build a ground test pallet to be delivered with the interrogators. At least 60 days prior to field tests, ELTA Electronics Ltd. will provide mating connectors for the aircraft installation, along with identification of pins. ELTA Electronics Ltd. is responsible for the factory acceptance test plan.

6. OPERATING AND CONTROL DOCUMENTS.

6.1 GROUND DATA COLLECTION LOG.

Figure 2 illustrates a page from the DME/P Data Collection Log.

6.2 AIRBORNE DATA COLLECTION LOG.

Figure 3 is a depiction of the DME/P Airborne Data Collection Log.

DME/P Ground Data Collection Log

Date __/__/__

Data Technician _____ Interrogator S/N ____
Observers _____ Ground System_____
_____

SURVEY POINT	SURVEY DISTANCE	MAST HEIGHT	SLANT DISTANCE	DME/P RANGE	ERROR	DATA	START TIME	STOP TIME

DME/P Airborne Data Collection Log

Date __/__/__ Flight _____

Subject Pilot _____ Data Technician _____
Safety Pilot _____ Observers _____
_____

Tracking: Laser ___
NIKE ___
Sport ___

Interrogator S/N_____
Ground System _____

TAPE #	RUN #	DESCRIPTION AND COMMENTS	START TIME	STOP TIME

Figure 3. DME/P Ground Data Collection Log

7. INSTRUMENTATION.

7.1 GROUND TEST VEHICLE CONFIGURATION.

Ground test data will be collected in an instrumented test vehicle equipped with a 50 foot telescoping mast, as shown in figure 4. Data will be collected using a standard IBM compatible workstation containing an ARINC 429 monitor. Data will be stored on the computer's hard disk and archived on floppy diskettes.

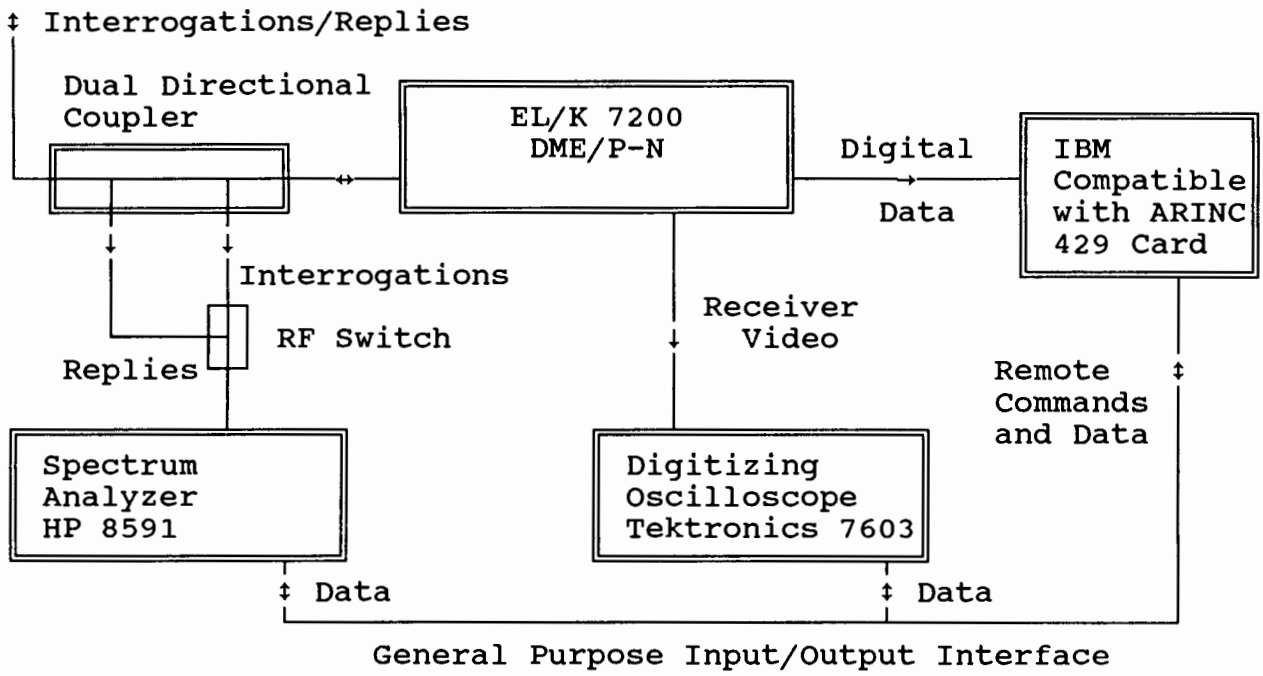

FIGURE 4. GROUND TEST VEHICLE CONFIGURATION

7.2 FLIGHT TEST CONFIGURATION.

The flight test vehicle will be an instrumented Convair 580. Standard DME antenna configurations, as well as necessary power, are available on the aircraft.

Flight test data will be collected using an FAA-built airborne computer. The computer is based on a Motorola 68030 16 MHz microprocessor. Two custom cards interface up to 10 ARINC 429 channels, 4 synchro channels, 16 analog channels, and 32 discrete inputs. A third card provides a 1553 interface capable of monitoring or controlling a 1553 bus system. Collected data will be stored and archived on 44 megabyte tape cartridges.

8. DATA ANALYSIS.

DME/P signal quality is defined in terms of the PFE and CMN. These components of the signal are referred to in the DME/P specifications. Standard filters are used on raw data so these qualities can be separated and measured.

8.1 GROUND TEST DATA.

Each large sample of data recorded will be reduced to a mean and standard deviation value. The range error is defined as the difference between the interrogator range data output and the true range, as measured by the survey data. Range errors at each point will be plotted to ensure satisfactory system performance prior to flight tests.

8.2 FLIGHT TEST DATA.

Full rate data from the interrogator will be collected during flight testing. These data include all data words described in appendix A. All data words will be time tagged as they are output and stored for post-processing. All flight data will be time merged with the tracker data using existing software. The dynamic range error is defined as the difference between the interrogator range data output and the true range; in this case, the tracker range solution. Performance of the interrogator will be assessed by CMN and PFE plots that have tolerance values applied.

9. TEST CONFIGURATION.

9.1 TRACKING FACILITIES.

Time correlated position reference information will be supplied by the Range Engineering and Analysis Branch. They operate the Technical Center tracking facility, which includes a Sylvania Laser tracking system and the NIKE radar tracking system. Accuracy specifications for these systems are included in appendix B.

Additional time correlated position reference information will be supplied by the FAA Technical Center-built SPORT. This tracking system supplies ranging data by way of an integral Motorola Mini-Ranger. Accuracy specifications for this tracker are included in appendix B.

9.2 GROUND NAVIGATION EQUIPMENT.

Two complete Hazeltine 2600 MLS, including DME/P transponders, are presently operating at the FAA Technical Center. These systems were purchased under contract DTFA01-84-C-00008.

E-Systems model 177000-100 DME/P transponders will provide precision replies to the interrogators. These DME/P ground stations meet the ICAO Annex 10 requirements and the FAA-E-2721B accuracy requirements. They operate on channels 113.55 (82Y) and 114.35 (90Y).

A commissioned Tactical Air Navigation (TACAN) transponder is available at the FAA Technical Center. It operates on channel 108.60 (23X).

9.3 ADDITIONAL FACILITIES.

A map of the FAA Technical Center with relevant survey points is included in appendix C. An accurate survey of the facilities and test points have been completed.

10. REVIEWS AND REPORTS.

VNTSC is responsible for producing the final written report on the interrogator.

10.1 FACTORY ACCEPTANCE TESTING.

The results of factory acceptance testing will be reviewed as the testing proceeds. VNTSC personnel will witness factory acceptance testing and will be available to verify operation. A test document will be generated by ELTA Electronics Ltd., and will be supplied with the interrogators.

10.2 LABORATORY ACCEPTANCE TESTING.

Laboratory test review and documentation will occur as specified in the Laboratory Test Plan.

10.3 FIELD ACCEPTANCE TESTING.

The results of field testing will be reviewed as testing proceeds. VNTSC personnel will be available during ground and flight testing. A test document will be generated by FAA Technical Center personnel, and supplied to VNTSC for their use in writing the final report.

11. INTEGRATED SCHEDULE.

11.1 FACTORY ACCEPTANCE TESTING.

Factory acceptance testing will occur before the interrogators are delivered. ELTA Electronics Ltd. personnel will perform this testing. VNTSC test personnel will witness the testing.

11.2 LABORATORY ACCEPTANCE TESTING.

Laboratory testing will take approximately 1 month to complete. This testing will be performed by VNTSC personnel, and will be witnessed by ELTA Electronics Ltd. personnel. Laboratory testing will only occur after factory testing has been successfully completed.

11.3 FIELD ACCEPTANCE TESTING.

Field testing will take approximately 2 weeks to complete. This testing will be performed by FAA Technical Center personnel and will be witnessed by VNTSC and ELTA Electronics Ltd. personnel. Field testing will occur after initial laboratory testing demonstrates that the interrogators are operational. It is not necessary for full laboratory testing to be completed before field testing can begin.

BIBLIOGRAPHY

International Standards, Recommended Practices and Procedures for Air Navigation Services Aeronautical Telecommunications Annex 10, (ICAO Annex 10), November 1985

Manual on Testing of Radio Navigation Aids, Vol III, (ICAO DOC 8071, Draft), Microwave Landing System

Microwave Landing System (MLS) Interoperability and Performance Requirements, (FAA-STD-022d), June 1986

Microwave Landing System (MLS) System Specification, (FAA-E-2721b), June 30, 1989

Minimum Operational Performance Standards (MOPS) for Airborne Interrogator Distance Measuring Equipment (DME) Operation within the Radio Frequency of 960-1215 Megahertz, (RTCA DO-189), September 1985

Precision Airborne Distance Measuring Equipment (DME/P), (ARINC 709A), October 1987

Statement of Work, DME/P contract with ELTA Electronics Ltd., Section C, (DTRS-57-87-R-00048), August, 1990

APPENDIX A

DIGITAL DATA WORDS

Digital data output from the EL/K-7200 will be transmitted in ARINC 429 format according to current ARINC 709A requirements. Additional precision labels have been proposed to ARINC by ELTA Electronics Ltd. to accommodate higher accuracy DME/P words. These additional words are also output in the ARINC 429 data stream. The digital data output from the EL/K-7200 will be as follows:

Data Description	ARINC 429 (HEX)	Label (OCTAL)	Data Rate (Hz)
Frequency Function Selection Word	1D	035	8
MLS BCD Channel Selection Word	1E	036	8
Interrogation Time Report	30	060	Test
Unfiltered Binary Distance Report	31	061	8
Signal Strength Report	32	062	8
Filtered Binary Range Rate Report DME/P	4F	117	40
Filtered BCD Distance Report	81	201	8
Filtered Binary Distance Report DME/N	82	202	8
Filtered Binary Distance Report DME/P	8C	214	40
DME Alpha-Numeric Channel Selection Word	9E	236	8

DIGITAL DATA CONTENT.

The following decode descriptions will be used for decoding typical DME/P data. They are included here for reference.

Bit #	Filtered BCD Range DME/N	Filtered BIN Range DME/N	Filtered BIN Range DME/P	Filtered RNG Rate DME/P	DME Channel Select Word
1	1	1	1	0	1
2	0 Label	0 Label	0 Label	1 Label	0 Label
3	0 HEX 81	0 HEX 82	0 HEX 8C	0 HEX 4F	0 HEX 9F
4	0	0	0	0	1
5	0 OCTAL	0 OCTAL	1 OCTAL	1 OCTAL	1 OCTAL
6	0 201	0 202	1 214	1 117	1 236
7	0	1	0	1	1
8	1	0	0	1	0
9	SDI	SDI	SDI	SDI	SDI
10					
11	Hundredths	Memory	Mode	Mode	Mode
12	of nmi	FLS			
13	(0.01)	Distance	Distance	GIR	GIR
14		(nmi) DME/N	(nmi) DME/P	Antenna	Antenna
15	Tenths	Twos	Twos	Auto	Auto
16	of nmi	Complement	Complement	Memory	Memory
17	(0.1)	Fractional	Fractional	Range	Required
18		Notation	Notation	Rate	State
19	Units	LSB= 1/128 nmi	LSB= 1/2048 nmi	Twos	Channel
20	of nmi			Complement	Number
21	(1)	Full Scale	Full Scale	Fractional	Units
22		511.992188	31.999511	Notation	
23	Tens			LSB=½knot	Channel
24	of nmi			Full Scale	Number
25	(10)			2047.5	Tens
26					
	Hundreds				Hundreds
28	of nmi				Code
29	(100)	Sign	Sign	Sign	
30	SSM	SSM	SSM	SSM	SSM
31					
32	Odd Parity	Odd Parity	Odd Parity	Odd Parity	Odd Parity

Definitions:

Antenna: Interrogation antenna, 1 = upper, 0 = lower
Auto: Antenna selection mode, 1 = forced, 0 = auto selected
Code: Channel Pulse Spacing Code
00: X channel selected
01: Y channel selected
10: W channel selected
11: Z channel selected
FLS: Foreground loop station, 1 if true
GIR: Ground interrogation rate, 1 if true
Memory: Normal track = 0, using memory data = 1

Mode: Four states of DME operation

- 00: IA Mode Memory
- 01: IA Normal Track
- 10: IA and distance less than 7 nmi (No FA detected)
- 11: FA Normal Track

SDI: Source Designation Indicator

- 00: Call All-Input Only
- 01: DME 1
- 10: DME 2
- 11: DME 3

Sign: Numeric sign of data, 1 = negative 2 = positive

Note: Negative distances are not valid

SSM: Sign Statue Matrix

- 00 (BNR): Failure warning, Interrogator has failed its built in test and the data is flagged.
- 00 (BCD): Positive data
- 01: No computed data, Interrogator is not tracking a DME signal and the data is flagged.
- 10: Functional test data
- 11 (BNR): Normal operation
- 11 (BCD): Negative data

APPENDIX B

POSITION REFERENCE SYSTEMS

Three types of position reference systems will be used during interrogator testing. Their ranging accuracies are as follows:

FAA Technical Center Laser

+/- 1 foot (30.5 cm) for ranges less than 5 nmi (9.26 km)
+/- 2 feet (61.0 cm) for ranges greater then 5 nmi but less than 10 nmi (18.52 km)
+/- 5 feet (1.52 m) for ranges greater than 10 nmi

FAA Technical Center NIKE Radar

+/- 9.9 feet (3.25 m) over all ranges

FAA Technical Center Single Point Optical Ranging Tracker

+/- 1.7 feet (0.52 m) for ranges less than 15 nmi (27.27 km)

Appendix C
FAA Technical Center Map

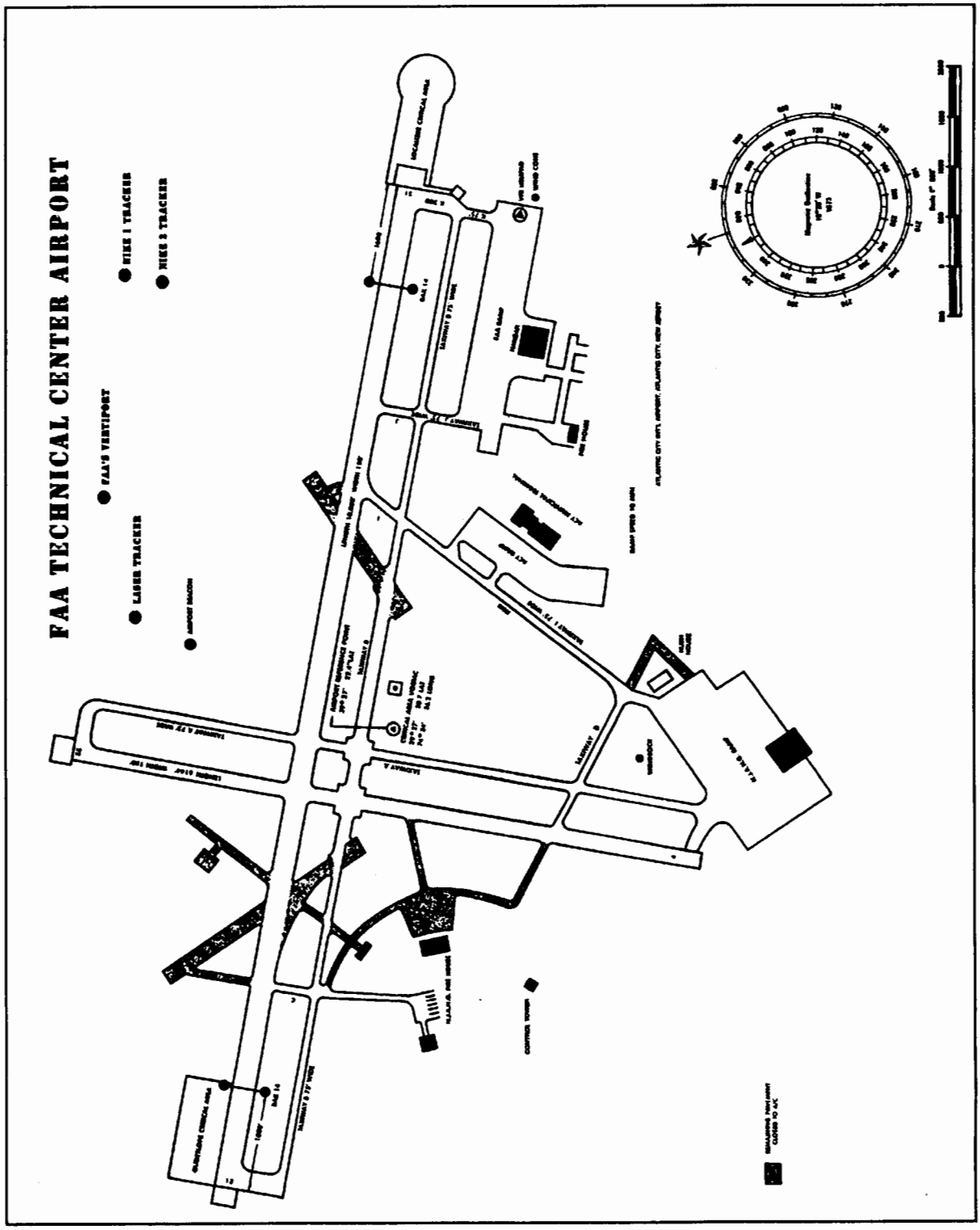
FAA TECHNICAL CENTER AIRPORT
FAA'S VERTIPORT
LASER TRACKER
AIRPORT BEACON
RIEGL 1 TRACKER
RIEGL 2 TRACKER
RUNWAY 9-27 (5000')
RUNWAY 4-22 (5000')
RUNWAY 14-32 (5000')
RUNWAY A
RUNWAY B
RUNWAY C
RUNWAY D
TAXIWAY A
TAXIWAY B
TAXIWAY C
TAXIWAY D
TAXIWAY E
TAXIWAY F
TAXIWAY G
TAXIWAY H
TAXIWAY J
TAXIWAY K
TAXIWAY L
TAXIWAY M
TAXIWAY N
TAXIWAY P
TAXIWAY Q
TAXIWAY R
TAXIWAY S
TAXIWAY T
TAXIWAY U
TAXIWAY V
TAXIWAY W
TAXIWAY X
TAXIWAY Y
TAXIWAY Z
TAXIWAY AA
TAXIWAY AB
TAXIWAY AC
TAXIWAY AD
TAXIWAY AE
TAXIWAY AF
TAXIWAY AG
TAXIWAY AH
TAXIWAY AJ
TAXIWAY AK
TAXIWAY AL
TAXIWAY AM
TAXIWAY AN
TAXIWAY AP
TAXIWAY AQ
TAXIWAY AR
TAXIWAY AS
TAXIWAY AT
TAXIWAY AU
TAXIWAY AV
TAXIWAY AW
TAXIWAY AX
TAXIWAY AY
TAXIWAY AZ
TAXIWAY BA
TAXIWAY BB
TAXIWAY BC
TAXIWAY BD
TAXIWAY BE
TAXIWAY BF
TAXIWAY BG
TAXIWAY BH
TAXIWAY BJ
TAXIWAY BK
TAXIWAY BL
TAXIWAY BM
TAXIWAY BN
TAXIWAY BP
TAXIWAY BQ
TAXIWAY BR
TAXIWAY BS
TAXIWAY BT
TAXIWAY BU
TAXIWAY BV
TAXIWAY BW
TAXIWAY BX
TAXIWAY BY
TAXIWAY BZ
TAXIWAY CA
TAXIWAY CB
TAXIWAY CC
TAXIWAY CD
TAXIWAY CE
TAXIWAY CF
TAXIWAY CG
TAXIWAY CH
TAXIWAY CJ
TAXIWAY CK
TAXIWAY CL
TAXIWAY CM
TAXIWAY CN
TAXIWAY CP
TAXIWAY CQ
TAXIWAY CR
TAXIWAY CS
TAXIWAY CT
TAXIWAY CU
TAXIWAY CV
TAXIWAY CW
TAXIWAY CX
TAXIWAY CY
TAXIWAY CZ
TAXIWAY DA
TAXIWAY DB
TAXIWAY DC
TAXIWAY DD
TAXIWAY DE
TAXIWAY DF
TAXIWAY DG
TAXIWAY DH
TAXIWAY DJ
TAXIWAY DK
TAXIWAY DL
TAXIWAY DM
TAXIWAY DN
TAXIWAY DP
TAXIWAY DQ
TAXIWAY DR
TAXIWAY DS
TAXIWAY DT
TAXIWAY DU
TAXIWAY DV
TAXIWAY DW
TAXIWAY DX
TAXIWAY DY
TAXIWAY DZ
TAXIWAY EA
TAXIWAY EB
TAXIWAY EC
TAXIWAY ED
TAXIWAY EE
TAXIWAY EF
TAXIWAY EG
TAXIWAY EH
TAXIWAY EJ
TAXIWAY EK
TAXIWAY EL
TAXIWAY EM
TAXIWAY EN
TAXIWAY EP
TAXIWAY EQ
TAXIWAY ER
TAXIWAY ES
TAXIWAY ET
TAXIWAY EU
TAXIWAY EV
TAXIWAY EW
TAXIWAY EX
TAXIWAY EY
TAXIWAY EZ
TAXIWAY FA
TAXIWAY FB
TAXIWAY FC
TAXIWAY FD
TAXIWAY FE
TAXIWAY FF
TAXIWAY FG
TAXIWAY FH
TAXIWAY FJ
TAXIWAY FK
TAXIWAY FL
TAXIWAY FM
TAXIWAY FN
TAXIWAY FP
TAXIWAY FQ
TAXIWAY FR
TAXIWAY FS
TAXIWAY FT
TAXIWAY FU
TAXIWAY FV
TAXIWAY FW
TAXIWAY FX
TAXIWAY FY
TAXIWAY FZ
TAXIWAY GA
TAXIWAY GB
TAXIWAY GC
TAXIWAY GD
TAXIWAY GE
TAXIWAY GF
TAXIWAY GG
TAXIWAY GH
TAXIWAY GJ
TAXIWAY GK
TAXIWAY GL
TAXIWAY GM
TAXIWAY GN
TAXIWAY GP
TAXIWAY GQ
TAXIWAY GR
TAXIWAY GS
TAXIWAY GT
TAXIWAY GU
TAXIWAY GV
TAXIWAY GW
TAXIWAY GX
TAXIWAY GY
TAXIWAY GZ
TAXIWAY HA
TAXIWAY HB
TAXIWAY HC
TAXIWAY HD
TAXIWAY HE
TAXIWAY HF
TAXIWAY HG
TAXIWAY HH
TAXIWAY HJ
TAXIWAY HK
TAXIWAY HL
TAXIWAY HM
TAXIWAY HN
TAXIWAY HP
TAXIWAY HQ
TAXIWAY HR
TAXIWAY HS
TAXIWAY HT
TAXIWAY HU
TAXIWAY HV
TAXIWAY HW
TAXIWAY HX
TAXIWAY HY
TAXIWAY HZ
TAXIWAY JA
TAXIWAY JB
TAXIWAY JC
TAXIWAY JD
TAXIWAY JE
TAXIWAY JF
TAXIWAY JG
TAXIWAY JH
TAXIWAY JJ
TAXIWAY JK
TAXIWAY JL
TAXIWAY JM
TAXIWAY JN
TAXIWAY JP
TAXIWAY JQ
TAXIWAY JR
TAXIWAY JS
TAXIWAY JT
TAXIWAY JU
TAXIWAY JV
TAXIWAY JW
TAXIWAY JX
TAXIWAY JY
TAXIWAY JZ
TAXIWAY KA
TAXIWAY KB
TAXIWAY KC
TAXIWAY KD
TAXIWAY KE
TAXIWAY KF
TAXIWAY KG
TAXIWAY KH
TAXIWAY KJ
TAXIWAY KK
TAXIWAY KL
TAXIWAY KM
TAXIWAY KN
TAXIWAY KP
TAXIWAY KQ
TAXIWAY KR
TAXIWAY KS
TAXIWAY KT
TAXIWAY KU
TAXIWAY KV
TAXIWAY KW
TAXIWAY KX
TAXIWAY KY
TAXIWAY KZ
TAXIWAY LA
TAXIWAY LB
TAXIWAY LC
TAXIWAY LD
TAXIWAY LE
TAXIWAY LF
TAXIWAY LG
TAXIWAY LH
TAXIWAY LJ
TAXIWAY LK
TAXIWAY LL
TAXIWAY LM
TAXIWAY LN
TAXIWAY LP
TAXIWAY LQ
TAXIWAY LR
TAXIWAY LS
TAXIWAY LT
TAXIWAY LU
TAXIWAY LV
TAXIWAY LW
TAXIWAY LX
TAXIWAY LY
TAXIWAY LZ
TAXIWAY MA
TAXIWAY MB
TAXIWAY MC
TAXIWAY MD
TAXIWAY ME
TAXIWAY MF
TAXIWAY MG
TAXIWAY MH
TAXIWAY MJ
TAXIWAY MK
TAXIWAY ML
TAXIWAY MM
TAXIWAY MN
TAXIWAY MP
TAXIWAY MQ
TAXIWAY MR
TAXIWAY MS
TAXIWAY MT
TAXIWAY MU
TAXIWAY MV
TAXIWAY MW
TAXIWAY MX
TAXIWAY MY
TAXIWAY MZ
TAXIWAY NA
TAXIWAY NB
TAXIWAY NC
TAXIWAY ND
TAXIWAY NE
TAXIWAY NF
TAXIWAY NG
TAXIWAY NH
TAXIWAY NJ
TAXIWAY NK
TAXIWAY NL
TAXIWAY NM
TAXIWAY NN
TAXIWAY NP
TAXIWAY NQ
TAXIWAY NR
TAXIWAY NS
TAXIWAY NT
TAXIWAY NU
TAXIWAY NV
TAXIWAY NW
TAXIWAY NX
TAXIWAY NY
TAXIWAY NZ
TAXIWAY PA
TAXIWAY PB
TAXIWAY PC
TAXIWAY PD
TAXIWAY PE
TAXIWAY PF
TAXIWAY PG
TAXIWAY PH
TAXIWAY PJ
TAXIWAY PK
TAXIWAY PL
TAXIWAY PM
TAXIWAY PN
TAXIWAY PP
TAXIWAY PQ
TAXIWAY PR
TAXIWAY PS
TAXIWAY PT
TAXIWAY PU
TAXIWAY PV
TAXIWAY PW
TAXIWAY PX
TAXIWAY PY
TAXIWAY PZ
TAXIWAY QA
TAXIWAY QB
TAXIWAY QC
TAXIWAY QD
TAXIWAY QE
TAXIWAY QF
TAXIWAY QG
TAXIWAY QH
TAXIWAY QJ
TAXIWAY QK
TAXIWAY QL
TAXIWAY QM
TAXIWAY QN
TAXIWAY QP
TAXIWAY QQ
TAXIWAY QR
TAXIWAY QS
TAXIWAY QT
TAXIWAY QU
TAXIWAY QV
TAXIWAY QW
TAXIWAY QX
TAXIWAY QY
TAXIWAY QZ
TAXIWAY RA
TAXIWAY RB
TAXIWAY RC
TAXIWAY RD
TAXIWAY RE
TAXIWAY RF
TAXIWAY RG
TAXIWAY RH
TAXIWAY RJ
TAXIWAY RK
TAXIWAY RL
TAXIWAY RM
TAXIWAY RN
TAXIWAY RP
TAXIWAY RQ
TAXIWAY RR
TAXIWAY RS
TAXIWAY RT
TAXIWAY RU
TAXIWAY RV
TAXIWAY RW
TAXIWAY RX
TAXIWAY RY
TAXIWAY RZ
TAXIWAY SA
TAXIWAY SB
TAXIWAY SC
TAXIWAY SD
TAXIWAY SE
TAXIWAY SF
TAXIWAY SG
TAXIWAY SH
TAXIWAY SJ
TAXIWAY SK
TAXIWAY SL
TAXIWAY SM
TAXIWAY SN
TAXIWAY SP
TAXIWAY SQ
TAXIWAY SR
TAXIWAY SS
TAXIWAY ST
TAXIWAY SU
TAXIWAY SV
TAXIWAY SW
TAXIWAY SX
TAXIWAY SY
TAXIWAY SZ
TAXIWAY TA
TAXIWAY TB
TAXIWAY TC
TAXIWAY TD
TAXIWAY TE
TAXIWAY TF
TAXIWAY TG
TAXIWAY TH
TAXIWAY TJ
TAXIWAY TK
TAXIWAY TL
TAXIWAY TM
TAXIWAY TN
TAXIWAY TP
TAXIWAY TQ
TAXIWAY TR
TAXIWAY TS
TAXIWAY TT
TAXIWAY TU
TAXIWAY TV
TAXIWAY TW
TAXIWAY TX
TAXIWAY TY
TAXIWAY TZ
TAXIWAY UA
TAXIWAY UB
TAXIWAY UC
TAXIWAY UD
TAXIWAY UE
TAXIWAY UF
TAXIWAY UG
TAXIWAY UH
TAXIWAY UJ
TAXIWAY UK
TAXIWAY UL
TAXIWAY UM
TAXIWAY UN
TAXIWAY UP
TAXIWAY UQ
TAXIWAY UR
TAXIWAY US
TAXIWAY UT
TAXIWAY UU
TAXIWAY UV
TAXIWAY UW
TAXIWAY UX
TAXIWAY UY
TAXIWAY UZ
TAXIWAY VA
TAXIWAY VB
TAXIWAY VC
TAXIWAY VD
TAXIWAY VE
TAXIWAY VF
TAXIWAY VG
TAXIWAY VH
TAXIWAY VJ
TAXIWAY VK
TAXIWAY VL
TAXIWAY VM
TAXIWAY VN
TAXIWAY VP
TAXIWAY VQ
TAXIWAY VR
TAXIWAY VS
TAXIWAY VT
TAXIWAY VU
TAXIWAY VV
TAXIWAY VW
TAXIWAY VX
TAXIWAY VY
TAXIWAY VZ
TAXIWAY WA
TAXIWAY WB
TAXIWAY WC
TAXIWAY WD
TAXIWAY WE
TAXIWAY WF
TAXIWAY WG
TAXIWAY WH
TAXIWAY WJ
TAXIWAY WK
TAXIWAY WL
TAXIWAY WM
TAXIWAY WN
TAXIWAY WP
TAXIWAY WQ
TAXIWAY WR
TAXIWAY WS
TAXIWAY WT
TAXIWAY WU
TAXIWAY WV
TAXIWAY WW
TAXIWAY WX
TAXIWAY WY
TAXIWAY WZ
TAXIWAY XA
TAXIWAY XB
TAXIWAY XC
TAXIWAY XD
TAXIWAY XE
TAXIWAY XF
TAXIWAY XG
TAXIWAY XH
TAXIWAY XJ
TAXIWAY XK
TAXIWAY XL
TAXIWAY XM
TAXIWAY XN
TAXIWAY XP
TAXIWAY XQ
TAXIWAY XR
TAXIWAY XS
TAXIWAY XT
TAXIWAY XU
TAXIWAY XV
TAXIWAY XW
TAXIWAY XX
TAXIWAY XY
TAXIWAY XZ
TAXIWAY YA
TAXIWAY YB
TAXIWAY YC
TAXIWAY YD
TAXIWAY YE
TAXIWAY YF
TAXIWAY YG
TAXIWAY YH
TAXIWAY YJ
TAXIWAY YK
TAXIWAY YL
TAXIWAY YM
TAXIWAY YN
TAXIWAY YP
TAXIWAY YQ
TAXIWAY YR
TAXIWAY YS
TAXIWAY YT
TAXIWAY YU
TAXIWAY YV
TAXIWAY YW
TAXIWAY YX
TAXIWAY YY
TAXIWAY YZ
TAXIWAY ZA
TAXIWAY ZB
TAXIWAY ZC
TAXIWAY ZD
TAXIWAY ZE
TAXIWAY ZF
TAXIWAY ZG
TAXIWAY ZH
TAXIWAY ZJ
TAXIWAY ZK
TAXIWAY ZL
TAXIWAY ZM
TAXIWAY ZN
TAXIWAY ZP
TAXIWAY ZQ
TAXIWAY ZR
TAXIWAY ZS
TAXIWAY ZT
TAXIWAY ZU
TAXIWAY ZV
TAXIWAY ZW
TAXIWAY ZX
TAXIWAY ZY
TAXIWAY ZZ
CONTROL TOWER
FAA HANGAR
WIND CONE
FAA CAMP
FIRE PUMPS
FIRE HOUSE
HANGAR
HANGAR
HANGAR