FEDERAL AVIATION ADMINISTRATION
OCT 11 1996
TECHNICAL LIBRARY
ATLANTIC CITY

New Generation Runway Visual Range (RVR) Final Operational Test and Evaluation Report: Volume III

COPY 2

William Benner
Thomas Carty

AVAILABLE IN ELECTRONIC FORMAT

July 1996

DOT/FAA/CT-TN95/32-1I1

Document is on file at the William J. Hughes Technical Center Library, Atlantic City International Airport, NJ 08405

U.S. Department of Transportation
Federal Aviation Administration

William J. HughesTechnical Center
Atlantic City International Airport, NJ 08405

DOT/FAA
CT-TN
95/32-III
c. 2

FAA
00016063
DOT/FAA
CT-TN
95/32-III
c. 2

Benner, William, et al.
New generation runway visual range (RVR) final operational test and evaluation

FAA
TECHNICAL CENTER
Atlantic City, N.J.

NOTICE

This document is disseminated under the sponsorship of the U.S. Department of Transportation in the interest of information exchange. The United States Government assumes no liability for the contents or use thereof.

The United States Government does not endorse products or manufacturers. Trade or manufacturers' names appear herein sorery because they are considered essential to the objective of this report.

Technical Report Documentation Page

1 Report No. DOTIFAAICT-TN95132-m	2. Accession No.	3. Recipient's Catalog No.
4. Title and Subtitle New Generation Runway Visual Range (RVR) Final Operational Test and Evaluation Report: Volume m		5. Report Date July 1996 6. Pertormmg Code ACW-200B
7. Author (s) William Benner, Thomas Carty; Michael Jones, Raytheon Service Co.		8. Performing Organization Report No. DOTIFAAICT-TN95/32-m
9. Performing Name and Address US. Department of Transportation Federal Aviation Administration Technical Center Atlantic City International Airport, NJ. 08405		10. Work Unit No. (TRAIS) II Contract or Grant No.
12. sponsoring Agency Name and Address US. Department of Transportation Federal Aviation Administration Technical Center Atlantic City International Airport, NJ. 08405		13. Type of Report and Period Covered Technical Note March 1992 - June 1994 14. sponsoring Agency

15. Supplementary Notes
This effort was performed in cooperation with FAA Technical Center (ACW-200B) personnel and project personnel from Raytheon Service Company in Pleasantville, New Jersey.

16. **Abstract**

This report summarizes Operational Test and Evaluation (OT&E) activities for the New Generation Runway Visual Range (RVR) system. Testing consisted of an initial OT&E, seven individual retests and several specialized tests. DOTIFAAICT-TN92137 provides results of the initial OT&E conducted in March 1992. This document summarizes results of seven retests as well as specialized tests conducted from August 1992 through June 1994.

The purpose and intent of OT&E was to verify RVR National Airspace Requirements (NAS) and to verify the operational effectiveness and suitability of the RVR within the NAS environment

At the completion of the retest and specialized test efforts results indicated that the most significant sensor and system problems had been resolved via permanent design changes as well as interim "work-arounds." It was recommended that the RVR system be deployed nationally under the following conditions:

a. Additional data be obtained indicating RVR performance during Category IIIb visibility; and

b. Problems currently having interim work-around solutions be resolved with permanent corrections.

This volume contains appendices H through K referenced in Volume l.

17. **Key** Words New Generation Runway Visual Range (RVR) Specialized Tests Look-Down Visibility Sensor Modification	18. Distribution Statement Document is on file at the Technical Center Library, Atlantic City International Airport, NJ 08405

19. Security Classif. (of this report) Unclassified	20. Security Classif. (of this page) Unclassified	21 No. of Pages 270	22. Price

Form DOT F 1700.7 (8-72) Reproduction of completed page authorized

APPENDIX H
Specialized Test 1
COLD REGIONS RESEARCH AND ENGINEERING LABORATORIES
Blowing Precipitation and Category IIIb Evaluation

DRAFT

COLD REGIONS RESEARCH ENGINEERING LABORATORIES TESTS WITH THE RVR LOOK-DOWN VISIBILITY SENSOR

MAY 1995

Prepared by:

Weather/Primary Radar Division ACW-200B
Federal Aviation Administration Technical Center
Atlantic City International Airport
Atlantic City, NJ 08405

EXECUTIVE SUMMARY

This report will detail testing and results conducted on the New Generation Runway Visual Range (RVR) Visibility Sensor (VB) at the Cold Regions Research and Engineering Laboratories (CRREL). Extensive testing was performed on the sensor over a six week period from JUly 1993 to August 1993. Comments and conclusions for each test as well as ACW-200B recommendations and conclusions are detailed within the remainder of the report.

Prior to the CRREL test, significant problems were observed in RVR sensor performance during inclement weather conditions. These problems lead to serious degradation in the operation of the RVR system. The problems included the following:

- The need to recalibrate the VS to account for specific weather events such as fog and snow;
- VS shutdowns during precipitation; and
- Accuracy deficiencies due to icing and snow clogging of the VS window; and discrepancies in RVR readings during non-precipitation related low-visibility conditions.

Initial modifications made in response to these problems were unsuccessful in SUbstantially improving sensor performance. As a result, additional design changes related to the sensor's hardware and firmware were made to correct the known deficiencies.

CRREL testing was designed to assess the effectiveness of these changes by simUlating the weather conditions that occurred when problems were noted, and observing sensor performance. For example, since snow clogging and icing of the VS window was a known problem, various simUlations of blowing snow conditions were produced to evaluate design changes and obtain additional data on the problem.

Most significant in the hardware changes was the reorientation of the sensors optics. Instead of pointing parallel to the ground, a new sensor was created that has optics pointing towards the ground. This modification was made primarily to reduce the amount of precipitation that could impinge on the VS window. The change in optics was also designed to eliminate the need for recalibrating the sensor for fog and snow events.

In addition to modifications made before CRREL testing, significant design changes were made to the VS during CRREL tests. Due to the number and magnitude of these modifications, CRREL testing was considered specialized and more developmental than normal Operational Test and Evaluation activities.

Several limitations were noted in the ability of test scenarios to reproduce actual weather conditions. Also, several unanticipated problems were noted in the performance of the new sensor. These limitations and problems are discussed within the remainder of the report. Despite the limitations and problems, the CRREL test effort was extremely valuable in determining the optimal hardware and software configuration of the sensor. For the RVR system, this included a visibility sensor with optics pointing downwards, hence the need for the Look-Down Visibility Sensor was confirmed.

TABLE OF CONTENTS

EXECUTIVE SUMMARY . i

1.0 INTRODUCTION 1
1.1 PURPOSE 1
1.2 SCOPE 1
1.3 BACKGROUND. 1
1.3.1 Cold Regions Research and Engineering Laboratories 1
1.3.2 Blowing Precipitation Problems with the Original VS 2
1.3.3 RVR Visibility Sensor Modifications. 2

2.0 REFERENCE DOCUMENTS. 5

3.0 SYSTEM DESCRIPTION 5
3.1 MISSION REVIEW 5
3.2 TEST SYSTEM CONFIGURATION. 5
3.2.1 VS Hardware. 7
3.2.1.1 VS Hood Heater Prototypes 7
3.2.1.1.1 Half-Size Heating Element. 7
3.2.1.1.2 Full-Size Heating Element. 7
3.2.1.1.3 End-Loaded Heating Element. 7
3.2.2 VS SIE Software. 8
3.3 INTERFACES. 9

4.0 TEST AND EVALUATION DESCRIPTION. 9
4.1 TEST SCHEDULE AND LOCATIONS. 9
4.2 PARTICIPANTS. 10
4.3 TEST LABORATORIES AND EQUIPMENT. 10
4.4 TEST OBJECTIVES/CRITERIA. 10
4.5 TEST DESCRIPTIONS. 11
4.5.1 Volume Density Baseline Determination 11
4.5.2 Window contamination and Clogging. 12
4.5.2.1 Spray Mist Tests. 12
4.5.2.2 Blowing Snow Tests 12
4.5.2.2.2 Wind Tunnel Type. 13
4.5.2.2.3 Direction of Snow Spray. 13
4.5.2.2.4 Snow Rate. 13
4.5.2.2.5 Snow Blower Type. 13
4.5.2.2.6 Chamber Laboratory 16
4.5.3 Transmitter & Receiver Temperature Difference Measurement. 16
4.5.4 De-ice Heater Control Performance 17
4.5.5 Low Visibility Performance 17
4.6 DATA COLLECTION AND ANALYSIS METHOD. 19

5.0 TEST CONDUCT. 19
5.1 VOLUME DENSITY BASELINE DETERMINATION 19
5.1.1 Volume Density Test 1. 20
5.1.1.2 Conclusion/Comments. 20
5.1.2 Volume Density Test 2. 22

5.1.2.2 Conclusion/Comments. 22
5.1.3 Volume Density Test 3. 22
5.1.3.2 Conclusion/Comments. 25
5.2 WINDOW CONTAMINATION AND CLOGGING. 25
5.2.1 Spray Mist Test 1. 25
5.2.1.1 Conclusion/Comments 27
5.2.2 Spray Mist Test 2 27
5.2.2.1 Conc1usion/Comments.. 27
5.2.3 Spray Mist Test 3 29
5.2.3.1 Conclusion/Comments. . . . 29
5.2.4 Spray Mist Test 4. 29
5.2.4.1 Conclusion/Comments 29
5.2.5 Blowing Snow Equipment and Setup 29
5.2.6 Horizontal Blowing Snow Test. 31
5.2.6.1 Conclusion/Comments 31
5.2.7 Upward Blowing Snow Test 31
5.2.7.1 Conclusion/Comments 33
5.2.8 Upward Blowing Snow with Calibration Plate Test. . 33
5.2.8.1 Conclusion/Comments 33
5.2.9 Angular Blowing Snow Tests 35
5.2.9.1 Conclusion/Comments 35
5.2.10 Blowing Snow with Calibration Plate Test 35
5.2.11 High Intensity Blowing Snow Tests 50
50
5.3 TRANSMITTER AND RECEIVER TEMPERATURE DIFFERENCE MEASUREMENTS. 50
5.3.1 TX RX Temp Diff Test 1 50
5.3.1.1. Conc1usion/Comments. 56
5.3.2 TX RX Temp Diff Test 2. 56
5.3.2.1 Conclusion/Comments. 56
5.4 DE-ICE HEATER CONTROL TESTS. 64
5.4.1 De-Ice Heater Test 1. 64
5.4.1.1 Performance with De-Ice Heater. . . . 64
5.4.1.1.1 Conclusion/Comments 64
5.4.1.2 Performance without De-Ice Heater . . . 66
5.4.1.2.1 Conclusion/Comments 66
5.4.2 De-Ice Heater Test 2 68
5.4.2.1 Performance with De-Ice Heater. . . . 68
5.4.2.1.1 Conclusion/Comments. . . . 68
5.4.2.2 Performance without De-Ice Heater. 68
5.4.2.2.1 Conclusion/Comments. . . . 70
5.5 Low Visibility Performance. 70
5.5.1 Fog Test 1. 70
5.5.1.1. Conclusion/Comments. 71
5.5.2 Fog Test 2 71
5.5.2.1 Conclusion/Comments . . . 73
5.5.3 Fog Test 3 73
5.5.3.1 Conclusion/Comments 73
5.5.4 Fog Test 4 & 5 75
5.5.4.1 Conclusion/Comments . . . 75

6.0 TEST LIMITATIONS AND PROBLEMS . 78

7.0 CONCLUSIONS. 79

8.0 RECOMMENDATIONS. 79

PHOTOS

Photo 1. Look-Out VS 3
Photo 2. Visibility Sensor Snow Clogging 4
Photo 3. Cylindrical Wind Tunnel 14
Photo 4. Rectangular Wind Tunnel with LKDWN VS 15
Photo 5. Ice Conglomerate Formation 30
Photo 6. Look Down VS Snow Clog lIthin" at Center . . . 67
Photo 7. ALS lIDonut Cloglll 67

FIGURES

Figure 1. Look-Down VS Components 6
Figure 2. LKDWN VS Volume Density Test 1 . . . 21
Figure 3. LKDWN VS Volume Density Test 2 23
Figure 4. LKDWN VS Volume Density Test 3 . . . 24
Figure 5. Spray Mist Test 26
Figure 6. Spray Mist Test 28
Figure 7. Horizontal Blowing Snow Test 32
Figure 8. Upward Blowing Snow Test 34
Figure 9. Upward Blowing Snow Test *wi* Calibration Plate 34
Figure 10. LKDWN VS Blowing snow Test at OO(RX) . 36
Figure 11. LKOUT VS Blowing snow Test at OO(RX) 36
Figure 12. LKDWN VS Blowing Snow Test at 22.5°(RX) 37
Figure 13. LKOUT VS Blowing Snow Test at 22.5°(RX) 37
Figure 14. LKDWN VS Blowing Snow Test at 45° (RX) 38
Figure 15. LKOUT VS Blowing Snow Test at 45° (RX) 38
Figure 16. LKDWN VS Blowing Snow Test at 67.5°(RX) 39
Figure 17. LKOUT VS Blowing Snow Test at 67.5°(RX) 39
Figure 18. LKDWN VS Blowing Snow Test at 90° (RX) 40
Figure 19. LKOUT VS Blowing Snow Test at 90° (RX) . . . 40
Figure 20. LKDWN VS Blowing snow Test at 112.5°(RX) 41
Figure 21. LKOUT VS Blowing snow Test at 112.5°(RX) 41
Figure 22. LKDWN VS Blowing Snow Test at 135°(RX) 42
Figure 23. LKOUT VS Blowing snow Test at 135°(RX) 42
Figure 24. LKDWN VS Blowing Snow Test at 157.5°(RX) 43
Figure 25. LKOUT VS Blowing Snow Test at 157.5°(RX) 43
Figure 26. LKDWN VS Blowing snow Test at 180° (RX) 44
Figure 27. LKOUT VS Blowing snow Test at 180° (RX) 44
Figure 28. LKDWN VB Blowing snow Test at OO(TX) 45
Figure 29. LKDWN VB Blowing Snow Test at 22.5°(TX) 45
Figure 30. LKDWN VS Blowing Snow Test at 45°(TX) 46
Figure 31. LKDWN VB Blowing Snow Test at 67.5°(TX) 46
Figure 32. LKDWN VS Blowing Snow Test at *90°* (TX) 47
Figure 33. LKDWN VB Blowing Snow Test at 112.5°(TX) 47
Figure 34. LKDWN VB Blowing Snow Test at 135°(TX) 48
Figure 35. LKDWN VB Blowing Snow Test at 157.5°(TX) 48
Figure 36. LKDWN VS Blowing Snow Test at 180° (TX) 49
Figure 37. LKDWN VS Blowing Snow Test *wlCal* Plate(TX) at *112.5°* 51
Figure 38. LKDWN VS Blowing Snow Test *wlCal* Plate(TX) at *135°* . 52
Figure 39. Blowing Snow Tests w/ Snow Gun at 90° 52

Figure 40. Blowing Snow Tests w/ Snow Gun at 90° 52
Figure 41. Blowing Snow Test w/ Snow Gun(RX & TX) at 0° 53
Figure 42. Blowing Snow Test w/ Snow Gun(TX) at 45° 53
Figure 43. Blowing Snow Test w/ Snow Gun(RX) at -45° 54
Figure 44. Blowing Snow Test w/ Snow Gun(TX) at 45° 54
Figure 45. Blowing Snow Test w/ Snow Gun(TX) at 45° 55
Figure 46. TX RX Temp Diff Test 1 at 0° 57
Figure 47. TX RX Temp Diff Test 1 at 22.5°(RX Closer to Fan) 57
Figure 48. TX RX Temp Diff Test 1 at 45°(RX Closer to Fan) 58
Figure 49. TX RX Temp Diff Test 1 at 67.5°(RX Closer to Fan) 58
Figure 50. TX RX Temp Diff Test 1 at 90° (RX Closer to Fan) 59
Figure 51. TX RX Temp Diff Test 1 at OO(TX Closer to Fan) 59
Figure 52. TX RX Temp Diff Test 1 at 22.5°(TX Closer to Fan) 60
Figure 53. TX RX Temp Diff Test 1 at 45°(TX Closer to Fan) 60
Figure 54. TX RX Temp Diff Test 1 at 67.5°(TX Closer to Fan) 61
Figure 55. TX RX Temp Diff Test 1 at 90° (TX Closer to Fan) 61
Figure 56. TX RX Temp Diff Test 2 62
Figure 57. TX RX Temp Diff GRAPH 63
Figure 58. De-Ice Heater Test 1 at 135°(TX) 65
Figure 59. De-Ice Heater Test 2 at 135° (TX) 69
Figure 60. Fog with Snow Gun Test 1-3 72
Figure 61. Fog with Snow Gun Test 4 76
Figure 62. Fog with Snow Gun Test 5 77

TABLES

TABLE 1 VS Heating Element Prototypes 7
TABLE 2 Software Versions-Test Period: 7/19-7/23 1993 8
TABLE 3 Software Versions-Test Period: 8/3-8/5 1993 8
TABLE 4 Software Versions-Test Period: 8/5-8/6 1993 8
TABLE 5 Software Versions-Test Period: 8/17-8/26 1993 . . . 9
TABLE 6 VS DISTANCE FROM SNOW BLOWER 31
TABLE 7 FOG ACTIVATION/DEACTIVATION THRESHOLDS 73
TABLE 8 VISIBILITY SENSOR EXTINCTION COEFFICIENT COMPARISON . . 74

1.0 INTRODUCTION.

This report will detail testing activities and results of an evaluation performed on the New Generation Runway Visual Range (RVR) Look-Down Visibility Sensor (VS). The evaluation occurred during a six week period at the Cold Regions Research and Engineering Laboratories (CRREL) in Hanover, New Hampshire. During the period which commenced in July 1993 and ended in August 1993, actual testing was conducted in three separate sessions each lasting approximately one week. This report was developed in accordance with FAA-STD-024B and FAA-ORDER-1810.4B.

1.1 PURPOSE.

The purpose of this report is to provide results of CRREL tests performed on the Look-Down VS. A discussion of the test scenarios, their limitations, as well as recommendations and conclusions is also provided in the report.

1.2 SCOPE.

This report will detail sensor configuration, equipment, test procedures and results of the Look-Down VS evaluation. Diagrams are provided for each test scenario to supplement discussions in the test descriptions. Conclusions and comments are offered following the conduct of each test. Final recommendations are provided at the end of the report.

Although CRREL tests also included evaluations of the original Look-Out VS and the Ambient Light Sensor (ALS), this report will focus on the new sensor which was first released during the CRREL testing period. Commonly referred to by the direction of its optics, the new sensor was named the Look-Down Visibility Sensor. Paragraph 1.3.2 discusses the rational for changing the hardware design of the Visibility Sensor from the Look-Out to Look-Down configuration.

1.3 BACKGROUND.

1.3.1 Cold Regions Research and Engineering Laboratories.

The Cold Regions Research and Engineering Laboratories is a complex owned by the U.S Army and located in Hanover, New Hampshire. It has the ability to simUlate various types of cold weather phenomenon including high winds, snow, freezing rain, and sub-zero temperatures. The complex is primarily composed of laboratories varying in size and capability. Because of the laboratory capabilities and experience of its personnel, CRREL was selected as a site for evaluating performance of RVR Visibility Sensors.

1.3.2 Blowing Precipitation Problems with the Original VS.

The original RVR visibility sensor, commonly referred to as the Look-out VS, utilized transmitter and receiver components (ref. photo 1) that were oriented parallel to the ground. This design configuration had lead to problems in sensor performance during precipitation events.

For example, the visibility sensors clogged severely during three snow events in March and April of 1992 at st. Johns, Newfoundland. In two of the events, whiteout conditions existed with winds reaching 30 knots and temperatures below 15° F. In the third event, temperatures were just below freezing and clogging occurred after a long period of blowing snow.

It was noted during the events, that snow accumulated on unheated areas on the underside of the sensor hood (e.g., ref. photo 2). Additionally, snow clogging occurred on the sensor window. Because the sensor uses forward scatter technology, light impediments (e.g. VS clogging) to the scatter volume can result in higher than actual RVR readings.

In other field tests, blowing precipitation produced large window contamination signals in the Look-out VS and the ALS. These window signals, which are actually voltage levels representing the amount of debris/precipitation on the window, were often large enough to exceed sensor software alarm limits and as a result, sensor and system shutdowns occurred for extended periods.

1.3.3 RVR Visibility Sensor Modifications.

Following a review of RVR VS performance at st. Johns and reports of precipitation related outages at other test sites, it was decided that modifications to the sensor heads would be required to correct the observed problems. For risk reduction purposes, a dual path approach was taken in correcting the problems.

The first path consisted of software and heater modifications to the Look-Out VS. These modifications were intended to make the sensor more immune to the effects of precipitation striking the window and the effect of snow collecting under the sensor hood.

The second path consisted of creating a new sensor with heads oriented downwards (e.g., Look-Down VS) instead of parallel to the ground. Sensor modifications also included an extended hood with conformally designed heaters. The Look-Down orientation was intended to prevent precipitation from reaching window and the underside of the sensor hood.

An added benefit of the look-down configuration was that the sensor head position could be chosen so to allow for the same calibration during snow and fog events.

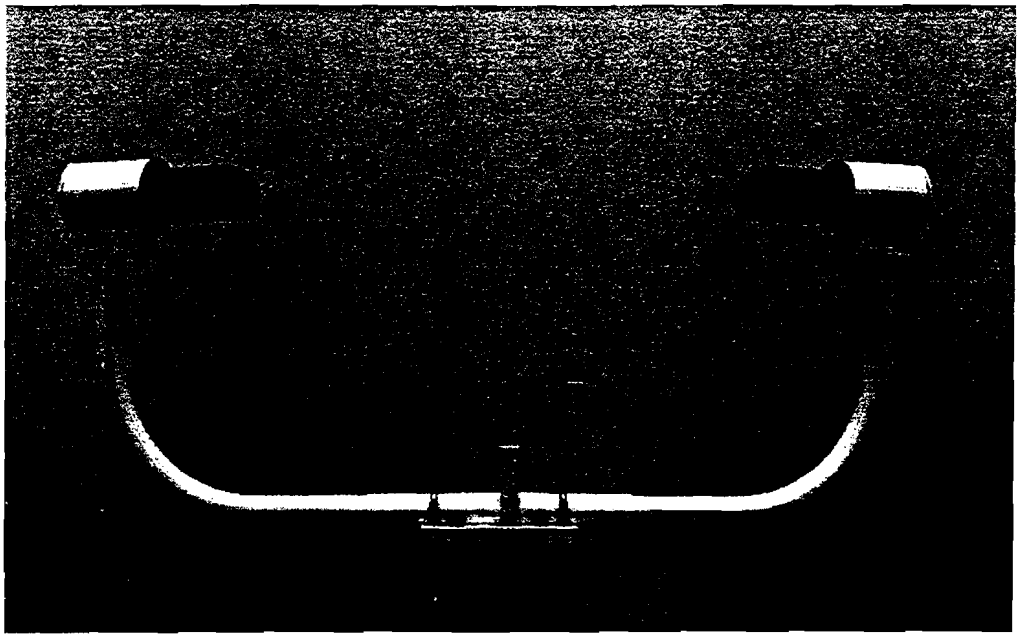

PHOTO 1. LOOK-OUT VISIBILITY SENSOR

PHOTO 2. VISIBILITY SENSOR SNOW CLOGGING

Further analysis performed by the Volpe National Transportation Systems Center revealed that the optimum sensor angle should be 42° (ref. figure 1).

2.0 REFERENCE DOCUMENTS.

The following documents were used in preparing this report:

FAA-STD-024B August 22, 1994	Preparation of Test and Evaluation Documentation
FAA-OR-1810.4B October 22, 1994	FAA NAS Test and Evaluation Policy

3.0 SYSTEM DESCRIPTION.

3.1 MISSION REVIEW.

The New Generation Runway Visual Range (RVR) is designed to replace transmissometer systems (e.g. Tasker 400, 500) currently in use at u.S. airports. It will provide a measurement of runway visual range at specific points along a precision runway in support of instrument landings during Category I, II, IIIa/b visibility conditions (ref. specification FAA-E-2772).

The functions of the RVR include determination of the following:

- Atmospheric scattering coefficients,
- Ambient light intensity, and
- Runway light intensity.

This information is processed to yield distances that a pilot can expect to see along the departure or approach path of a runway. The New Generation RVR equipment will decrease the maintenance load and installation difficulties associated with current RVR system designs. Future expansion capabilities will be easier and less costly.

3.2 TEST SYSTEM CONFIGURATION.

The following RVR components were used in the system configuration:

- VS (2). One look-down and one look-out configuration; Installed inside chamber laboratory;
- ALS (1). Installed inside chamber laboratory;
- Data Processing Unit (1). Installed outside chamber laboratory; and
- Sensor Interface Electronics (SIE) Enclosure (3). Installed inside chamber laboratory;

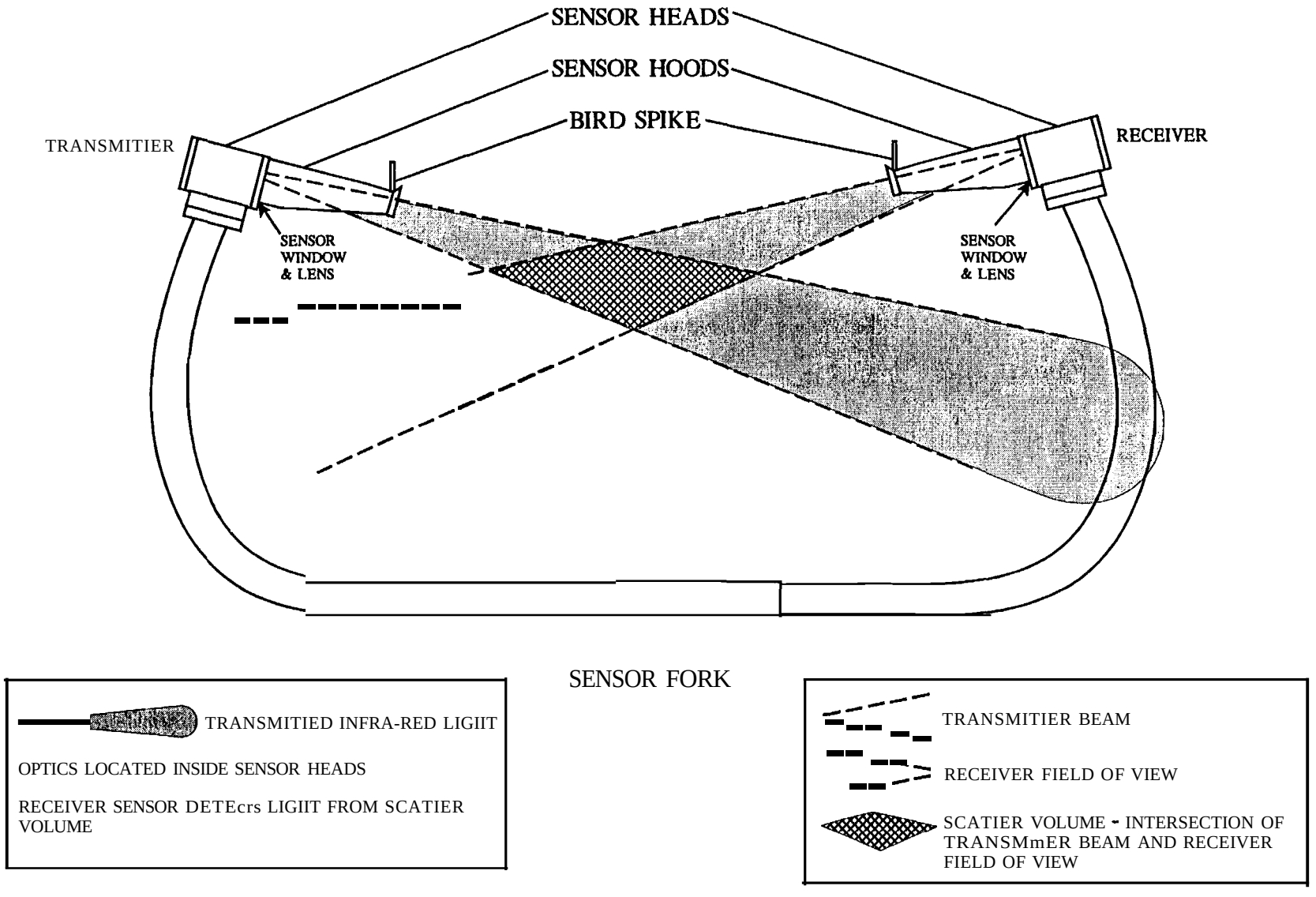

Figure 1. Look-Down Visibility Sensor Components

3.2.1 VS Hardware.

As mentioned, CRREL testing was essentially an evaluation of RVR sensor components, and in particular the VS. Several prototypes of the VS were evaluated. Although the primary distinction in prototypes was sensor orientation (i.e., look-down, look-out), hood heaters varying in size and capability were combined with these orientations. Table 1 identifies VS hardware components and the dates used.

TABLE 1 VS Heating Element Prototypes

COMPONENT/HARDWARE	TEST PERIOD
Look-Out VS/50 watt heater "half-size" heating element	July 19 - July 26, 1993
Look-Out VS/85 watt heater "full-size" heating element	August 2 - August 26, 1993
Look-Down[1] VS/150 watt heater "end-loaded" heating element	August 5 - August 26, 1993

3.2.1.1 VS Hood Heater Prototypes.

The following subparagraphs provide a brief explanation of several hood heating prototypes used during VS testing.

3.2.1.1.1 Half-Size Heating Element.

This refers to a heater in the form of a blanket that covered approximately half of the sensor hood. The heater was located on the underside of the hood.

3.2.1.1.2 Full-Size Heating Element.

This refers to a heater *in* the form of a blanket that covered the entire hood except for the flange area (ref. figure 1). The heater was located on the underside of the hood.

3.2.1.1.3 End-Loaded Heating Element.

This refers to a full-size heating element that was designed to output more heat on the blanket portions furthest away from the sensor window.

---

1 Although the addition of a bird spike (ref. figure 1) was incorporated in the design of the Look-Down VS, this component was not used in the CRREL test

3.2.2 VS SIE Software.

various modifications were made to the VS SIE software throughout testing. Modifications ranged from the use of different parameter gain values to algorithms designed to aid the sensor in compensating for the effects of precipitation on the window. Tables 2 through 5 detail the software versions and RVR components used for the identified testing periods.

TABLE 2 Software Versions-Test Period: 7/19-7/23 1993

COMPONENT	SOFTWARE VERSION
Maintenance Processing Unit	0706936025
Product Processing Unit A	0701935023
Product processing Unit B	0701935023
Visibility Sensor 01	2.3B 7/20/93[2]
Ambient Lighting Sensor	2.3B 7/20/93[2]

TABLE 3 Software Versions-Test Period: 8/3-8/5 1993

COMPONENT	SOFTWARE VERSION
Maintenance Processing Unit	0706936025
Product Processing unit A	0701935023
Product Processing Unit B	0701935023
Visibility Sensor 01	2.3C 7/10/93[2]
Ambient Lighting Sensor	2.3B 7/14/93[2]

TABLE 4 Software Versions-Test Period: 8/5-8/6 1993

COMPONENT	SOFTWARE VERSION
Maintenance Processing unit	0802936026
Product Processing Unit A	0802935024
Product Processing unit B	0802935024
Visibility Sensor 01 Look-Down configuration	___[3]
Ambient Lighting Sensor	not installed

2 EEPROM's used for VS & ALS Sensor Interface Electronics were non-production version and hence, did not complete Software Qualification Tests

3 Software for the Look-Down VS was also an engineering release. No version number was obtained.

TABLE 5 Software Versions-Test Period: 8/17-8/26 1993

COMPONENT	SOFTWARE VERSION
Maintenance Processing Unit	0802936026
Product Processing Unit A	0802935024
Product Processing unit B	0802935024
Visibility Sensor 01 Look-Down configuration	0811932024
Visibility Sensor 02 Look-Out Configuration	0811932024
Ambient Lighting Sensor	0604933023

In the past, RVR system alarms occurring during data collection periods caused the loss of and misrepresentation of data. To prevent these conflicts from affecting a clear understanding of the test results, all alarm limits were disabled before testing. This prevented the system from reporting alarms caused by parameters exceeding their limits. To compensate for this, parameters that would have normally caused alarms and/or sensor shutdown are noted in this report.

3.3 INTERFACES.

With the exception of the External User and Maintenance Data Terminal (MDT), no other NAS interfaces were required for testing. The External User interface was used to export sensor data such as extinction coefficient, window contamination, etc., to a data collection computer. The MDT interface was used monitor RVR system and sensor parameters such as heater status, window signal readings, etc., during testing.

4.0 TEST AND EVALUATION DESCRIPTION.

4.1 TEST SCHEDULE AND LOCATIONS.

Testing was performed at CRREL in Hanover, New Hampshire during the following periods: July 19 to July 26, 1993; August 2 to August 6, 1993 and August 16 to August 23, 1993.

4.2 PARTICIPANTS.

Personnel from the following organizations conducted and supported CRREL testing:

Organization	
ACW-200B	Test Director/Testing
ANN-400	Test Planning and Observation
AOS-220	Test Engineering/Testing
VNTSC	Test Planning/Engineering/Testing
CRREL	Laboratory Resource Support
Teledyne Controls Inc.	Test Engineering/Testing

4.3 TEST LABORATORIES AND EQUIPMENT.

Two separate laboratories were used for CRREL testing; the Navy Chamber and the ROWPU Chamber. Used during the first two test periods, the Navy Chamber was a 12' x 12' x 9' (L x W x H) lab equipped with a ceiling light and two collocated fans. The fans, which were located just below the ceiling, were part of the air conditioning system used to maintain the required room temperatures. Although the Navy Chamber was capable of reaching temperatures as low as -40° F, RVR tests discussed here included temperatures no greater than -20° F.

The ROWPU Chamber was used during the last test period. The ROWPU Chamber is a 44' x 28' x 15' (L x W x H) laboratory equipped with wall lights and ceiling fans. This room was used to reach temperatures as low as -20° F during testing.

To simulate wind, testing in the ROWPU Chamber involved the use of a squirrel cage fan fastened to a duct. This assembly will be referred to as a "wind tunnel" for the remainder of the report. There were two types of ducts used during testing. The first was cylindrical with dimensions of 4.6' x 2.5' (L x D, ref. photo 3). The second was rectangular with dimensions of 5' x 2.5' x 4' (L x H x W, ref. photo 2). The rectangular wind tunnel was tapered at the discharge end of to produce a more uniform wind.

4.4 TEST OBJECTIVES/CRITERIA.

The primary objectives of CRREL testing were to assess the effectiveness of recent sensor modifications to blowing precipitation and low visibility conditions. Testing was also used to better understand known problems such as snow clogging and icing of the VS. Test objectives and criteria for each test are restated in paragraph 4.5 where test procedures are described individually.

4.5 TEST DESCRIPTIONS.

Five categories of tests were conducted with the Look-Down VS. The categories are discussed further in subsequent sections of the report and are identified as follows:

- Volume Density Baseline Determination,
- Window Contamination and clogging,
- Transmitter and Receiver Temperature Difference Measurement,
- De-Ice Heater Control Performance, and
- Low-Visibility Performance.

4.5.1 Volume Density Baseline Determination.

Volume Density Baseline Determination was used for two main purposes; to relate test conditions to actual weather extinction coefficients and to establish benchmarks for sUbsequent blowing snow tests. Volume Density values (e.g., km^{-1}) refer to the VS extinction coefficient measurement for a given snow rate measured in ounces per minute.

Three versions of the test were performed. Differences between the first two versions included the type of wind tunnel, snow rate and room temperature. The first two versions also differed in the accuracy in which the precipitation (e.g. snow, mist, etc.) was directed. An equipment change allowed a more reliable volume density baseline to be established in version 2.

Unlike versions 1 and 2, the purpose of version 3 was not to determine a baseline for subsequent blowing snow tests. Rather, it was to investigate an apparent anomalie in system operation noted during trial runs of the volume density tests.

It was noted that the direction of precipitation traveling into the scatter volume appeared to have a significant effect on the extinction coefficient measurement. As a result, this test sought to confirm if this relationship actually existed.

The test was performed by first, directing precipitation horizontally into the scatter volume at a known angle and simultaneously recording the extinction coefficients. Secondly, the test was repeated at the opposite angle (i.e., fork axis rotated 180°), and again, the extinction coefficients were recorded. Extinction coefficient measurements for both tests were compared during post test analysis.

4.5.2 Window contamination and clogging.

The Window Contamination and Clogging tests were created to assess sensor modifications to two known problems; high window signals resulting from precipitation striking the VS window and snow clogging/icing of the VS. The simulated weather conditions included freezing mist and blowing snow. In addition, data from these tests was also used to determine how much window contamination signal loss occurred with precipitation on the VS window.

4.5.2.1 Spray Mist Tests.

Portions of the window contamination and clogging tests used a spray mister to simulate ·wet snow" conditions. Wet snow refers to snow with a high water content. The spray mister device was actually a water hose attached to a spray nozzle. This device output tiny droplets of water atomized by pressurized air. The water droplets were frozen by laboratory chamber temperatures before reaching the VS.

Four versions of the spray mist test were conducted. Their differences can be summarized as follows:

- Versions 1 and 2 were conducted at slightly different chamber temperatures;
- Version 3 used the wind tunnel for additional cooling effects; and
- Version 4 used a snow gun to provide a maximum mist volume output.

4.5.2.2 Blowing Snow Tests.

The remaining window contamination and clogging tests were simulations of various blowing snow events. These simulated snow events used different types of man-made snow, wind tunnels, snow directions, snow rates, snow blowers, and chamber laboratories to create a variety of snow conditions. Specifics for each of the aforementioned items are described in the following subparagraphs.

4.5.2.2.1 Man-made snow.

Three types of man-made snow were used in these tests. They are described as follows:

- Hoar frost produced by freezing a large pool of water and collecting the ice particles from the top surface;
- Artificial snow, created before testing and kept in storage; and
- Snow generated in real-time from a snow gun.

4.5.2.2.2 Wind Tunnel Type.

The cylindrical wind tunnel (ref. photo 3) was used for some of the initial tests, but it was discovered that the rectangular wind tunnel (ref. photo 4) provided a more even snow output. The cylindrical wind tunnel produced erratic and uneven amounts of snow that were often bursty. For these reasons, most of the tests utilized the rectangular wind tunnel.

4.5.2.2.3 Direction of Snow Spray.

For most tests, snow was aimed at the sensor from one direction for example, horizontally towards sensor optics. However, to determine whether the sensor was susceptible to high window signals and clogging at other directions, multiple directions and angles were used in tests such as the Angular Blowing Snow Tests or the Upward Blowing Snow Tests.

4.5.2.2.4 Snow Rate.

For most of the blowing snow tests, no automated processes or equipment were used to input snow to the wind tunnel where it was subsequently propelled at the VS. Rather, snow was manually input to a saw dust blower, which strategically output snow particles in front of the wind tunnel and VS. The snow rate refers to the amount of snow (measured ounces per minute) that was manually input to the saw dust blower before being propelled by the wind tunnel. Due to the efficiency of the saw dust blower and wind tunnel, this was essentially the same rate that snow was propelled at the VS.

As discussed in paragraph 4.5.1, the snow rate was selected to match a previously determined volume density. Volume density values were collected initially to establish snow rates for subsequent blowing snow tests. Although the majority of the blowing snow tests used the same rate, different rates were used for some test variations.

4.5.2.2.5 Snow Blower Type.

Three types of snow blower apparatuses were used during testing. The most frequently used apparatus consisted of a saw dust blower with an attached hose, and a wind tunnel. The saw dust blower was used to propel the snow in front of the wind tunnel, which redirected the snow to the VS transmitter or receiver.

other tests used the high powered snow gun to release high water content snow toward the sensor. The snow gun actually created artificial snow during the test by combining pressurized air and water at below freezing temperatures.

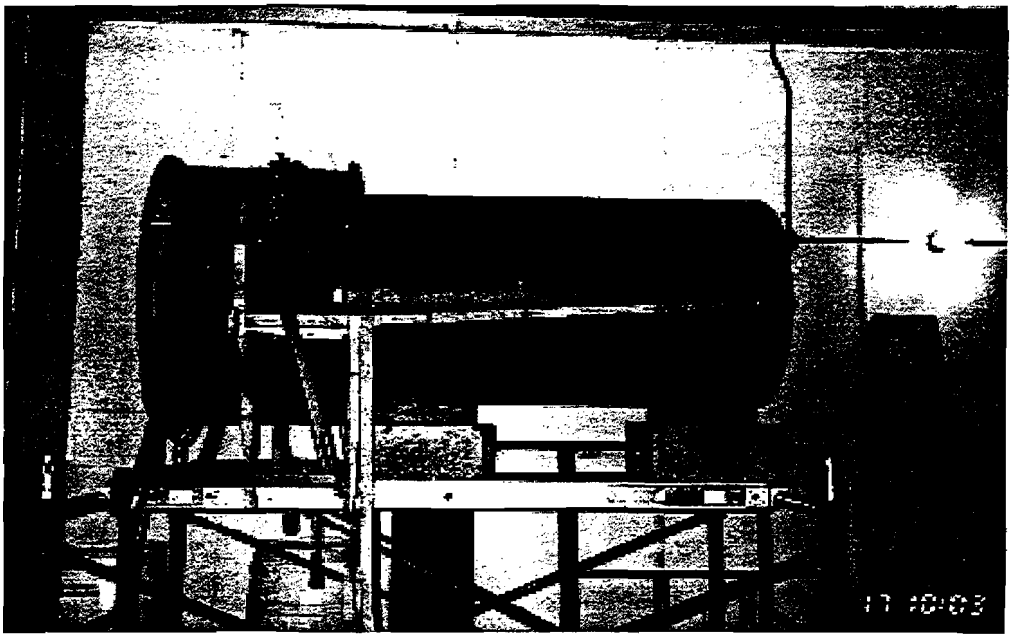

PHOTO 3. CYLINDRICAL WIND TUNNEL

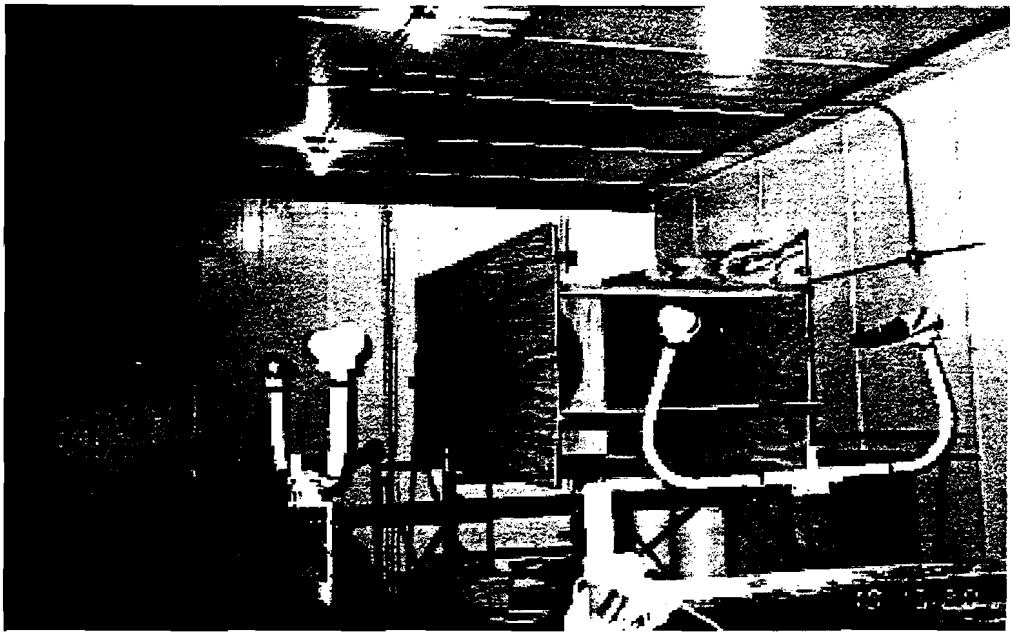

PHOTO 4. RECTANGULAR WIND TUNNEL WITH LKDWN VS

Finally, tests not requiring large chambers used only the saw dust blower with hose attachments to propel snow directly at the sensor. Saw dust blower attachments were actually hoses with different diameter dimensions. Wind speeds produced with the various hose attachments ranged from 11 to 25 mph.

4.5.2.2.6 Chamber Laboratory.

Due to the small amount of space needed, blowing snow and spray mist tests performed without the wind tunnel were conducted in the NAVY Chamber. conversely, all tests using the wind tunnel and fog generation equipment required additional space, and therefore were conducted in the ROWPU Chamber.

4.5.3 Transmitter & Receiver Temperature Difference Measurement.

The RVR VS essentially has three heaters located externally on the hood and inside the sensor head for the transmitter and receiver. Because the operation of these heaters was controlled from thermocouples located in the transmitter, it was theorized that weather conditions might cause icing on the receiver without "detection" by the transmitter. Detection refers to the activation of both transmitter and receiver heaters in the proposed circumstance.

To help determine if this theory was valid, this test was designed to collect temperature readings[4] for the VS transmitter and receiver. The readings were taken during simulated winds where the ambient temperature was near freezing. A significant temperature difference between the transmitter and receiver would suggest that the design of the heater control circuitry be modified.

Two versions of this test were performed. In version 1, a simulated wind was directed at angle perpendicular to the sensor fork axis. Temperature readings from the VS transmitter and receiver were monitored until a steady-state temperature was achieved. The sensor fork axis was then rotated 22.5° and the test was repeated. The latter part of this sequence was repeated until the fork axis had traversed 90° (ref. figures 46 through 55) .

Version 2 of this test was essentially the same as version 1 with the exception of not rotating the sensor fork axis after aChieving the steady-state temperatures. Additionally, the look-out and look-down sensor versions were both used to compare temperature profiles of the prototypes.

4Temperature readings were obtained from external thermocouples placed on the transmitter and receiver hoods. Thermocouples were located approximately 3.5 inches from the outer edge of the hood.

4.5.4 De-ice Heater Control Performance.

It was theorized that "dry" snow would not attach to the sensor window or hood if the heaters were not activated. Dry snow refers to precipitation occurring at temperatures significantly below freezing (e.g. less than -100 F). Since this feature did not exist in the current sensor design, this test sought to determine if this modification would increase the sensor resistance to icing/clogging. A snow clogging rate was established for the sensor. The snow clogging rate was defined as the snow rate (as defined in paragraph 4.5.2.2.3) where the de-ice heater (located near the sensor window) is just able to melt off the accumulation of snow on the window.

After determining the snow clogging rate, the de-ice heater was disabled, and snow was re-directed towards the sensor at the same rate. The snow and ice clogging characteristics of the sensor with and without the de-ice heater were compared.

Two versions of this test were performed. The primary difference between versions was the chamber temperature at which the tests were performed. The second version of the test also used the VS calibration plate to collect data indicating the relationship between extinction coefficient loss with precipitation on the VS window.

4.5.5 Low Visibility Performance•

Although it had been shown in theory that the RVR system could measure visibility within the Category IIIb range, no testing had been performed during actual Category IIIb conditions. To partially alleviate this problem, it was decided to conduct low visibility performance tests at CRREL.

Low Visibility Performance tests were essentially comparisons of extinction coefficient readings for the RVR VS and the Optec transmissometer during fog densities which approximating Category IIIb visibility. The Look-Down VS and Look-Out VS were both used in the comparison. The transmissometer was used as the primary reference for determining actual visibility levels.

Significant problems and limitations were encountered in the creation of man-made fog that were originally not foreseen. For example, attempts to ensure that fog densities about each sensor were the same were extremely difficult because there was no scientific method for "spreading" fog evenly throughout the test chamber. Additionally, it was discovered that it was nearly impossible to disperse fog evenly throughout the chamber. Also, the creation of fog was a formidable task, and there could be differences in the light scattering properties of man-made versus actual fog.

Due to the number and complexity of problems encountered, several versions of tests were performed. The differences in versions can be summarized as follows:

- Problems encountered in sustaining fog densities and apparent discrepancies in RVR readings resulted in the execution of three tests (i.e., Fog Tests 1 through 3) with essentially the same setup and configuration; The Look-Down VS was also recalibrated in Fog Test 2; and

- Fog Tests 4 and 5 involved placing sensors in different locations within the chamber to determine fog density variances within the chamber; The intent of these tests were also to reduce the probability of light interference from collocated sensors.

Due to uncertainties in the relative fog density at each sensor, Category IIIb visibility was identified as achieved when the collection of RVR and transmissometer sensors measured extinction coefficients ranging from 50 km^{-1} to 340 km-l. The following procedure was performed for each test:

- Enough fog was injected in the chamber to surpass the Category IIIb visibility range;

- Fog was then allowed to dissipate naturally until visibility levels increased to the Category IIIb range; and

- After visibility levels entered the Category IIIb range, visibility readings for each sensor were recorded[5].

4.5.5.1 Specialized Equipment and System Modifications.

Performing low visibility performance tests entailed the creation of additional specialized equipment and some minor modifications to the RVR system and transmissometer. The following paragraphs briefly describe these items.

5 To continue testing for longer durations, it was necessary to re-inject fog in the chamber periodically.

4.5.1.1.1 Fog Generation Device.

various equipment and methods were used to produce man-made fog. Most were not successful enough for test purposes. The best method appeared to be the use of the snow gun in conjunction with a steam generator.

4.5.1.1.2 RVR and Transmissometer Modifications.

since RVR readings were required for these tests, additional components needed to be included in the system configuration. These components included the ALS and RLIM. However, since RLIM values could be entered manually, the RLIM sensor was not needed.

The Optec Long-Path transmissometer is normally used to measure distance and visibility not associated with the Category IIIb range. To allow the transmissometer to make short range visibility measurements, the baseline or distance between the transmissometers transmitter and receiver was reduced. The intent of this modification was to permit the transmissometer to have the longest baseline possible and fit within the constraints of the laboratory chamber. The resultant baseline was 20 ft.

4.6 DATA COLLECTION AND ANALYSIS METHOD.

Log files and video cameras were used to record test data. Log files recorded data from the RVR Data Processing unit (DPU) and External User (EU) ports. These files permitted the test team to review RVR performance after each test. Video and infra-red cameras were used to allow the test team to monitor testing from inside or outside of the test laboratory in real-time. Infra-red cameras were used to examine the temperature profile of the VS during window contamination and clogging tests. Video cameras were used to monitor test execution and to review test results.

5.0 TEST CONDUCT.

5.1 VOLUME DENSITY BASELINE DETERMINATION.

As described in paragraph 4.5.1, these tests were used to establish benchmarks for conducting the blowing snow tests. As such, each snow rate was essentially mapped to a target extinction coefficient range which was measured by the VS. The target range for the extinction coefficients was approximately 5 to 40 km^{-1}.

5.1.1 Volume Density Test 1.

Volume Density Test 1 was conducted on August 17, 1993 using the cylindrical wind tunnel in the ROWPU Chamber. The test equipment was set up as shown in figure[6] 2. Other test parameters included the following:

- Chamber temperature of -7.46° F;
- Wind tunnel air speed measured at 20 mph; and
- Snow rate was 48 oz. per minute.

5.1.1.2 Conclusion/Comments.

The maximum extinction coefficient achieved during testing was 1.8 km^{-1}. Since typical snow events have extinction coefficients ranging from 10 to 20 km^{-1}, this snow rate was not considered as representative of actual conditions.

In addition, it was noted that the volume of snow directed from the wind tunnel was large enough to hit the transmitter and receiver of the sensor. Because the purpose of this test was to establish volume density benchmarks for subsequent tests and not actually evaluate sensor performance, this was not desirable.

Although most of the transmitter and receiver window signals were small (i.e., fluctuating between 0% and 6%) large window signal fluctuations in excess of 200% were noted in the transmitter for approximately 30 seconds. This result suggests that the sensitivity of the transmitter may need to be reduced.

The snow volume was chunky and was propelled in spurts rather than in a consistent stream. More snow hit the transmitter and receiver components of the sensor than was anticipated. The design of the wind tunnel was determined to be the cause of these problems. Due to all of the aforementioned problems, the baseline determination from this test was not considered reliable.

---

6 Look-Down VS and Look-Out VS are designated as LKDWN VS and LKOUT VS in figures.

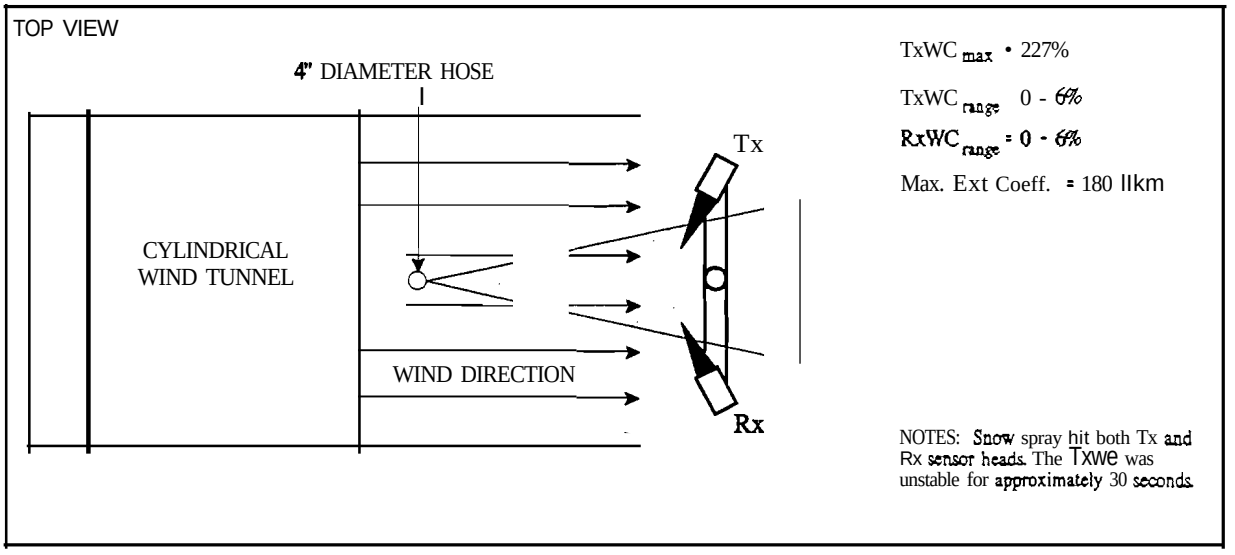

we max • Maximum window contamination observed

we range · Window contamination was in this range during 90% of the test time

Max. Ext Cocff. • Highest observed during the test

Snow Rate: 48 oz. per minute

Room Temp Test 1 • -7.46° F

Wind Speed • 20-22 mph

NOTE: All window contaminations are in 5% units

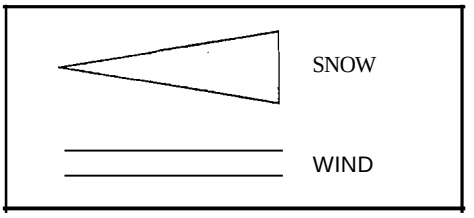

Figure 2. LKDWN VS Volume Density Test 1 ..: Location: ROWPU Chamber

5.1.2 Volume Density Test 2.

Volume Density Test 2 was conducted on August 17, 1993 using the rectangular wind tunnel in the ROWPU Chamber. The test equipment was set up as shown in figure 3. Other test parameters included the following:

- Chamber temperature of 20° F;
- Wind tunnel air speed measured at 20 mph; and
- Snow rate was 16 oz. per minute.

5.1.2.2 Conclusion/Conments.

Although the maximum extinction coefficient of 60.94 km^{-1} was beyond the target range, most of the readings were within the desired range. Due to the efficiency and more uniform wind produced with the rectangular wind tunnel, the snow rate was decreased to 16 ounces: per minute.

Despite the fact that less snow was observed striking sensor components, high transmitter and receiver window signals were still noted with maximum readings between 72% and 92%. Nevertheless, these readings were significantly less than in the previous test.

Unlike the previous test, the majority of snow entered the scatter volume, instead of the sensor head. As a result, large fluctuations in window signals were not expected. Therefore, the large fluctuations in window signals observed throughout the test were unexpected. This result again suggests that the sensor may be too sensitive to precipitation striking the window. Although the window signals readings were high, it was believed that this volume density was representative of actual snow events.

5.1.3 Volume Density Test 3.

As described in paragraph 4.5.1, this test consisted of two parts. Part one measured extinction coefficients of the Look-Down VS at 0° *(i.e.* angle of fork axis with respect to snow direction). Part two measured the volume density of the Look-Down VS at 180°.

The test was conducted on August 23, 1993 using the rectangular wind tunnel in the ROWPU Chamber. Test equipment was set up as shown in figure 4. Other test parameters included the following:

- Chamber temperature of 20° F;
- Wind tunnel air speed measured at 20 mph; and
- Snow input rate of 48 oz. per minute.

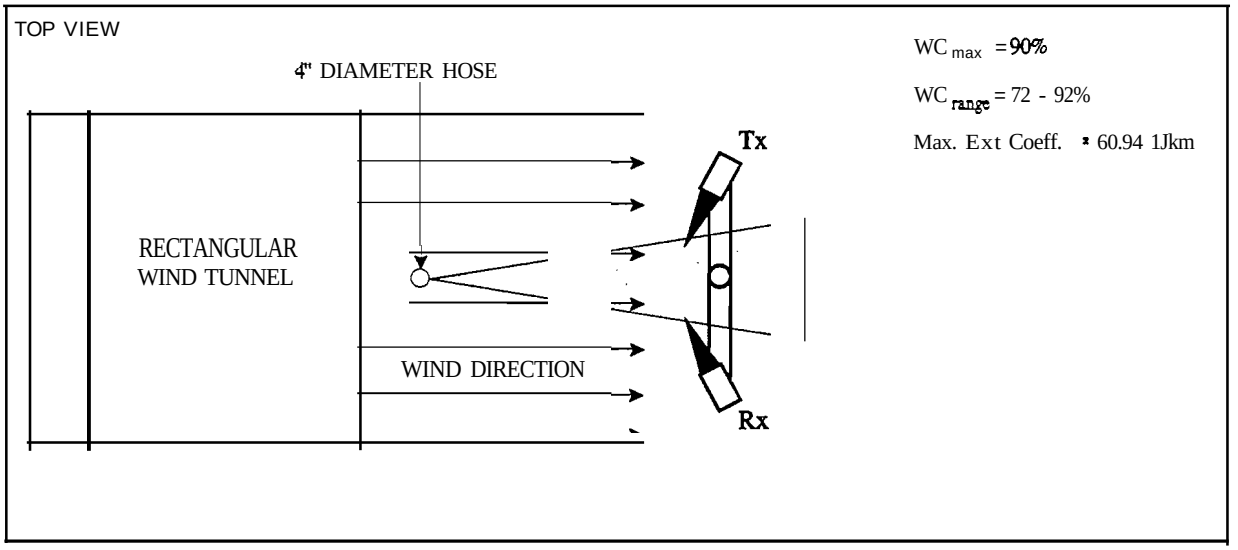

we_{max} - Maximum window contamination observed

we - Window contamination was in this range during 90% of the test

Max. Ext Coeff. = Highest observed during the test

Snow Rate: 16 oz.

Room Temp Test 1 = -7.46°p

Wind Speed = 20-22 mph

NOTE: All window contaminations are in .5% units

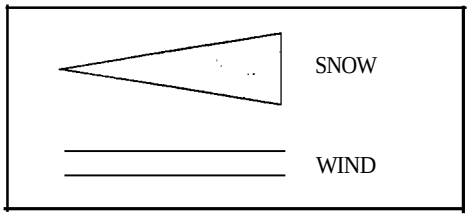

Figure 3. LKDWN VS Volume Density Test 2 - Location: ROWPU Chamber

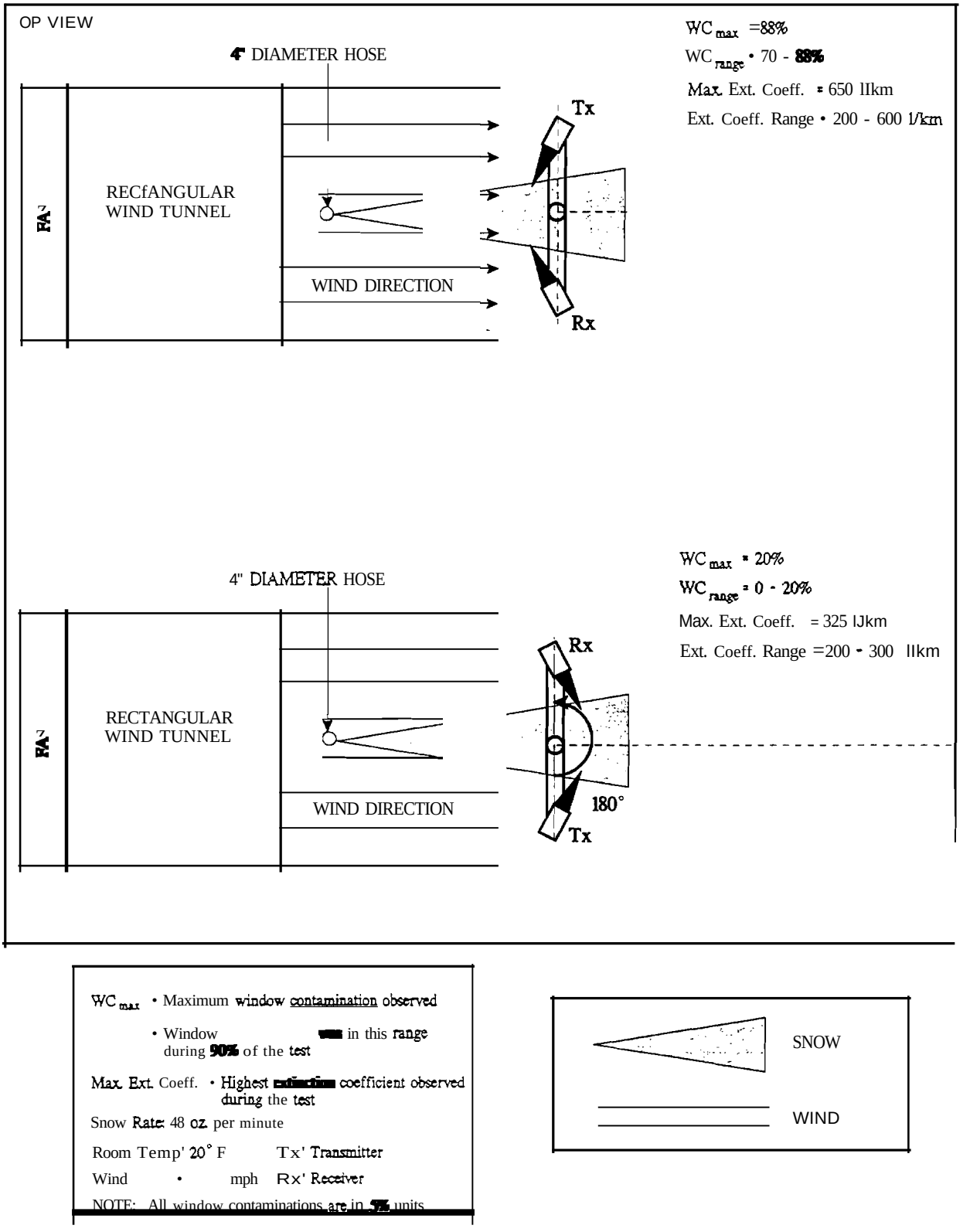

Figure 4. LKDWN VS Volume Density Test 3 - Location: ROWPU Chamber

5.1.3.2 Conclusion/Comments.

The maximum extinction coefficient readings at 0° were 650 km^{-1}, and the maximum extinction coefficient at 180° was 325 km^{-1}. Additionally, it was noted that at 0°, the window signals reached a maximum of 88%, and at 180°, window signals levels reached 20%.

This result suggests that the direction of precipitation in the sensors scatter volume can significantly affect the extinction coefficient measurement. However, due to the large extinction coefficient measurements (650 km^{-1} and 325 km^{-1} both translate to RVR readings less than 100 ft), observed in both tests, the impact on typical RVR readings is not clear. Additional testing at lower precipitation rates should determine the following:

- If these results occur consistently during extinction coefficient levels representative of actual snow events; and
- The degree of accuracy degradation under these circumstances.

5.2 WINDOW CONTAMINATION AND CLOGGING.

These tests consisted of simUlations of blowing snow and mist. As mentioned in paragraph 4.5.2, testing was intended to provide data for studying two VS problems, high window signals reSUlting from precipitation, and clogging/icing. To reduce test execution difficulties, the VS transmitter or receiver was isolated in each test scenario to receive simulated precipitation.

After each blowing snow or mist test, VS windows were examined. When ice, snow or any debris remained on the windows, the windows were cleaned before the next test was executed. If Vs window signal readings were unstable or not near zero, the VS windows were cleaned. This ensured that conditions caused by one test did not affect the VS performance in a subsequent test.

Most of the window contamination and clogging tests produced window signals that were above the normal operating limits of the RVR sensor. As a reSUlt, actual precipitation events with comparable extinction coefficient levels would most likely cause alarms and possibly sensor failure.

5.2.1 Spray Mist Test 1.

Spray Mist Test 1 was conducted on the Look-Down VS receiver on August 5, 1993 in the Navy Chamber. The intent of this test was to observe sensor performance during mist conditions for an extended period of approximately one hour. The test equipment was set up as shown in figure 5. The chamber temperature was -8° F at the start of the test.

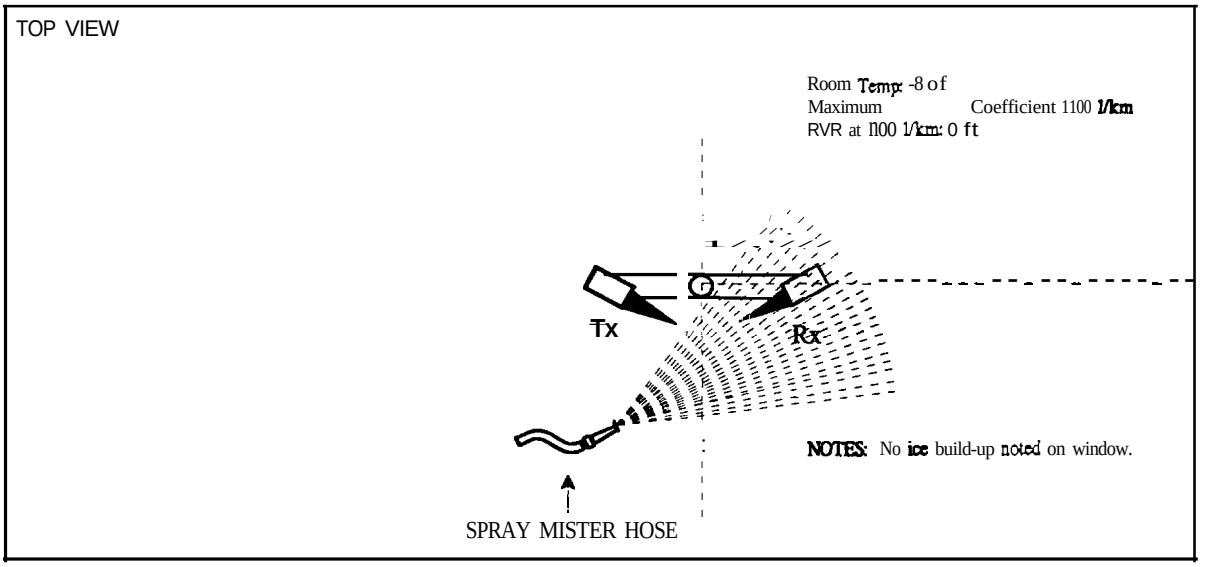

Figure 5. Spray Mist Test - Location: ROWPU Chamber

5.2.1.1 Conclusion/Comments.

The test was stopped numerous times due to clogging of the spray mister device. For periods which the spray mister device was functioning (the longest period was about 15 minutes), there was no accumulation of ice and/or snow on the VS window. Although the accumulation of *ice* was not observed on the window, extremely high extinction coefficients (i.e. 1100 km^{-1} or maximum extinction coefficient[7]) were observed during testing. These levels occurred within 8 minutes during one test interval.

Testing was also halted due to an apparent mismatch between the DPU and EU port extinction coefficient readings. The mismatch was later attributed to the one-minute average value output from the DPU, versus the snapshot value from the EU port, which is output every six seconds.

Due to frequent stoppages during the test, the test objective was not fulfilled. Nevertheless, the lack of ice build up on the VS window was a noted improvement from the look-out configuration. In previous spray mister tests, the look-out configuration experienced ice build up on the window. This test also suggests that extremely high extinction coefficient readings can could occur when precipitation is in the form of a mist.

5.2.2 Spray Mist Test 2.

Spray Mist Test 2 was conducted on the Look-Down VS transmitter on August 6, 1993 in the Navy Chamber. A refitted spray mister device intended to be more clogging resistant was used. The test equipment was set up as shown in figure 6. The test was essentially a repeat of the previous test with the intent of achieving a longer testing duration. other test parameters included a chamber temperature of -18^{0} F, and a wind tunnel air speed of 17 mph.

5.2.2.1 Conclusion/Comments.

As in the previous test, there were many stoppages due to clogging of the spray mist device. In addition, some ice build up was noted on the VS hood. As a result, the test objective was not fulfilled.

---

7 The Look-Down VS is actually only capable of measuring extinction coefficients as high as 600 km^{-1} without significant error. Although extinction coefficients above this value are used in RVR calculations. these values are outside of the normal operating range of the system.

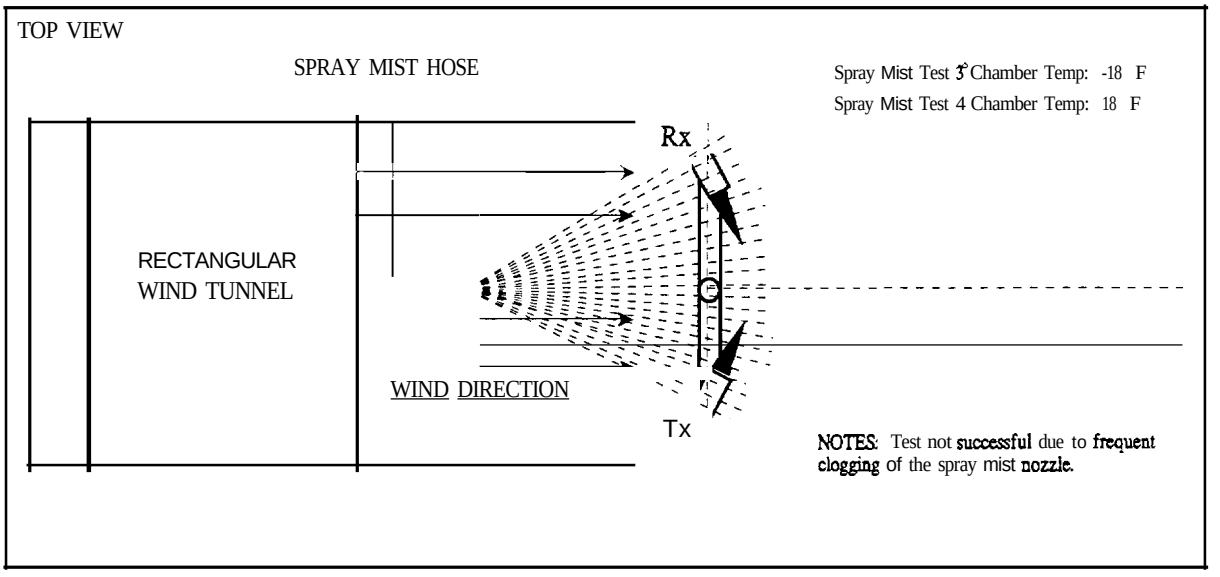

Figure 6. Spray Mist Test - Location: ROWPU Chamber

5.2.3 Spray Mist Test 3.

Spray Mist Test 3 was conducted on August 19, 1993 in the ROWPU Chamber. This test combined the spray mister device with the wind tunnel to propel frozen mist on both the Look-Down VS transmitter and receiver. The wind tunnel air speed was measured to be 20 mph. To reduce probability of clogging the spray mister device, the chamber temperature was increased to 18° F. The test equipment was set up as shown in figure 6. The test objective remained as stated in paragraph 5.2.1.

5.2.3.1 Conclusion/Comments.

Even though the temperature of the room was significantly warmer in this experiment relative to the previous one, clogging of the spray mist device again prevented the successful completion of this test. A spray mister device capable of functioning below freezing temperatures is necessary to conduct this test.

5.2.4 Spray Mist Test 4.

Spray Mist Test 4 was performed on August 22, 1993 in the ROWPU Chamber. To eliminate clogging problems associated with the spray mister device, a snow gun was used to propel precipitation. As in the previous test, mist was directed at the VS transmitter.

5.2.4.1 Conclusion/Comments.

Testing lasted 11 minutes and produced high window signal readings of 83% and extremely high extinction coefficient measurements of 1100 km^{-1}. Water droplets were also observed on the transmitter window and an ice conglomerate formed on the edge of the hood (ref. photo 5).

The Look-Down VS has a heater blanket designed to prevent snow and ice from collecting on the inside of the sensor hood. The heater blanket transfers heat to the hood to melt ice and snow particles. This blanket covers the majority of the hood but leaves the flange area (i.e., outermost portion) unprotected. Testing showed that ice can buildup on unprotected areas of the hood. Extending the heater blanket to the flange would help prevent ice and snow from collecting on the flange of the sensor. The issue of whether snow/ice could collect on sensor components was examined further during the blowing snow and de-ice heater control tests.

5.2.5 Blowing Snow Equipment and Setup.

As previously mentioned, a variety of snow blowing devices were used during testing. Due to the range and intent of each test scenario the VS was placed at various distances from the snow blower. Table 6 details these distances based on the snow blower apparatus used during testing.

PHOTO 5. ICE CONGLOMERATE FORMATION

TABLE 6 VS DISTANCE FROM SNOW BLOWER

SNOW BLOWER EQUIPMENT	DISTANCE FROM BLOWER TO SENSOR	FIG.	TEST NAME
Saw Dust Blower w/ Hose	3.5 ft.	2-4	Horlzontal, Upward
Saw Dust Blower w/ Wind Tunnel	3.0 ft.	6-32	Angular
Snow Gun	6.0 ft.	36-42	Hlgh Intensity

5.2.6 Horizontal Blowing Snow Test.

The Horizontal Blowing Snow Test was conducted on the Look-Down VS transmitter on August 5, 1993 in the Navy Chamber. The intent of this test was to simulate severe blowing snow conditions. A saw dust blower with hose was used as the snow blower apparatus. As the name implies, the hose was positioned parallel towards the floor and directly at the VS hood/window. Testing equipment was set up as shown in figure 7. Other test parameters included the following:

- Chamber temperature of -8° F,
- Hose diameter of 4 in.,
- Saw dust blower air speed of 20 mph,
- Snow rate of 8 oz./minute, and
- Test duration of 10 minutes.

5.2.6.1 Conclusion/Comments.

Throughout the test duration, no ice or snow was observed on the VS window. However, icicles were observed forming in 3 minute intervals at the bottom of the window. At the end of each interval, the icicle would break and then begin to reform. In addition to the icicle formations, water droplets were observed on the VS window, but naturally rolled off during the test.As noted in previous tests, the sensor is susceptible to ice formations on unheated areas of the window and hood. It was not clear whether the ice formations affected the sensors extinction coefficient measurements. Since the location of the ice formations appeared to be away from the sensor beam path, the effect on extinction coefficient is probably small, if any. However, additional tests are recommended to confirm no performance degradation.

5.2.7 Upward Blowing Snow Test.

The Upward Blowing Snow test was conducted on the Look-Down VS transmitter on August 5, 1993 in the Navy Chamber. The intent of this test was to simulate a worst case snow event, as well as to determine the limits of the sensors resistance to snow/ice clogging. The saw dust blower with hose was again used for this

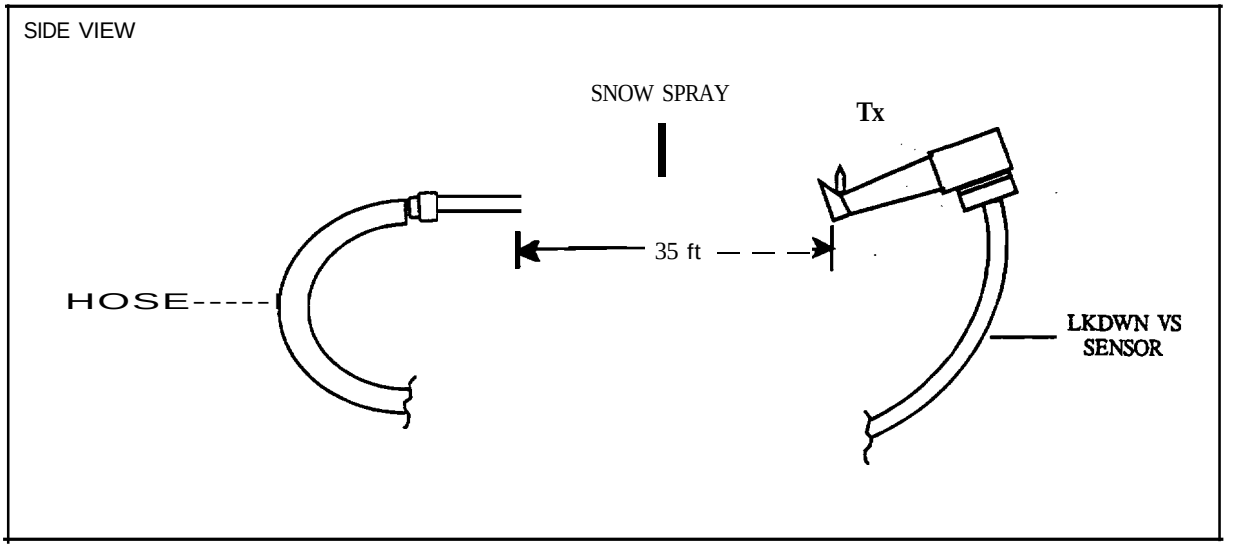

Figure 7. Horizontal Blowing Snow Test - Location: Navy Chamber

test. As the name implies, the hose was positioned at an angle which allow the snow to hit the VS window and underside of the hood. The test equipment was set up as shown in figure 8. Other test parameters remained as stated in paragraph 5.2.6.

5.2.7.1 Conclusion/Comments.

Although a 100% clog (i.e. a layer of snow/ice covering the entire area of the sensor window) formed after 9 minutes and 50 seconds of the test had expired, the entire clog fell out of the sensor approximately 15 seconds after the test was completed.

This results suggests that although the sensor can clog under extremely severe conditions, it can also recover quickly from a clogging[8] state.

5.2.8 Upward Blowing Snow with Calibration Plate Test.

The Upward Blowing Snow with Calibration Plate Test was repeated on the VS transmitter on August 5, 1993 in the Navy Chamber. Although the intent of this test was the same as the previous in part, it was to additionally gain data indicating the relationship between the loss in extinction coefficient with precipitation on the VS window. To avoid hitting the calibration plate the snow direction had to be altered slightly, impinging the VS window at an angle, as opposed to directly in the previous test. The test equipment was set up as shown in figure 9. The other test parameters remained as stated in paragraph 5.2.6.

5.2.8.1 Conclusion/Comments.

As in the previous test, a 100% clog formed on the VS window. However, unlike the previous test, the clog remained embedded for about 5 minutes after the test was completed. Although the clog remained for a much longer period of time than previously, the look-down configuration clogging characteristics still appear to be superior to the look-out configuration. These clogging characteristics include a quicker recovery time and increased resistance (based on a comparison of test results with the look-out configuration VS).

A probable explanation for the extended length of time of the clog is that the design of the hood allows the look-down configuration to be mare susceptible to precipitation impinging the VS window at angles rather than directly in front of the window. A similar relationship was noted during the angular blowing snow tests (ref. paragraph 5.2.9) where higher window

8 Since clogging of the VS window and hood underside can block the light beam path to or from the sensor, unreliable extinction coefficient readings can occur. This will result in higher-than-actual RVR readings.

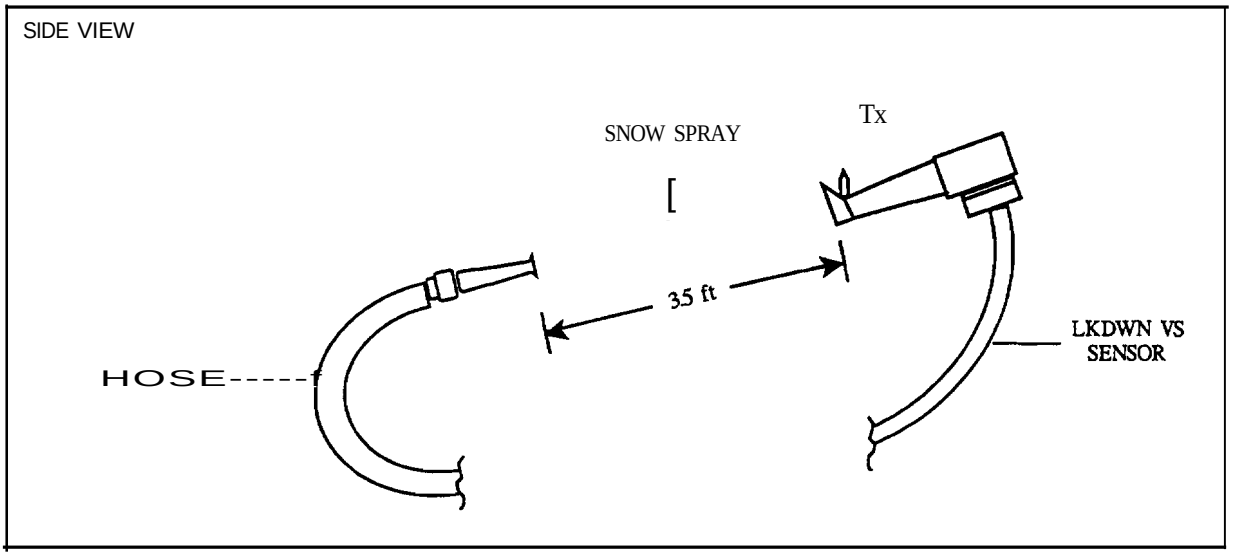

Figure 8. Upward Blowing Snow Test - Location: Navy Chamber

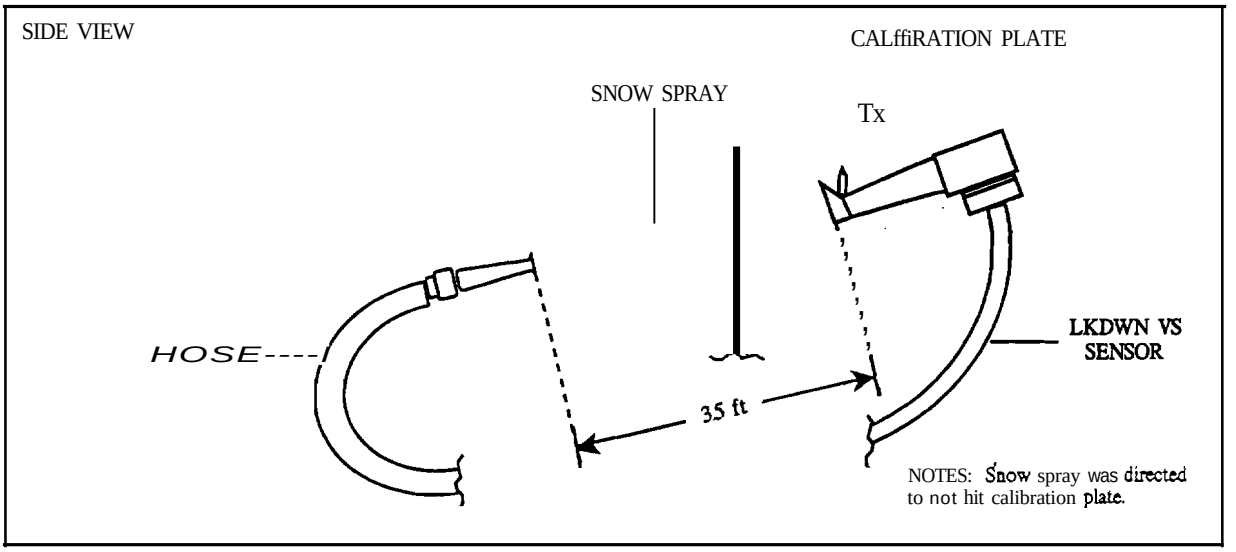

Figure 9. Upward Blowing Snow Test *wi* Calibration Plate - Location: Navy Chamber

signal readings were observed in the look-down configuration than in the look-out. As a result, the increased susceptibility of the sensor lead to a stronger clog.

5.2.9 Angular Blowing Snow Tests.

The primary objective of these tests was to compare how well the hoods of the Look-Down VS and Look-out VS protected their windows from horizontally blowing snow. The snow rate as determined from Volume Density Test 2. was directed at each sensors transmitter or receiver. Each subset of these tests consisted of blowing snow from angles ranging from 0 to 180° in 22.5° increments. The test duration at each angle was approximately 5 minutes.

The Angular Blowing Snow Tests were all conducted August 18, 1993 in the ROWPU Chamber. Window signals readings and extinction coefficient levels were monitored for each test. Figures[9] 10 through 36 detail the test scenarios and the following test parameters:

- Wind tunnel air speed (20 to 22 mph),
- Chamber room temperature (20° F),
- position of sensors in relation to wind tunnel,
- Window signals and extinction coefficient readings,
- Percentage of Vs window clogging, and
- Corresponding RVR readings where applicable.

5.2.9.1 Conclusion/Comments.

Although the look-out VS was more susceptible to snow and/or ice clogging than the VS, the Look-Down VS exhibited higher window signals than the look-out VS. Because high window signals effect the sensors extinction coefficient measurement and as a result its RVR determination, sensor accuracy should be examined under conditions including high window signals.

5.2.10 Blowing Snow with Calibration Plate Test.

Angles designated as "weakest" were defined as the sensor fork angle most receptive to high window signals and extinction coefficient readings. Through data analysis from the Angular Blowing Snow results, these angles were determined to be 112.5° and 135°. After the weakest angles were determined, the blowing snow test was repeated with the calibration plate installed. The calibration plate was installed to help determine the amount of extinction coefficient loss with precipitation on the window.

---

9 Look-Down VS and Look-Out VS are designated as LKDWN and LKOUT respectively in all figures.

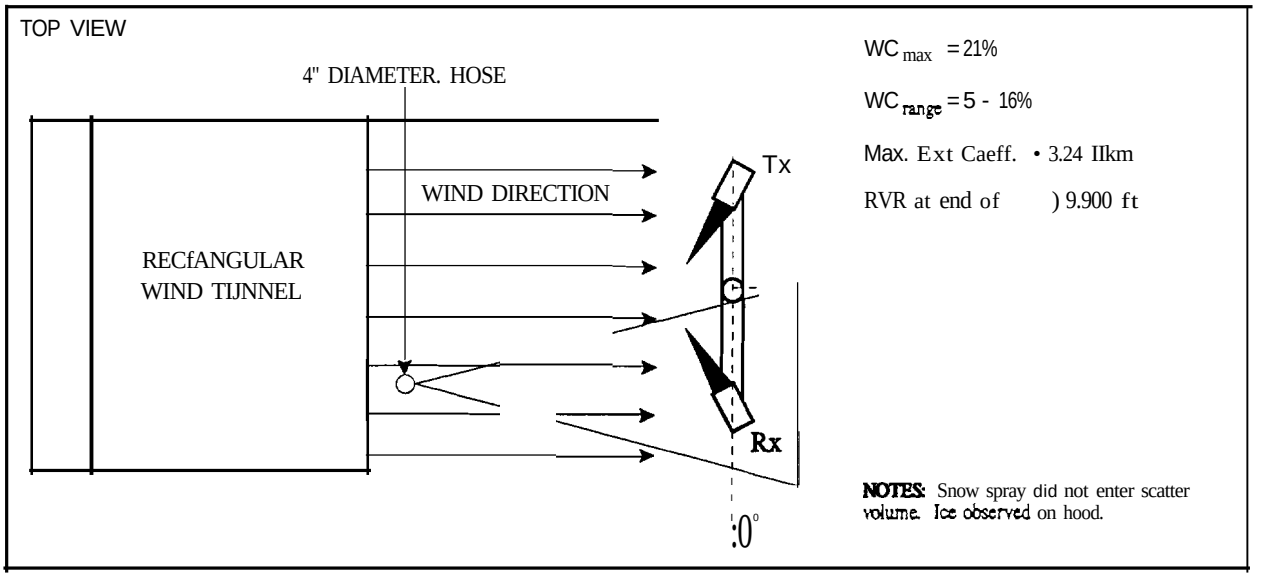

Figure 10. LKDWN VS Blowing Snow Test at OO(Rx) - Location: ROWPU Chamber

WC max • Maximum window contamination observed

WC range • Window contamination was in this range during 90% of the test

Max. Ext Coeff. • Highest extinction coefficient observed during the test

Snow Rate: 16 oz. per minute

Room Temp' 20 of Tx • Transmitter

Wind Speed • 20-22 mph Rx =Receiver

NOTE: All window contaminations are in .5% units

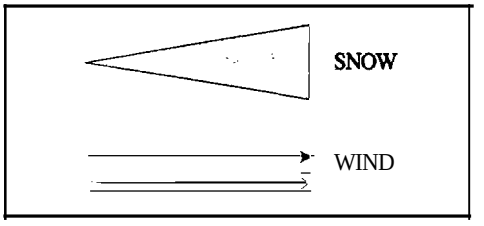

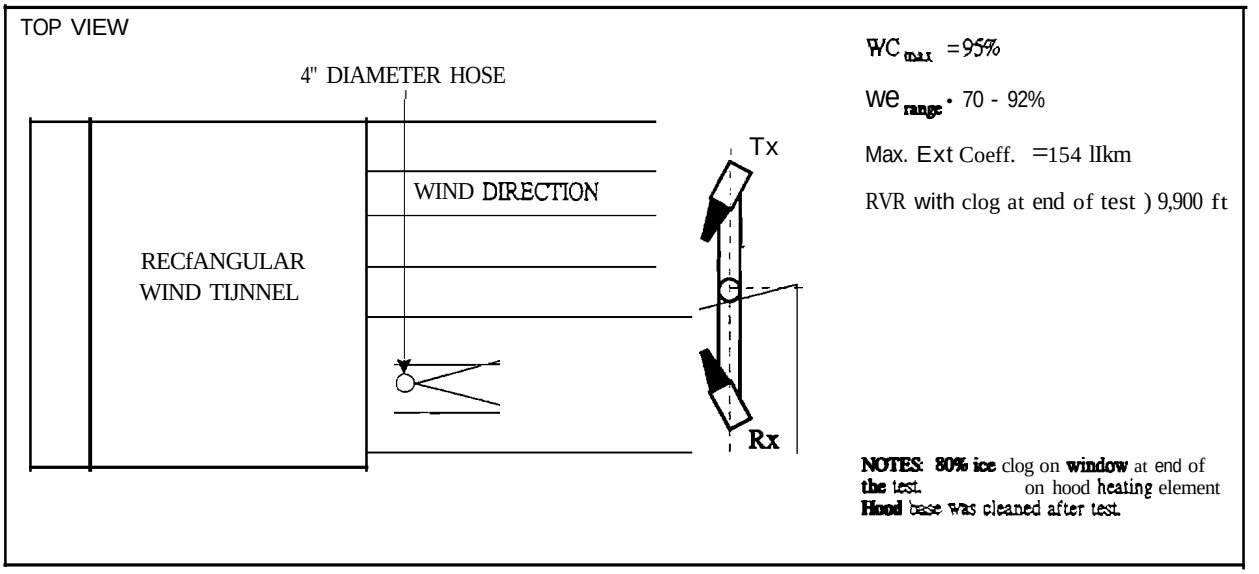

Figure 11. LKOUT VS Blowing Snow Test at 0°(Rx) - Location: ROWPU Chamber

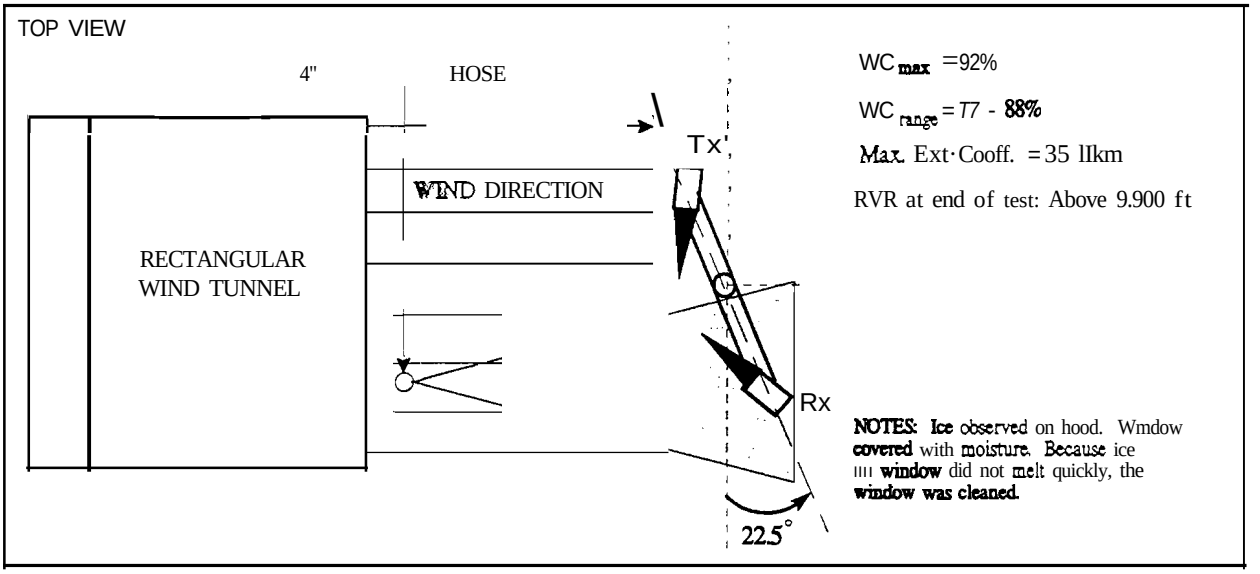

Figure 12. LKDWN VS Blowing Snow Test at 225°(Rx) - Location: ROWPU Chamber

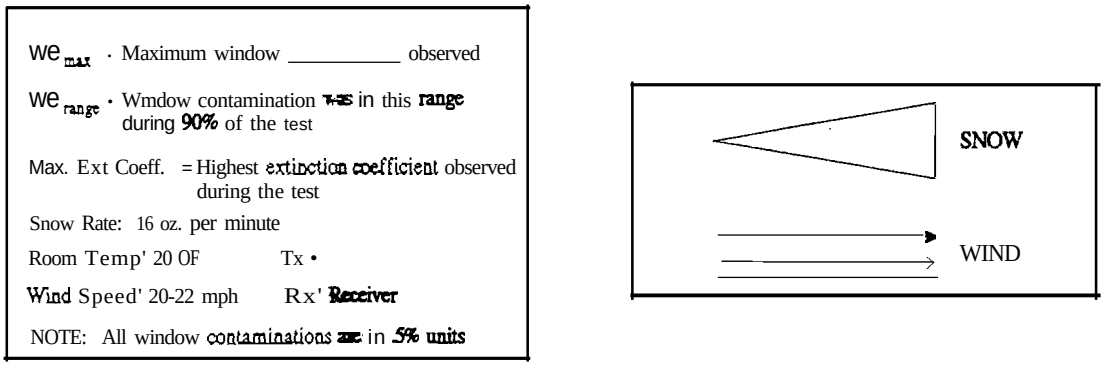

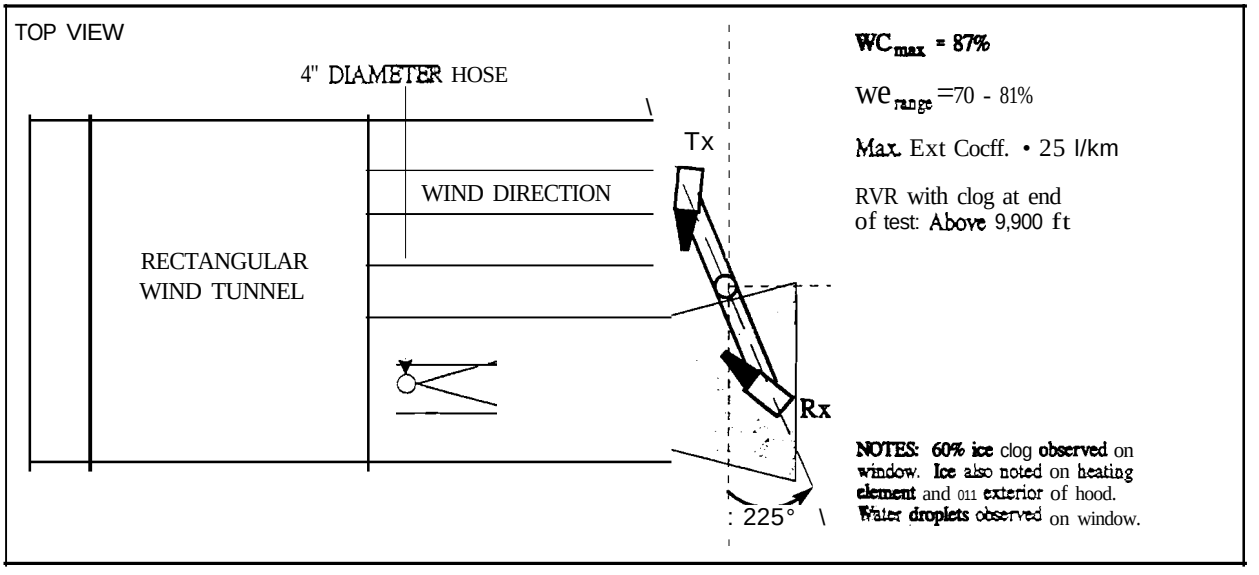

Figure 13. LKOUT VS Blowing Snow Test at 225° (Rx) - Location: ROWPU Chamber

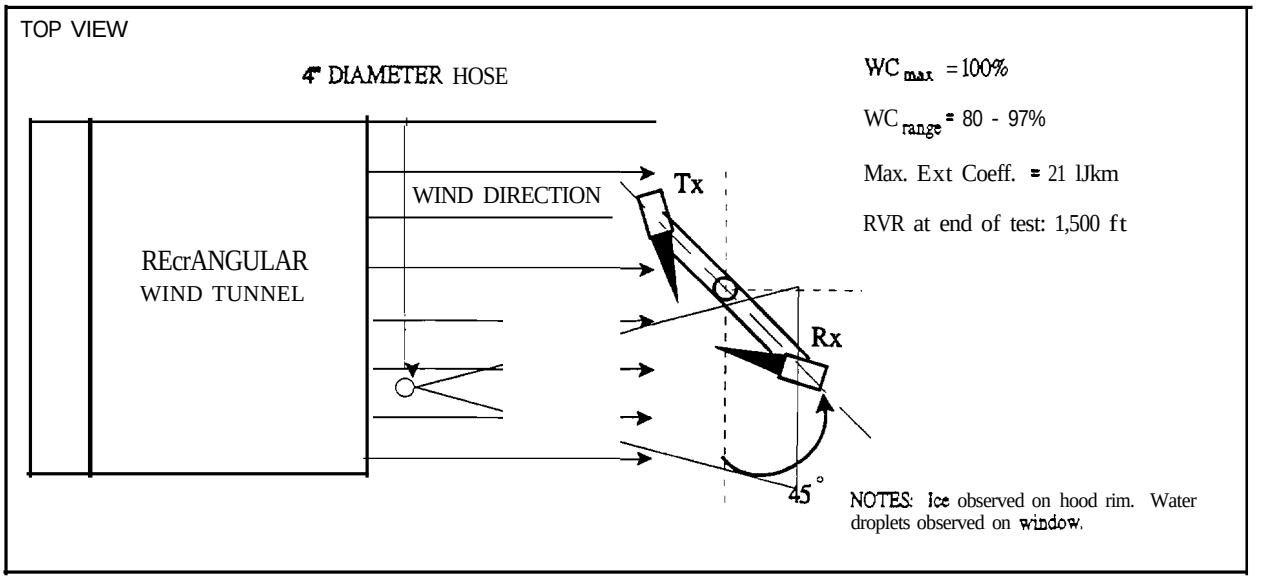

Figure 14. LKDWN VS Blowing Snow Test at 45°(Rx) - Location: ROWPU Chamber

we max • Maximum window contamination observed

we range • Window contamination was in this range during 90% of the test

Max. Ext Coeff. • Highest coefficient observed during the test

Snow Rate: 16 oz. per minute

Room Temp' 20 OF Tx = Transmitter

Wind Speed • 20-22 mph Rx' Receiver

NOTE: All window contaminations are in 5% units

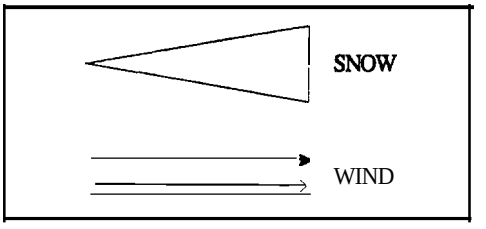

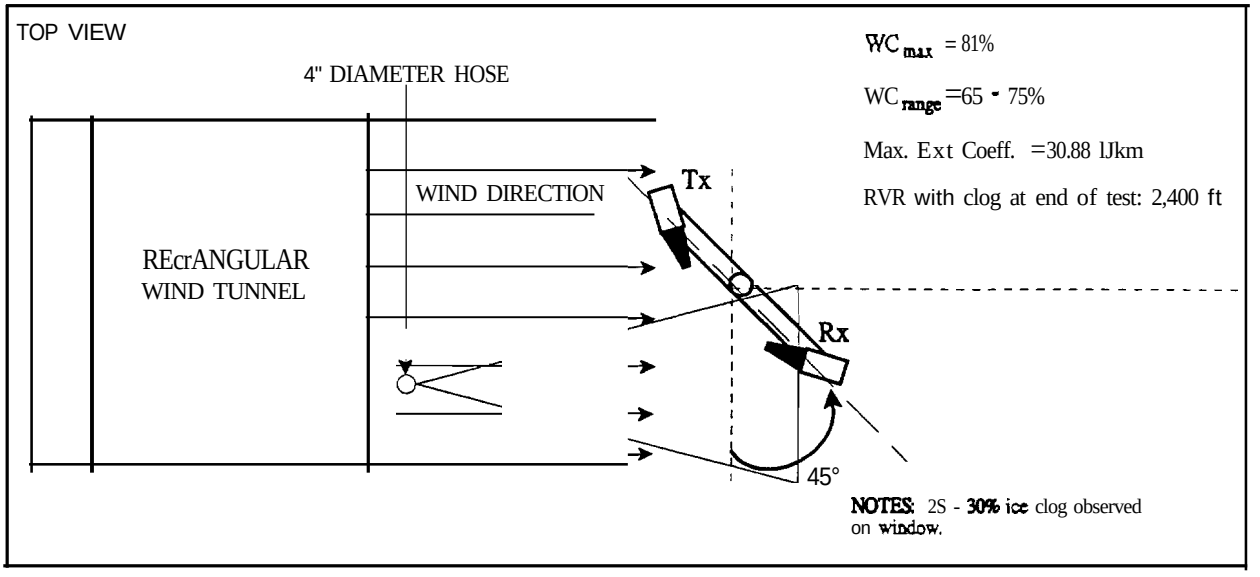

Figure 15. LKOUT VS Blowing Snow Test at 45°(Rx) - Location: ROWPU Chamber

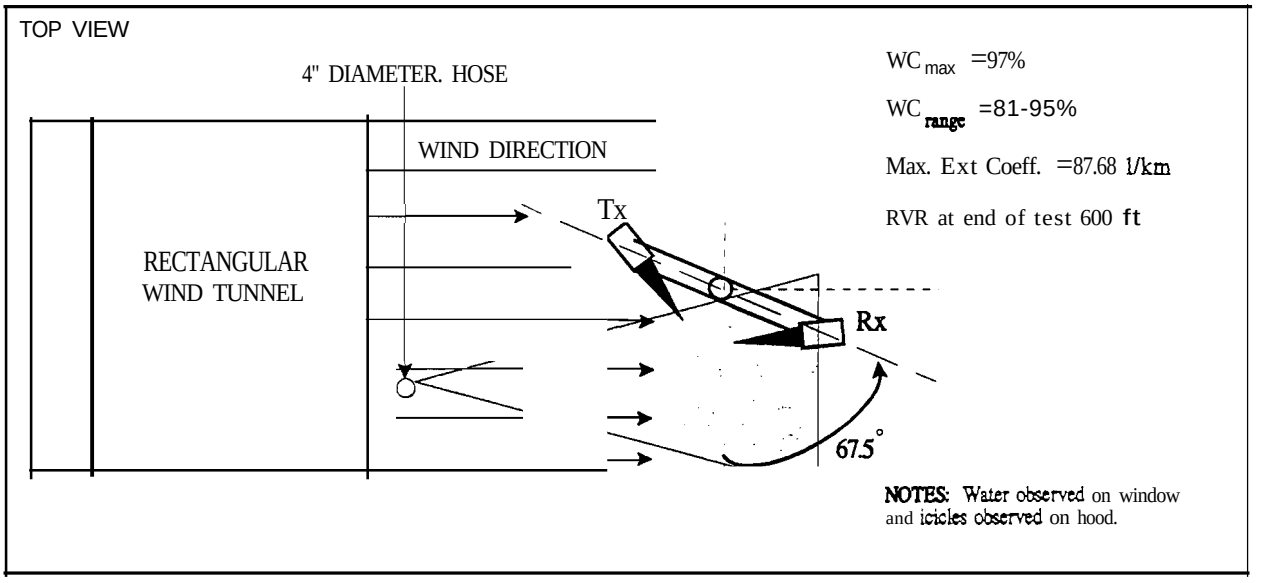

Figure 16. LKDWN VS Blowing Snow Test at 67SO(Rx) - Location: ROWPU Chamber

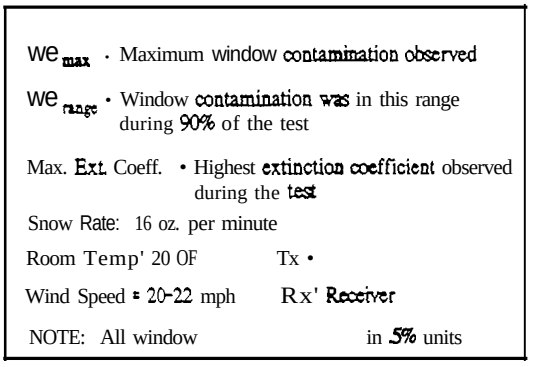

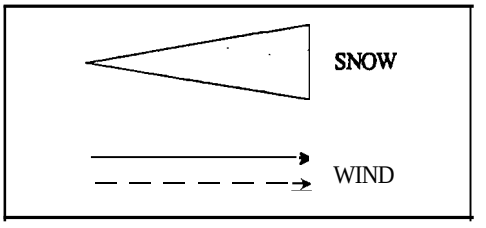

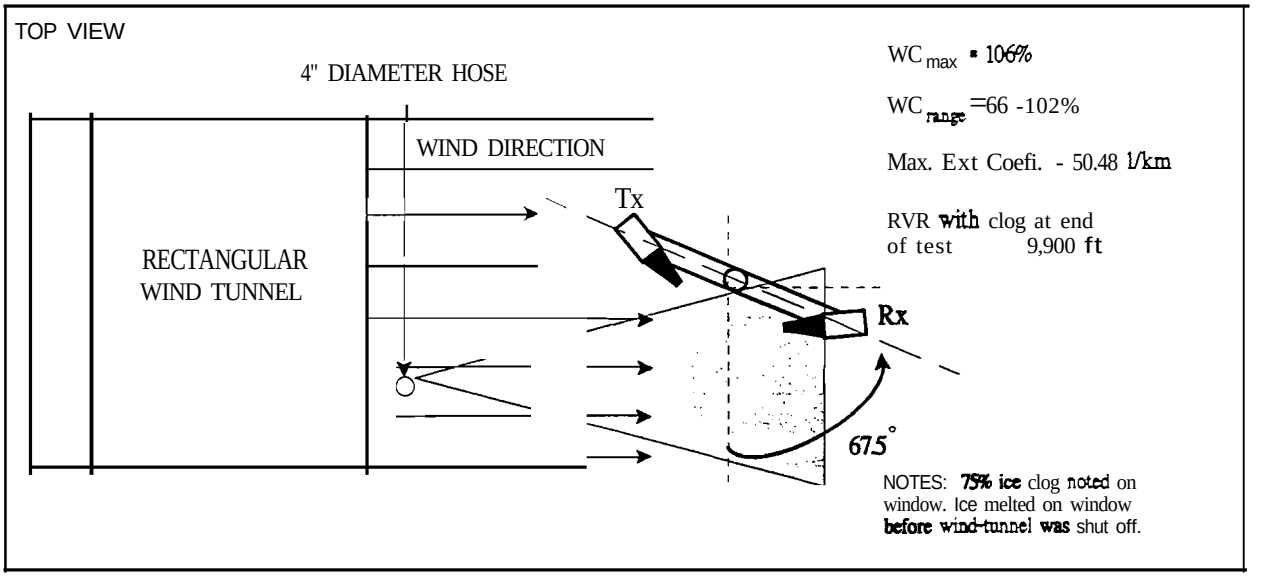

Figure 17. LKOUT VS Blowing Snow Test at *67So(Rx)* - Location: ROWPU Chamber

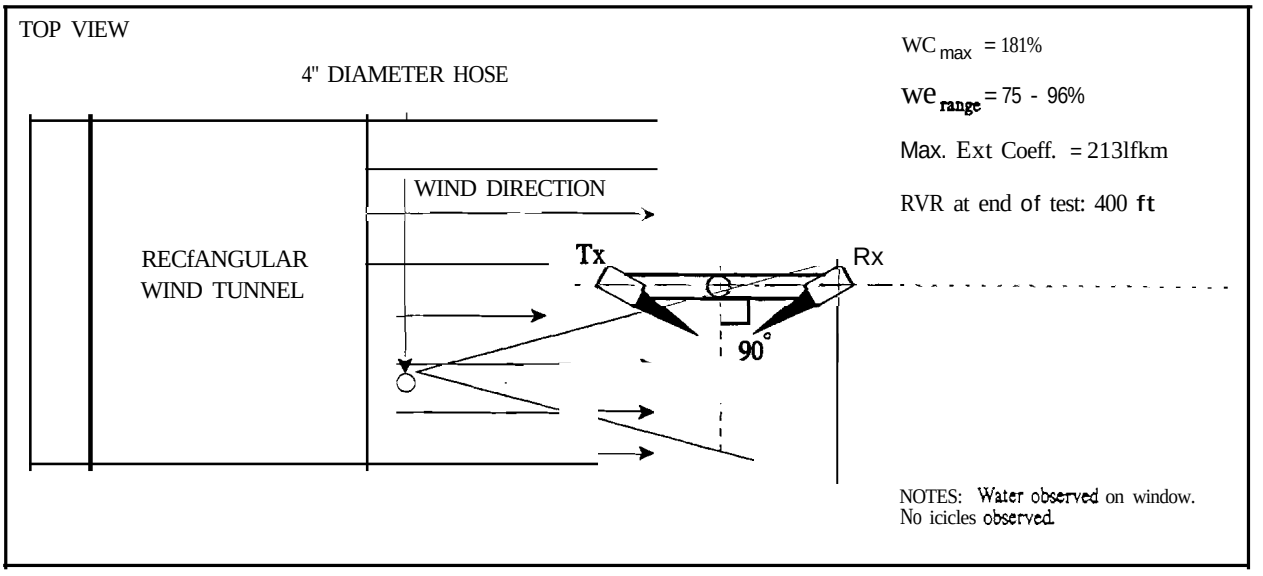

Figure 18. LKDWN VS Blowing Snow Test at 90° (Rx) - Location: ROWPU Chamber

we max = Maximum window contamination observed

we range = Window contamination was in this range during 90% of the test

Max. Ext Coeff. • Highest extinction coefficient observed during the test

Snow Rate: 16 oz. per minute

Room Temp • 20° F Tx •

Wind Speed • mph Rx = Receiver

NOTE: All window are in 5% units

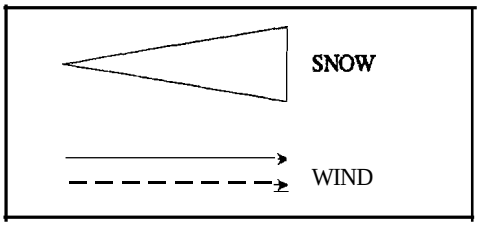

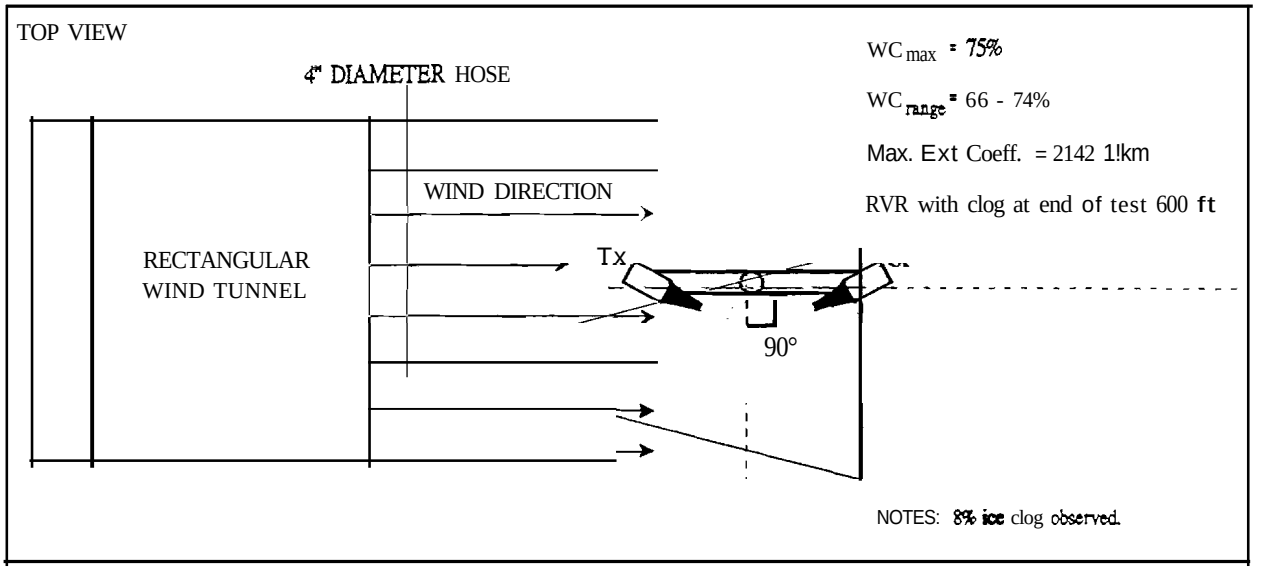

Figure 19. LKOUT VS Blowing Snow Test at 90° (Rx) - Location: ROWPU Chamber

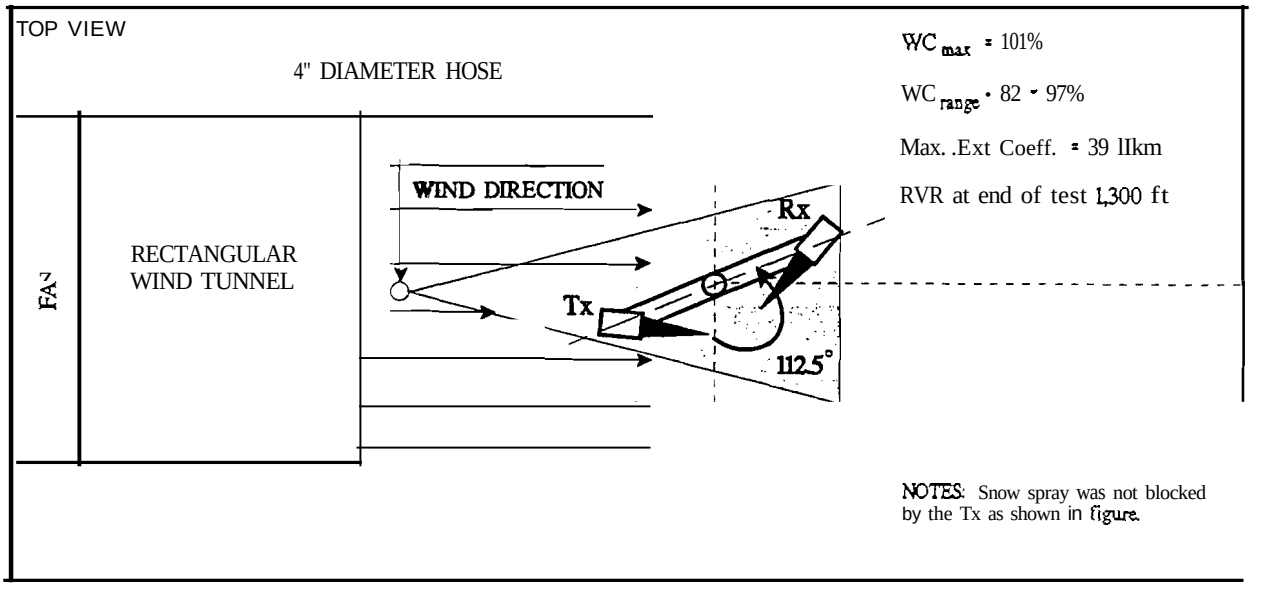

Figure 20. LKDWN VS Blowing Snow Test at 1125°(Rx) - Location: ROWPU Chamber

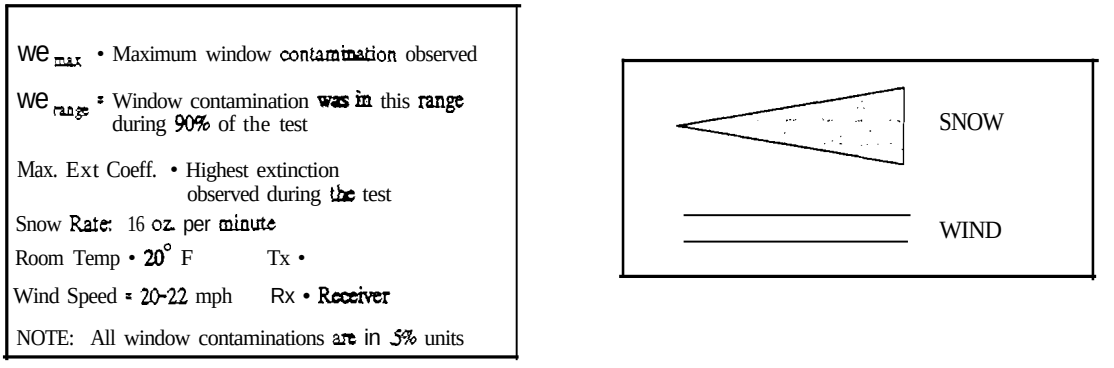

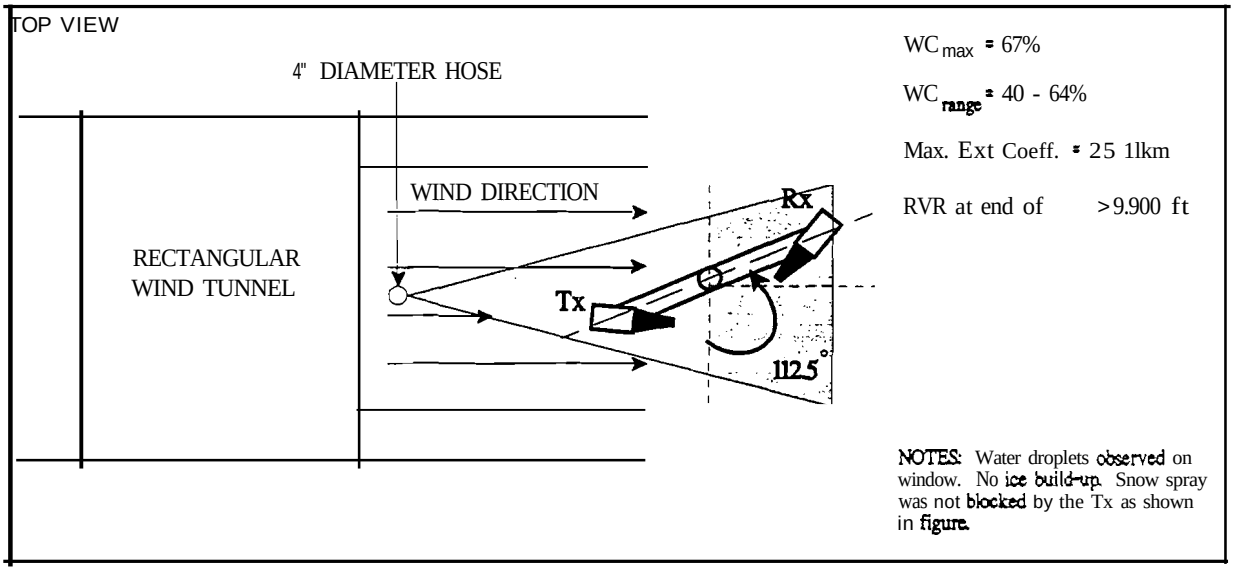

Figure 21 LKOUT VS Blowing Snow Test at 1125°(Rx) - Location: ROWPU Chamber

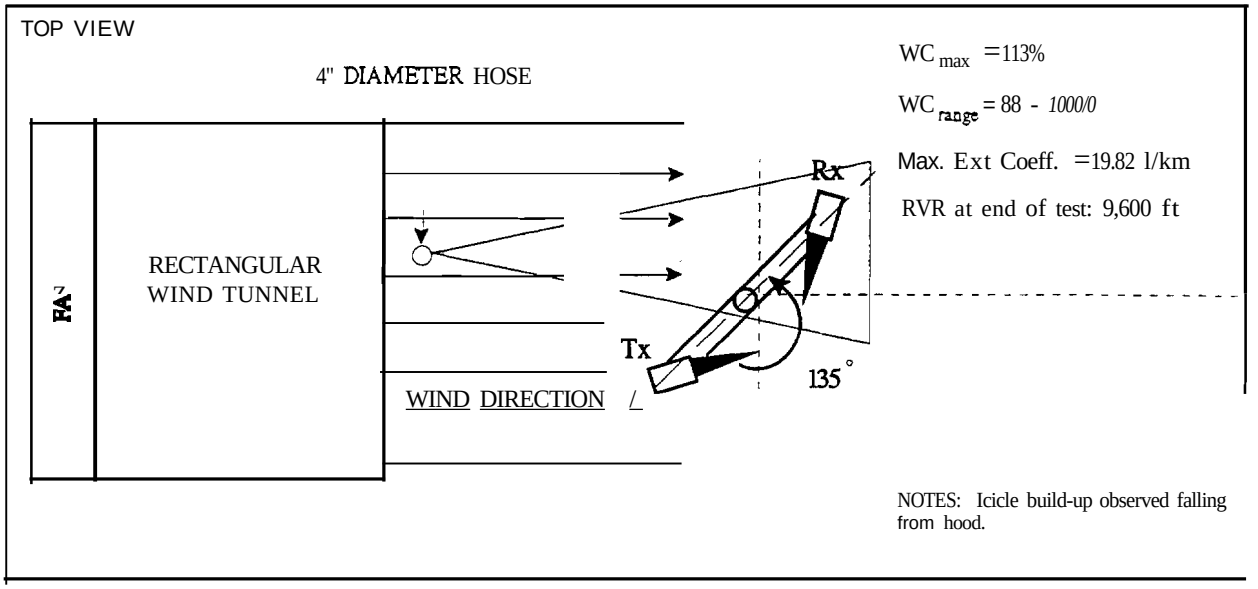

Figure 22. LKDWN VS Blowing Snow Test at 135°(Rx) - Location: ROWPU Chamber

we max • Maximum window contamination observed

we range = Wmdow contamination was in this range during 90% of the test

Max. Ext Coeff. • Highest extinction coefficient observed during the test

Snow Rate: 16 oz. per minute

Room Temp • 20° F Tx • Transmitter

Wind Speed • 20-22 mph Rx • Receiver

NOTE: All window contaminations arc in 5% units

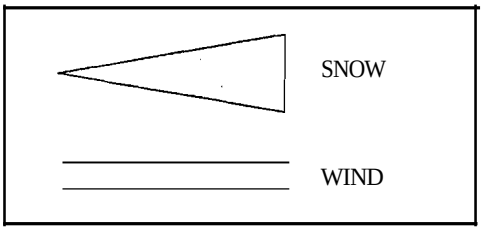

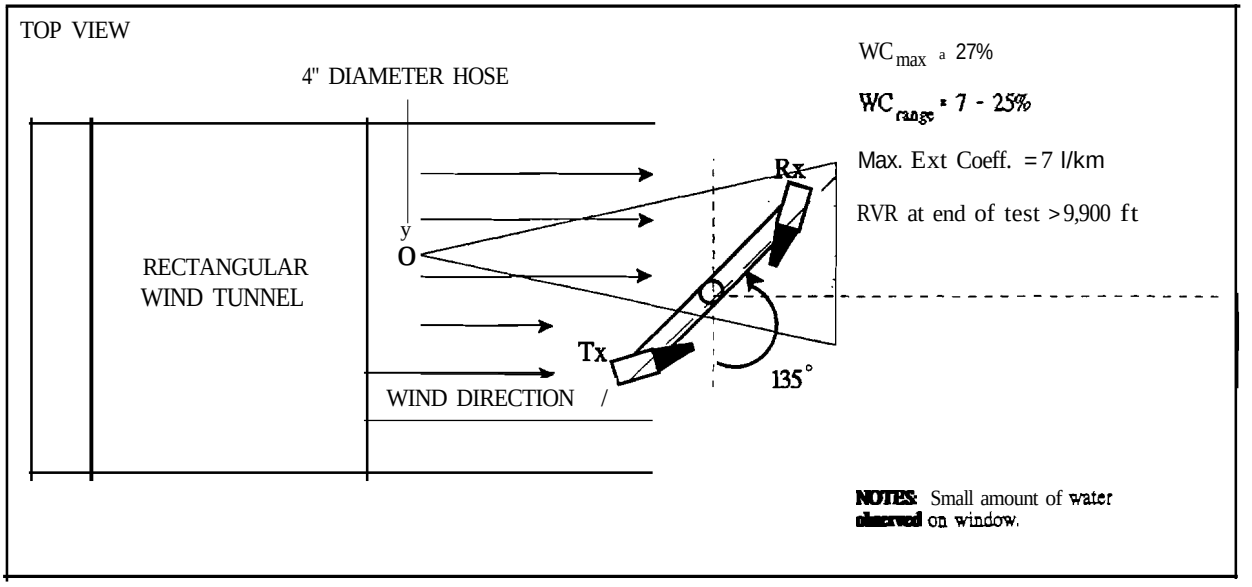

Figure 23. LKOUT VS Blowing Snow Test at 135° (Rx) - Location: ROWPU Chamber

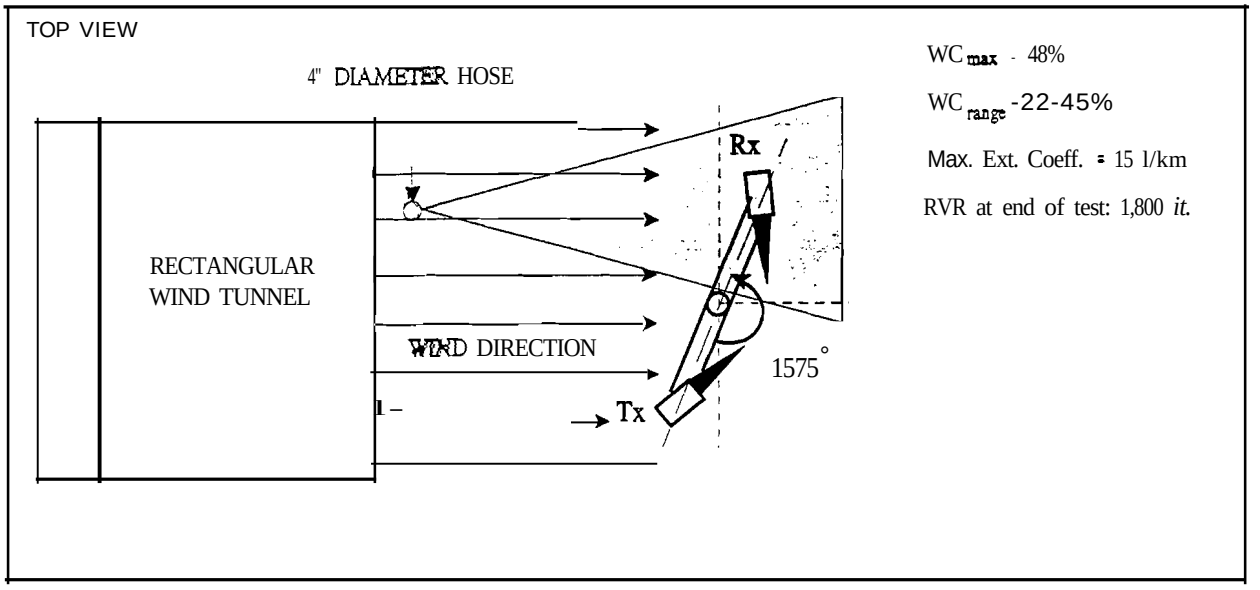

Figure 24. LKDWN VS Blowing Snow Test at 157S° (Rx) - Location: ROWPU Chamber

we max - Maximum window contamination observed

we range - Wmdow contamination was in this range during 90% of the test

Max. Ext Coeff. = Highest extinctiOll coefficient observed during the test

Snow Rate: 16 oz. per minute

Room Temp - 20° F Tx •

Wind Speed • 20-22 mph Rx = Receiver

NOTE: All window contaminations are in 5% units

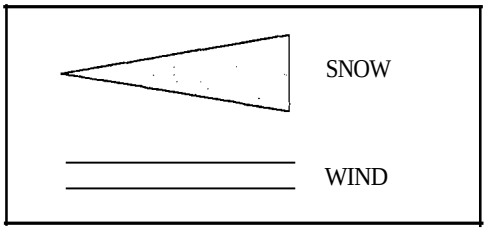

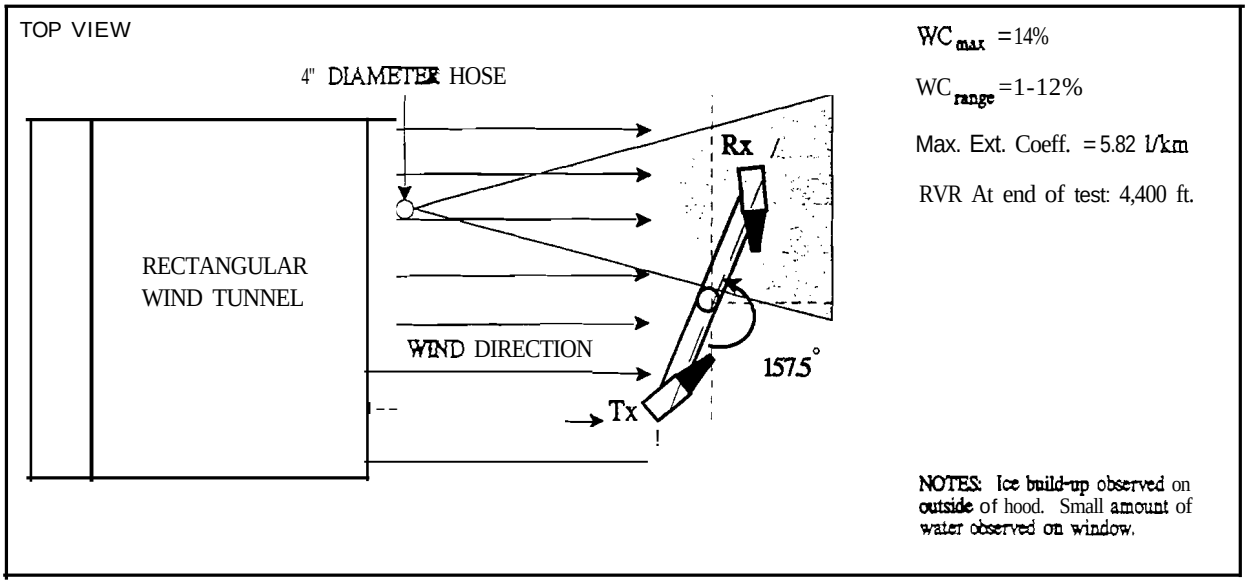

Figure 25. LKOUT VS Blowing Snow Test at 157.5° (Rx) - Location: ROWPU Chamber

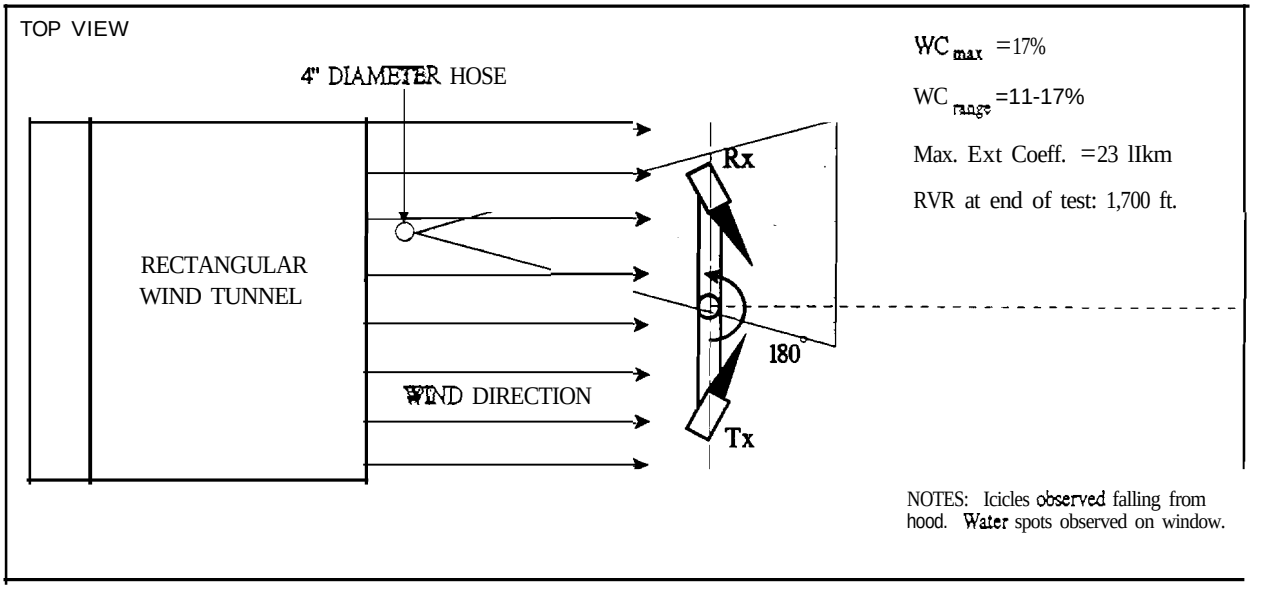

Figure 26. LKDWN VS Blowing Snow Test at 180° (Rx) - Location: ROWPU Chamber

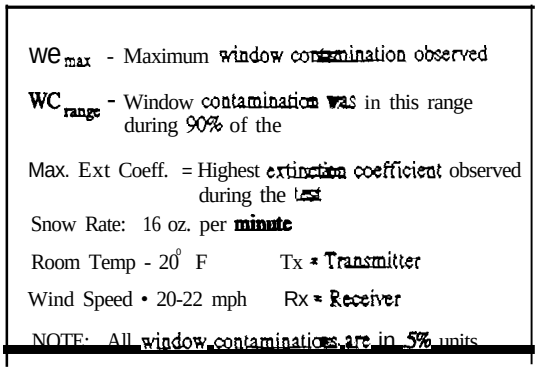

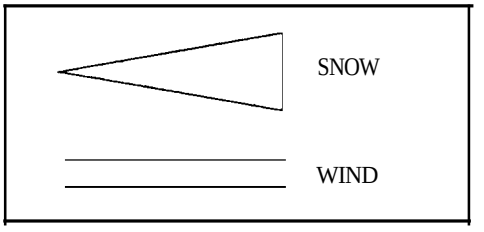

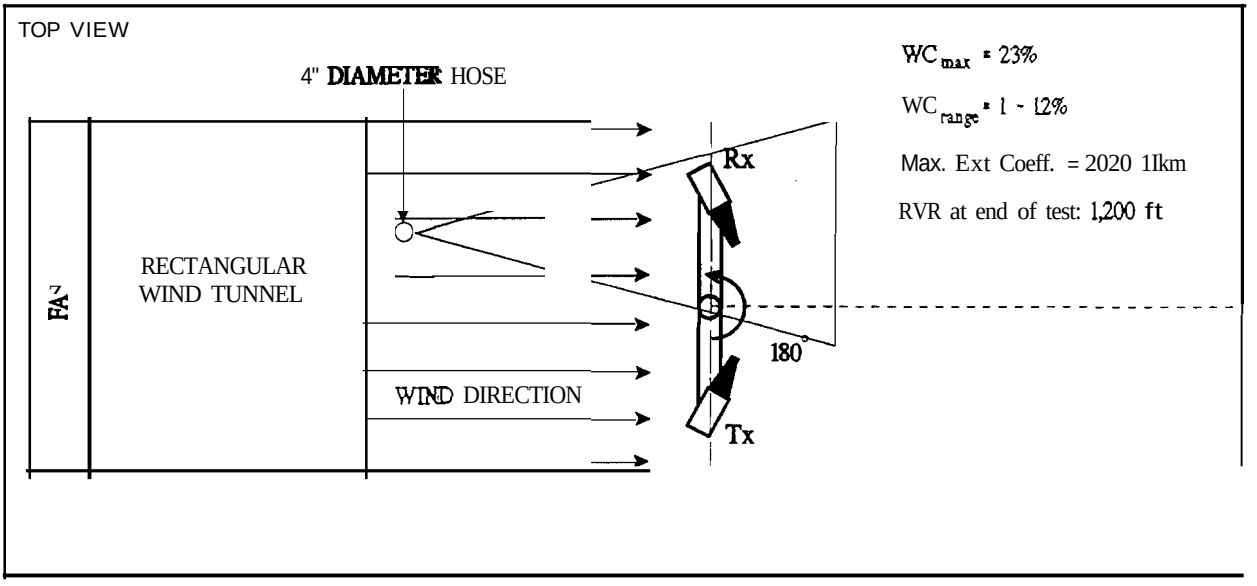

Figure 27. LKOUT VS Blowing Snow Test at 180° (Rx) - Location: ROWPU Chamber

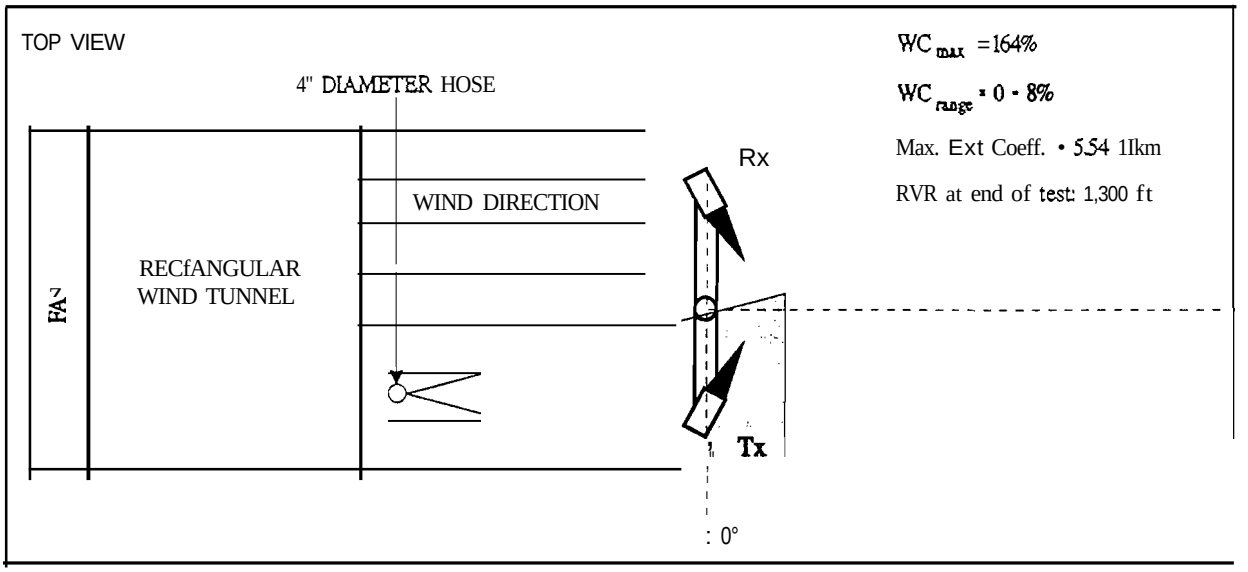

Figure 28. LKDWN VS Blowing Snow Test at 00(Tx) - Location: ROWPU Chamber

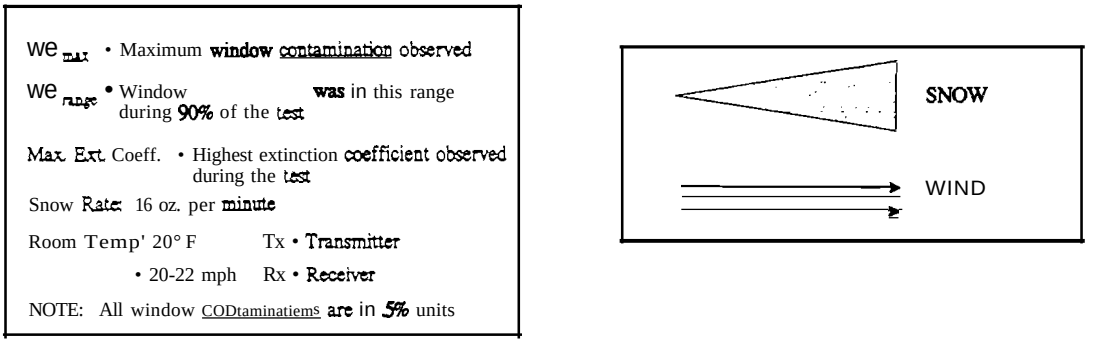

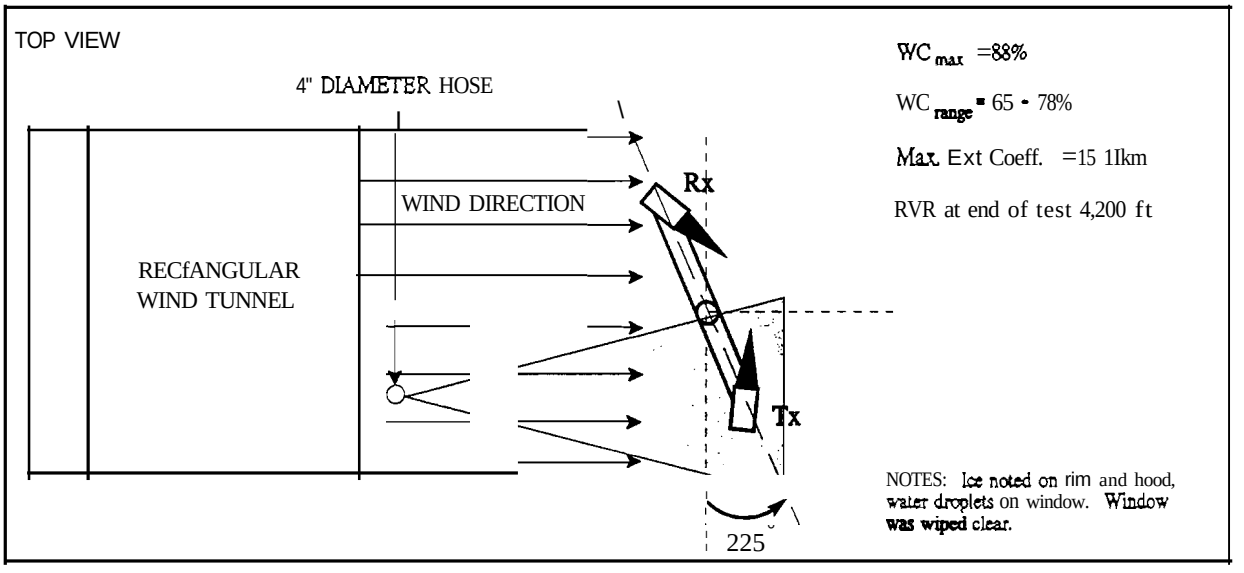

Figure 29. LKDWN VS Blowing Snow Test at 225'(Tx) - Location: ROWPU Chamber

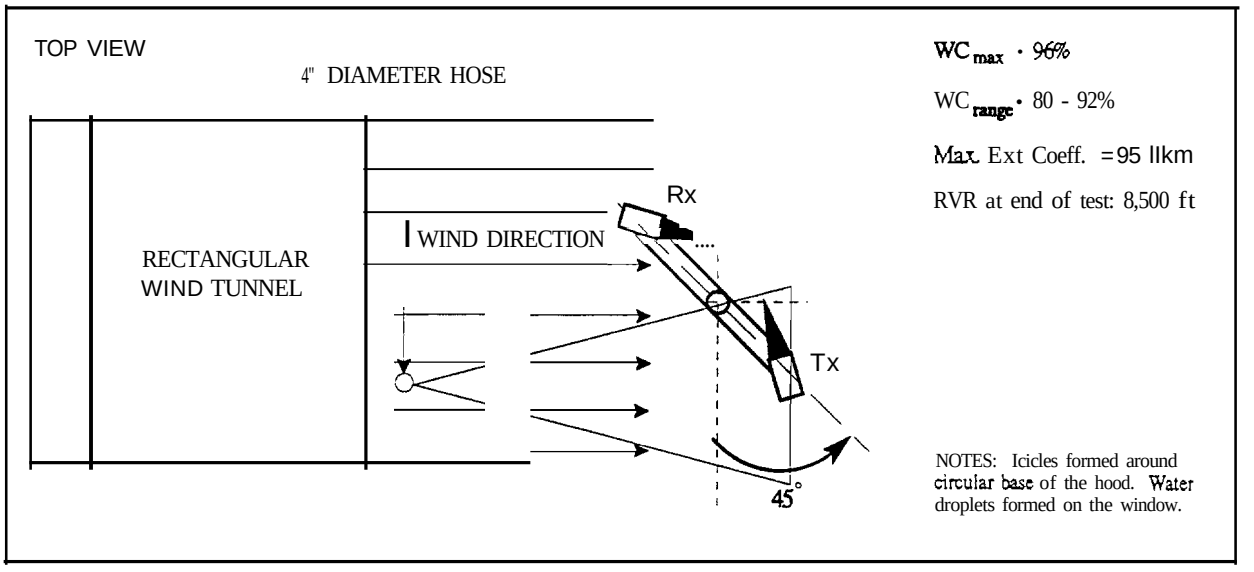

Figure 30. LKDWN VS Blowing Snow Test at 45°(Tx) - Location: ROWPU Chamber

we max Maximum window

we Window contamination was in this range during 90% of the test

Max. Ext Coeff. • Highest extinction coefficient observed during the test

Snow Rate: 16 oz. per minute

Room Temp' 20° F Tx •

Wmd 20-22 mph Rx = Receiver

NOTE: All window contaminations are in 5% units

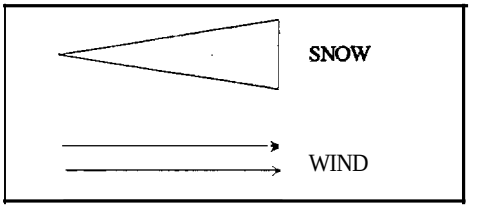

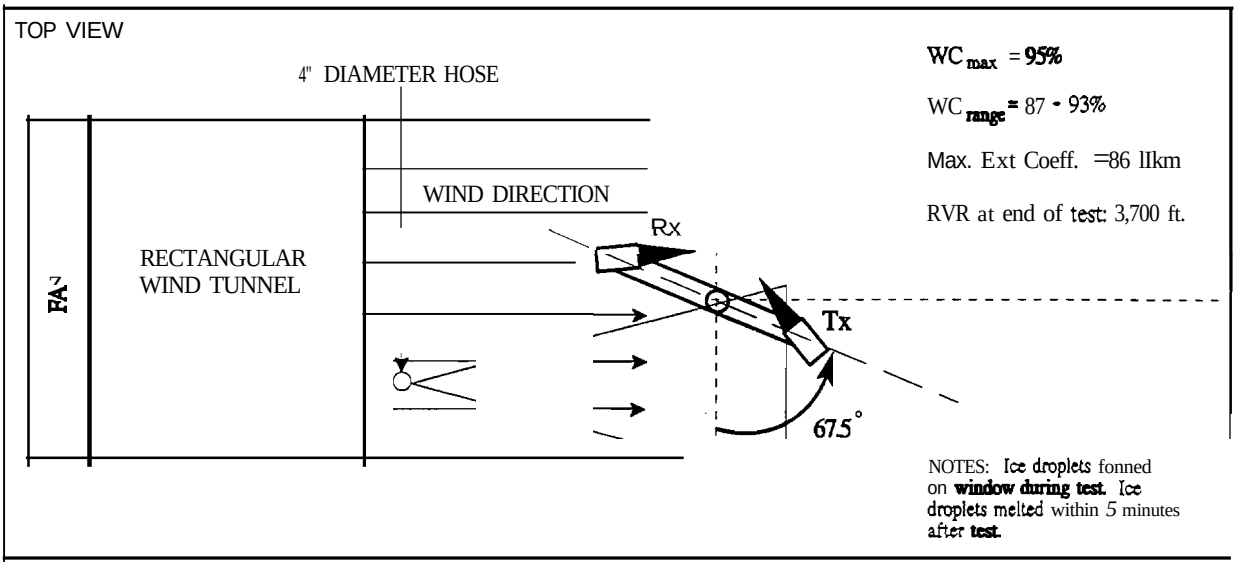

Figure 31 LKDWN VS Blowing Snow Test at 675° (Tx) - Location: ROWPU Chamber

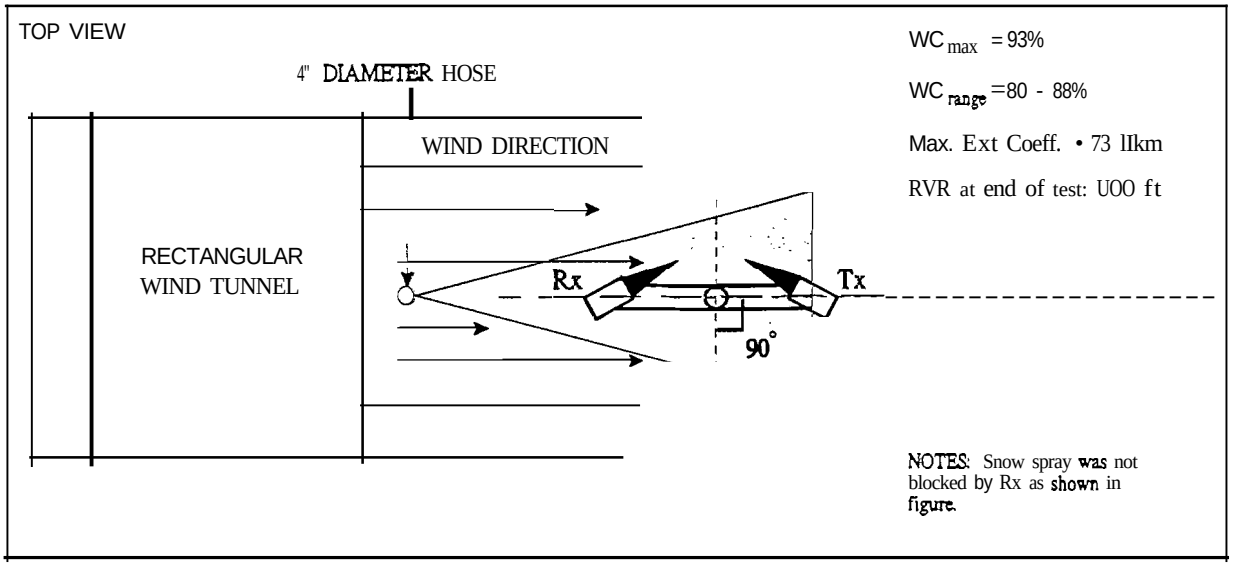

Figure 32. LKDWN VS Blowing Snow Test at 90°(Tx) - Location: ROWPU Chamber

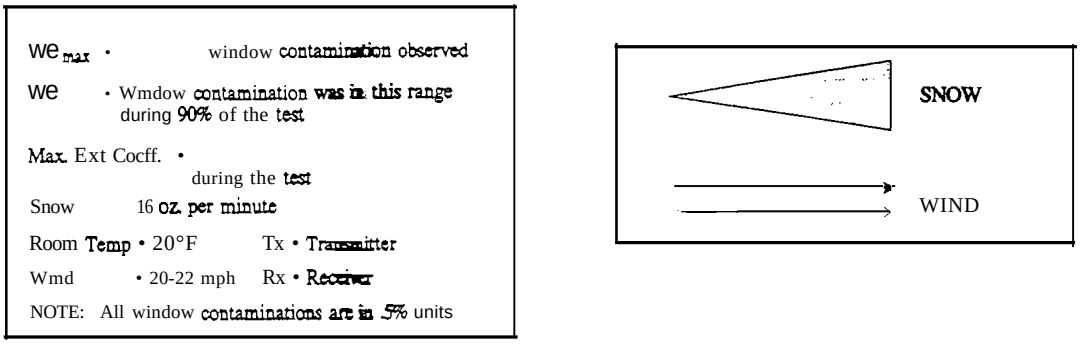

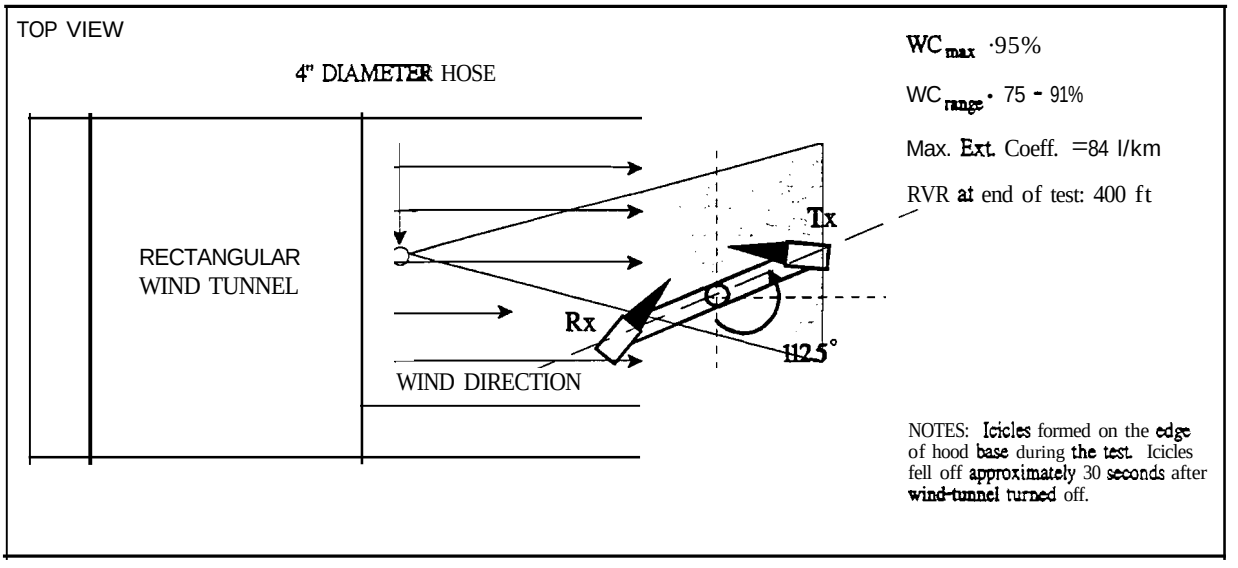

Figure 33. LKDWN VS Blowing Snow Test at 1125°(Tx) - Location: ROWPU Chamber

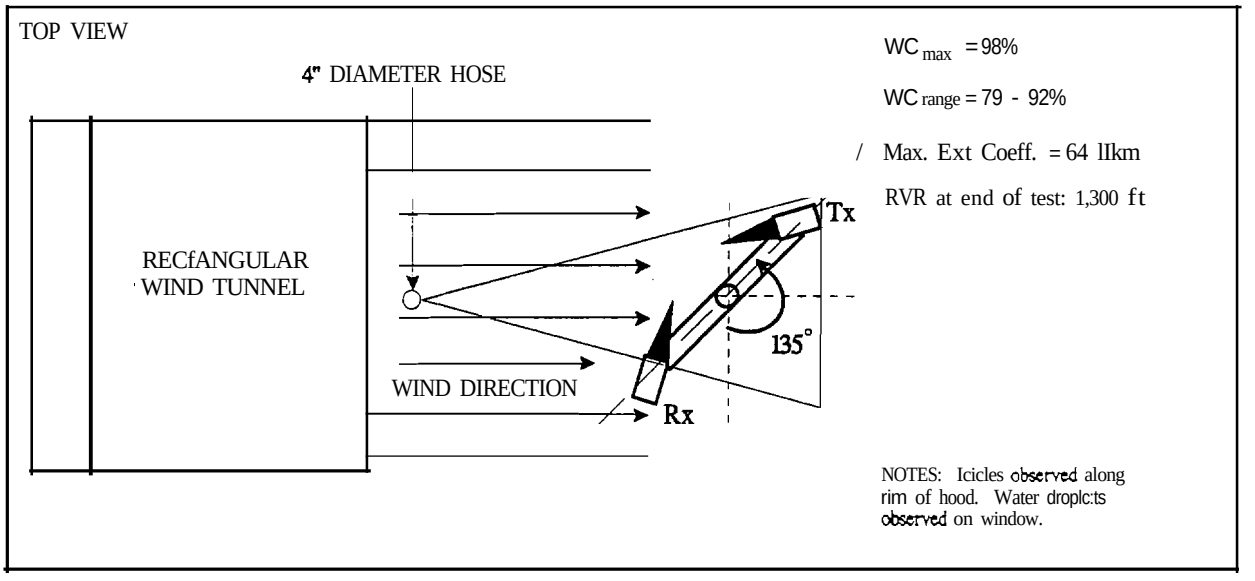

Figure 34. LKDWN VS Blowing Snow Test at 135°(Tx) - Location: ROWPU Chamber

we max • Maximum window contamination observed

we range - Window contamination was in this range during 90% of the test

Max. Ext Coeff. - Highest extinction coefficient observed during the test

Snow Rate: 16 oz. per minute

Room Temp • 20° F Tx • Transmitter

Wind • 20-22 mph Rx' Receiver

NOTE: All window contaminations are in 5% units

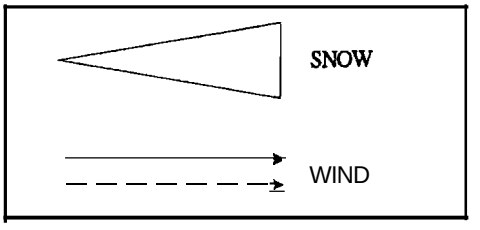

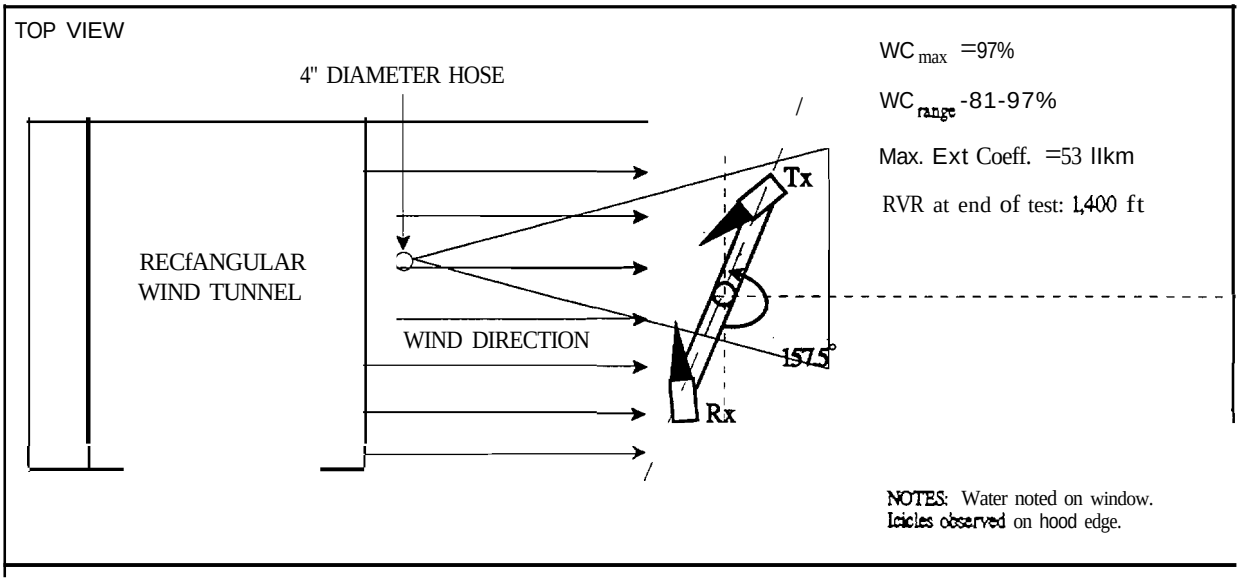

Figure 35. LKDWN VS Blowing Snow Test at 157So(Tx) - Location: ROWPU Chamber

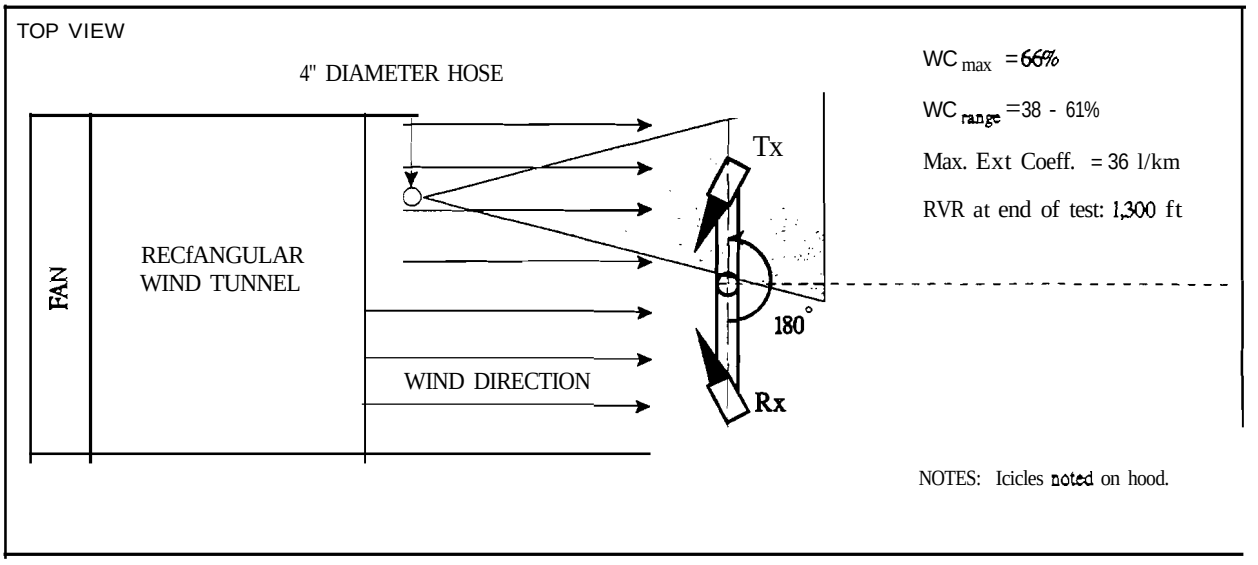

we max · Maximum window contamination observed

we range · Window contamination was in this range during 90% of the test

Max. Ext. Coeff. • Highest extinction coefficient observed during the

Snow Rate: 16 oz. per minute

Room Temp' 20° F Tx • Transmitter

Wind Speed • 20-22 mph Rx' Receiver

NOTE: All window contaminations are in .5% units

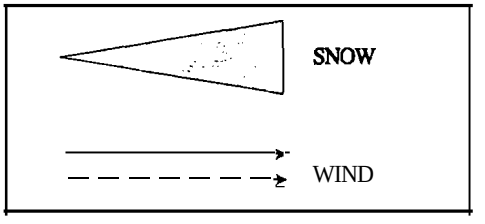

Figure 36. LKDWN VS Blowing Snow Test at 180° (Tx) - Location: ROWPU Chamber

This test was conducted on the Look-Down VS transmitter on August 19, 1993 in the ROWPU Chamber. The test equipment was set up as shown in figures 37 and 38. The chamber temperature was approximately 17° F.

5.2.10.1 Conclusion/Comments.

Window signals were approximately the same with and without the calibration plate. The maximum extinction coefficients were slightly lower with the calibration plate.

5.2.11 High Intensity Blowing Snow Tests.

High Intensity Blowing snow tests were performed on August 23, 1993 in the ROWPU Chamber. The test equipment, setup and results are shown in figures 39 through 45. The snow gun was used to blow large amounts of snow on the sensors. The duration of each test ranged from one minute and forty seconds, to two minutes and forty seconds. In the first test scenario, all three sensors (Look-Down VS, Look-Out VS, ALS) were sprayed simultaneously. In the second scenario, each sensor was sprayed individually. The snow liquid equivalent input rate was 1.2 gallons per minute.

5.2.11.1 Conclusion/Comments.

Results again indicate that the Look-Down VS is much more resistant to snow/ice clogging than the Look-Out VS and the ALS.

5.3 TRANSMITTER AND RECEIVER TEMPERATURE DIFFERENCE MEASUREMENTS.

As stated in paragraph 4.5.3, these tests were designed to show if there were significant temperature differences (e.g., temperatures> 20°) between the Look-Down VS transmitter and receiver. Excessive temperature differences would suggest that the design feature of controlling VS transmitter and receiver heaters from the transmitter may need to be modified.

5.3.1 TX RX Temp Diff Test 1.

TX RX Temp Diff Test 1 was conducted on August 20, 1993 in the ROWPU Chamber. The conduct for this test was as follows:

- The Look-Down VS fork was placed at an initial angle of 0° with respect to wind direction;
- The wind tunnel was activated,
- VS transmitter and receiver temperatures were monitored and recorded each minute until a steady-state temperature was attained;
- The Look-Down VS fork was rotated 22.5° counter clockwise, and
- The procedure was repeated until 90° was traversed.

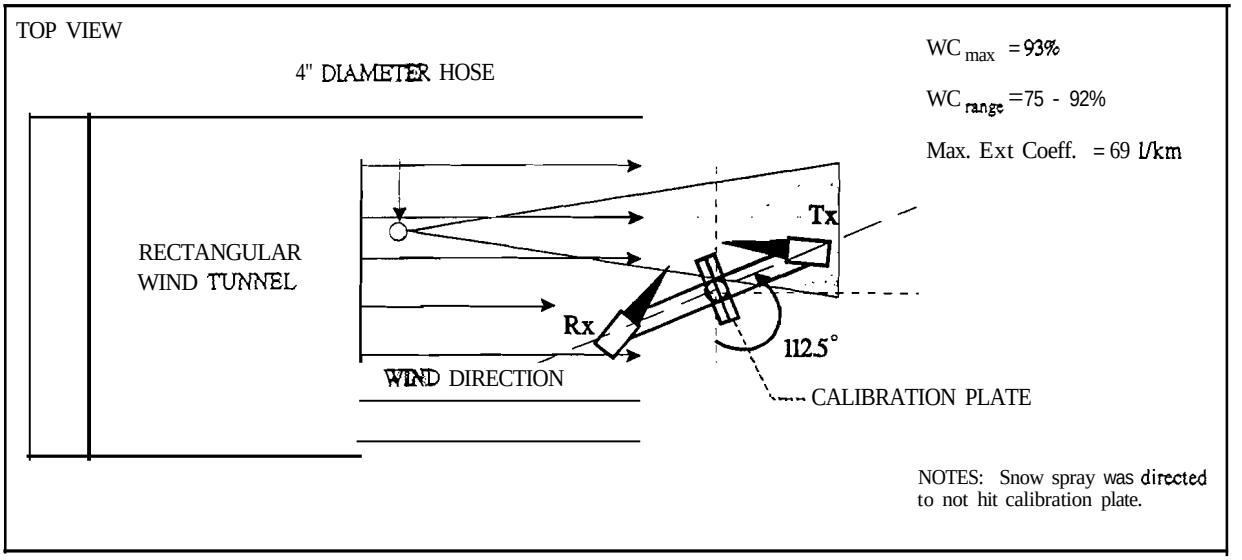

Figure 37. LKDWN VS Blowing Snow Test *wi* Calibration Plate (Tx) at 1125 o_ Location: ROWPU Chamber

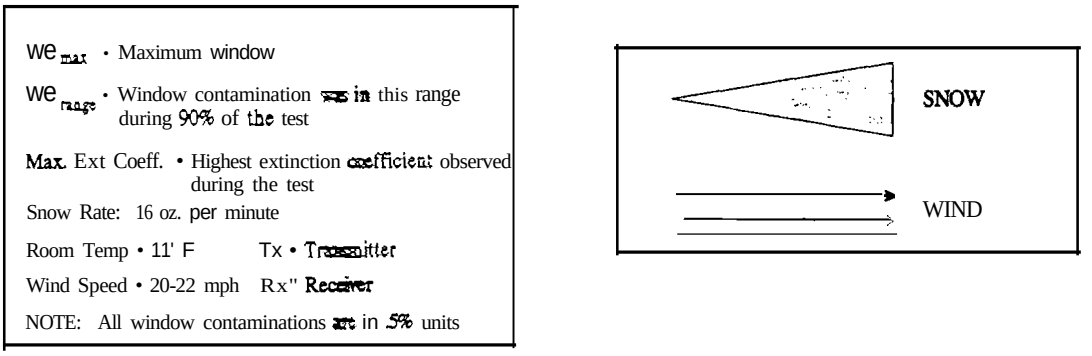

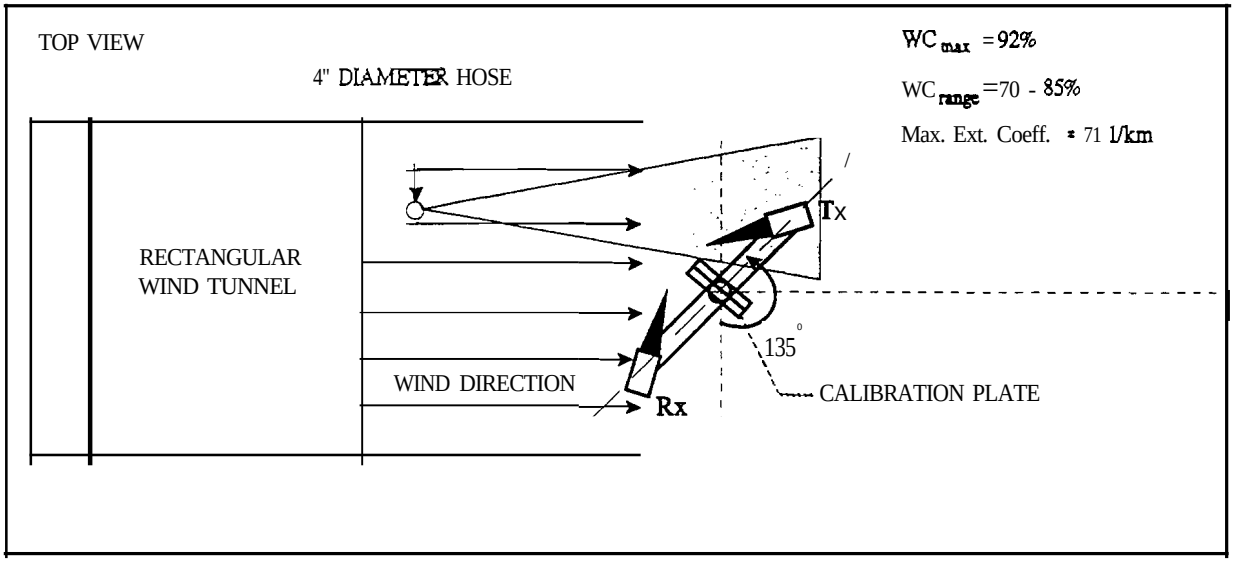

Figure 38. LKDWN VS Blowing Snow Test *wi* Calibration Plate (Tx) at 135°. Location: ROWPU Chamber

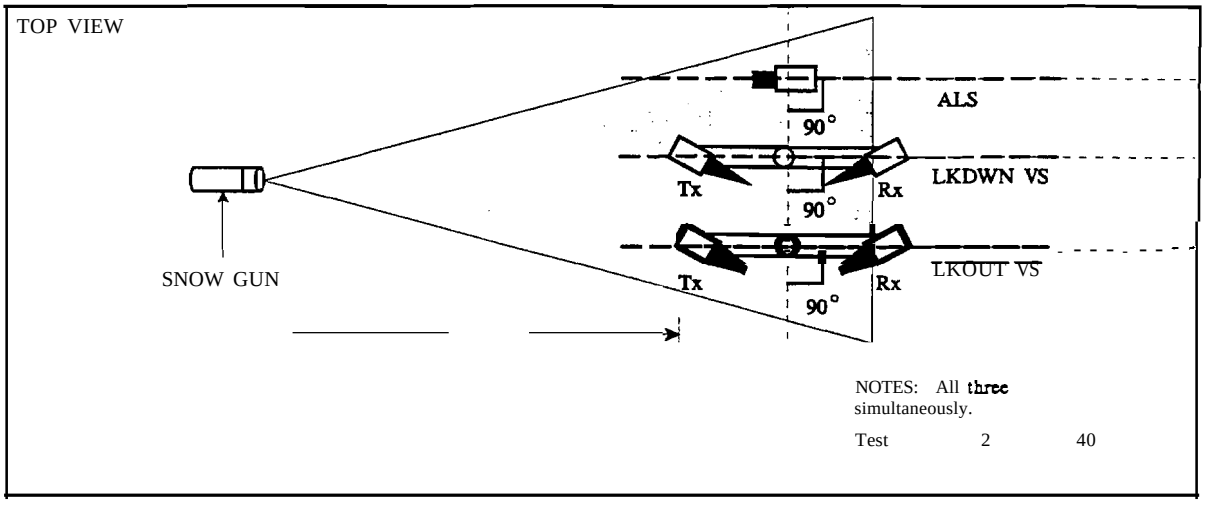

Figure 39. Blowing Snow Test *wi* Snow Gun at 90° - Location: ROWPU Chamber

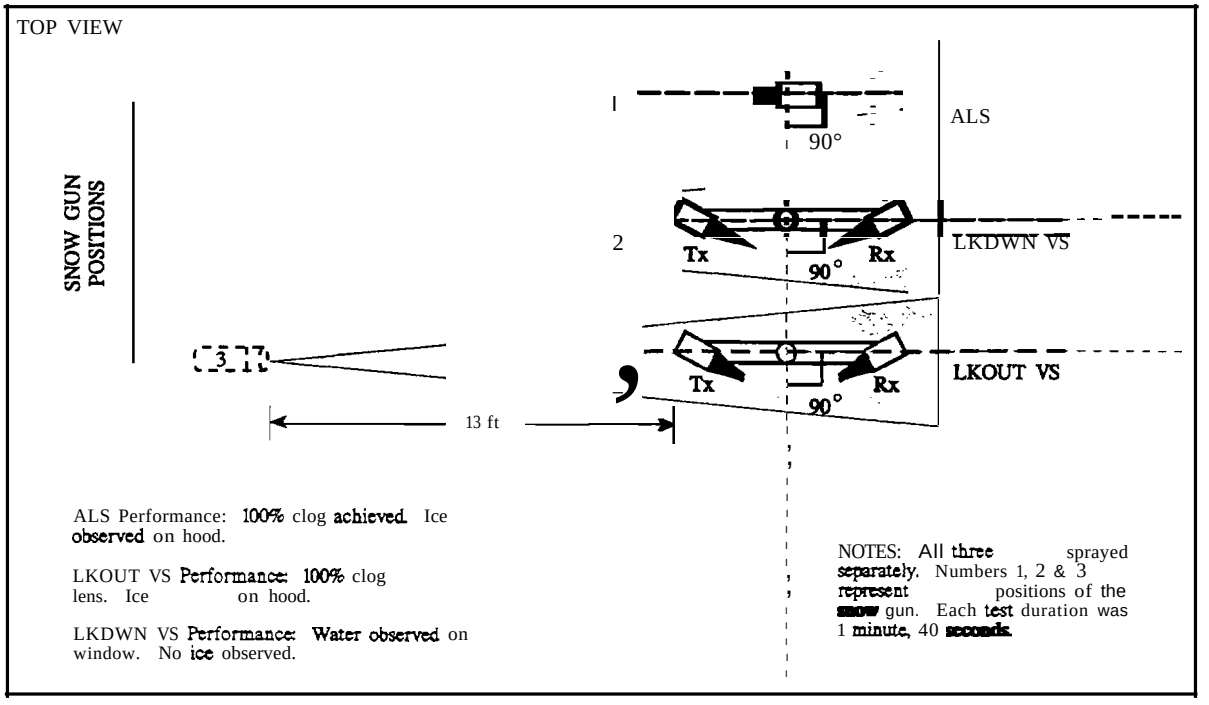

Figure 40. Blowing Snow Test *wi* Snow Gun at 90° - Location: ROWPU Chamber

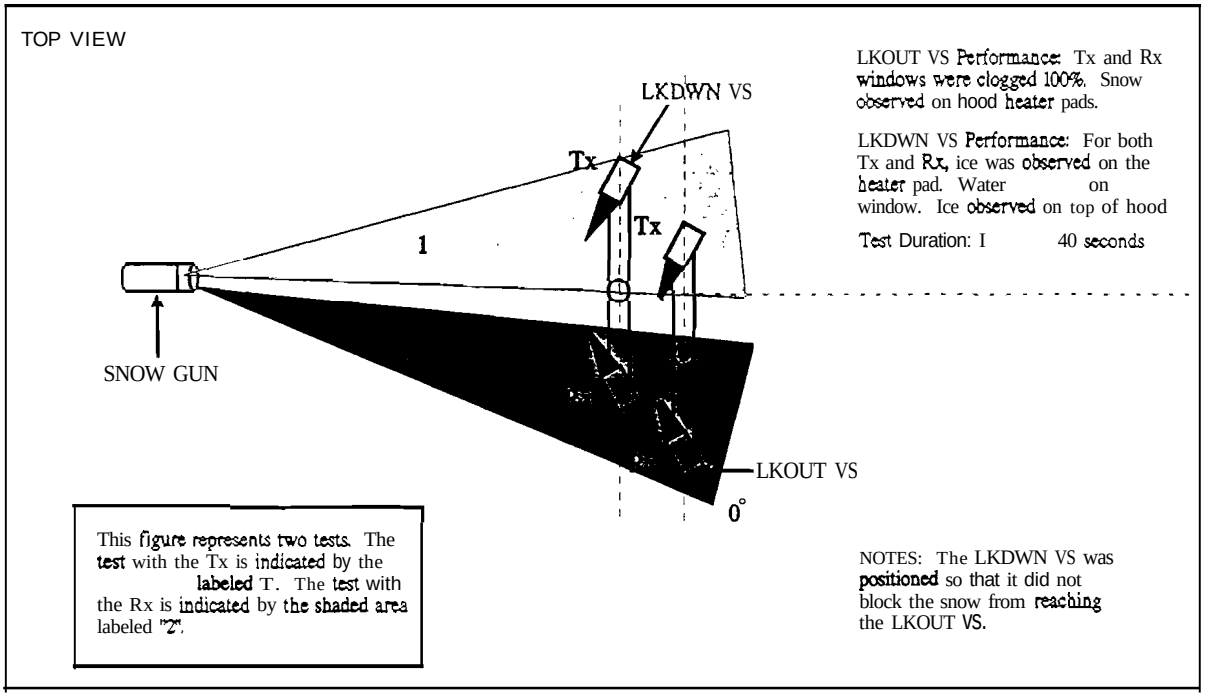

Figure 41. Blowing Snow Test *wi* Snow Gun (Rx & Tx) at 0°_ Location: ROWPU Chamber

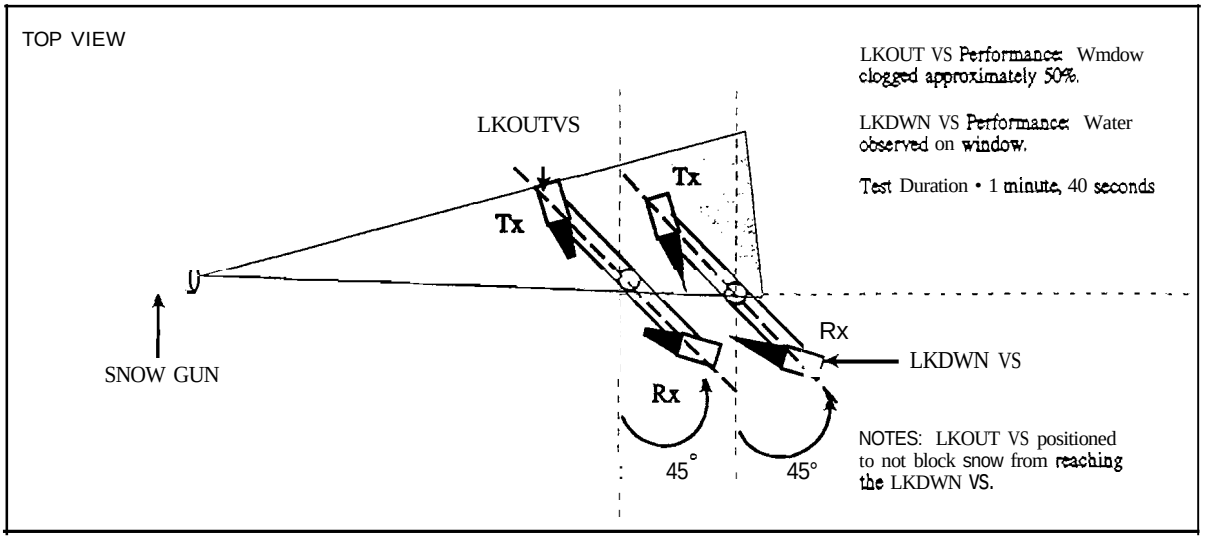

Figure 42 Blowing Snow Test *wi* Snow Gun (Tx) at 45°_ Location: ROWPU Chamber

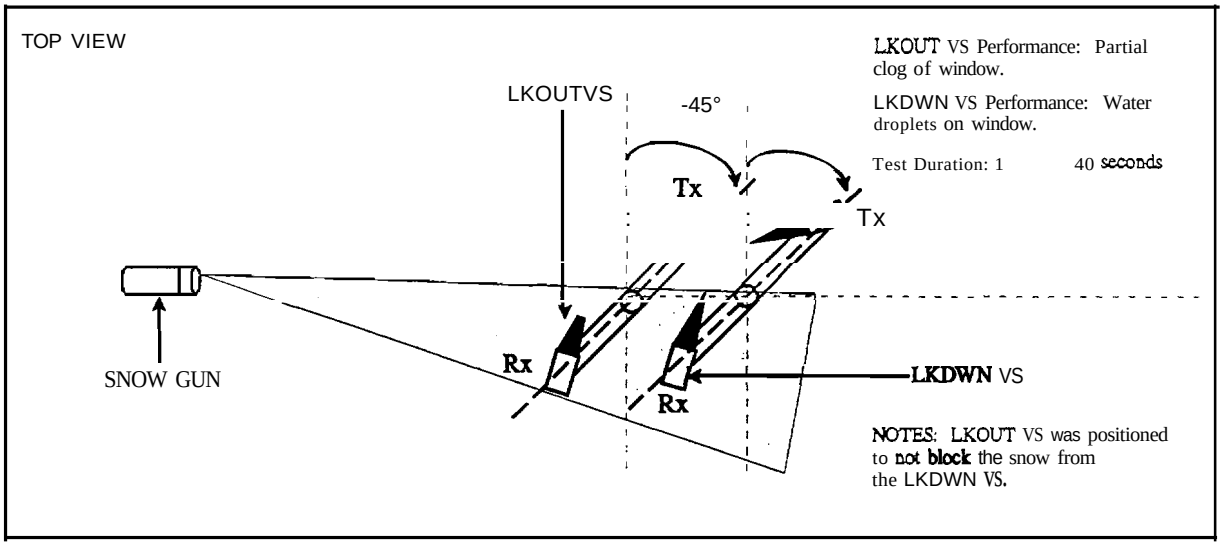

Figure 43. Blowing Snow Test *wi* Snow Gun (Rx) at -45°- Location: ROWPU Chamber

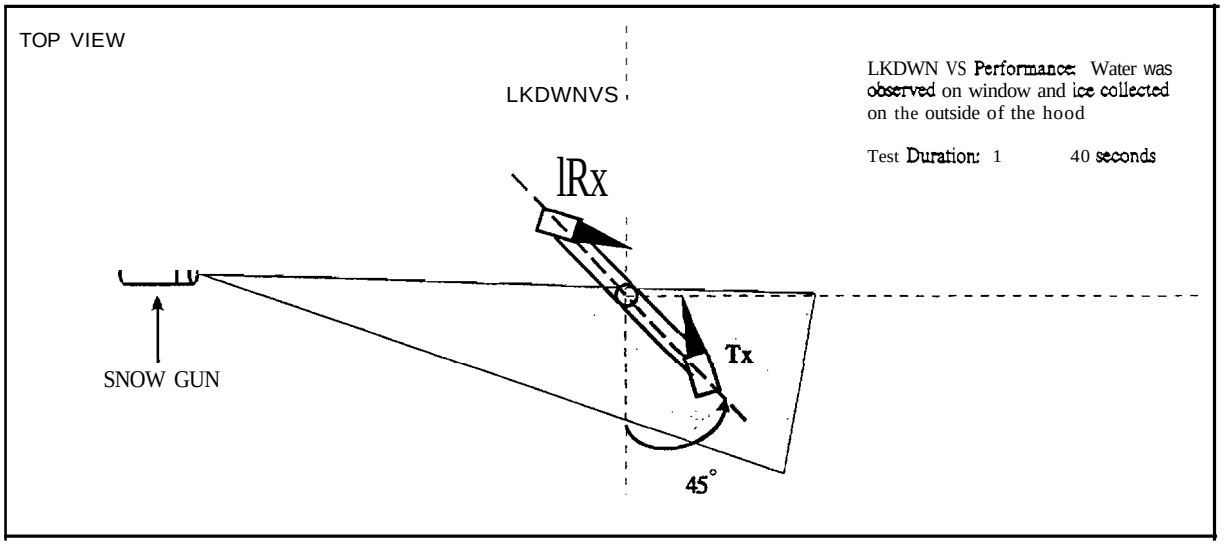

Figure 44. Blowing Snow Test *wi* Snow Gun (Tx) at 45 o_ Location: ROWPU Chamber

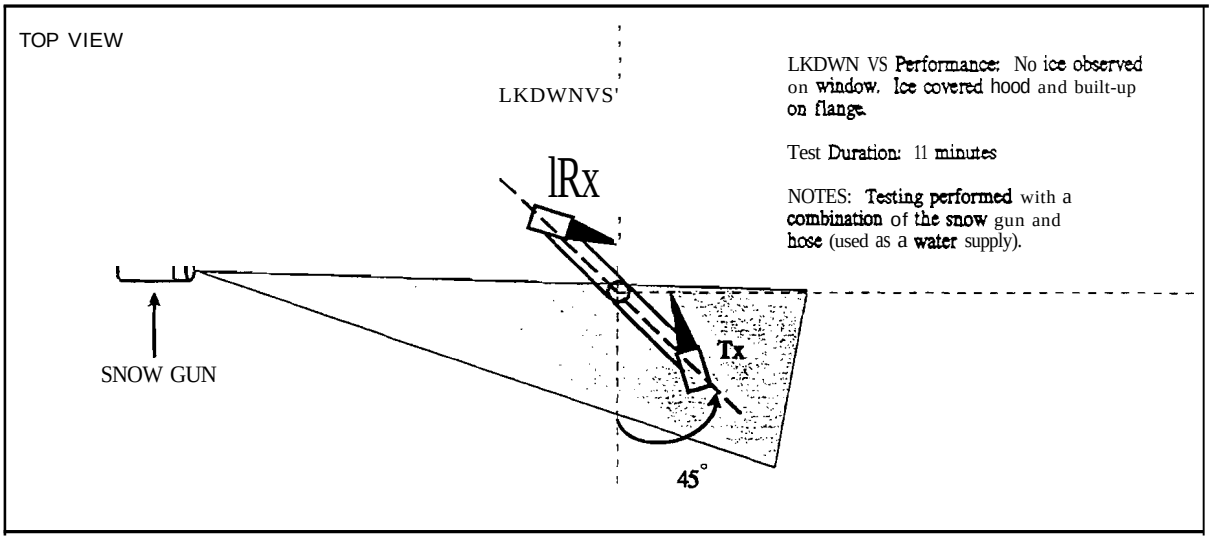

Figure 45. Blowing Snow Test *wi* Snow Gun (Tx) at 45°. Location: ROWPU Chamber

Figures 46 through 5S detail the test setup and results. Other test parameters included the following:

- Chamber temperature of the -5.8° F, and
- Wind tunnel air speed ranging from 20 to 22 mph.

5.3.1.1. Conclusion/Comments.

The results suggest that the largest transmitter and receiver temperature differences occur with wind directions that are angular with respect to the sensor fork axis. During the larger temperature differences (e.g. approximately 9° F with 20 mph winds), the receiver is warmer than the transmitter and hence, is protected against icing/clogging without its heater activated.

As long as the receiver remains warmer than the transmitter near freezing temperatures. controlling both heaters from transmitter thermocouples appears to present no problems that could lead to VS icing/clogging without heater activation.

5.3.2 TX RX Temp Diff Test 2.

TX RX Temp Diff Test 2 was conducted on August 23, 1993 in the ROWPU chamber. This test compared hood temperature of the VS for both the look-down and look-out configurations. Figure 56 details the test setup and results. Figure 57 indicates the results in graphical form. Other test parameters included the following:

- Test duration of 10 minutes, and
- Wind tunnel air speed of 22 mph.

5.3.2.1 Conclusion/Comments.

Small differences (i.e., within 2°) between the look-down and look-out prototype suggest that the change in design configuration has little or no impact on the sensor temperature profile.

As the results of TX RX Temp Diff Test 1 suggest, wind directed perpendicularly towards the sensor fork axis appears to cause the least temperature difference between the transmitter and receiver.

Although separate transmitter and receiver heater controls could optimize sensor performance in terms of power conservation, the results indicate that the transmitter and receiver temperature differences are small. Hence, a change in heater control scheme based solely on transmitter and receiver temperature differences is not warranted.

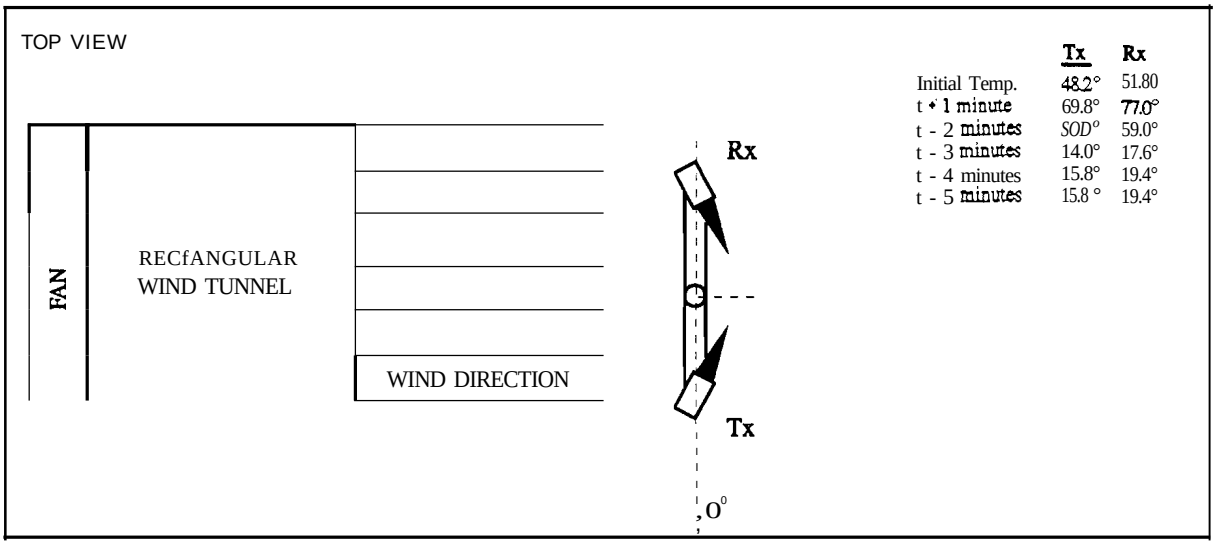

Figure 46. TX RX Temp Diff Test 1 at 0°-Location: ROWPU Chamber

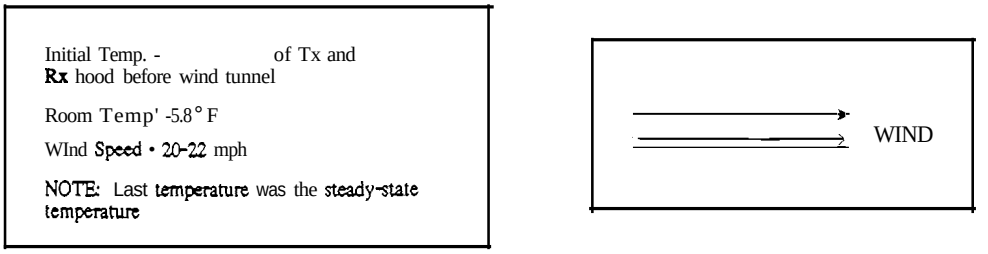

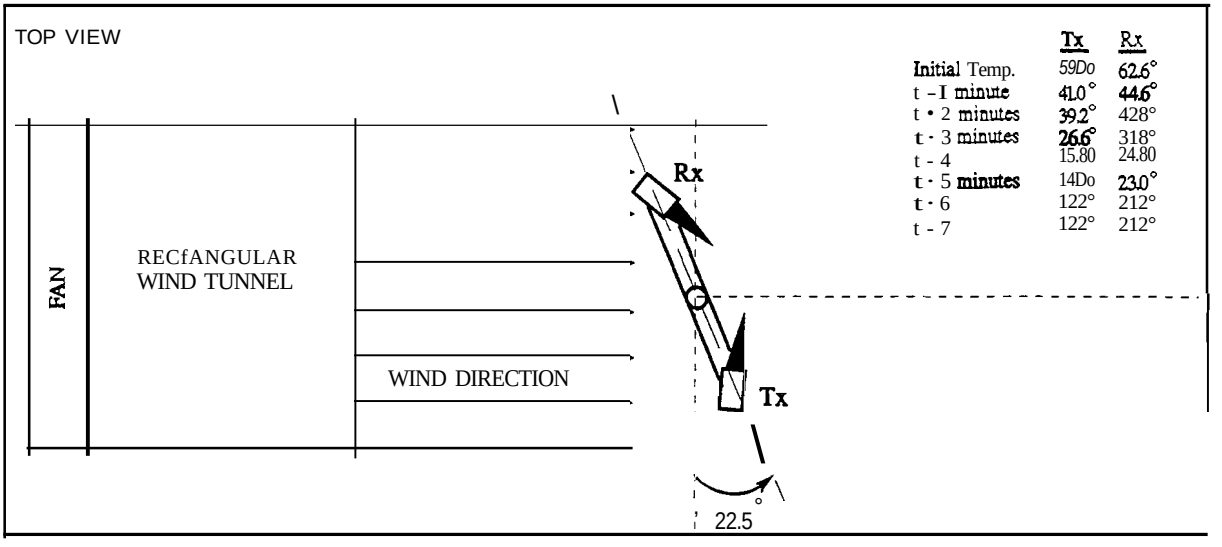

Figure 47. TX RX Temp Diff Test 1 at 225°. (Rx Closer to Fan) - Location: ROWPU Chamber

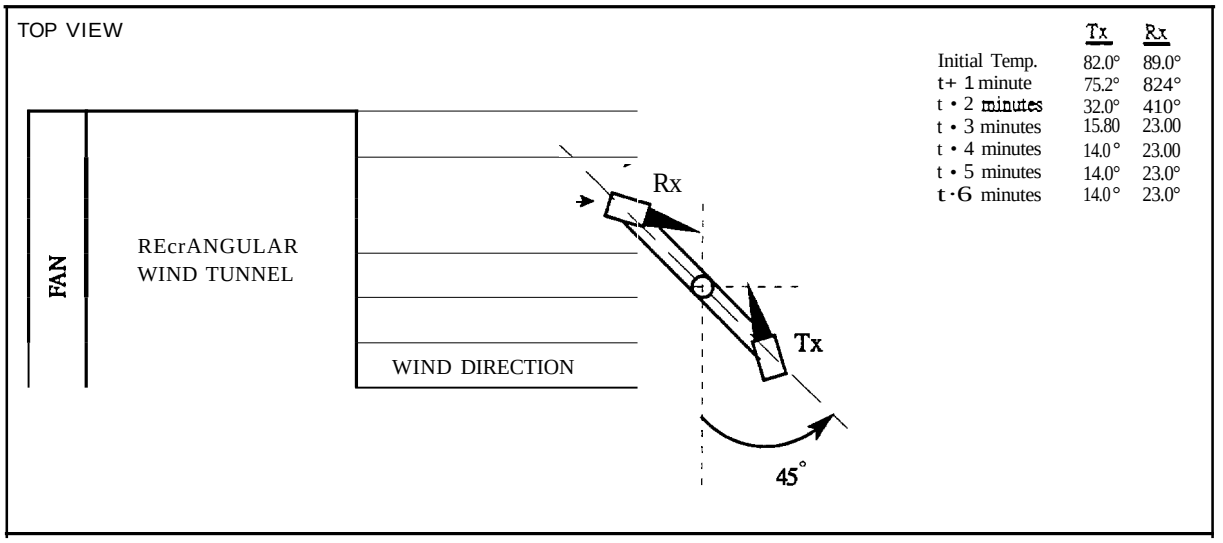

Figure 48. TX RX Temp Diff Test 1 at 45° (Rx Closer to Fan) - Location: ROWPU Chamber

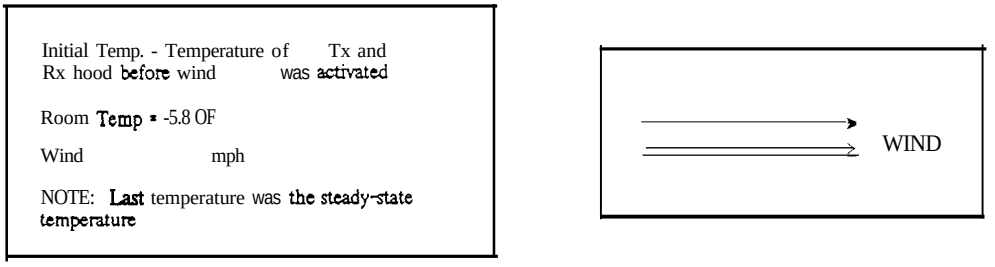

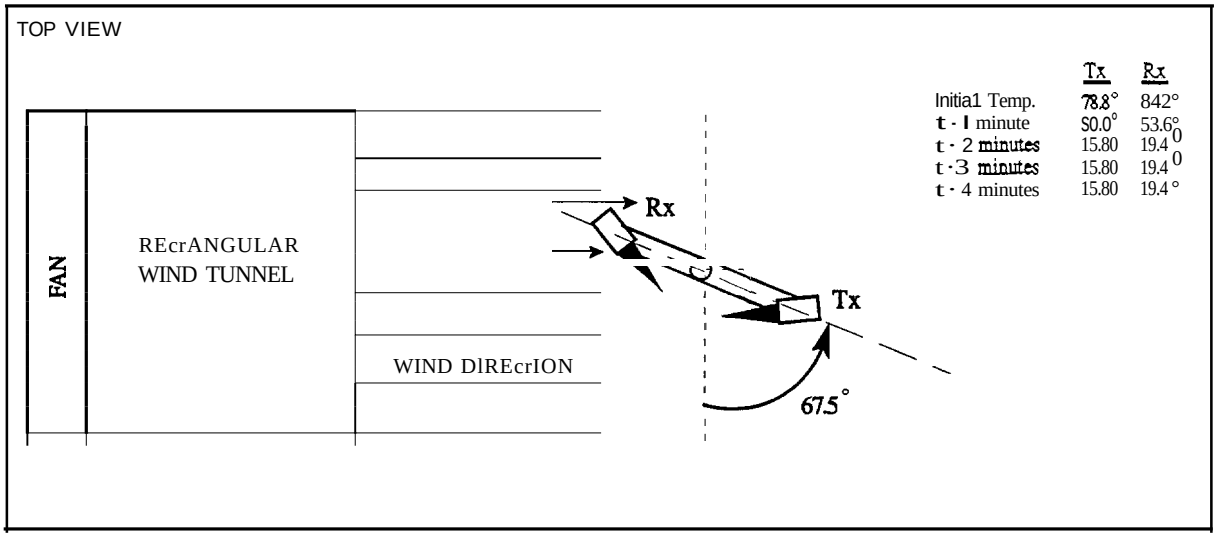

Figure 49. TX RX Temp Diff Test 1 at 67.5° (Rx Closer to Fan) - Location: ROWPU Chamber

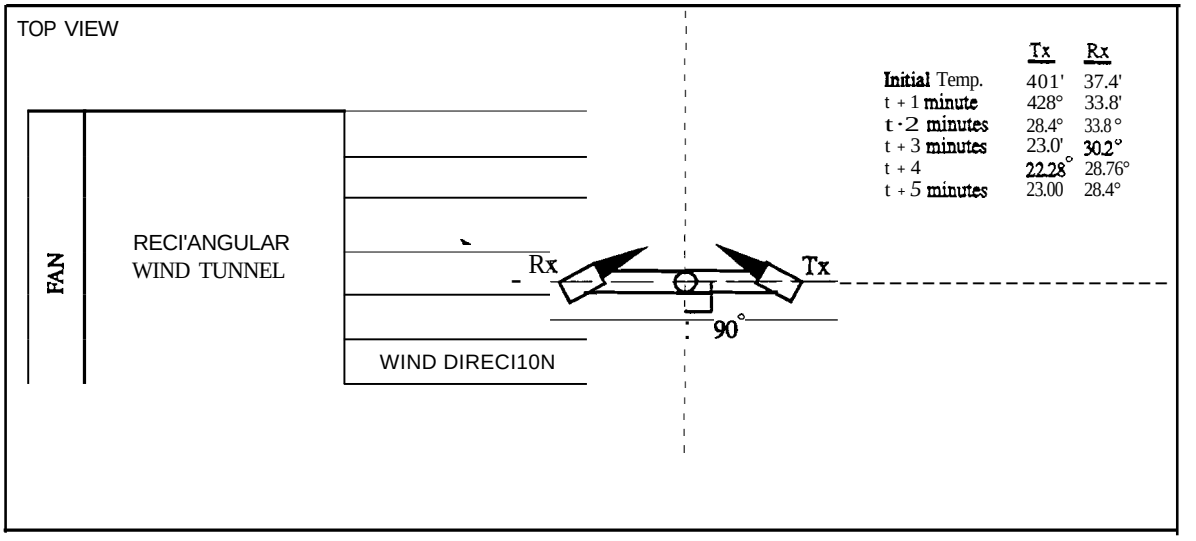

Figure 50. TX RX Temp Diff Test 1 at 90° (Rx Closer to Fan) - Location: ROWPU Chamber

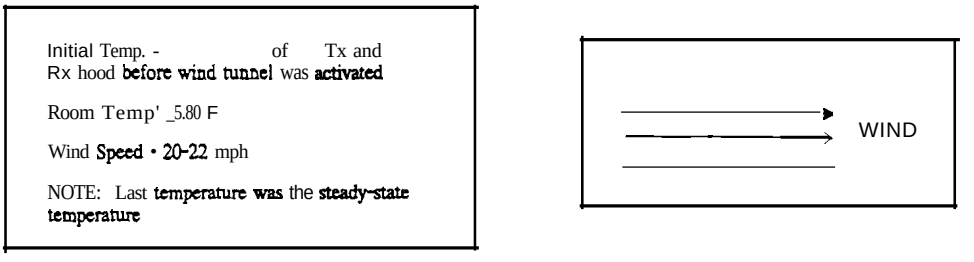

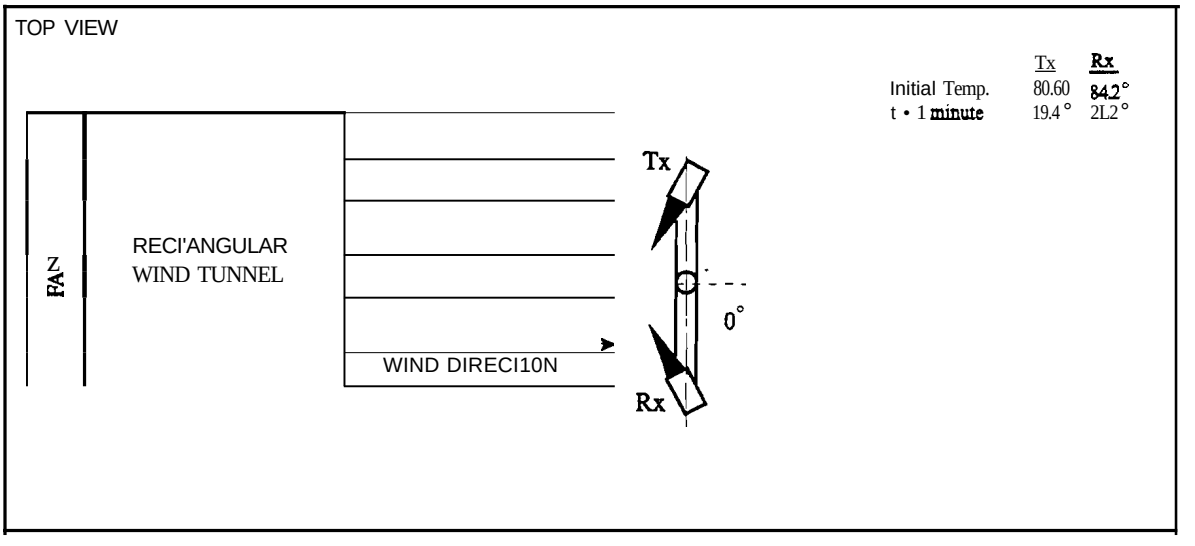

Figure 51 TX RX Temp Diff Test 1 at 0°- Location: ROWPU Chamber

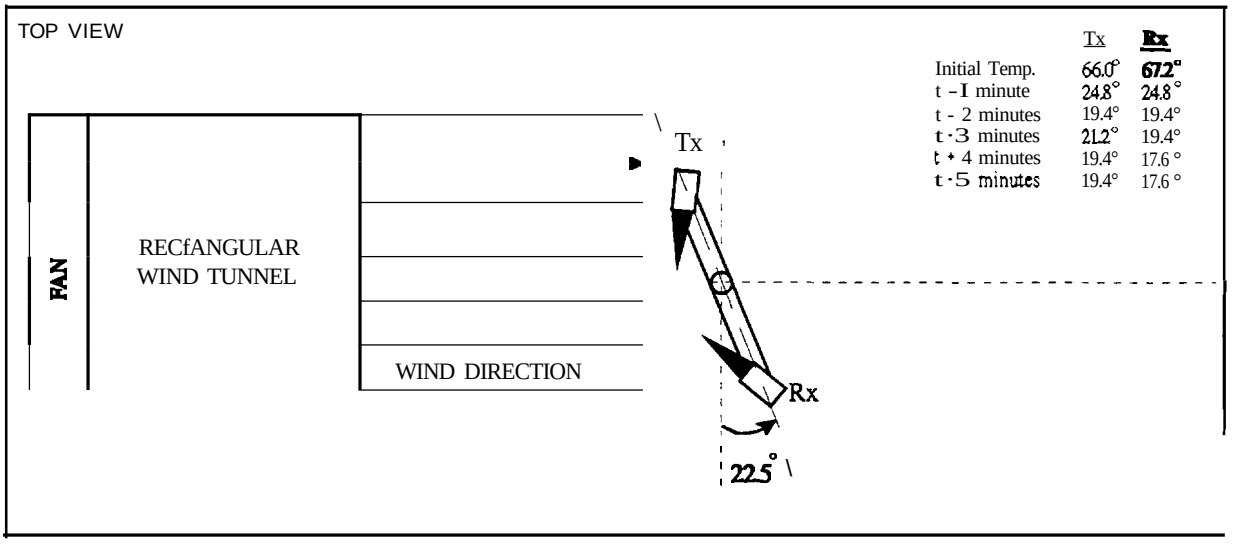

Figure 52. TX RX Temp Diff Test 1 at 225°(Tx Closer to Fan) - Location: ROWPU Chamber

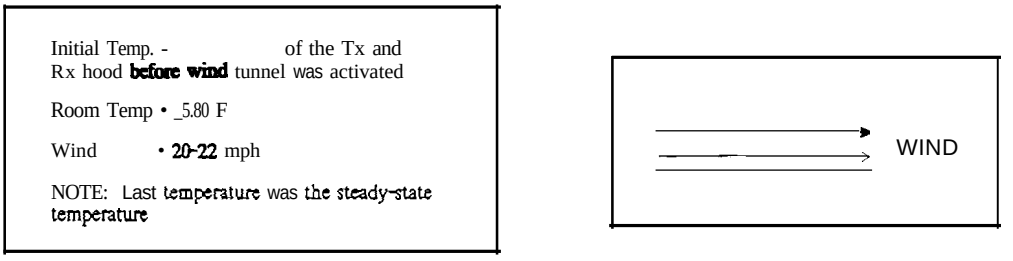

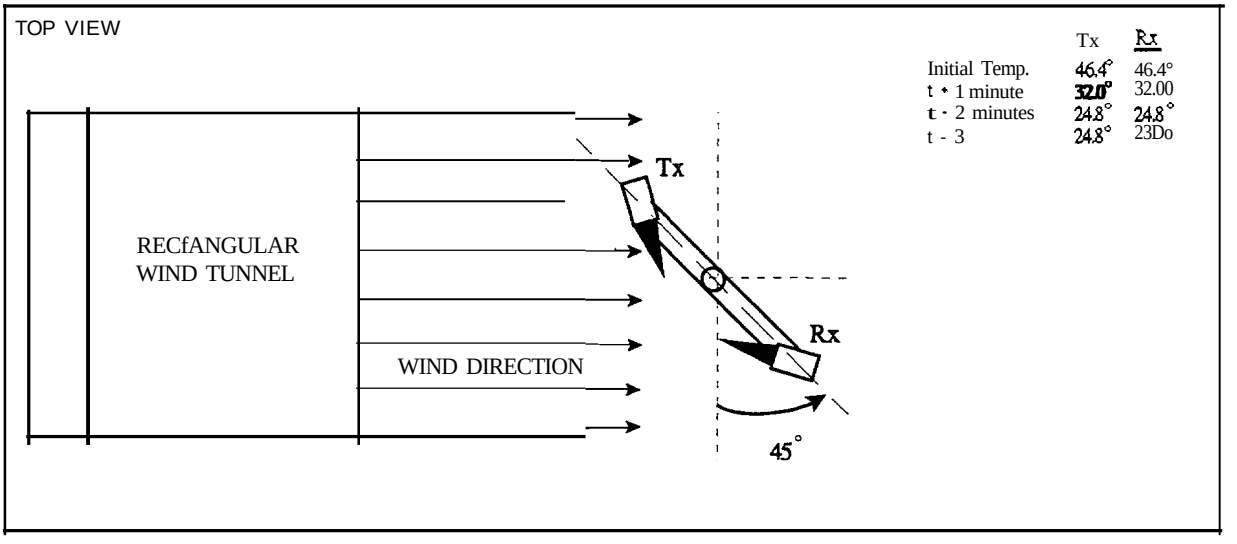

Figure 53. TX RX Temp Diff Test 1 at 45°(Tx Closer to Fan) - Location: ROWPU Chamber

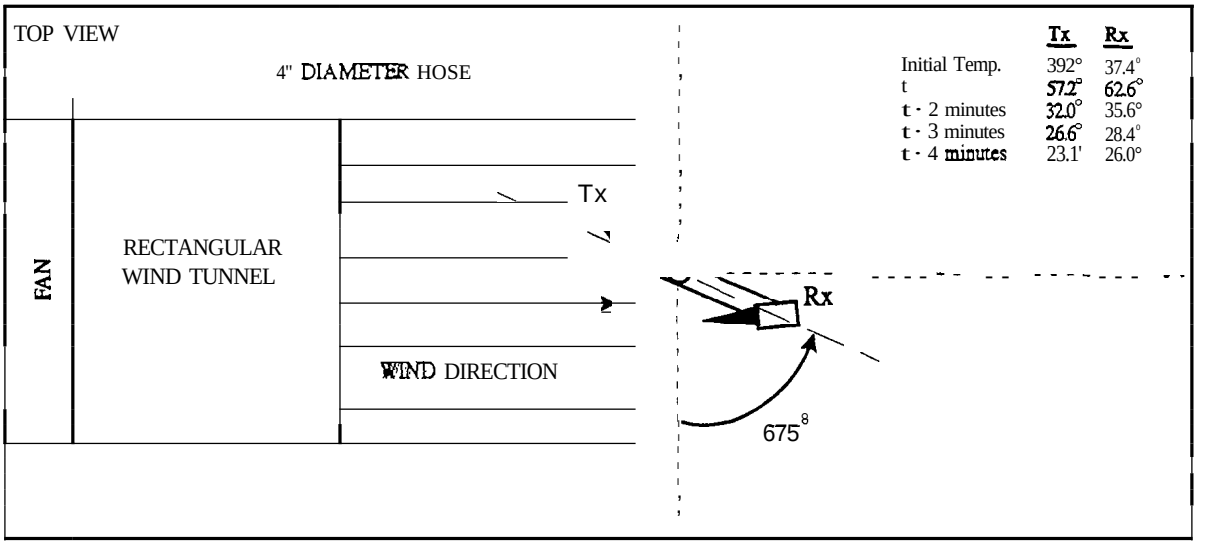

Figure 54. TX RX Temp Diff Test at 675° (Tx Closer to Fan) - Location: ROWPU Chamber

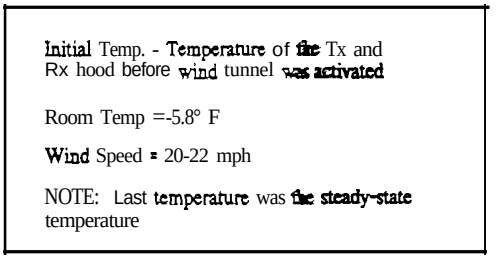

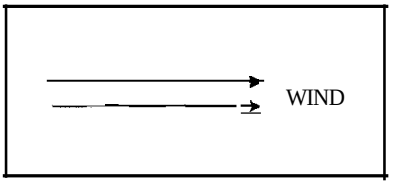

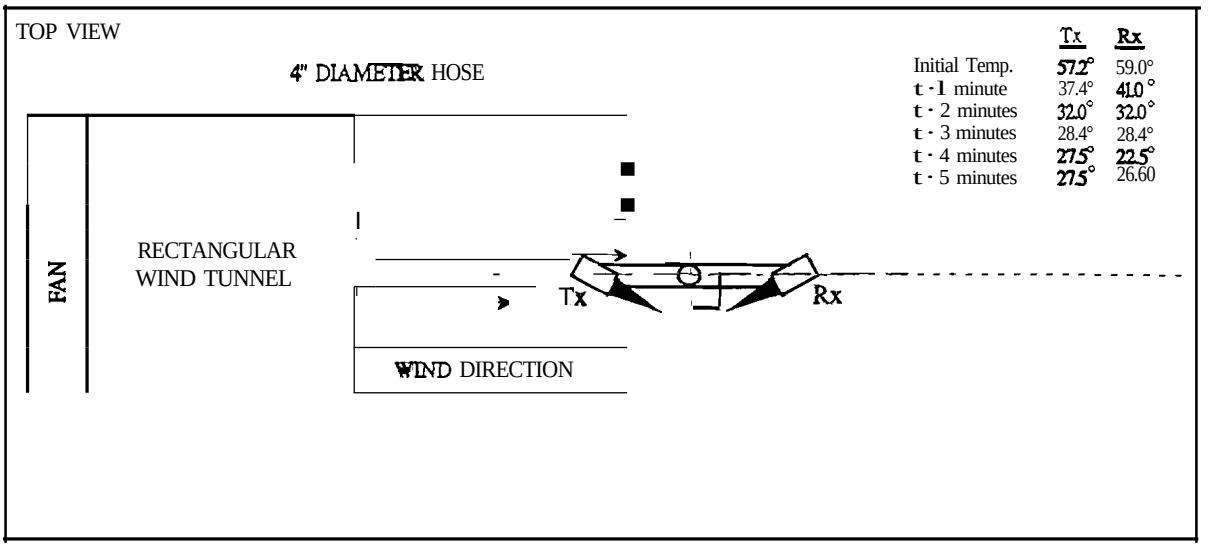

Figure 55. TX RX Temp Diff 1 at 90° (Tx Closer to - Location: ROWPU Chamber

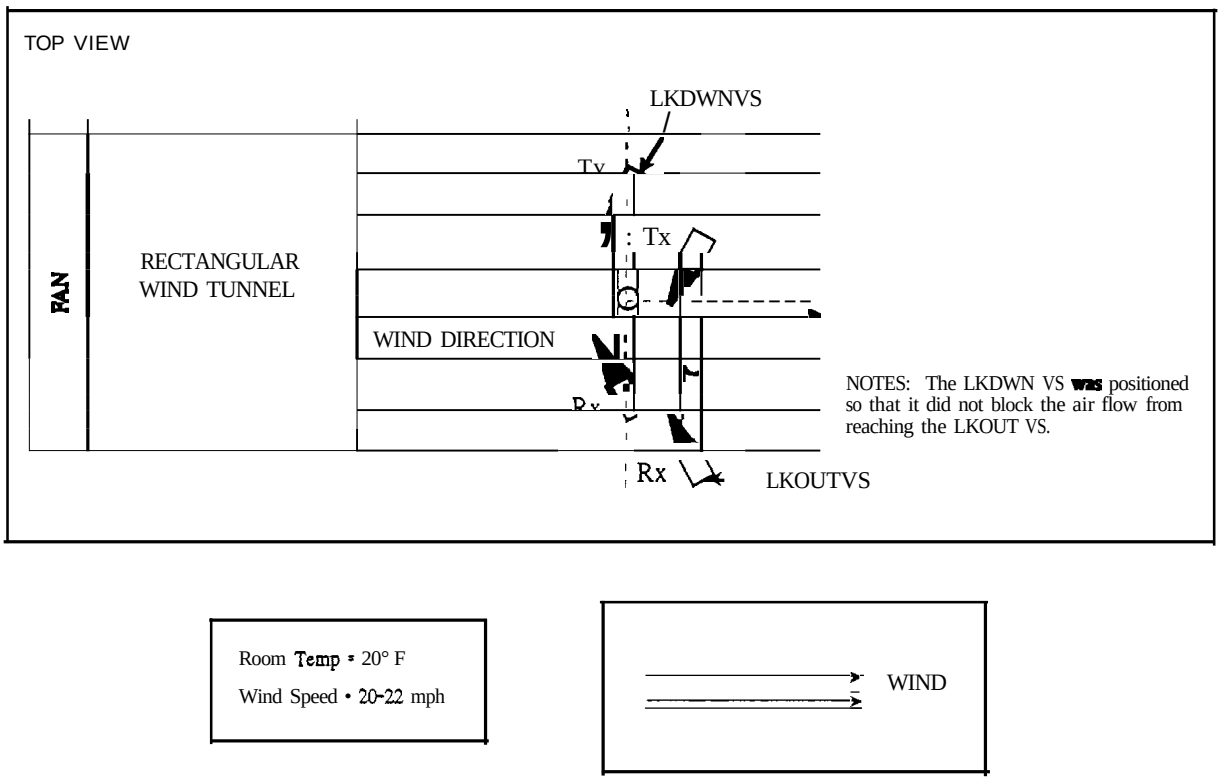

Figure 56. TX RX Temp Diff Test 2 - Location: ROWPU Chamber

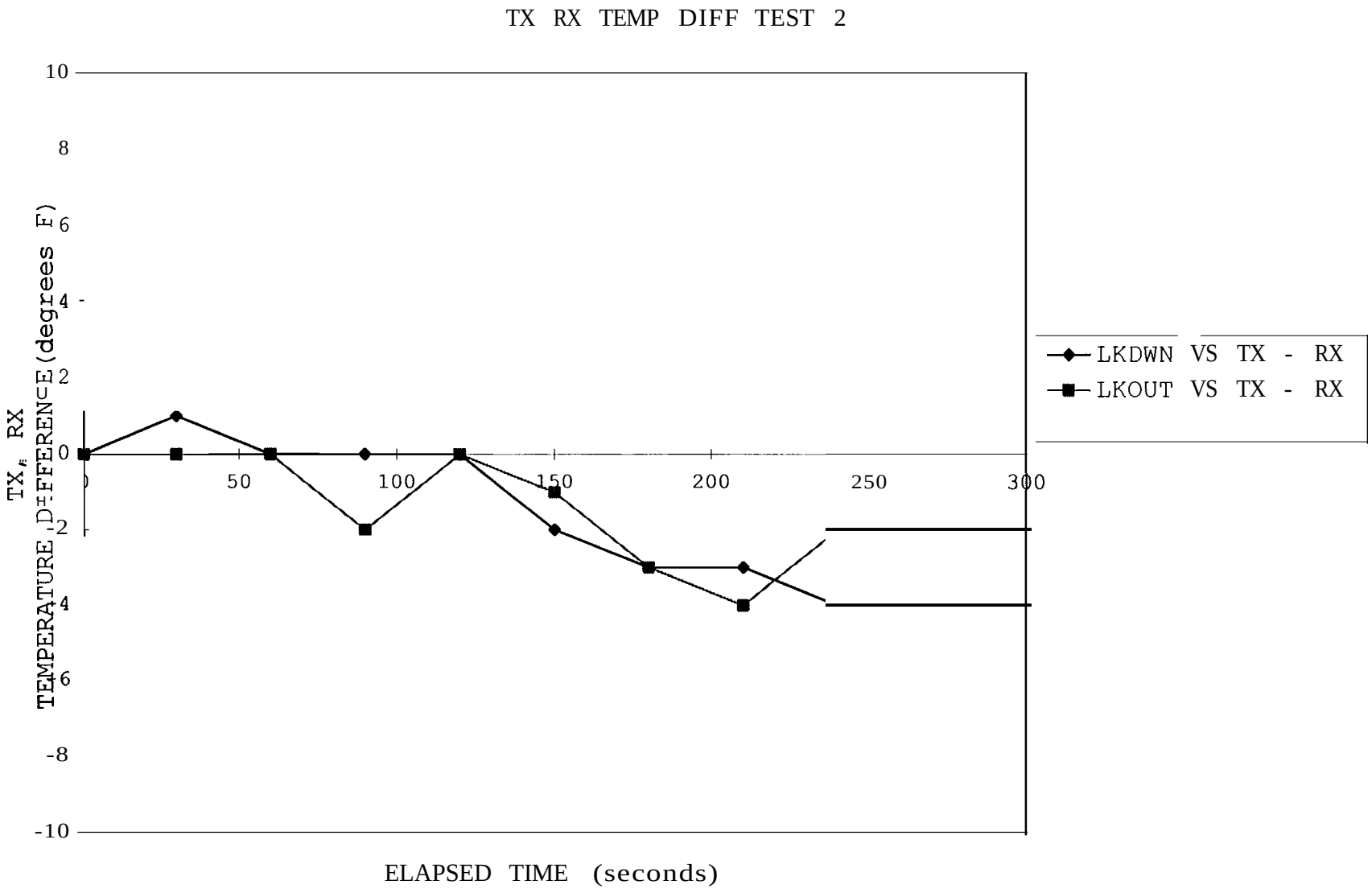

Figure 57. TX RX TEMP DIFF

5.4 DE-ICE HEATER CONTROL TESTS.

As discussed in paragraph 4.5.4, a potential enhancement for the Look-Down VS was additional control of its window or de-ice heater to prevent dry snow from attaching to sensor components. These tests were designed to determine if "strategic" de-ice heater controls could increase the sensors resistance to clogging and at what temperatures should the controls be implemented. strategic in this context refers to deactivating the de-ice heaters when precipitation would naturally bounce off sensor components instead of attaching to an otherwise warmer surface.

Two de-ice heater control tests were performed. Each test consisted of two parts; one which determined the sensors snow clogging rate[10] and one which revealed sensor performance without the de-ice heater. Testing was performed at two temperatures to aid determining an optimum temperature at which the VS de-ice heater should be deactivated[11]. For both tests, snow direction was determined by the angle in which the sensor appeared to be most susceptible to high window signals and clogging. Based on the Angular Blowing Snow Test results, this angle was 135°.

5.4.1 De-Ice Heater Test 1.

5.4.1.1 Performance with De-Ice Heater.

This test was conducted on August 21, 1993 in the ROWPU Chamber. Snow was directed at the transmitter from a 135° angle as shown in figure 58. Other test parameters included the following:

- Chamber temperature of 1.4° F;
- Wind tunnel air speed ranging from 20 to 22 mph; and
- Snow rate was 48 ounces per minute.

5.4.1.1.1 Conclusion/Comments.

Although a significant clog (i.e. 80% of the VS window was covered with snow and/or ice) was attained after 10 minutes had elapsed, the de-ice heater appeared able to prevent a total clog of the VS window. Hence, the snow clogging rate for this test was determined to be established.

---

10 Snow clogging rate was defined as the snow rate where the de-ice heater was just able to melt the accumulation of snow on the VS window.

11 These tests were also performed with the look-out configuration and the ALS.

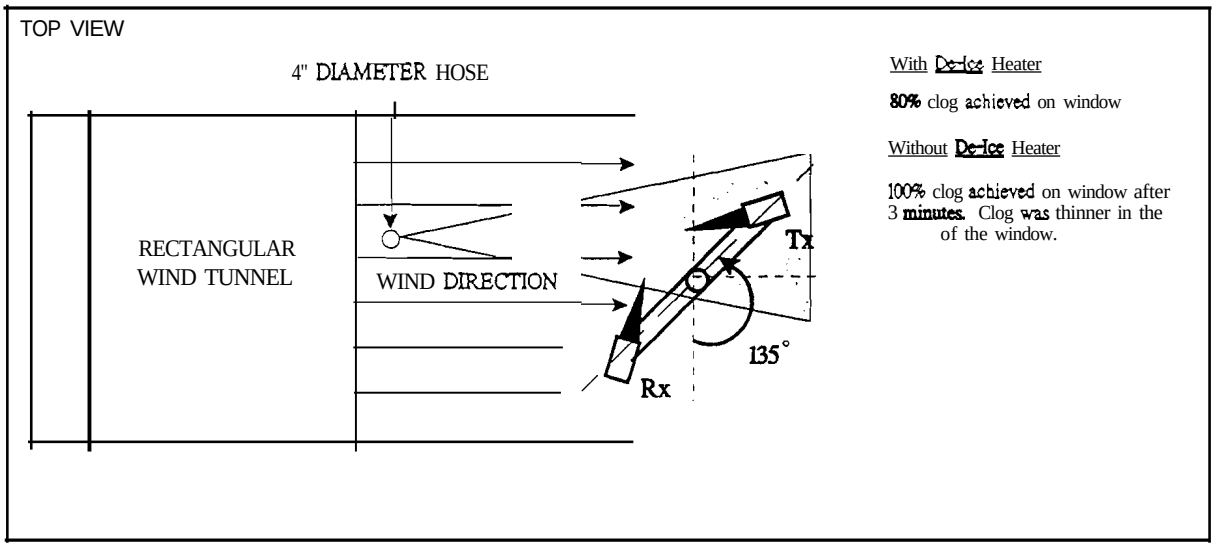

Test 1 Room Temp. • 1.4° F
Wind Speed • 20-22 mph
Snow Rate: 48 oz. per minute
Tx •
Rx • Receiver

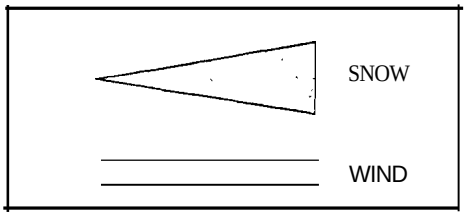

Figure 58. De-Ice Heater Test 1 at 135° (Tx) - Location: ROWPU Chamber

Despite a significantly slower snow rate (16 oz./min. vs. 48 oz./min.), performance parameters such as window signal readings appeared to match levels attained during previous blowing snow tests.

since the VS window was covered with snow and ice, the next step in the test involved clearing the window and disabling the de-ice heater. The de-ice heater was effectively deactivated by grounding a comparator circuit (component LNlll) residing within the sensors electronic control circuitry.

5.4.1.2 Performance without De-Ice Heater.

De-Ice Heater Test 1 continued with a deactivated de-ice heater and the snow rate used in part 1 of the test. However, a small change in temperature presented a problem for the second part of this test. Inadvertently, the chamber temperature had decreased to -2.2° F before starting this sequence. Due to the difficulties previously encountered in making small temperature changes within the large chamber, no attempt was made to return the temperature to its initial reading.

5.4.1.2.1 Conclusion/Comments.

VS window clogging began noticeably sooner without the de-ice heater. Furthermore, a larger clog was achieved (100% vs. 80%), and in much quicker time (3 minutes vs. 10 minutes) than with a functioning de-ice heater. Window signal levels reaching 167% --, also indicated that sensor performance had degraded without use of the de-ice heater.

Due to the obvious degradation in performance, testing was halted after 5 minutes. Although most performance benchmarks seemed to indicate that the two temperatures (-2.2° F and 1.4° F) were not ideal for disabling the de-ice heater, one observation suggested that the optimum temperature was near.

A larger clog was formed more quickly than in part 1 of the test, but, this clog was noticeably thin (ref. photo 6) in the center of the window. This same "donut" clog formation was observed in test results with the look-out configuration VS and the ALS (ref. photo 7), although an even larger percentage of the window was clear in those results.

The fact that a larger clog was formed suggests that the de-ice heater should not be disabled at 1.4°, despite the inadvertent drop in chamber temperature. However, a repeat of this test at a constant temperature would most likely result in less performance degradation with a deactivated de-ice heater.

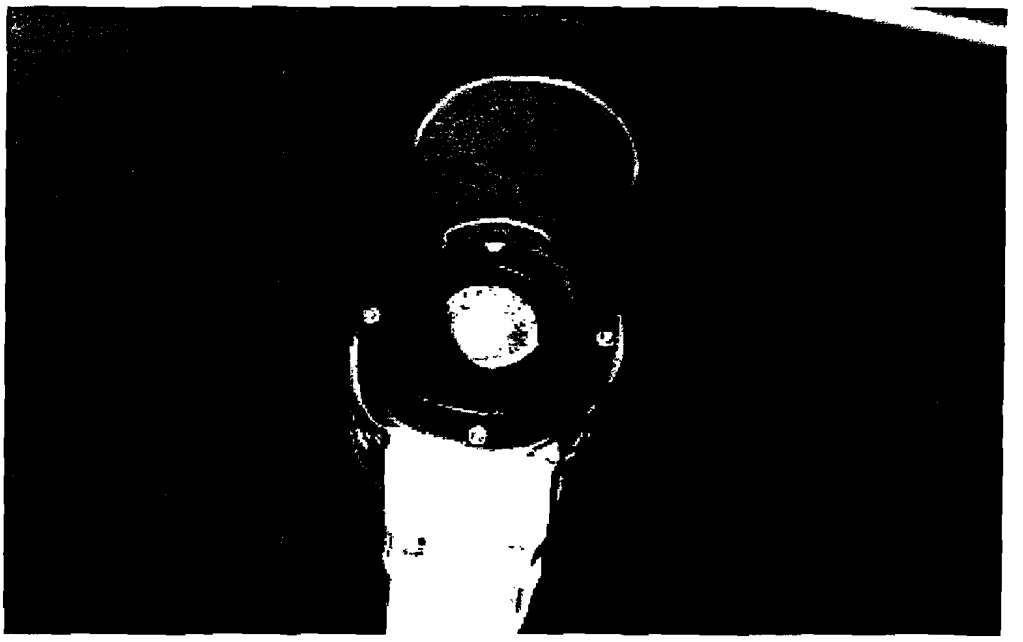

PHOTO 6. LOOK-DOWN VS SNOW CLOG "THIN" AT CENTER

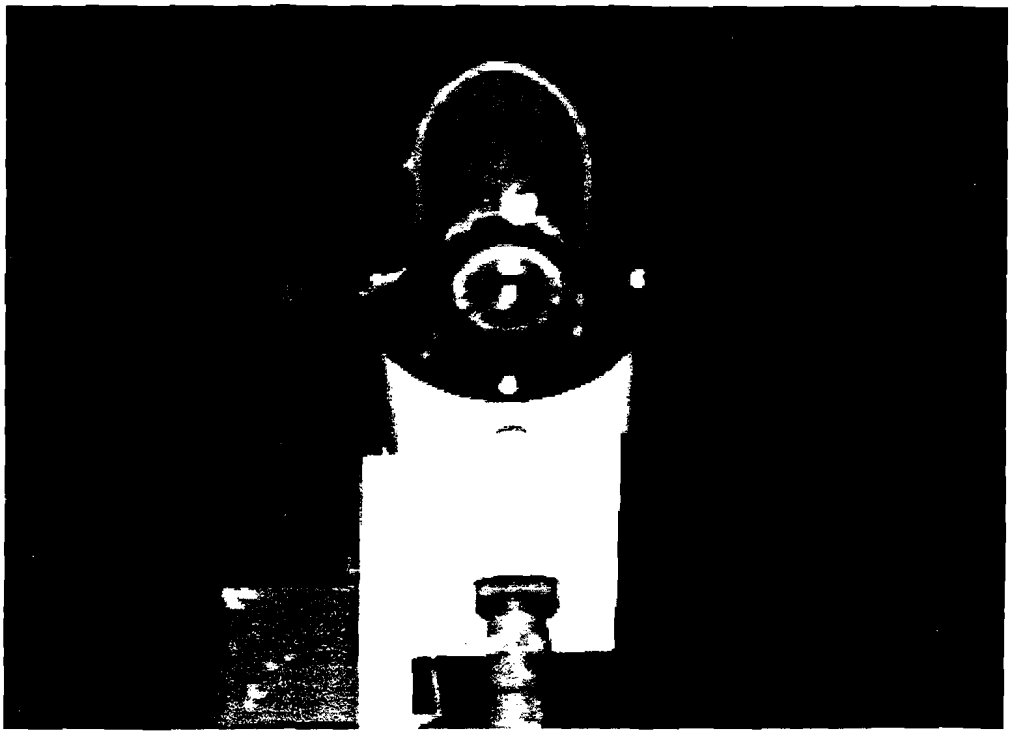

PHOTO 7. ALS "DONUT CLOG-

5.4.2 De-Ice Heater Test 2.

The intent of De-Ice Heater Test 2 was to reproduce conditions observed in the previous test but at a lower and constant temperature. For this test, the calibration plate was installed to provide data indicating the relationship between the loss in extinction coefficient with precipitation on the VS window. The effect of the calibration plate on test conduct was negligible.

5.4.2.1 Performance with De-Ice Heater.

This test was conducted on August 23, 1993 in the ROWPU Chamber. Snow was again directed at the transmitter at a angle of 135° F as shown in figure 59. Other test parameters included the following:

- Chamber temperature of -4° F;
- Wind tunnel air speed ranged from 20 to 22 mph; and
- Snow rate was 48 ounces per minute.

5.4.2.1.1 Conclusion/Comments.

As in De-Ice Heater Test 1, window signal readings were comparable to the previous blowing snow tests despite an increased snow rate. Unlike the part 1 of the previous test, a 100% clog was formed very early in the test and as a result, the blowing snow was terminated after 6 minutes of testing.

The fact that a 100% clog was achieved after only 3 minutes of the test suggests that either the snow rate was excessive or that the chamber temperature was not ideal. In any case, the goal of achieving a clogging rate where the de-ice heater was just able to melt the accumulation of snow was somewhat compromised.

However, since the previous test results indicated that an optimum temperature to disable the de-ice heater might be near, the intent of this test was to repeat the conditions observed from the last test except at a lower chamber temperature.

The VS transmitter window was cleaned and the de-ice heater was disabled as in De-Ice Heater Control Test 1.

5.4.2.2 Performance without De-Ice Heater.

De-Ice Heater Test 2 continued with a deactivated de-ice heater and the snow rate used in part 1 of the test. Unlike the first test, the chamber temperature remained constant for the entire test. Additionally, the VS transmitter and receiver hood temperatures were measured to be -18° and -16.6° F respectively. The snow spray duration totaled 5 minutes and the wind tunnel remained on after terminating the blowing snow.

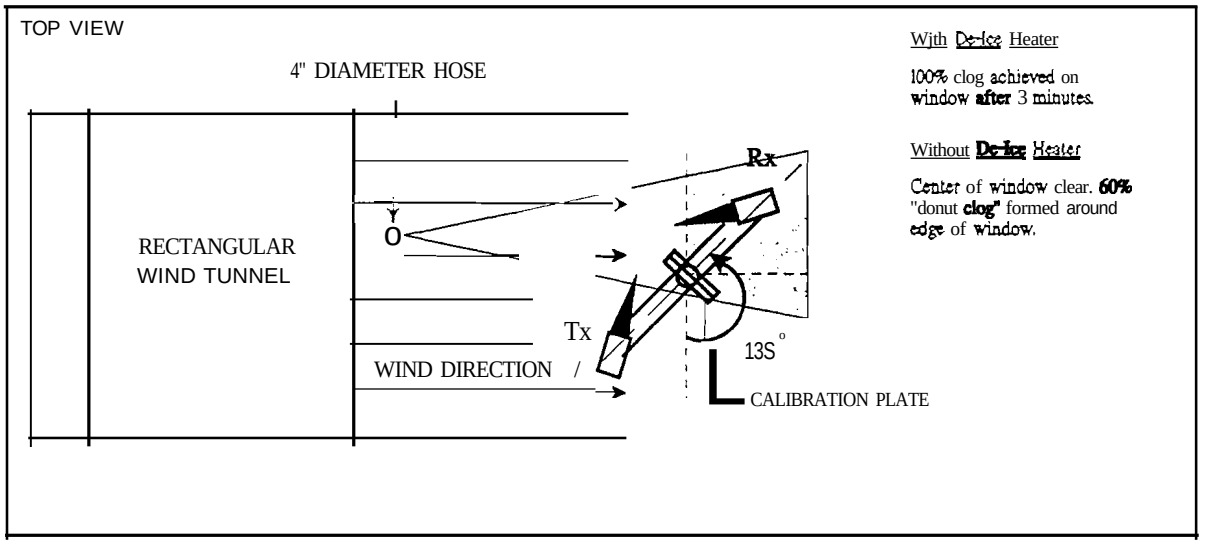

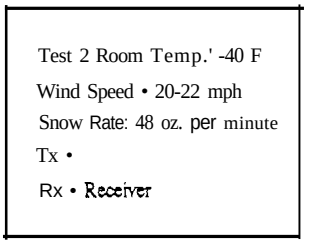

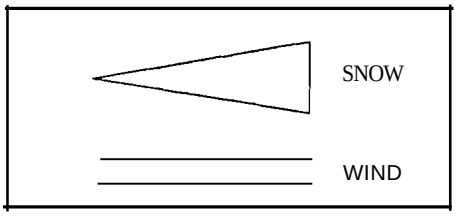

Figure 59. De-Ice Heater Test 2 at 135°(Tx} - Location: ROWPU Chamber

5.4.2.2.1 Conclusion/Comments.

The fact that a donut clog was achieved covering approximately 60% of the window (ref. figure 59) suggests that -4° F is much closer to the optimum tide-ice heater disabling" temperature than the -2.2° or 1.4° tested in De-Ice Heater Test 1. Lower window signal levels (85% vs. 104%) and higher extinction coefficient readings (with the calibration plate) also support the observed improved performance.

Despite the apparent increased resistance to clogging, it was noted that sensors recovery was slow with the wind tunnel activated. A thin layer of ice causing window signals of 21% and extinction coefficient readings of 56 km^{-1} (extinction coefficient readings were approximately 63 km^{-1} with the calibration plate) remained. Although this result is probably to be expected since the window heater was deactivated, the optimum de-ice heater disabling temperature should result in less ice initially forming on the VS window.

Although a significantly smaller clog was produced in this test with the de-ice heater disabled, an optimum temperature still cannot be determined from the previous two tests alone. Additional testing should be performed to determine this temperature. The above test results do suggest that the optimum temperature is probably between -10° F and 0° F.

Despite not finding an optimum temperature during testing, the results seem to indicate that there is a temperature at which disabling the de-ice heater would increase the sensors resistance to window icing. Results of tests with the look-out configuration and the ALS also support this theory. Additionally, other modifications such as reducing dew heater power and increasing de-ice heater power may increase sensor resistance to icing/clogging.

5.5 Low Visibility Performance.

As discussed in paragraph 4.5.5, the low visibility performance tests were essentially a comparison in extinction coefficient readings of the Look-Down VS, Look-out VS and Optec transmissometer. The intent of testing was to observe sensor performance for an extended time period (e.g. 20 to 30 minutes).

5.5.1 Fog Test 1.

Fog test 1 was conducted on August 23, 1993 in the ROWPU Chamber. Based on data recently collected at the otis Weather Test FacilitYt the Look-Down VS was calibrated with a new value of 43.9 km-. This number was 70% of the value used in the preceding blowing precipitation tests. The Look-Down VS, Look-Out VS, and Optec transmissometer were collocated in the center of the room as shown in figure 60.

5.5.1.1. Conclusion/Comments.

Because extinction coefficient readings of the Look-Down and Look-out VS quickly transitioned beyond the Category IIIb range (e.g. measurements reached 1100 km^{-1} within minutes), this test was not effective measuring sensor performance within the desired range of 50 km^{-1} to 350 km^{-1}. Quick movement of the extinction coefficient readings beyond the Category IIIb range was primarily due to an inability to control the fog within the chamber.

Significant differences in extinction coefficient measurements were also noted between the Optec transmissometer and both visibility sensor prototypes. These differences grew as extinction coefficient values increased.

It was noted that although the extinction coefficient readings were not identical for each sensor, these measurements would follow similar patterns, or track especially in the lower coefficient ranges (i.e., approximately 0 to 200 km^{-1}). For example, if the difference in extinction coefficient measurement was 20 km^{-1}, this offset would be relatively consistent as long as the fog densities did not significantly change. However, once the extinction coefficient values surpassed 200 km^{-1}, the offset between the sensors grew and sensor measurements no longer tracked. This observation is most likely a result from rapidly changing fog densities at each sensor.

The combination of the aforementioned factors resulted in not achieving the intended test objective. As a result, modifications to sensor parameters were made and the test was repeated in Fog Test 2.

5.5.2 Fog Test 2.

The second fog test was also conducted on August 24, 1993 in the ROWPU Chamber. The Look-Down VS, Look-Out VS and Optec transmissometer were positioned as in the previous test. To attempt to increase the correlation of the VS measurements, the Look-Down VS was recalibrated to be 30% higher than the Look-Out VS calibration value.

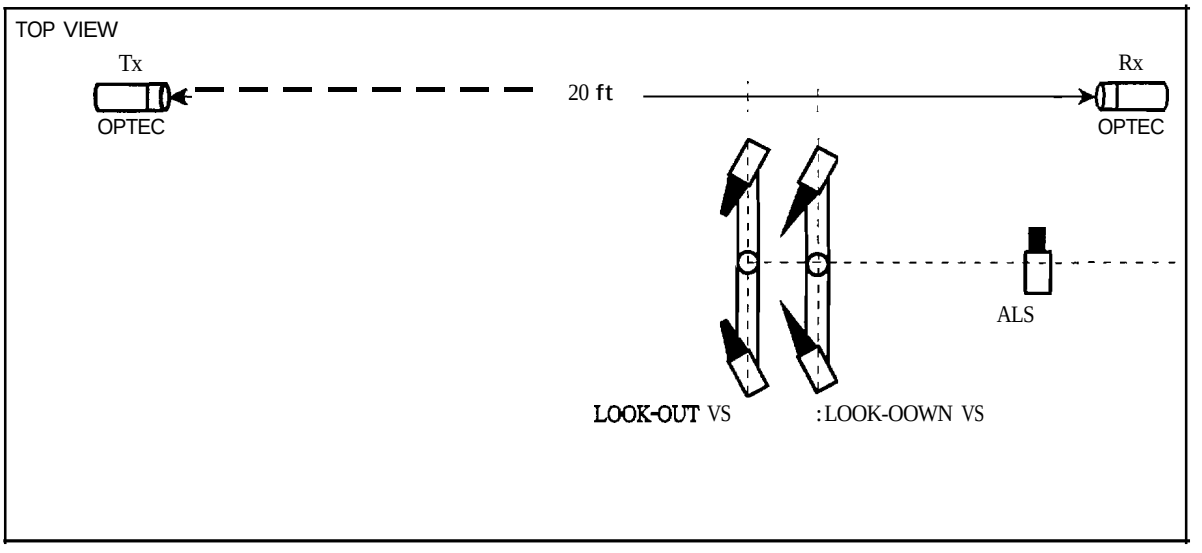

Figure 60. Fog *wl* Snow Gun Test 1-3 - Location: ROWPU Chamber

5.5.2.1 Conclusion/Comments.

In general, recalibrating the Look-Down VS did not significantly increase tracking with the Look-out VS and Optec transmissometer. However, an improvement in the correlation of the sensors was noted during low extinction coefficient readings ranging from 0 km^{-1} to 200 km^{-1}). Nevertheless, as extinction coefficient values increased, tracking became more erratic. Light interference between adjacent sensors may also have contributed to the discrepancies noted at higher extinction coefficient levels.

5.5.3 Fog Test 3.

This test was conducted on August 24, 1993 in the ROWPU Chamber. The Look-Down VS, Look-Out VS and the Optec transmissometer were set up as in the previous tests. In this test, a more concentrated effort was made in sustaining Category IIIb visibility for an extended period. To achieve this goal, the procedure as discussed in paragraph 4.5.5 remained, but reliable threshold points were determined (based on results from Fog Test 1 and 2) for re-injecting and halting the fog production. These threshold points are summarized in Table 7 below.

TABLE 7 FOG ACTIVATION/DEACTIVATION THRESHOLDS

FOG ACTIVATION RANGE	FOG DEACTIVATION RANGE
50 km^{-1} - 60 km^{-1}	500 km^{-1} - 600 km^{-1}

5.5.3.1 Conclusion/Comments.

Use of the above thresholds allowed testing to continue for a longer duration. As a result, extinction coefficient readings were able to be compared for a sustained ten minute interval. Results of the comparison are indicated in Table 8.

TABLE 8 VISIBILITY SENSOR EXTINCTION COEFFICIENT COMPARISON

TIME ELAPSED (min.)	LKDWN VS	LKOUT VS	OPTEC	iLKDWN VS - LKOUT VS:	lLKDWN VS - OPTECi
t+O	123 km-l	146 km-1	109 km-1	23 km-l	14 km-1
t+1	105 km-l	125 km-l	94 km-1	20 km-l	11 km-l
t+2	81 km-1	87 km-1	77 km-1	6 km-l	4 km-1
t+3	67 km-l	164 km-l	62 km-1	97 km-1	5 km-1
t+4	145 km-1	163 km-1	120 km-1	18 km-l	25 km-1
t+5	117 km-1	134 km-1	103 km-1	17 km-1	14 km-1
t+6	91 km-1	133 km-1	90 km-1	42 km-1	1 km-1
t+7	79 km-1	92 km-1	81 km-1	13 km-l	2 km-1
t+8	80 km-1	86 km-1	70 klD-l	6 km-1	10 km-1
t+9	37 km-1	52 km-1	65 km-1	15 km-1	28 km-1

The average difference along with the standard deviation of difference in extinction coefficient readings for the Look-Down VS, Look-Out VS and the Optec transmissometer are indicated for the above measurements in Table 9.

Table 9 CATEGORY IIIB SENSOR COMPARISON

SENSOR PAIR	AVERAGE DIFFERENCE IN EXTINCTION COEFFICIENT MEASUREMENT	STANDARD DEVIATION OF DIFFERENCE IN EXTINCTION COEFFICIENT
Look-Down vs. OPTEC	11.4 km-1	8.77 km-1
Look-Out vs. OPTEC	33.7 km-1	25.9 km-1

The data indicates that for extinction coefficients ranging from 65 km^{-1} to 120 km^{-1} (as measured by the optec transmissometer), there were small differences in readings for each VS prototype. The differences translate to errors of approximately 50 feet at runway light setting 5. This error is within the one reporting unit (100 feet) requirement for the RVR.

The standard deviation statistic indicates that measurements from the look-down configuration were consistently closer to the transmissometer than the Look-out VS. This evidence does not necessarily mean that the look-down configuration improves accuracy visibility readings (other things being equal). Due to the uncertainty in factors such as relative fog density, it is difficult to make firm conclusions other than the qualitative observations made during testing.

5.5.4 Fog Test 4 & 5.

These tests were conducted on August 24, 1993 in the ROWPU Chamber. The VS, Look-Out VS and the Optec transmissometer were repositioned as shown in figures 61 and 62. The intent of these tests were to gain additional data concerning the fog density at various locations within the chamber. In so doing, a visual inspection of extinction coefficient readings was made at each sensor location.

5.5.4.1 Conclusion/Comments.

The time lag of approximately 1 minute, between when fog was input in the chamber and when the VS detected a change in extinction coeffi'cient suggests that the sensor/system cannot measure quick (i.e., within 30 seconds) changes in fog density.

Although significant differences in fog density were noted at various locations of the chamber, it was noted that the sensors tracking correlation improved when the sensor were positioned close together.

Because of the homogeneity problem, visibility measurements became somewhat arbitrary and tracking became the better indicator of sensor accuracy. Due to these problems, additional tests are necessary to properly verify Look-DownVS accuracy during Category IIIb visibility.

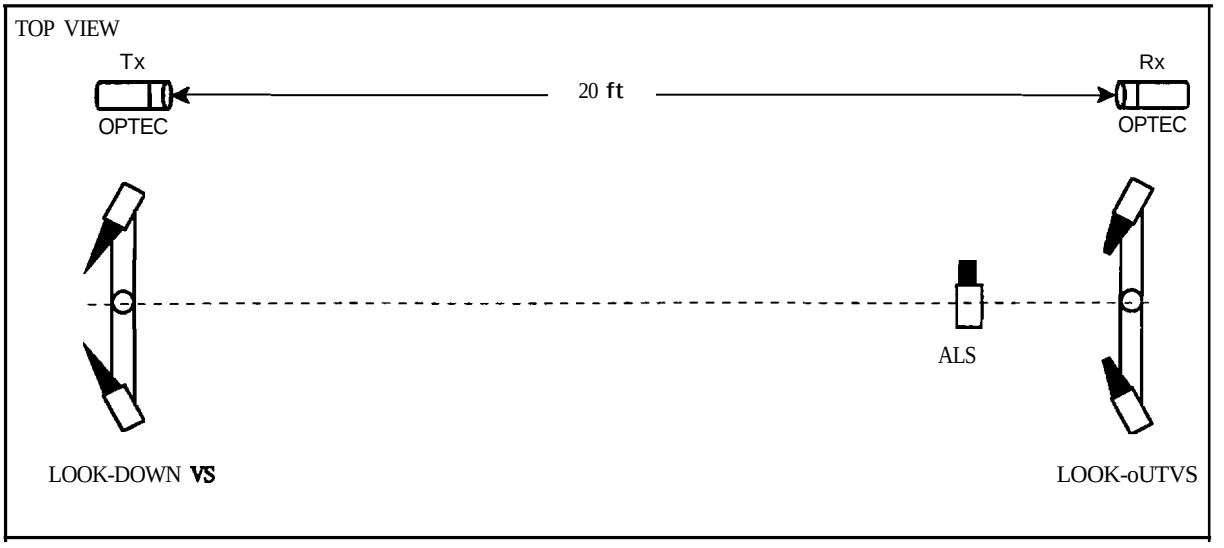

Figure 61 Fog *wi* Snow Gun Test 4 - Location: ROWPU Chamber

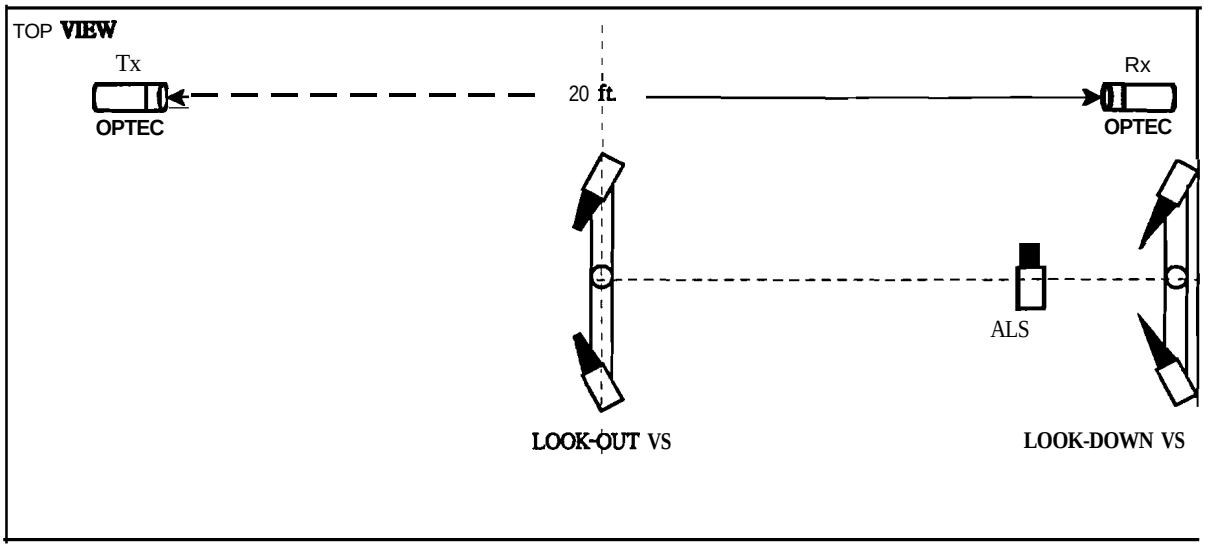

Figure 62 Fog *wi* Snow Gun Test 5 - Location: ROWPU Chamber

6.0 TEST LIMITATIONS AND PROBLEMS.

The following limitation and problems noted during testing are summarized as fo11ows:

Blowing precipitation

- The duration of the snow blowing tests was short, typically 5-10 minutes; Actual conditions are likely to be more dynamic and exceed the duration of the test scenarios.

- Although it did not appear to affect extinction coefficient measurements, icicles formed on the unheated areas of the hood and window base during many test scenarios.

- Look-Down VS window signals were significantly higher than expected, especially when precipitation was directed at various angles to sensor optics. In many cases, the window signals were higher than those measured by the Look-Out VS. Additional adjustments to the sensitivity of the Look-Down VS in response to window signals may need to be implemented.

Low Visibility Performance

- The lack of optimum calibration values for the Look-Down VS resulted in additional difficulties in discerning actual sensor accuracy; As a result, the reliability of the calibration value used for the Look-Down VS was questionable;

- Due to difficulties in assuring similar fog densities at each sensor and differences in sensor baseline, an undetermined amount of error is inherent in the sensors visibility measurements;

- Collocated VS and transmissometer sensors increases the probability that light interference between sensor could exist; This interference would be undetected.

- Due to significant differences in the extinction coefficient measurements and uncertainties in fog density, it was difficult to determine which device correctly measured actual chamber visibility; and

- Due to differences in the reporting intervals between the RVR VS (e.g. every 10 seconds) and the Optec transmissometer (e.g. once per minute), the visibility measurements of the two sensor may represent slightly different time periods.

7.0 CONCLUSIONS.

The test data supports the following conclusions:

- The look-down configuration significantly increases VS resistance to snow/ice clogging;
- The look-down configuration significantly improves VS recovery from snow/ice clog conditions;
- Although separate heater controls could optimize sensor performance, the magnitude of the temperature difference between the transmitter and receiver do not appear to be large enough to cause additional icing/clogging problems.
- Although an optimum temperature to disable the de-ice heater could not be determined, the sensor's resistance to snow and ice clogging significantly increased when the heater was disabled at -4° F.

8.0 RECOMMENDATIONS.

Although the use of the Look-Down VS appears to improve the RVR's performance in inclement weather conditions, additional testing and analysis should be performed to fUlly verify system's accuracy and performance. In particular, extinction coefficient data should be obtained for locations around the united states that experience heavy precipitation (snow, ice, rain, etc.). This data can be used to further analyze the test scenarios and data collected at CRREL.

A portion of the blowing snow tests should be repeated for longer periods of time which resemble actual weather patterns. Testing under actual operational conditions is highly recommended.

Since no actual standard exists for Category IIIb performance measurements, several avenues of validation should be pursued to better qualify and verify Look-Down VS performance. These avenues should include laboratory tests, comparisons with Tasker systems at the otis Weather Test Facility, and comparisons with operational category IIIb systems, such as those in use in the united Kingdom.

APPENDIX I

Specialized Test 2

MT. WASHINGTON Category IIIb Evaluation

DRAFT

CATEGORY IIIB TEST REPORT

for the

NEW GENERATION RUNWAY VISUAL RANGE SYSTEM (RVR)

NOVEMBER 1993

Prepared by:

Weather/Primary Radar Division ACW-200B
Federal Aviation Administration Technical Center
Atlantic City International Airport
Atlantic City, NJ 08405

EXECUTIVE SUMMARY

This report details the initial results of the Runway Visual Range (RVR) operational Test and Evaluation (OT&E) Category IIIb Test. Testing was conducted from September 13 1993 to September 21, 1993 at the summit of Mount Washington, NH. This test was defined as an OT&E Operational Test with the participation from: ACW-200 (Test Director), AOS-220 and the Volpe Transportation Systems Center.

Operational problems observed during testing are noted in this report. These problems will be written as Test Trouble Reports (TTR) after further review.

A total of 354 observations were made with the RVR system, testing personnel and an Optec Transmissometer. The average difference between the observed visibility and the calculated RVR was less than 100 feet. The percentage of non-conservative (calculated RVR greater than the observed visibility) measurements was less than 20%. The percentage of out-of-tolerance (calculated RVR 100 feet greater or less than observed visibility) measurements was less than 38%. The largest difference between the observed visibility and the calculated RVR was 419 feet.

The following problems were noted during testing:

(1) Rounding of the RVR product could cause non-conservative visibility measurements (e.g., given that the observed RVR is 166 feet and the calculated RVR is 251 feet, the controller display would output an RVR of 300 feet);

(2) The RVR system may give erroneous visibility measurements under quickly changing (i.e., significant fog densities changing in less than one minute) fog densities;

(3) Horizontal Visibility Sensor (HVS) shutdowns were observed during rain events after the RVR reported fiDe-Ice" heater alarms; and

(4) The HVS is susceptible to high window contamination signals during blowing rain events. Window signal measurements ranging from 80% to 101% were observed during these events. Recent modifications to the HVS appear to be unsuccessful in reducing high window signals.

Although the initial results suggest that the RVR can perform satisfactorily in the tested Category IIIb range (i.e., 150 feet to 350 feet), because of significant test limitations, additional testing should be performed.

1.0 PURPOSE.

The purpose of this report is to provide a summary of the Runway Visual Range (RVR) Operational Test and Evaluation (OT&E) Category IIIb test results. Testing was conducted at the summit of Mount Washington, NH from September 13 through September 21, 1993.

2.0 SCOPE.

This report presents results that were evident during testing or that required simple analysis at the completion of testing. Results requiring in-depth analysis are not addressed in this report.

3.0 BACKGROUND.

This was the first test conducted to verify RVR operation during actual Category IIIb conditions.

3.1 Hardware.

The Mount Washington Category IIIb test consisted of the following hardware:

(1) One Runway Center-line Light fixture,
(2) One Variac power supply,
(3) Two Horizontal Visibility Sensors, identified as HVS 01 and HVS 02,
(4) One Look-Down Visibility Sensor, identified as LDVS 03,
(5) One optec Long Path Visibility (LPV) Transmissometer,
(6) One Ambient Lighting Sensor (ALS),
(7) One Data Processing unit (DPU), and
(8) Sensor Interface Electronics (SIE) for three Visibility Sensors and one ALS.

Table I-Ion the following page identifies the above hardware components with part numbers.

TABLE 1-1 MOUNT WASHINGTON CATEGORY IIIb HARDWARE

COMPONENT	RUNWAY LIGHT FIXTURE	VARIAC POWER SUPPLY	HVS 01	HVS 02
10	L-850	N/A		
SPECIFICATION	5,000 candelas	O- 10 amps	50 - 6,500 feet	
TRANSMITTER ID			726	861
RECEIVER ID			773	748
NOTES	*maximum input current was 6.6 amps*		*85 watt "End-Loaded" Heater* HVS = Horizontal Visibility Sensor	

COMPONENT	OPTEC LONG PATH VISIBLITY TRANSMISSOMETER	AMBIENT LIGHTING SENSOR (ALS)	LDVS 03
ID	Version 2	610	
SPECIFICATION	20 ft. baseline	0 - 12,000 ft. - lamberts	50 - 6,500 feet.
TRANSMITTER ID			1002
RECEIVER ID			956
NOTES	*modified to operate with a 20 ft. baseline*	*120 watt heater, #73*	*150 watt "End-Loaded" Heater LDVS = "Look-Down" Visibility Sensor*

COMPONENT	SIE ENCLOSURE 01	SIE ENCLOSURE 02	SIE ENCLOSURE 03
SERIAL	186	180	174
CONTROLLER PC CARD	860523-3, Rev. C	860523-2, Rev. C, SN 501	860523-2, Rev. C, SN 493
PERSONALITY MODULE PC CARD	860526-1, Rev. C	860526-1, Rev. D, SN 251	*covered by retrofit*
VS SENSOR used with	HVS 01	HVS 02	LDVS 03
NOTES	*SIE = Sensor Interface Electronics*		

COMPONENT	ALS SIE ENCLOSURE
SERIAL	163
CONTROLLER PC CARD	860523-3, Rev. Cl
MODULE PC CARD	860529-1, Rev. D

3.2 Software.

The Software used during the Mount Washington Category IIIb test was identified by the following versions numbers:

(1) EEPROM's used in SIE controller boards contained non-production software and was identified as 9/9/93 2.5E1.

(2) The Data Processing unit (DPU) contained the following software version numbers:

Maintenance Processing unit	(MPU)	0802936026
Product Processing Unit A	(PPU A)	0802935024
Product Processing Unit B	(PPU B)	0802935024
Visibility Sensor 01	(HVS)	0823932025
Visibility Sensor 02	(HVS)	0823932025
Visibility Sensor 03	(LKDWN)	0823932025
Ambient Lighting Sensor	(ALS)	0831933025
Runway Light Intensity Monitor	(RLIM)	-000000001

3.3 Data Collection Equipment.

The following equipment was used for data collection during testing:

(1) One rack-mount PC. Used to receive and display data from the DPU External Users (EU) port.

(2) One lap-top PC. Used to make real-time calculations of the RVR product based on the extinction coefficient, ambient light, and runway light settings. This PC executed an RVR product program which ran externally to the RVR system, but received actual visibility parameters from the RVR to make visibility product calculations.

4.0 TEST DESCRIPTION.

The test was categorized as an OT&E Operational Test. participating organizations included ACW-200 (Test Director), AOS-220, and the Volpe Transportation Systems Center.

The intent of testing was to compare RVR visibility measurements with a known reference during actual Category IIIb visibility (i.e., 150 to 700 feet). References used during testing included the optec Transmissometer and test personnel.

4.1 Test Setup.

A description of the test setup is shown in figures 1-la and 1-lb (see appendix A). The runway light was installed 27 feet 5 inches (vertically) from the base of an observation tower. This location was chosen to create an angUlar viewing distance that would resemble a pilots view while on final approach to the runway. The angular viewing distances for each observation point is shown in figure 1-lb. RVR VS's and the Optec Transmissometer were strategically placed on a level platform as shown in the diagram. Each sensor was mounted 12 feet vertically (distance from the ground to the sensor head). The LDVS 03, HVS 01 and the Optec Transmissometer were collocated next to the runway light. HVS 02 was located approximately 200 feet from the runway light.

Visibility distances from 50 feet to 350 feet were marked on the Mount Washington summit (see figures 1-la and 1-lb). These distances were measured from the base of the observation tower as well as from the runway light fixture (e.g., d1, d2, •••d13 in figure 1-lb). Because of the sloping terrain at the summit of Mount washington, these distances were not horizontal with respect to the base of the observation tower.

A log file was initialized to record RVR product calculations along with the one-minute average of extinction coefficients output from the DPU.

Before each visibility measurement, the following sequence transpired:

(1) The variac was adjusted to provide the required current for the desired runway light setting (see Table 1-3 in appendix A for the current/light setting ratios)

(2) RLIM data was manually entered at the RVR DPU to match the desired light setting.

4.2 Test Conduct.

Each visibility measurement required the use of two people (observer #1, observer #2). Observer #1 viewed the runway light at various distances until the light was "barely visible". Barely visible meant that the runway light appeared as a small faint object in the shape of a pencil point.

It was required that the light be visible for approximately 50% of the time the observer was viewing the object. This distance was reported via radio to observer #2. Observer #1 also reported prevailing weather conditions such as rain and wind speeds.

Observer #2 monitored the RVR product program and recorded the following information:

(1) Time of measurement,
(2) Distance and prevailing weather conditions, and
(3) RVR product calculations for the three visibility sensors.

Observer #1 allowed approximately thirty seconds to one minute to elapse before conducting the next measurement.

Visibility measurements were taken using runway light settings one through five (see Table 1-3) and spanned a distance range of 50 to 350 feet. Measurements were taken during daytime and nighttime and in various weather conditions such as: fog, fog with light to moderate rain, and fog with rain and high winds. Data from the Optec Transmissometer was not monitored in real-time, but was recorded along with the RVR sensor measurements by the data acquisition system. The performance of the RVR sensors (HVS's, LDVS) in relation to the Optec Transmissometer was tracked when observations were not being made. Scatter-plot graphs showing the extinction coefficient relationship between visibility sensors were analyzed to obtain an early estimate of the performance of the sensors.

5.0 TEST RESULTS.

Table 1-2 (on the following page) details test results in tabular form. A total of 354 "visibility observations" were made with the RVR system, observers and the Optec Transmissometer. The average difference between the "observed visibility" and each RVR VS (using un-rounded RVR Product calculations) is represented by the symbol d_{om}.

The percentage of non-conservative (i.e., RVR measured visibility higher than observed) measurements[1] is represented by the symbol *n*.

statistical analysis of the data indicates that all three visibility sensor's (HVS 01, HVS 02, LDVS 03) were within tolerance (i.e., one reporting unit or 100 feet) in 62.4% of the measurements. The percentage of out-of-tolerance (i.e., difference in observed visibility and RVR calculated more than 100 feet) measurements is represented by the symbol *Ot*.

1 using unrounded RVR product calculations.

VS Performance vs. Observed Visibility

VislbiDty Sensors			
Statistic	LDVS "03"	HVS "01"	HVS "02"
d_{om}	46.01 ft	86.10 ft	72.53ft
n	19.38 %	5.05 %	8.14 %
O_t	4.59 %	37.6%	18.9 %
D_{om}	+223 ft -194 fl	+419 ft -208 ft	+247 fl -290 ft
Standard Deviation	46.14 ft	54.30 ft	96.18 ft

d_{om} - The average between the "observed visibility" and the RVR VS.

n - Percentage of "non-conservative"

Ot - Percentage of out-of-tolerance measurements.

D_{om} - Largest difference observed visibility and RVR VS.

+ - measurement
- conservative measurement

Table 1 - 2

The largest difference between the observed visibility and the measured visibility for each sensor is represented by the symbol D_{om}. The variance and the standard deviation of the difference between the RVR calculated visibility and the observed visibility is also shown in Table 1-2.

Figures 1-3, 1-4, and 1-5 in Appendix A show the correlation between RVR visibility sensors and observed measurements, the correlation between visibility sensors (i.e., LDVS vs. HVS 01, LDVS vs. HVS 02, HVS 02 vs. HVS 01), and the number of observations performed at each runway light setting.

The following problems were noted during testing:

(1) The rounding of the RVR product could cause non-conservative visibility measurements (Example: given that the observed RVR is 166 feet and the calculated RVR is 251 feet, the controller display would output an RVR of 300 feet);

(2) The system may give erroneous visibility measurements under quickly changing (fog densities that change in less than one minute) fog conditions;

(3) During rain events, Horizontal Visibility Sensor shutdowns occurred after De-Ice heater alarms were reported; and

(4) The HVS's are susceptible to high window contaminations in blowing rain conditions (contamination readings of 80% to 101% in .5 units).

Problems involving HVS shutdowns and high HVS window contaminations have been noted in previous tests but have not been corrected.

5.1 Test Limitations.

Limitations to the test include the following:

(1) There is no "approved" standard for comparing the runway visibility as measured by the RVR systems, observers, or Optec Transmissometer. This forces the data analysis to be sUbjective in nature.

(2) The homogenetic (or lack of) nature of the "fog" could only be measured by the RVR system. Fog density could differ at observation points and sensor locations.

(3) Due to size restrictions of the Mount Washington summit, the entire category IIIb range could not be tested.

(4) Weather conditions caused the Optec Transmissometer to lose calibration on several occasions, thus preventing its use as a reference for the duration of the period.

(5) Photometric data was not available for the specific runway light used. Photometric tests should be performed on the runway light to compare its output to an average runway centerline light.

(6) Because of the topography of the mountains summit, the location of the sensors with respect to the observers, and the installation of the runway centerline light (mounted upside-down), this test was an extremely simplified approach for measuring runway visibility.

6.0 CONCLUSION.

Although the initial findings of this report suggest the RVR's performance in the Category IIIb range may be sUfficient, the limitations listed in section 5.1.1 prevent the formation of any finite conclusions on system accuracy.

continued testing and the development of a standard for Category IIIb visibility will be necessary to completely validate the accuracy of the RVR system.

7.0 RECOMMENDATION.

Based on the conclusion in section 6.0, it is recommended that additional Category IIIb testing be performed. These tests should be more scientific in nature and be designed to eliminate and sUbjective inputs to the accuracy analysis.

ACW-200 is aware of the urgent need to remedy the remaining major discrepancies with the RVR system. Every effort will be made to assist the Program Office and Teledyne Controls in correcting and testing the problems noted in this report.

APPENDIX A

CATEGORY IIIb TEST LAYOUT

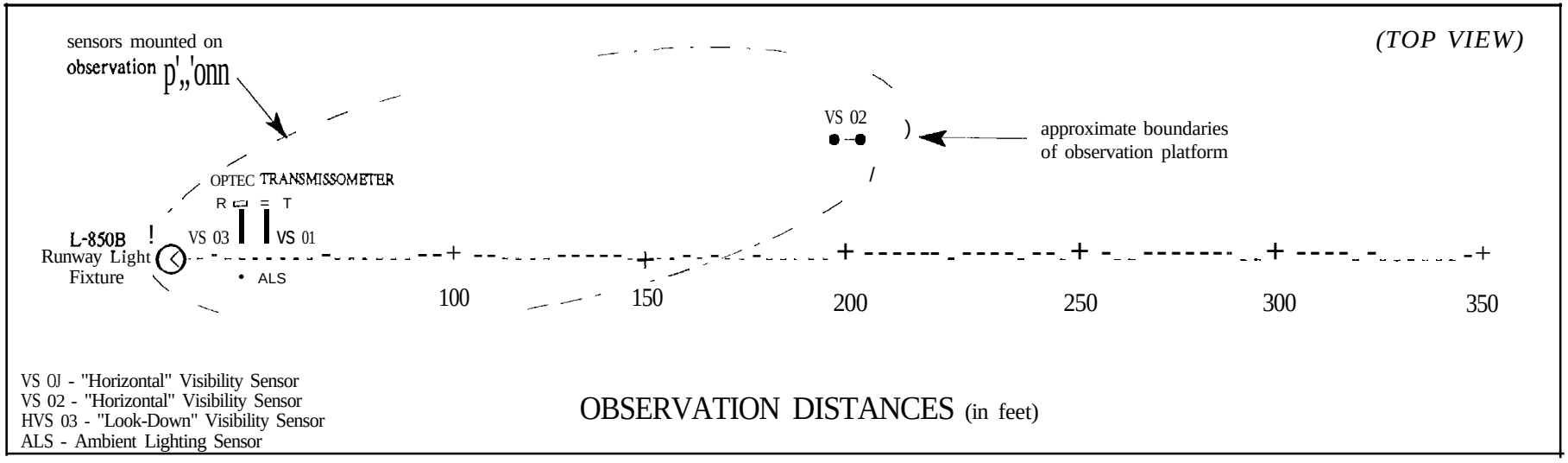

Figure l-la

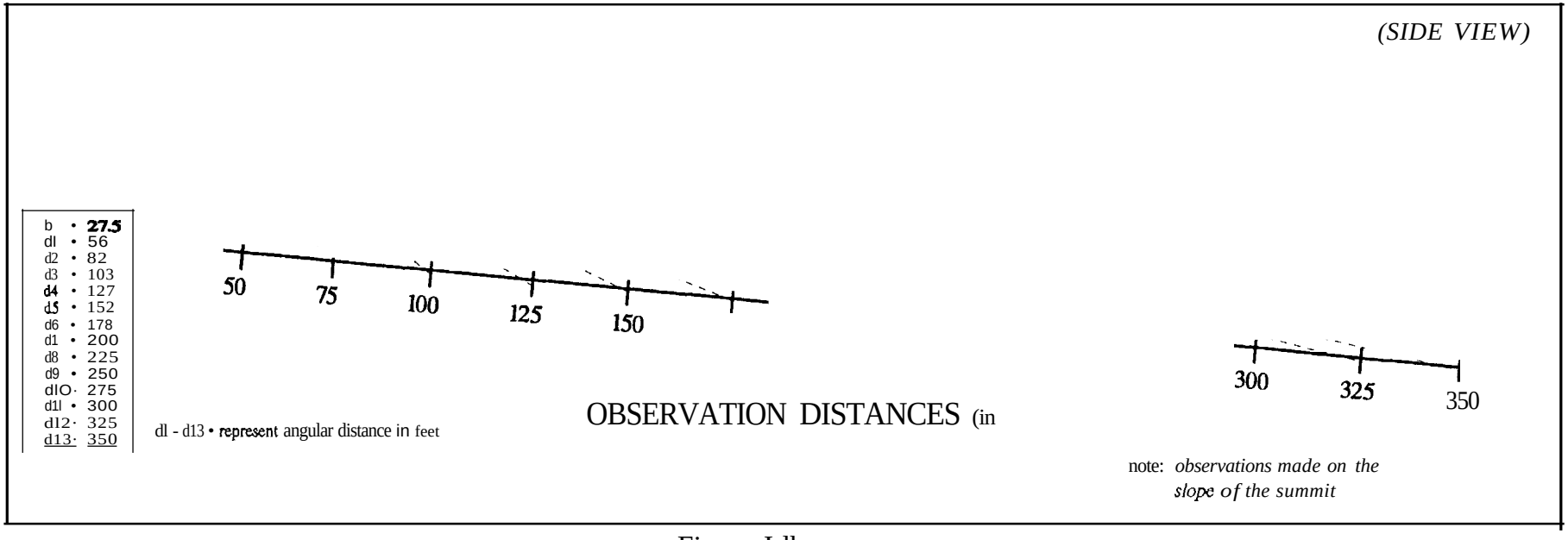

Figure I-lb

A-I

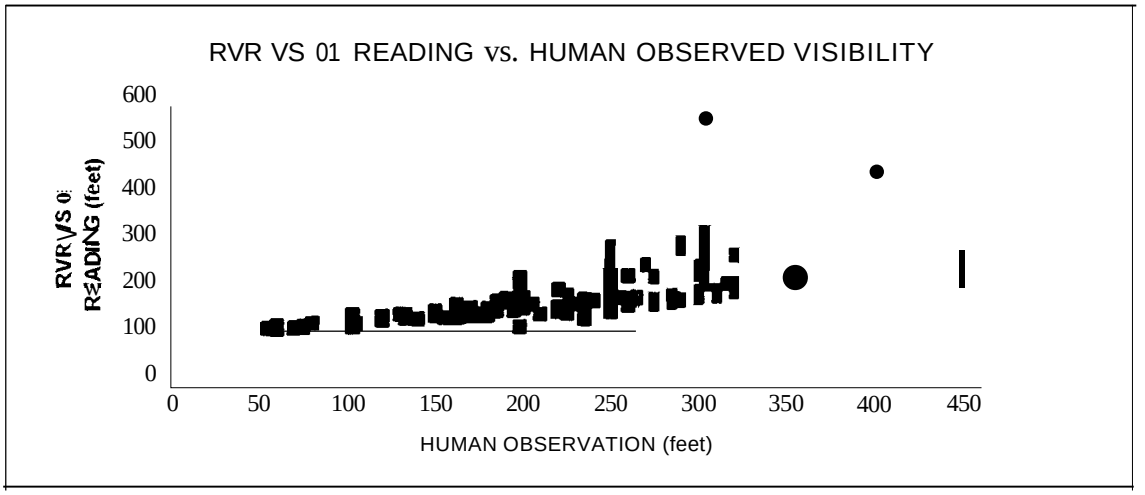
RVR VS 01 READING vs. HUMAN OBSERVED VISIBILITY
RVR VS 01 READING (feet)
600
500
400
300
200
100
0
0
50
100
150
200
250
300
350
400
450
HUMAN OBSERVATION (feet)

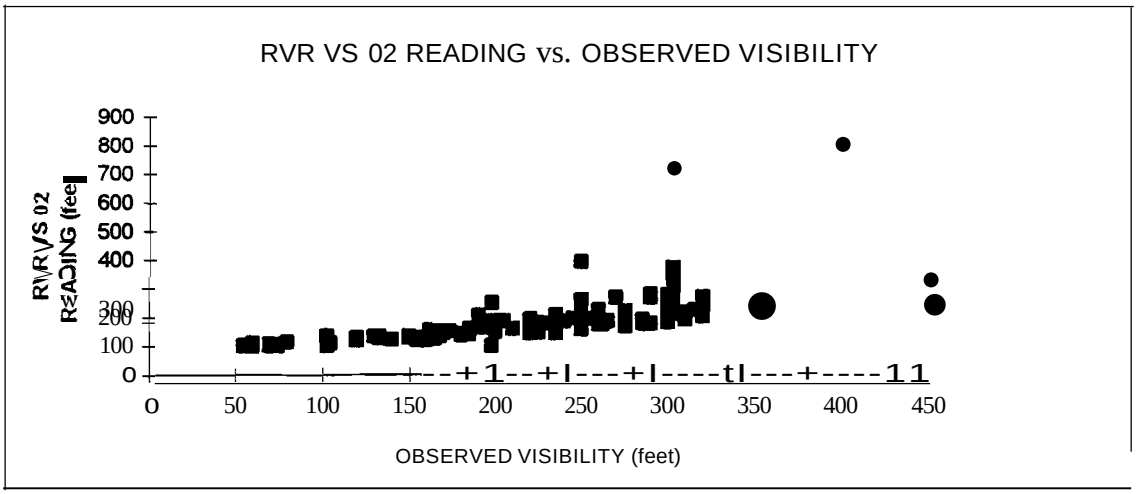
RVR VS 02 READING vs. OBSERVED VISIBILITY
RVR VS 02 READING (feet)
900
800
700
600
500
400
300
200
100
0
0
50
100
150
200
250
300
350
400
450
OBSERVED VISIBILITY (feet)

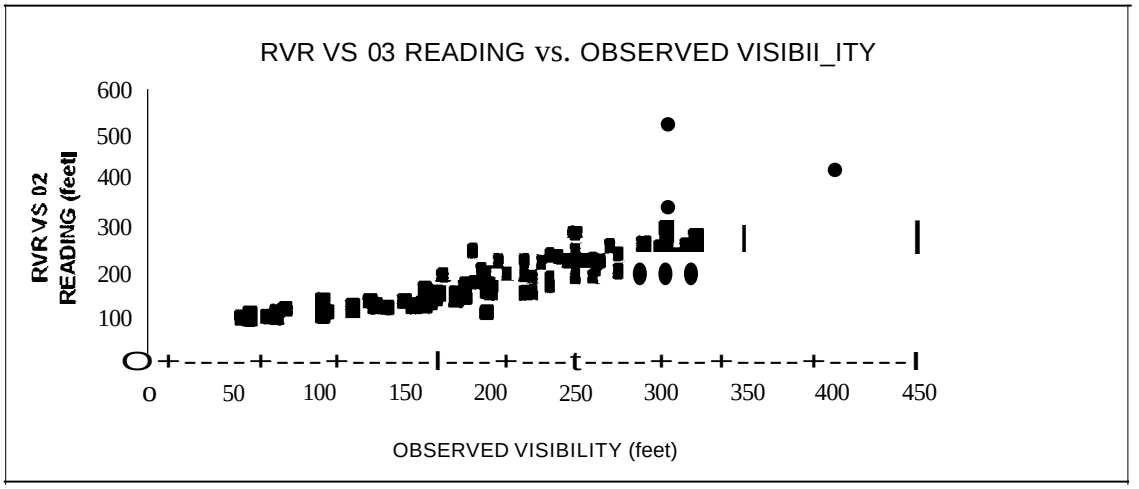
RVR VS 03 READING vs. OBSERVED VISIBII_ITY
RVR VS 02 READING (feet)
600
500
400
300
200
100
0
0
50
100
150
200
250
300
350
400
450
OBSERVED VISIBILITY (feet)

Figure 1-3

RVR VS Correlation Performance

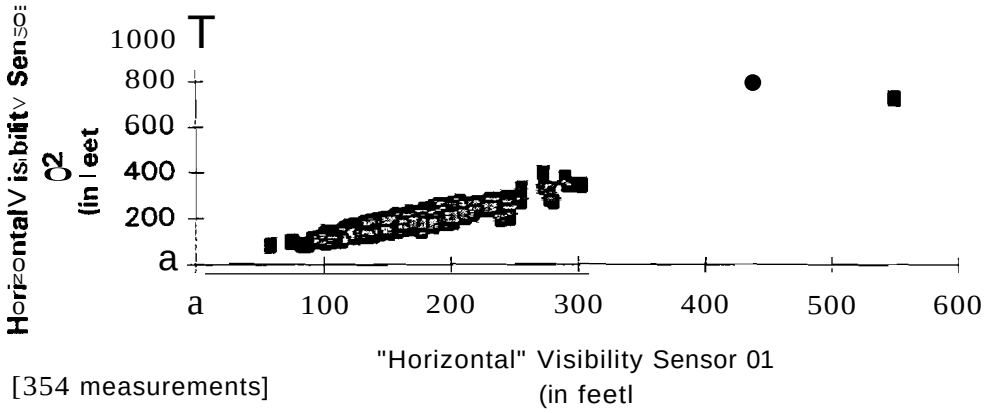

[354 measurements]

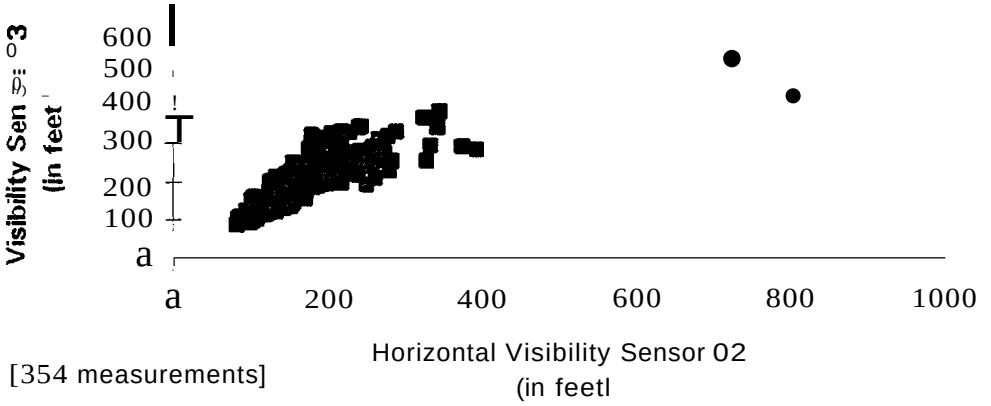

[354 measurements]

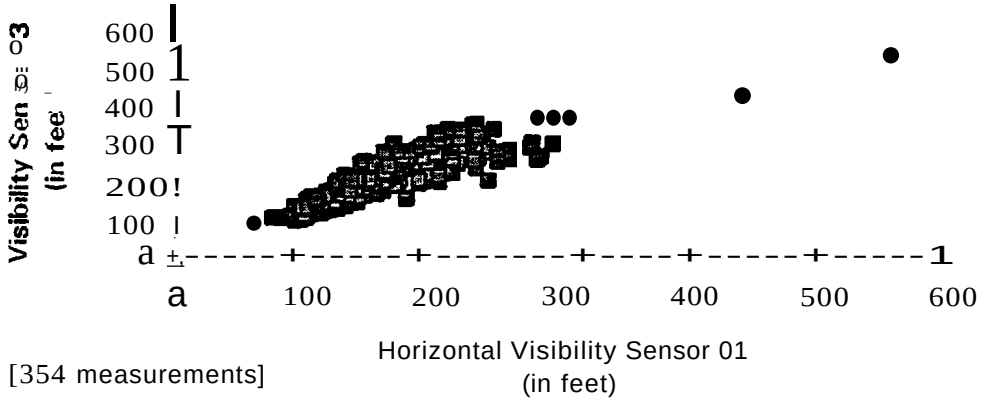

[354 measurements]

Figure 1-4

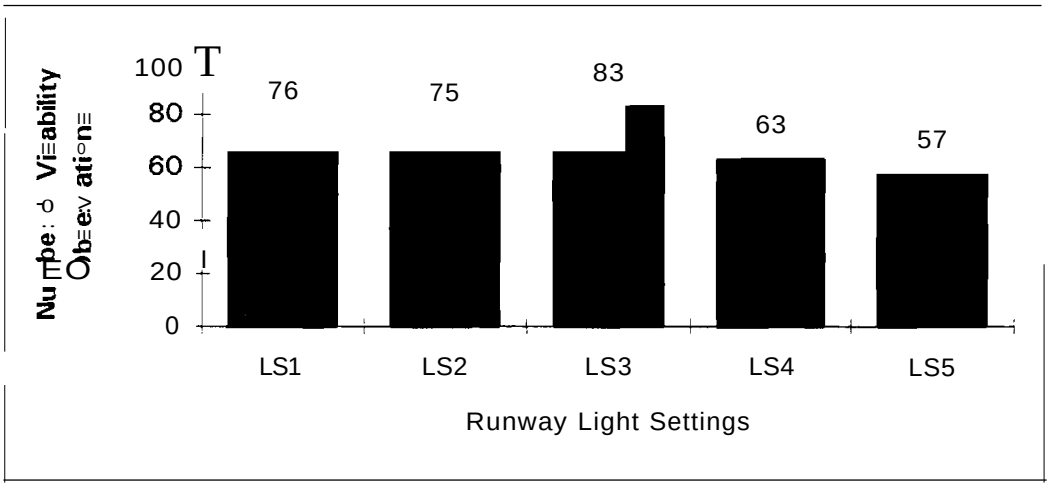

Runway Light Setting Current Ranges

Runway Light Setting	Variac Setting (Current to Light)
1	2.8 Amps
2	3.4 Amps
3	4.1 Amps
4	5.2 Amps
5	6.6 Amps

Figure 1-5

APPENDIX J
SHAKEDOWN DISCREPANCY FORMS

Note: Discrepancy forms that are open as of 3/95 include the following numbers: 31, 32, 35, 36. The remaining forms are closed.

RVR DISCREPANCY/IMPROVEMENT FORM

SITE: Kansas City, Missouri (MCl)

TEST CATEGORY: a DATE/TIME: 03/23/92 l2:45prn

TEST AREA: ALS and VS (Handar) Nameplates

TEST PROC EDURES STEP: 1.0.a

DISCREPANCY: ALS and VS SIE's nameplates are fading and are or are becoming unreadable.

SUGGESTED ACTION: Replace nameplates with new nameplates meeting the requirements of specification FAA-E-2772, 1-3.10.

IMPROVEMENT RECOMMENDATION:

TEAM LEAD.ER: R.W. Sargent (RWS) Holly Stevens (HC)

TEST MANAGER: Vernon Kitchen (DwK)

Non-critical

FORM #02

RVR DISCREPANCY/IMPROVEMENT FORM

SITE: Kansas City, Missouri (MGl)

TEST CATEGORY: a and c DATE/TIME: 03/19/92 lO:OOam

TEST AREA:

TEST PROCEDURES STEP: 1.0.a and 3.0.

DISCREPANCY: The CD keypad cannot be read in the Tracon room.

SUGGESTED ACTION: The keypad should be backlighted for easy readability.

IMPROVEMENT RECOMMENDATION:

TEAM LEADER: RWS HCS

TEST MANAGER:

Critical

FORM #03

RVR DISCREPANCY/IMPROVEMENT FORM

SITE: Kansas City, Missouri (MGl)

TEST CATEGORY: a and c

DATE/TIME: 03/19/92 lO:OOam

TEST AREA: Controller Display

TEST PROCEDURES STEP: 1.0.a and 3.0.b

DISCREPANCY: The feet/meter switch can inadvertently be changed while adjusting the backlighting. This is a safety hazard.

SUGGESTED ACTION: Place feet/meter switch inside CD unit so that it cannot be inadvertently changed.

IMPROVEMENT RECOMMENDATION:

TEAM LEADER: HCS RWS

TEST MANAGER: DWR

RVR DISCREPANCY/IMPROVEMENT FORM

SITE: Kansas City, Missouri (MCl)

TEST CATEGORY: _c _ DATE/TIME: 03/19/92 10:00am

TEST AREA: RVR System

TEST PROCEDURES STEP: 3.0.b

DISCREPANCY: The air traffic controller's question the accuracy of the system in bad weather, due to the observation of the Tasker 400 reading 4500 while the Teledyne equipment read 6500 in fog.

SUGGESTED ACTION: Investigate the Teledyne system in bad weather conditions, and verify/validate the accuracy of the system.

IMPROVEMENT RECOMMENDATION:

TEAM LEADER: HCS

TEST MANAGER:

Critical

FORM #05

RVR DISCREPANCY/IMPROVEMENT FORM

SITE: Kansas City, Missouri (MCI)

TEST CATEGORY: c DATE/TIME: 03/18/92 12:30pm

TEST AREA: Controller Display

TEST PROCEDURES STEP: 3.0.b

DISCREPANCY: The CD RVR product limits do not follow the runway. An airport can have a categorY II and a category III runway and the limits can be switched if runway positions are changed. This is a safety hazard.

SUGGESTED ACTION: Change the software as required so that the CD displayed RVR product limits will follow the associated runway, per FAA-E-2772, paragraphs 5.2.1, 5.2.4, and 5.2.5.

IMPROVEMENT RECOMMENDATION:

TEAM LEADER: HCS

TEST MANAGER:

RVR DISCREPANCY/IMPROVEMENT FORM

SITE: Kansas City, Missouri (MCl)

TEST CATEGORY: c DATE/TIME: 03/24/92 9:15am

TEST AREA: VS and ALS SIE's

TEST PROCEDURES STEP: 3.0.b

DISCREPANCY: The RVR product is affected by the contamination on the window. Snow/rain conditions cause contamination changes.

SUGGESTED ACTION: Investigate gain value setting to obtain accurate RVR products as contamination increases. Prevent snow and rain from affecting the contamination.

IMPROVEMENT RECOMMENDATION:

TEAM LEADER: JtCS RWS

TEST MANAGER:

Non-critical FORM #08

RVR DISCREPANCY/IMPROVEMENT FORM FORM #07 Deleted

SITE: Kansas City, Missouri (MCr)

TEST CATEGORY: d(2) and 0 DATE/TIME: 03/25/92 11:00arn

TEST AREA: ALS SIE

TEST PROCEDURES STEP: 4.0.b(9) and 15.0.a

DISCREPANCY: TI manual calibration procedure 9.7.4.1 is not complete.

SUGGESTED ACTION: Add "remove calibration zero plug" after calibration is complete.

IMPROVEMENT RECOMMENDATION:

TEAM LEADER: HCS RO3

TEST MANAGER:

RVR DISCREPANCY/IMPROVEMENT FORM

SITE: Kansas City, Missouri (MCl)

TEST CATEGORY: d DATE/TIME: 03/19/92 10:OOam

TEST AREA: FAA Facility Standard Drawings

TEST PROCEDURES STEP: 4.0

DISCREPANCY: Some connections shown on drawing D-6282-11 for the remote control displays do not agree with the Instruction book. On the drawing IOC RCD J3-1 is tied to modem 1 pin 1 and J3-5 is tied to modem 2 pin 1. These two connections are not indicated in Instruction book, Table 9-10 and 9-11.

SUGGESTED ACTION: Determine the correct wiring configuration, then correct the drawing or Instruction book as appropriate.

IMPROVEMENT RECOMMENDATION:

TEAM LEADER: HCS R.O.S

TEST MANAGER:

Critical

FORM #10

RVR DISCREPANCY/IMPROVEMENT FORM

SITE: Kansas City, Missouri (Mel)

TEST CATEGORY: _d _ DATE/TIME: 03/19/92 8:00am

TEST AREA: FAA Facility Standard Drawings

TEST PROCEDURES STEP: _4_,_0 __

DISCREPANCY: Drawing 0-6282-11 does not correspond to TI book for the modem 2 connections. The TI book states that pin 3 of modem 2 is connected to RCDl pin 4 and pin 7 of modem 2 is connected to ReO 1 pin 7,

SUGGESTED ACTION: Determine correct wiring configuration, then correct the drawing or TI book as appropriate.

IMPROVEMENT RECOMMENDATION:

TEAM LEAD.ER: 7+CS R05

TEST MANAGER:

RVR DISCREPANCY/IMPROVEMENT FORM

SITE: Kansas City, Missouri (MCI)

TEST CATEGORY: d DATE/TIME: 03/19/92 8:00am

TEST AREA: FAA Facility Standard Drawing

TEST PROCEDURES STEP: 4.0

DISCREPANCY: SIE enclosures do not meet the requirements of specification FAA-E-2772, paragraph 1-3.3.3.14. Insects are entering the enclosures.

SUGGESTED ACTION: Drawings D-6282-3 and D-6282-4 should have notes stating that the conduit openings should be sealed.

IMPROVEMENT RECOMMENDATION:

TEAM LEADER: HCS RWS

TEST MANAGER:

Non-critical

FORM #12

RVR DISCREPANCY/IMPROVEMENT FORM

SITE: Kansas City, Missouri (MCI)

TEST CATEGORY: -=-d _ DATE/TIME: 03/19/92 8:00am

TEST AREA: FAA Facility Standard Drawings

TEST PROCEDURES STEP: 4.0 _

DISCREPANCY: The title for drawing 0-6282-6 does not depict what is shown on this drawing.

SUGGESTED ACTION:

IMPROVEMENT RECOMMENDATION: Change the drawing title to "VS Maintenance Area and Misc. Grounding Detail" and update drawing 0-6282-0.

TEAM LEADER: HCS RWS

TEST MANAGER: CMR

RVR DISCREPANCY/IMPROVEMENT FORM

SITE: Kansas City, Missouri (MCr)

TEST CATEGORY: d DATE/TIME: 03/19/92 8:00am

TEST AREA: FAA Facility Standard Drawings

TEST PROCEDURES STEP: 4.0

DISCREPANCY: The title for Drawing D-6282-3 does not depict what is shown on this drawing.

SUGGESTED ACTION:

IMPROVEMENT RECOMMENDATION: Change the drawing title to "Typical VS and SIE Details" and update drawing D-6282-0.

TEAM LEADER: HCS RWS

TEST MANAGER:

Non-critical FORM #14

RVR DISCREPANCY/IMPROVEMENT FORM

SITE: Kansas City, Missouri (MCI)

TEST CATEGORY: d DATE/TIME: 03/19/92 8:00am

TEST AREA: FAA Facility Standard Drawings

TEST PROCEDURES STEP: 4.0

DISCREPANCY: The VS Sensor Interface Electronics (SIE), ALS SIE, and RLIM SIE are shown with the same part number 860500 on drawing D-6282-2.

SUGGESTED ACTION: All part numbers should be shown in their entirety on this drawing. Part numbers are: VS SIE P/N 860500-1, PM P/N 860526-1, ALS SIE P/N 860500-2, PM P/N 860529-1, RLIM SIE P/N 860500-3 and PM P/N 860532-1. Omit "WITH" between the two unit part numbers. Runway Light Intensity Monitor P/N 860940-1, Current Sensor P/N 860942-1, RLIM 75ft cable P/N 860949-1, Data Processing Unit P/N 860200-1, and Controller Display P/N 860700-1.

IMPROVEMENT RECOMMENDATION:

TEAM LEADER: HCS

TEST MANAGER:

Non-critical FORM #15

RVR DISCREPANCY/IMPROVEMENT FORM

SITE: Kansas City, Missouri (MCr)

TEST CATEGORY: d DATE/TIME: 03/19/92 8:00am

TEST AREA: FAA Facility Standard Drawings

TEST PROCEDURES STEP: 4.0

DISCREPANCY: On drawingD-6282-10 the Lightning Protection Circuitry and terminal strip have no part numbers for the assembly, LPG card, or terminal board. No part number is shown for the AC Surge arrector and the drawing of the AC surge arrector should depict an actual AC arrestor configuration.

SUGGESTED ACTION: Part numbers should be shown for the above items. The part number for the LPC card assembly is PA-32.

IMPROVEMENT RECOMMENDATION:

TEAM LEADER: HCS RWS

TEST MANAGER:

VR DISCREPANCY/IMPROVEMENT FORM

SITE: Kansas City, ssouri (MCI)

TEST CATEGORY: d DATE/TIME: 03/19/92 8:00am

TEST AREA: FAA Faci ty Standard Drawings

TEST PROCEDURES STEP: 4.0

DISCREPANCY: Detai: tiD" on drawing D-6282-3 has dimensions of 3/8" x 16" x 1 3/4" fc the bolt.

SUGGESTED ACTION: Change the bolt dimension from 3/8" x 16" x 1 3/4" to 3/8" - 16 x 1 3/4".

IMPROVEMENT RECOMMENDATION:

TEAM LEADER: HCS ROSS

TEST MANAGER:

RVR DISCREPANCY/IMPROVEMENT FORM

SITE: Kansas City. Missouri (Mel)

TEST CATEGORY: d DATE/TIME: 03/19/92 8:00am

TEST AREA: FAA Facility Standard Drawings

TEST PROCEDURES STEP: 4.0 ----------

DISCREPANCY: Drawing 0-6282-4 shows a tilt adjustment for the ALS head when there is no adjustment.

SUGGESTED ACTION: Omit "adjustable tilt pivot point (6" above horizon adjustment)".

IMPROVEMENT RECOMMENDATION:

TEAM LEADER: HCS RWS

TEST MANAGER:

RVR DISCREPANCY/IMPROVEMENT FORM

SITE: Kansas City, Missouri (MCl)

TEST CATEGORY: d DATE/TIME: 03/19/92 8:00am

TEST AREA: FAA Facility Standard Drawings

TEST PROCEDURES STEP: 4.0

DISCREPANCY: Drawing D-6282-1l has minor errors.

SUGGESTED ACTION: Correct errors listed below: Remote Control Displays: change LCD N ≤ 26 to RCD N ≤ 26. Note 2: change rollout RVR to rollout VS.

IMPROVEMENT RECOMMENDATION:

TEAM LEADER: JCS RWS

TEST MANAGER: CWR

RVR DISCREPANCY/IMPROVEMENT FORM

SITE: Kansas Gity. Missouri (MGl)

TEST CATEGORY: d DATE/TIME: 03/19/92 8:00am

TEST AREA: FAA Facility Standard Drawings

TEST PROCEDURES STEP: 4.0

DISCREPANCY: Drawings D-6282-10 and D-6282-1l shows LPG's used only on one end. For maximum protection LPG's should be used on both ends of a transmission or control line.

SUGGESTED ACTION: Add additional LPG's to drawings D-6282-10 and D-6282-11.

IMPROVEMENT RECOMMENDAnON:

TEAM LEADER: JHCS

TEST MANAGER:

RVR DISCREPANCY/IMPROVEMENT FORM

SITE: Kansas City, Missouri (MCl)

TEST CATEGORY: d DATE/TIME: 03/19/92 8:00am

TEST AREA: FAA Facility Standard Drawings

TEST PROCEDURES STEP: 4.0

DISCREPANCY: Drawing D-6282-l1 shows Lightning Protection Circuits (LPC)s used on the transmission or control lines as a PA 3-18. Detail A shows that the transzorb (TS1) used on the LPC is a 1.5k 22c transzorb. This transzorb is rated at 1500 watts peak pulse power dissipation. From past experience the FAA has found the 1500 watt transzorbs used on previous RVR systems have a high failure rate. (Directive 6990.2, Chapter 64, Change 53, dated 06/16/88.)

SUGGESTED ACTION: Replace the 1500 watt transzorbs with 5000 watt transzorbs.

IMPROVEMENT RECOMMENDATION:

TEAM LEADER: HCS RWS

TEST MANAGER:

RVR DISCREPANCY/IMPROVEMENT FORM

SITE: Kansas City, Missouri (MCT)

TEST CATEGORY: d DATE/TIME: 03/19/92 8:00am

TEST AREA: FAA Facility Standard Drawings

TEST PROCEDURES STEP: 4.0

DISCREPANCY: Drawing D-6282-11, the 1.Sk 22c transzorb's reverse standoff voltage, minimum and maximum breakdown voltage, and maximum clamping voltage, are all higher than those of the IN6043A transzorbs. The PA3-18 LPC will offer little or no lightning protection for the RVR system.

SUGGESTED ACTION: Replace the PA3-l8 with PAS-XX to provide adequate lightning protection.

IMPROVEMENT RECOMMENDATION:

TEAM LEADER: JHCS RWS

TEST MANAGER:

RVR DISCREPANCY/IMPROVEMENT FORM

SITE: Kansas City, Missouri (MCl)

TEST CATEGORY: d DATE/TIME: 03/19/92 8:00am

TEST AREA: FAA Facility Standard Drawings

TEST PROCEDURES STEP: 4.0

DISCREPANCY: Drawing D-6282-3, Note 3 states "Rotate VS fork assembly to true north or within 25 degrees of true north." The tolerance should be much tighter than 25 degrees.

SUGGESTED ACTION: Change tolerance to ±5 degrees.

IMPROVEMENT RECOMMENDATION:

TEAM LEADER: JHCS RWS

TEST MANAGER:

RVR DISCREPANCY/IMPROVEMENT FORM

SITE: Kansas City, Missouri (MCl)

TEST CATEGORY: d DATE/TIME: 03/19/92 8:00am

TEST AREA: FAA Facility Standard Drawings

TEST PROCEDURES STEP: 4.0

DISCREPANCY: Drawing D-6282-3, the front elevation view states that the top of EMT to the ground is 4 feet. This is too low.

SUGGESTED ACTION: Change dimension for top of EM! to the ground from 4 feet: to 6 feet.

IMPROVEMENT RECOMMENDATION:

TEAM LEADER: JCS RWS

TEST MANAGER:

RVR DISCREPANCY/IMPROVEMENT FORM

SITE: Kansas City, Missouri (MCl)

TEST CATEGORY: d DATE/TIME: 03/19/92 8:00am

TEST AREA: FAA Facility Standard Drawings

TEST PROCEDURES STEP: 4.0

DISCREPANCY: Drawing D-6282-3, the side elevation view states that the bottom of the SlE box to the ground is 24 inches. This is much too low for a technician to work on. The SlE box can get covered up with snow.

SUGGESTED ACTION: Change the dimension from the bottom of the SlE box to the ground from 2 feet to 4 feet.

IMPROVEMENT RECOMMENDATION:

TEAM LEADER: HCS RDS

TEST MANAGER:

RVR DISCREPANCY/IMPROVEMENT FORM

SITE: Kansas City, Missouri (Mel)

TEST CATEGORY: d and 0 DATE/TIME: 03/23/92 lO:OOam

TEST AREA: MDT

TEST PROCEDURES STEP: 4.0.b and 15.0.a

DISCREPANCY: The MDT parameters that are displayed do not meet FAA-E-2772, paragraph 1-3.5.4.3.2.15(b) and units are not explained (Boolean).

SUGGESTED ACTION: The MDT should display current values and limits for alarms, and provide an explanation in TI 6560.17.

IMPROVEMENT RECOMMENDATION:

TEAM LEADER: JTCS

TEST MANAGER:

RVR DISCREPANCY/IMPROVEMENT FORM

SITE: Kansas City, Missouri (MCl)

TEST CATEGORY: d and n DATE/TIME: 03/23/92 l2:00pm

TEST AREA: Tl Book 6560.17

TEST PROCEDURES STEP: 4.0.b (9) and 15.0.a

DISCREPANCY: The VS/ALS fault detection data fields display 39 fields on each screen, but only one field out of a total of 78 is used.

SUGGESTED ACTION: Verify requirement for all fields, and delete them if not required.

IMPROVEMENT RECOMMENDATION:

TEAM LEADER: HCS RWS

TEST MANAGER:

RVR DISCREPANCY/IMPROVEMENT FORM

SITE: Kansas City, Missouri (MCI)

TEST CATEGORY: d DATE/TIME: 03/19/92 9:30am

TEST AREA: TI Book 6560.17

TEST PROCEDURES STEP: 4.0 b(9)

DISCREPANCY: The external users modem setting for switch #1 is not correct in paragraph 9.s.S.h.

SUGGESTED ACTION: Correct II book, paragraph 9.s.s.h to show the setting for the EU modem switch #1 which is "down".

IMPROVEMENT RECOMMENDATION:

TEAM LEADER: HCS RWS

TEST MANAGER:

RVR DISCREPANCY/IMPROVEMENT FORM

SITE: Kansas City, Missouri (MCl)

TEST CATEGORY: d DATE/TIME: 03/19/92 9:30am

TEST AREA: TI Book 6560.17

TEST PROCEDURES STEP: 4.0 b(3)

DISCREPANCY: Technical Instruction Book, Table 3-2 needs additional information for connecting and using the MDT.

SUGGESTED ACTION:

IMPROVEMENT RECOMMENDATION: Add to figure 3-2: Ref 6, MDT, Band Rate 9600, 8 start bits, no parity, one stop bit, FOX. When connecting to the DPU of SIE from a dumb terminal without a modem.

TEAM LEADER: HCS

TEST MANAGER:

RVR OISCREPANCY/IMPROVEI'1ErH FORM

SITE: Kansas City, Missouri (MCI)

TEST CATEGORY: d DATE/TIME: 03/19/92 9: 30arn

TEST AREA: II Book 6560.17

TEST PROCEDURES STEP: 4.0

DISCREPANCY: The II book does not list the MDT set-up for the external users port.

SUGGESTED ACTION: Specify in the TI book that when a modem is to be used with the MDT or external users port, the terminal must be set up to use 8 data bits, no parity, 1 stop bit, and a band rate of 1200 band.

IMPROVEMENT RECOMMENDATION:

TEAM LEADER: HCS RWS

TEST MANAGER:

RVR DISCREPANCY/IMPROVEMENT FORM

SITE: Kansas City, Missouri (MCI)

TEST CATEGORY: d DATE/TIME: 03/18/92 8:00am

rEST AREA: II Book 6560.17

TEST PROCEDURES STEP: 4.0.6

DISCREPANCY: The II book does not provide a figure to show the screen presentation for the external users port.

SUGGESTED ACTION: Add to the II book a figure which shows the screen presentation for the external users port.

Example: Sxhhmrnss/9R60+60+60+000/L60+60+60+0000960+ExbE

IMPROVEMENT RECOMMENDATION:

TEAM LEADER: HCS RWS

TEST MANAGER:

RVR DISCREPANCY/IMPROVEMENT FORM

SITE: Kansas City, Missouri (MCl)

TEST CATEGORY: d DATE/TIME: 03/18/92 8:00am

TEST AREA: Off-site TI Book

TEST PROCEDURES STEP: 4.0

DISCREPANCY: No off-site book was available for the shakedown testing on the RVR.

SUGGESTED ACTION: Obtain the off-site book for review and validation.

IMPROVEMENT RECOMMENDATION:

TEAM LEADER: HCS RWS

TEST MANAGER:

Non-critical

FORM #32

RVR DISCREPANCY/IMPROVEMENT FORM

SITE: Kansas City, Missouri (MCI)

TEST CATEGORY: -=d

DATE/TIME: 03/23/92 3:30pm

TEST AREA: Off-site II Book

TEST PROCEDURES STEP: 4.0

DISCREPANCY: Failure of one transzorb may not be detectable by the system operation or fault diagnostics.

SUGGESTED ACTION:

IMPROVEMENT RECOMMENDATION: The off-site manual should state that the shop technicians should check surge protection on SIC cards while repairing.

TEAM LEADER: HCS RWS

TEST MANAGER:

RVR DISCREPANCY/IMPROVEMENT FORM

SITE: Kansas City, Missouri (Mel)

TEST CATEGORY: d a n d o DATE/TIME: 03/18/92 03/27/92

TEST AREA: MPU. PPUA, PPUB, and all SIE'S

TEST PROCEDURES STEP: 4.0.b and 15.0.a

DISCREPANCY: On the Parameters Value and Fault Diagnostic screens, it is not clear what the warned-high, warned-low, alarmed-high, and alarmed-low messages indicate. Sometimes the system is taken-off with a warning, and sometimes with an alarm. The on-site instruction book does not address these messages.

SUGGESTED ACTION: Verify that the messages are correct. obtain adequate information on these messages, and change TI 6560.17 as appropriate to address these messages.

IMPROVEMENT RECOMMENDATION:

TEAM LEADER: H.C.S

TEST MANAGER:

RVR DISCREPANCY/IMPROVEMENT FORM

SITE: Kansas City, Missouri (MCl)

TEST CATEGORY: d and 0 DATE/TIME: 03/26/92 3:30pm

TEST AREA: MDT at DPU

TEST PROCEDURES STEP: 4.0.b and 15.0.a

DISCREPANCY: The help screen contains errors and is misleading. Examples: 1. Control; incidents cannot be declared. 2. Parameters; cannot "set" parameter values. 3. Product Edit; override failure of an SlE, not a failed product. 4. Fault Diag; Report not used; etc.

SUGGESTED ACTION: Contractor should review software/firmware associated with Help Screen and correct as required. Tl 6560.17 page 9-72 will need to be changed to incorporate the corrections.

IMPROVEMENT RECOMMENDATION:

TEAM LEADER: HCS RWS

TEST MANAGER: [illegible]

RVR DISCREPANCY/IMPROVEMENT FORM

SITE: Kansas City, Missouri (Mel)

TEST CATEGORY: f DATE/TIME: 03/23/92 10:OOarn

TEST AREA: Provisioning Conference

TEST PROCEDURES STEP: 6.0.a

DISCREPANCY: A provisioning conference has not been held.

SUGGESTED ACTION: Hold a provisioning conference so national stock numbers can be loaded and part quantities bought.

IMPROVEMENT RECOMMENDATION:

TEAM LEADER: HCS

TEST MANAGER:

RVR DISCREPANCY/IMPROVEMENT FORM

SITE: Kansas City, Missouri (Mel)

TEST CATEGORY: f DATE/TIME: 03/18/92 lO:OOam

TEST AREA: Training

TEST PROCEDURES STEP: 6.0.d

DISCREPANCY: Component Level/Automatic Test Equipment/Automatic Test Station training has not been obtained by the support organizations to maintain the RVR equipment.

SUGGESTED ACTION: Obtain training as soon as possible for field support of equipmentr

IMPROVEMENT RECOMMENDATION:

TEAM LEADER: HCS RDS

TEST MANAGER:

RVR DISCREPANCY/IMPROVEMENT FORM

SITE: Kansas City, Missouri (MCl)

TEST CATEGORY: h DATE/TIME: 03/19/92 9:15am

TEST AREA: Controller Display

TEST PROCEDURES STEP: 9.0.d

DISCREPANCY: CD test button displays 9 data fields which should stay zeroed, but field #2 the external DART time test will not stay zeroed. The TI book paragraph 6.4.e refers one to 7.5.6 which does not address this problem. When the DPU power was turned off the field #2 stopped incrementing.

SUGGESTED ACTION: Determine and explain in the On-site TI 6560.17 the CD On-line BIT test fields.

IMPROVEMENT RECOMMENDATION:

TEAM LEADER: JtCS RWS

TEST MANAGER: DWR

RVR DISCREPANCY/IMPROVEMENT FORM

SITE: Kansas City, Missouri (MCl)

TEST CATEGORY: i DATE/TIME: 03/19/92 9:30am

TEST AREA: Controller Display

TEST PROCEDURES STEP: 1O.D.c

DISCREPANCY: The CD health LED and AC power switch lighting is too bright.

SUGGESTED ACTION:

IMPROVEMENT RECOMMENDATION: Modify equipment to reduce intensities and allow for adjusting intensities.

TEAM LEADER: JHCS

TEST MANAGER:

RVR DISCREPANCY/IMPROVEMENT FORM

SITE: Kansas City. Missouri (MCr)

TEST CATEGORY: _____ DATE/TIME: 03/25/92 9: 45am

TEST AREA: DPU

TEST PROCEDURES STEP: 8.0.f

DISCREPANCY: To check the DPU power supply voltages on the roc CCA as specified by the instruction book paragraph 6.3.6.3 and 7.S.S.c. the technician must use the test points. The test points on the IOC CCA are inconvenient and almost inaccessible. These test points are covered and do Dot meet FAA-E-2772 paragraph 1-3 3 3 11 requirements

SUGGESTED ACTION: _____

IMPROVEMENT RECOMMENDATION: Provide an adaptor to provide easier access to these test points.

TEAM LEADER: JtCS RWS

TEST MANAGER: KWR

RVR DISCREPANCY/IMPROVEMENT FORM

SITE: Kansas City, Missouri (MCl)

TEST CATEGORY: j DATE/TIME: 03/18/92 1:30pm

TEST AREA: SIE's

TEST PROCEDURES STEP: 8.0.a, b, c, and d

DISCREPANCY: The MDT connector on the SIE is not in a convenient location. It is difficult to connect to when performing maintenance, There will be complaints by technicians and employee suggestions to relocate this connector or to make it easier to use.

SUGGESTED ACTION: Relocate the SIE MDT connector to a more convenient location or obtain an adaptor to make it easier to use.

IMPROVEMENT RECOMMENDATION:

TEAM LEAOER: HCS RWS

TEST MANAGER: [illegible]

RVR DISCREPANCY/IMPROVEMENT FORM

SITE: Kansas City, Missouri (Mel)

TEST CATEGORY: j DATE/TIME: 03/23/92 4:15pm

TEST AREA: Personality Module for the SIE's

TEST PROCEDURES STEP: 8.0.a, b, c, and d

DISCREPANCY: Test points are not buffered on PM causing the system to take SIE off-line. Does not agree with FAA-E-2772 paragraph 1-3.3.3.11.

SUGGESTED ACTION: Verify contract requirements and consider correcting if required.

IMPROVEMENT RECOMMENDATION:

TEAM LEADER: JHCS

TEST MANAGER:

RVR DISCREPANCY/IMPROVEMENT FORM

SITE: Kansas City, Missouri (MCl)

TEST CATEGORY: j and p DATE/TIME: 03/23/92 1:30pm

TEST AREA: SlE Cabinets

TEST PROCEDURES STEP: 8.0, a, b, c, and 16.0

DISCREPANCY: There is significant rusting at mounting brackets, hinges, welds, washers, and nuts of the SlE cabinets installed outside.

SUGGESTED ACTION: Determine if cabinets and finish meet the requirements of the contract *and/or* take actions necessary to prevent rusting.

IMPROVEMENT RECOMMENDATION:

TEAM LEADER: JCS RWS

TEST MANAGER: CWR

RVR DISCREPANCY/IMPROVEMENT FORM

at 1500 watts peak pulse power dissipation. From past experience the FAA has found that the 1500 watt transzorbs that were used on previous RVR systems have a high faiJl!re rate Modificatjon directive 6990 2 Chapter 64, Change 53 dated 06/16/88 was issued to replace the J500 watt transzorbs with 5000 watt transzorbs

SUGGESTED ACTION: Replace the IN6043A transzorbs with transzorbs rated at 5000 watts.

IMPROVEMENT RECOMMENDATION:

TEAM LEADER: HCS RWS

rEST MANAGER: DWR

RVR DISCREPANCY/IMPROVEMENT FORM

SITE: Kansas City, Missouri (MCl)

TEST CATEGORY: j DATE/TIME: 03/24/92 lO:30am

TEST AREA: VS SIE

TEST PROCEDURES STEP: 8.0.b

DISCREPANCY: Contamination gain value is incorrect such that the window contamination affects the RVR product.

SUGGESTED ACTION: Determine correct contamination gain value, set value accordingly, and change TI 6560.17.

IMPROVEMENT RECOMMENDATION: Assure that the DPU RAM configuration has contamination gain set to this value when deployed.

TEAM LEADER: HCS RWS

TEST MANAGER:

RVR DISCREPANCY/IMPROVEMENT FORM

SITE: Kansas City, Missouri (MCl)

TEST CATEGORY: _____ DATE/TIME: 03/25/92 1:00pm

TEST AREA: RLIM

TEST PROCEDURES STEP: 8.0.c

DISCREPANCY: The RLIM SlE diagnostics screen, figure 7-23 in Tl book, does not display the DC voltage being monitored in some cases.

Example: DC-plus-12 4.010 volts ok

DC-minus-12 4.000 volts ok

SUGGESTED ACTION: Correct the software discrepancy or change the instruction book to explain the apparent error.

IMPROVEMENT RECOMMENDATION: _____

TEAM LEADER: HCS RWS

TEST MANAGER: [signature]

RVR DISCREPANCY/IMPROVEMENT FORM

SITE: Kansas City, Missouri (MCl)

TEST CATEGORY: j DATE/TIME: 03/18/92 1:30pm

TEST AREA: VS SlE Calibration Assembly

TEST PROCEDURES STEP: 8.0.b

DISCREPANCY: The VS Calibration assembly is not durable enough for sustained field usage. The top knob does not have enough threads to hold. The calibration bars upper and lower readings are printed upside down.

SUGGESTED ACTION: Make VS Calibration assembly more durable. The knob must have a longer bolt or a thinner spacer to provide more thread length. Correct printing of upper and lower readings.

IMPROVEMENT RECOMMENDATION:

TEAM LEADER: HCS

TEST MANAGER:

RVR DISCREPANCY/IMPROVEMENT FORM

SITE: Kansas City, Missouri (MCl)

TEST CATEGORY: k DATE/TIME: 03/18/92

TEST AREA: Declaring an incident

TEST PROCEDURES STEP: 11.0.a=--

DISCREPANCY: An incident must be declared within one hour to obtain the most informative data.

SUGGESTED ACTION: Consideration should be given to changing the software so that an incident can be declared four or more hours after an incident occurs.

IMPROVEMENT RECOMMENDATION: Perhaps allow the personnel at the MPS to declare an incident.

TEAM LEADER: HCS

TEST MANAGER:

RVR DISCREPANCY/IMPROVEMENT FORM

SITE: Kansas City, Missouri (MCl)

TEST CATEGORY: c and k DATE/TIME: 03/18/92 4:00pm

TEST AREA: SIE

TEST PROCEDURES STEP: 11.0(a) and 3.b

DISCREPANCY: Removing the EM! cover of the SIE cabinet is a safety problem. Tl book paragraph 7.5.1 a and b never states that the terminals of the AUX power CB and AC power CB are still hot. Terminals can come into contact with the chassis and technician.

SUGGESTED ACTION: Terminals should be well insulated.

IMPROVEMENT RECOMMENDATION:

TEAM LEADER: HCS RWS

TEST MANAGER:

RVR DISCREPANCY/IMPROVEMENT FORM

SITE: Kansas City, Missouri (MCr)

TEST CATEGORY: k DATE/TIME: 03/18/92 4:00pm

TEST AREA: ALS/VS SIE's

TEST PROCEDURES STEP: 11.0.b

DISCREPANCY: The ALS and VS SIE batteries do not keep the units on-line when AC power is lost as they should per FAA-E-2772, paragraph 1-3.2.2.2.

SUGGESTED ACTION: Correct system battery operation so that the units continue to run for four hours.

IMPROVEMENT RECOMMENDATION:

TEAM LEADER: HCS RWS

TEST MANAGER:

RVR DISCREPANCY/IMPROVEMENT FORM

SITE: Kansas City, Missouri (MCI)

TEST CATEGORY: k DATE/TIME: 03/19/92 9:15am

TEST AREA: Controller Display

TEST PROCEDURES STEP: 11.O.b

DISCREPANCY: In a power bump the CD loses all information.

SUGGESTED ACTION: Add a battery backup to the CD so it will not lose information.

IMPROVEMENT RECOMMENDATION:

TEAM LEADER: HCS RWS

TEST MANAGER:

RVR DISCREPANCY/IMPROVEMENT FORM FORM #51 Deleted

SITE: Kansas City, Missouri (MC1)

TEST CATEGORY: 1 (1) DATE/TIME: 03/18/92

TEST AREA: SIE

TEST PROCEDURES STEP: 12.0.a(1)

DISCREPANCY: The SIE battery can be disconnected from the unit and there is no warning or alarm indication of this condition from either the DPU, parameters value screens, or the SIE diagnostic screen.

SUGGESTED ACTION: Correct software/hardware to recognize low battery while on AC power.

IMPROVEMENT RECOMMENDATION:

TEAM LEADER: HCS

TEST MANAGER:

RVR DISCREPANCY/IMPROVEMENT FORM

SUGGESTED ACTION:

IMPROVEMENT RECOMMENDATION: The security level assigned an individual, should automatically be established at log on.

TEAM LEAD.ER: HCS RDS

TEST MANAGER:

RVR DISCREPANCY/IMPROVEMENT FORM

SITE: Kansas City, Missouri (MCl)

TEST CATEGORY: _1_.4 _ DATE/TIME: 03/25/92 1:00pm

TEST AREA: Controller Display

TEST PROCEDURES STEP: 12.0.a (4)

DISCREPANCY: The RLIM sensor can be shorted, opened, or disconnected and it is not detected on step O. On steps 3, 4, or 5 the RVR product can read lower than it actually is.

SUGGESTED ACTION: Correct software for adequate fault detection and fail-safe operation. Correct software to display FF's when RLIM is not working properly.

IMPROVEMENT RECOMMENDATION:

TEAM LEAD.ER: 7-CS RWS

TEST MANAGER:

RVR DISCREPANCY/IMPROVEMENT FORM

SITE: Kansas City, Missouri (MCl)

TEST CATEGORY: 1 (4) DATE/TIME: 03/26/92 1:00pm

TEST AREA: RLIM

TEST PROCEDURES STEP: 12.0.a(4)

DISCREPANCY: After diagnostics are run on an RLIM from the DPU, the diagnostics screen indicates the RLIM is off-line with an SIE enclosure faulty LRU, but the status screen and parameters value screens indicated that the RLIM is on-line.

SUGGESTED ACTION: Correct the software/firmware discrepancy in the fault diagnostics.

IMPROVEMENT RECOMMENDATION:

TEAM LEADER: JHCS RWS

TEST MANAGER:

RVR DISCREPANCY/IMPROVEMENT FORM

SITE: Kansas City. Missouri (MGl)

TEST CATEGORY: 1 (4) and 0 DATE/TIME: 03/25/92

TEST AREA: Diagnostics screen at DPU

TEST PROCEDURE STEP: 12.0.a (4) and 15.0.a

DISCREPANCY: On the fault-diagnostics screen at the DPU the difference between the unit tests and the unit loopback tests are not explained in TI 6560.17, paragraph 7.6.2.

SUGGESTED ACTION:

IMPROVEMENT RECOMMENDATION: The fault diagnostics screen must be explained in TI 6560.17.

TEAM LEADER: JKCS

TEST MANAGER:

RVR DISCREPANCY/IMPROVEMENT FORM

SITE: Kansas City, Missouri (MCI)

TEST CATEGORY: _o _ DATE/TIME: 03/23/92 2:25pm

TEST AREA: VS SIE

TEST PROCEDURES STEP: 15 (a)

DISCREPANCY: On the Sensor Data Quality Checks (DQC) there is no DQC warning or alarm indications when the VS Sensor consistently low value is exceeded.

SUGGESTED ACTION: Verify proper operation and correct software if required.

IMPROVEMENT RECOMMENDATION:

TEAM LEADER: JHCS

TEST MANAGER:

RVR DISCREPANCY/IMPROVEMENT FORM

SITE: Kansas City, Missouri (MGl)

TEST CATEGORY: 0 DATE/TIME: 03/18/92 11:30am

TEST AREA: EPROMs

TEST PROCEDURES STEP: 15.0.a

DISCREPANCY: Prior to the start of NAS OT&E/Integration and Shakedown testing EPROMs in the PPUA, PPUB, MPU, and RLIM were replaced with different revision EPROMs for confidence testing only.

SUGGESTED ACTION: Shakedown testing will continue after production EPROMs are provided.

IMPROVEMENT RECOMMENDATION:

TEAM LEADER: JTCS RWS

TEST MANAGER:

RVR DISCREPANCY/IMPROVEMENT FORM

SITE: Kansas City, Missouri (MCl)

TEST CATEGORY: • DATE/TI!,vlE: 03/20/92 9: 30am

TEST AREA: ALS SIE

TEST PROCEDURES STEP: 15 (a)

DISCREPANCY: The Data Quality Check (DQC) unvarying value, for an active, alive, normal ALS sensor caused the sensor to be taken off-line. The DQC unvarying value for an inactive, dead sensor would not cause the sensor to be taken off-line.

SUGGESTED ACTION: Correct software/firmware to give a warning, but not take an active normal ALS SIE off-line.

IMPROVEMENT RECOMMENDATION:

TEAM LEADER: JHCS RDS

TEST MANAGER:

RVR DISCREPANCY/IMPROVEHEHT FORM

SITE: Kansas City, Missouri (MGl)

TEST CATEGORY: d (2) and 0 DATE/TIME: 03/25/92

TEST AREA: ALS SIE

TEST PROCEDURES STEP: 4.0:b and 15.0.a

DISCREPANCY: The ALS SIE calibration, screen 9, refers to a lens cap rather than a zero plug. There is no lens cap. Also the procedure never states to remove the zero plug at the end of the procedure.

SUGGESTED ACTION:

IMPROVEMENT RECOMMENDATION: Change the software and TI book to state "Install zero plug" instead of "Install lens cap" and add "Remove zero plug" at the end of the procedure.

TEAM LEADER: HCS RWS

TEST MANAGER:

RVR DISCREPANCY/IMPROVEMENT FORM

SITE: Kansas City, Missouri (MCl)

TEST CATEGORY: 0 DATE/TIME: 03/25/92 2:25pm

TEST AREA: VS SIE

TEST PROCEDURES STEP: 15(a)

DISCREPANCY: The Data Quality Check (DQC) VS Cross-Consistency limit was checked using two VS's. Both went off-line. but then came back on-line when there was still a large differential.

SUGGESTED ACTION: Determine requirements for cross-consistency limits, and change software/firmware as required.

IMPROVEMENT RECOMMENDATION:

TEAM LEADER: JHCS RWS

TEST MANAGER: GWR

RVR DISCREPANCY/IMPROVEMENT FORM

SITE: Kansas City. Missouri (MCl)

TEST CATEGORY: 0 DATE/TIME: 03/25/92 2:25pm

TEST AREA: VS SIE

TEST PROCEDURES STEP: 15 (a)

DISCREPANCY: On the Sensor Data Quality Check (DQC) there was no DQC warning or alarm when the VS Lower limit was exceeded.

SUGGESTED ACTION: Verify proper operation and correct software if required.

IMPROVEMENT RECOMMENDATION:

TEAM LEADER: JHCS RWS

TEST MANAGER:

Non-critical FORM #63

RVR DISCREPANCY/IMPROVEMENT FORM

SITE: Kansas City, Missouri (MCl)

TEST CATEGORY: o DATE/TIME: 03/20/92 8:15am

TEST AREA: ALS SIE

TEST PROCEDURES STEP: J5 0 a

DISCREPANCY: On the Sensor Data Quality Check (DQC) there was no DOC warning or alarm when the ALS Sensor Consistently Low Value was exceeded.

SUGGESTED ACTION: Verify proper operation and correct software if required.

IMPROVEMENT RECOMMENDATION:

TEAM LEADER: HCS RWS

TEST MANAGER:

RVR DISCREPANCY/IMPROVEMENT FORM

SITE: Kansas City, Missouri (MCl)

TEST CATEGORY: 0 DATE/TIME: 03/20/92 8:15am

TEST AREA: ALS SIE

TEST PROCEDURES STEP: 15 (a)

DISCREPANCY: On the Sensor Data Quality Checks (DQC) there was no DQC warning or alarm when the ALS Lower DQC limit was exceeded.

SUGGESTED ACTION: Verify proper operation and correct software if required.

IMPROVEMENT RECOMMENDATION:

TEAM LEADER: JHCS RWS

TEST MANAGER:

RVR DISCREPANCY/IMPROVEMENT FORM

SITE: Kansas City, Missouri (MCl)

TEST CATEGORY: o DATE/TIME: 03/23/92 2:45pm

TEST AREA: VS SIE

TEST PROCEDURES STEP: 15 Ca)

DISCREPANCY: The Data Quality Check (DQC) unvarying value, for an active, alive, normal, VS sensor caused the sensor to be taken off-line. The DQC unvarving value for an inactive dead sensor would not cause the sensor to be taken off-line

SUGGESTED ACTION: Correct software/firmware give a warning, but not take an active normal VS SIE off-line.

IMPROVEMENT RECOMMENDATION:

TEAM LEAD.ER: HCS

TEST MANAGER:

RVR DISCREPANCY/IMPROVEMENT FORM

SITE: Kansas City, Missouri (MCl)

TEST CATEGORY: 0 DATE/TIME: 03/19/92 11:00am

TEST AREA: VS/ALS and RLIM SlE's

TEST PROCEDURES STEP: 15.0.a

DISCREPANCY: The PS Temp, PS Heater, and PS Batt Temp status were monitored with the old power supply. These items are no longer applicable with the new power supply.

SUGGESTED ACTION: Change software/firmware to remove PS Temp, PS Heater, and PS Batt Temp (and associated items) for all screens.

IMPROVEMENT RECOMMENDATION:

TEAM LEADER: THS RWS

TEST MANAGER:

RVR DISCREPANCY/IMPROVEMENT FORM

SITE: Kansas City, Missouri (MCI)

TEST CATEGORY: j (5) DATE/TIME: 09/01/92 3:45 PM

TEST AREA: Controller Display

TEST PROCEDURE STEP: 8.0 e

DISCREPANCY: There is no audible alarm when the Controller Oisolay presents all FEE's (for the RYR product) as a result of equipment failures.

SUGGESTED ACTION: Correct the software so that the CD wjll alarm when all FEE's are presented if required by the contract specifications/chances.

TEAM LEADER:

TEST MANAGER: RUS

RVR DISCREPANCY/IMPROVEMENT FORM

SITE: Kansas City. Missouri (MCI)

TEST CATEGORY: o and d(1) DATE/TIME: 09/04/92 9:30 AM

TEST AREA: Software

TEST PROCEDURE STEP: 15.0 and 4.0 (b)

DISCREPANCY: The corrected and uncorrected extinction coefficients remain the same value before the rain filter time Qut.

SUGGESTED ACTION: Inyestigate why the extinction coefficjents remained the same. correct if necessary. and if correct exolain in the instruction book.

IMPROVEMENT RECOMMENDATION:

TEAM LEADER:

TEST MANAGER: f

RVR DISCREPANCY/IMPROVEMENT FORM

SITE: Kansas City, Missouri (MCIl

TEST CATEGORY: 0 DATE/TIME: 09/04/92 5:00 PM

TEST AREA: Software

TEST PROCEDURE STEP: 15.0 c

DISCREPANCY: The one-hour RVR product archive dump runs in an infinite loop.

SUGGESTED ACTION: Determjne problem and if appropriate correct the one-hour archive so that the software will not run in an infinite loop.

IMPROVEMENT RECOMMENDATION:

TEAM LEADER:

TEST MANAGER: Klus

RVR DISCREPANCY/IMPROVEMENT FORM

SITE: Kansas Citv. Missouri (MCI)

TEST CATEGORY: c (1) DATE/TIME: 09/02/92 3:30 PM

TEST AREA: ALS

TEST PROCEDURE STEP: 3.0 (b)

DISCREPANCY: With the rain filter time delay set to zero. the ALS was sprayed with water to a wjndow contamination of 83, The CO djsplayed FFE's for onlY the midooint of both runways. *

* Note: Problem was not repeatable durina additional testing.

SUGGESTED ACTION: Inyestigate and correct the software so when the AI S is taken off-line it disolavs all FFE's on the CO.

IMPROVEMENT RECOMMENDATION:

TEAM LEADER:

TEST MANAGER:

RVR DISCREPANCY/IMPROVEMENT FORM

SITE: Kansas City, Missouri (MCT)

rEST CATEGORY: d (1) DATE/TIME: 09/03/92 11:00 AM

TEST AREA: Visjbility Sensor

TEST PROCEDURE STEP: 4.0 (b)

DISCREPANCY: After the window was cleaned on the transmitter. it took approximately 5 mjnutes for the window contamination yalye to retyrn to normal.

SUGGESTED ACTION: Correct the algorithm and/or correct the instruction book to explain this unexpected result.

IMPROVEMENT RECOMMENDATION:

TEAM LEADER: _____

TEST MANAGER: _____

RVR DISCREPANCY/IMPROVEMENT FORM

SITE: Kansas Citv. Missouri (MCI)

TEST CATEGORY: j (1) DATE/TIME: 09/04/92 12:30 PM

TEST AREA: VS

TEST PROCEDURE STEP: 8.0 (b)

DISCREPANCY: The four VS extinction coefficients were different on a bright sunny day with wjndows clean. Tbis was not the case in the previous OT&E testino.

Examole:	VS SIE 01 - 6	a minute later:	VS SIE 01 - 11
	VS SIE 02 - 8		vs SIE 02 - 2
	VS SIE 03 - 22		VS SIE 03 - 10
	VS SIE 04 - 8		VS SIE 04 - 25

SUGGESTED ACTION: Inyestigate the hardware/software to jdentify the oroblem and correct as required.

IMPROVEMENT RECOMMENDATION:

TEAM LEADER:

TEST MANAGER:

RVR DISCREPANCY/IMPROVEMENT FORM

SITE: Kansas City, Missouri (MCl)

TEST CATEGORY: o and d (1) DATE/TIME: 09/04/92 2:00 PM

TEST AREA: Software

TEST PROCEDURE STEP: 15.0 (a) and 4.0 (b)

DISCREPANCY: The rain event filter and snow cloaaino filter periods do not operate as suggested on the OpU screen 21. The proper settings have not been provided for use in the installation section and the maintenance handbook.

SUGGESTED ACTION: The filter periods should operate as indicated for all possible combinations. The instruction book needs to have detailed information about the filter oeriods and their settinas.

IMPROVEMENT RECOMMENDATION:

TEAM LEADER:

TEST MANAGER:

RVR DISCREPANCY/IMPROVEMENT FORM

SITE: Kansas City, Missouri (MCI)

TEST CATEGORY: j (5) DATE/TIME: 09/01192 4:00 PM

TEST AREA: Controller Display

TEST PROCEDURE STEP: 8.0 (e)

DISCREPANCY: A fail 8. OPU Cable fault. problem will not clear its self when the problem has been corrected The operator must press the RVR pushbutton on the CD keypad to clear the disolay. The instruction book does not exolain this.

SUGGESTED ACTION: Correct this problem or put a statement in the instruction book advisina how to clear this fault.

IMPROVEMENT RECOMMENDATION:

TEAM LEADER: !-1

TEST MANAGER: KCS

RVR DISCREPANCY/IMPROVEMENT FORM

SITE: Kansas City, Missouri (Men

TEST CATEGORY: ¡ (5) DATE/TIME: 09/04/92 4:00 PM

TEST AREA: Controller Djsplay

TEST PROCEDURE STEP: 8.0 (e)

DISCREPANCY: There is no audible alarm with a fail I two minute DPU timeout. The jnstructjon bopk states that there is an alarm for all fault tests,

SUGGESTED ACTION: Correct fail 1 so that there is an aydjble alarm, Verify that all fault tests have an audible alarm.

IMPROVEMENT RECOMMENDATION:

TEAM LEADER:

TEST MANAGER:

RVR DISCREPANCY/IMPROVEMENT FORM

SITE: Kansas City, Missouri (MCI)

TEST CATEGORY: i (1) and a (2) DATE/TIME: 09/04/92 3:00 PM

TEST AREA: ALS and VS SIE

TEST PROCEDURE STEP: 8.0 (a) and 15.0 (b)

DISCREPANCY: On the VS SIE MDT main menu one of the options is 'F'for Fault Data. but when selected the screen title is Fault Detection,

SUGGESTED ACTION: The screen title and menu opt jon shoyld be consjstent,

IMPROVEMENT RECOMMENDATION:

TEAM LEADER:

TEST MANAGER:

RVR DISCREPANCY/IMPROVEMENT FORM

SITE: Kansas City, Missouri (MCI)

TEST CATEGORY: d (1) DATE/TIME: 09/03/92 5:00 PM

TEST AREA: TI Book 6560,]]

TEST PROCEDURE STEP: 4.0 (b)

DISCREPANCY: The instruction book does not exolain how much data is retrieved when various archive dumps are made.

SUGGESTED ACTION: The jnstructjon book should describe the amount of data retrieved for the I-minute RVR oroduct, 5-minute RVR product, and the I-hour RVR product dumps.

IMPROVEMENT RECOMMENDATION:

TEAM LEADER:

TEST MANAGER:

RVR DISCREPANCY/IMPROVEMENT FORM

SITE: Kansas City, Missouri (MCI)

TEST CATEGORY: d (1) DATE/TIME: 09/03/92 5:00 PM

TEST AREA: TI Book 6560,17

TEST PROCEDURE STEP: 4.0 (b)

DISCREPANCY: The instruction book does not explain how much or what kind of data is retrieved when an incident is declared

SUGGESTED ACTION: The instruction book should explain what happens when an incident is declared.

IMPROVEMENT RECOMMENDATION:

TEAM LEADER:

TEST MANAGER:

RVR DISCREPANCY/IMPROVEMENT FORM

SITE: Kansas City, Missouri (MeT)

TEST CATEGORY: d (1) DATE/TIME: 09/01/92 1:00 PM

TEST AREA: TI Book 6560,17

TEST PROCEDURE STEP: 4.0 (b)

DISCREPANCY: The instruction book. Paraaraph 3.5.4.1 states the followina: "If an self-test routines are successfully completed. the Health (ED is illuminated .. ,". The health LED is illuminated as soon as the power switch is turned on and not after the self-test routines are comoleted.

SUGGESTED ACTION:

IMPROVEMENT RECOMMENDATION: Verify operation of health LED and correct TI book if approoriate.

TEAM LEADER:

TEST MANAGER:

RVR DISCREPANCY/IMPROVEMENT FORM

SITE: Kansas City. Missouri fMCl}

TEST CATEGORY: o DATE/TIME: 09/04/92 1:00 PM

TEST AREA: Software

TEST PROCEDURE STEP: 15:0 (a)

DISCREPANCY: The calculation for the RVR product should use the lower of the edge and centerline light settings. but the higher is used when the edge lights are set to a hiaher intensity than the centerline liahts.

SUGGESTED ACTION: Correct the software to use the lower of the edge and centerline liaht settings for the RVR product.

IMPROVEMENT RECOMMENDATION:

TEAM LEADER:

TEST MANAGER:

RVR DISCREPANCY/IMPROVEMENT FORM

SITE: Kansas City. Missouri (Men

TEST CATEGORY: o DATE/TIME: 09/02/92 8:00 AM

TEST AREA: Software

TEST PROCEDURE STEP: 15:0 (a)

DISCREPANCY: With an ambient lioht reading of 1 footlambert and no runway lights on the RYR prQduct was 00 feet. Wjth an ambjent light reading of 2 fQotlamberts and no runway liahts On the RVR prQduct was 60+. The test team questions whether a pilot could actually see a mile or more down the runway when the ambient light reading is 2 footlamberts with no runway ljghts on.

SUGGESTED ACTION: Verify the algorithm *andlor* software reQyjres for this condition and correct if aporopriate.

IMPROVEMENT RECOMMENDATION:

TEAM LEADER:

TEST MANAGER:

RVR DISCREPANCY/IMPROVEMENT FORM

SITE: Kansas City, Missouri (MCl)

TEST CATEGORY: i (1), i (2), and o DATE/TIME: 12/02/92 9:00 AM

TEST AREA: ALS and YS SIE

TEST PROCEDURE STEP: 8.0 (a), 8.0 (b). and 15.0 fa)

DISCREPANCY: When a change is executed on the Configuration SIE Parameters screen the MDT goes off-line. This also occurs on the manyaJ edit screen,

SUGGESTED ACTION: Correct software so the Configuration SIE Parameters screen and manual edit screen stay on-line wgeb a change is executed.

IMPROVEMENT RECOMMENDATION:

TEAM LEADER: _"

TEST MANAGER:

RVR DISCREPANCY/IMPROVEMENT FORM

SUGGESTED ACTION: Include this screen in the instruction book.

IMPROVEMENT RECOMMENDATION:

TEAM LEADER:

TEST MANAGER:

RVR DISCREPANCY/IMPROVEMENT FORM

SITE: Kansas Ci tv, Mi ssour; (MeT)

TEST CATEGORY: ¡ (4) and p DATE/TIME: 12/02/92 3:30 PM

TEST AREA: ALS and YS SIr

TEST PROCEDURE STEP: 8.0 fal, 8.0 fbI. 8.0 (cl, and 16.0

DISCREPANCY: There is no mechanism to hold the SIE cabinet door open.

IMPROVEMENT RECOMMENDATION:

TEAM LEADER:

TEST MANAGER:

Form #86

RVR DISCREPANCY/IMPROVEMENT FORM

SITE: Kansas City, Missouri (MCll

TEST CATEGORY: 0 DATE/TIME: 12/01/92 8:00 AM

TEST AREA: Software/Firmware

TEST PROCEDURE STEP: 15.0 (a)

DISCREPANCY: The enroms for the Kansas City RVR system are an enaineerina release not properly tested, resulting in COmmunication errors.

SUGGESTED ACTION: Have Teledyne Qyalificatjon test and release the eproms,

IMPROVEMENT RECOMMENDATION:

TEAM LEADER:

TEST MANAGER:

RVR DISCREPANCY/IMPROVEMENT FORM

SITE: Kansas City, Missour; (MCI)

TEST CATEGORY: d (1) DATE/TIME: 12/08/92 10:00 AM

TEST AREA: Documentation availability and Adequacy

TEST PROCEDURE STEP: 4.0 (b) (9)

DISCREPANCY: In the On-Site Technical Instruct;on book, Figure 9-15 does not show a 9 pin configuration for connector pZ.

SUGGESTED ACTION: Add to Figure 9-15 a 9 Din configuration for connector P2.

IMPROVEMENT RECOMMENDATION:

TEAM LEADER:

TEST MANAGER:

RVR DISCREPANCY/IMPROVEMENT FORM

SUGGESTED ACTION: Correct system so snow wjll not take the system off-line.

IMPROVEMENT RECOMMENDATION:

TEAM LEADER: _.

TEST MANAGER:

RVR DISCREPANCY/IMPROVEMENT FORM

SITE: Kansas City, Missouri (MCl)

TEST CATEGORY: i (1) and o DATE/TIME: 12110/92 11:00 AM

TEST AREA: VS SIE Software

TEST PROCEDURE STEP: 15.0 (a) and 8.0 (a)

DISCREPANCY: At a VS SIE. if MDT lon-on occurs 30 seconds before the calibration yerificatjon completjon, extra spaces occur in the output, Also. the backspace does not function correctly. Example: [D[D

SUGGESTED ACTION: Correct the software at theVS SIE so that the MDT loo-on can occur without errors.

IMPROVEMENT RECOMMENDATION:

TEAM LEADER: _"

TEST MANAGER:

RVR DISCREPANCY/IMPROVEMENT FORM

SITE: Kansas City, Missouri (MCT)

TEST CATEGORY: (1) and (2) DATE/TIME: 12/08/92 9:00 AM

TEST AREA: VS and ALS SIE

TEST PROCEDURE STEP: 8.0 (a)...and 8.0 (b)

DISCREPANCY: The ALS and VS lost calibration twice for no apparent reason.

SUGGESTED ACTION: Determine why the ALS and VS' are losing caljbratjon and correct the problem.

IMPROVEMENT RECOMMENDATION:

TEAM LEADER:

TEST MANAGER:

RVR DISCREPANCY/IMPROVEMENT FORM

SITE: Kansas City, Missouri (MCI)

TEST CATEGORY: 0 DATE/TIME: 12/08/92 3:00 PM

TEST AREA: Software

TEST PROCEDURE STEP: 15.0 (a)

DISCREPANCY: The fault diagnostics tests do not appear to be operating correctly. See attachments.

IMPROVEMENT RECOMMENDATION:

TEAM LEADER:

TEST MANAGER:

RVR DISCREPANCY/IMPROVEMENT FORM

SITE: Kansas City, Missouri {MCl}

TEST CATEGORY: j (}) and j (2) DATE/TIME: 12/10/92 9:00 AM

TEST AREA: VS and ALS SIE

TEST PROCEDURE STEP: 8.0 (a) and 8.0 (b)

DISCREPANCY: The de-ice heater does not turn on at 10 degrees C ambient apparently because the dew heater keeps the de-ice heater sensor warm,

SUGGESTED ACTION: Correct de-ice heater so that it will turn on when the outside ambient temperature is 10 degrees C.

IMPROVEMENT RECOMMENDATION:

TEAM LEADER:

TEST MANAGER:

RVR DISCREPANCY/IMPROVEMENT FORM Form #93

SITE: Kansas City, Missouri (MCI)

TEST CATEGORY: c DATE/TIME: 12/01/92 9:00 AM

TEST AREA: Safety

TEST PROCEDURE STEP: 3.0 (b)

DISCREPANCY: Rain took the mid-point VS sensor off-line via window contamination for tWQ hours during OT&E testjng Noyember II, 1992 Additionally rain took the RVR system off-line October 21, 1992 and December 14, 1992. Rain took three VS sensors off-line via window contamination durjng OT&E testing June 17 and 18, 1993.

SUGGESTED ACTION: Correct RVR system so that blowing rain wjll not take the system off-line.

IMPROVEMENT RECOMMENDATION:

TEAM LEADER: H.S RWS

TEST MANAGER:

RVR DISCREPANCY/IMPROVEMENT FORM

SITE: Kansas City, Missouri (MCn

TEST CATEGORY: 0 DATE/TIME: 12/10/92 12:00 PM

TEST AREA: Software

TEST PROCEDURE STEP: 15.0 (a)

DISCREPANCY: The shakedown test team saw an unusually high number of communication errors which took the MST off-line at the OpU, possibly a result of untested firmware.

SUGGESTED ACTION: Correct software to alleviate commynjcatjon errors,

IMPROVEMENT RECOMMENDATION:

TEAM LEADER:.

TEST MANAGER:

RVR DISCREPANCY/IMPROVEMENT FORM

SITE: Kansas City, Missouri (MCl)

TEST CATEGORY: d (1) DATE/TIME: 12/09/92 4:00 PM

TEST AREA: Documentation ayailability and Adequacy

TEST PROCEDURE STEP: 4.0 (b)

DISCREPANCY: The VS SIE MDT Fault Data screen in the On-Site tehnical instruction book should be tjtled Fault Data jnstead of Fault Detection.

SUGGESTED ACTION: Correct the title for the YS SIE MDT Fault Data screen in the technical instruction book.

IMPROVEMENT RECOMMENDATION:

TEAM LEADER:

TEST MANAGER:

RVR DISCREPANCY/IMPROVEMENT FORM

SITE: Kansas City, Missouri (MCl)

TEST CATEGORY: i (1) DATE/TIME: 12/09/92 10:00 AM

TEST AREA: VS SIE

TEST PROCEDURE STEP: 8.0 (b)

DISCREPANCY: During calibration, the calibration plate affected the window contamination.

SUGGESTED ACTION: Correct the calibratjon procedure so that the caljbration plate does not affect the window contamination.

IMPROVEMENT RECOMMENDATION:

TEAM LEADER:

TEST MANAGER:

RVR DISCREPANCY/IMPROVEMENT FORM

SITE: Kansas City, Missouri (MCl)

TEST CATEGORY: i (4) DATE/TIME: 12/09/92 3:00 PM

TEST AREA: SIE Cabjnets

TEST PROCEDURE STEP: 8.0 (a), 8.0 (b), and 8.0 (e)

DISCREPANCY: The piano hinge pin on each of the SIr cabinets is rusting.

IMPROVEMENT RECOMMENDATION:

TEAM LEADER:

TEST MANAGER:

RVR DISCREPANCY/IMPROVEMENT FORM

SITE: Kansas City, Missouri (MCT)

TEST CATEGORY: j (4) DATE/TIME: 12/10/92 2:00 PM

TEST AREA: OPU and SIE Cabjnets

TEST PROCEDURE STEP: 8.0 (a), 8.0 (b), and 8.0 (c)

DISCREPANCY: The cable pin-out on the OPU and SIE cabinets is not a standard RS-232 cable connect jon.

SUGGESTED ACTION: Rewire the OPU and SIE cabinets so that a standard RS-232 cable can be used.

IMPROVEMENT RECOMMENDATION:

TEAM LEADER:

TEST MANAGER:

RVR DISCREPANCY/IMPROVEMENT FORM Form #99

SITE: Kansas City. Missouri (MCT)

TEST CATEGORY: j (5) and o DATE/TIME: 12/10/92 2:00 PM

TEST AREA: CO and Software

TEST PROCEDURE STEP: 8.0 (e) and 15.0 (a)

DISCREPANCY: All sensors can be over-ridden manually, with no indication at the controller display of possible invalid data.

SUGGESTED ACTION: Rewrite software for the CD display so that when a ys is manually set the RVR product associated with it will flash and when the ALS is manually set all RVR products will flash.

IMPROVEMENT RECOMMENDATION:

TEAM LEADER: HS RWS

TEST MANAGER:

RVR DISCREPANCY/IMPROVEMENT FORM

SUGGESTED ACTION: Rewrite software for the JQopback tests ruo on ooo-existant external users so that it states "not monitored".

IMPROVEMENT RECOMMENDATION:

TEAM LEADER:.

TEST MANAGER:

RVR DISCREPANCY/IMPROVEMENT FORM Form #101

SITE: Kansas City, Missouri (MCl)

TEST CATEGORY: _____ DATE/TIME: 06/17/92 2:00 PM

TEST AREA: OPU

TEST PROCEDURE STEP: 8.0 (f)

DISCREPANCY: The PPU-B health LED cycled on and off. When a PPUB fault diagnostics test was run it found no faylts, but continued to cycle.

SUGGESTED ACTION: Investigate problem and correct.

IMPROVEMENT RECOMMENDATION:

TEAM LEADER:

TEST MANAGER:

RVR DISCREPANCY/IMPROVEMENT FORM Form #103

SITE: Kansas City, Missouri (MCll

TEST CATEGORY: d DATE/TIME: 06/19/92 8:00 AM

TEST AREA: FAA Facility Standard Drawings

TEST PROCEDURE STEP: 4.0

DISCREPANCY: The FAA Facility Standard Drawings are not in final form.

SUGGESTED ACTION: Finalize drawings and provide a set to AOS and all the regions for review.

IMPROVEMENT RECOMMENDATION:

TEAM lEADER:

TEST MANAGER:

RVR DISCREPANCY/IMPROVEMENT FORM Form #104

SITE: Kansas City, Missouri (MCI)

TEST CATEGORY: d DATE/TIME: 03/18/92 8:00 AM

TEST AREA: Controllers Users Manual

TEST PROCEDURE STEP: 4.0

DISCREPANCY: The controllers users manual is not complete. It does not address failures on the R! 1M.

SUGGESTED ACTION: Incorporate jnformation on failyres dye to the RIIM in the Controllers Users Manual.

IMPROVEMENT RECOMMENDATION:

TEAM LEADER:

TEST MANAGER:

RVR DISCREPANCY/IMPROVEMENT FORM Form #104

SITE: Kansas City, Missouri (MCIl

TEST CATEGORY: d DATE/TIME: 03/18/92 8:00 AM

TEST AREA: Controllers Users Manual

TEST PROCEDURE STEP: 4.0

DISCREPANCY: The controllers users manual is not complete, It does not address fajlyres on the RLIM.

SUGGESTED ACTION: Incorporate jnformatjoD on failures due to the BlIM in the Controllers Users Manual.

IMPROVEMENT RECOMMENDATION:

TEAM LEADER: ..

TEST MANAGER:

RVR DISCREPANCY/IMPROVEMENT FORM

105

SITE: Kansas City, Missouri (MCI)

TEST CATEGORY: j

DATE/TIME: 08/16/93 1:30PM

TEST AREA: VS SIE

TEST PROCEDURES STEP: 8.0 b

DISCREPANCY: VS calibration plate did not fit properly on the fork of VS #3.

SUGGESTED ACTION: Tighter tolerances on quality control.

IMPROVEMENT RECOMMENDATION:

TEAM LEADER: Holly Sanayi

TEST MANAGER:

RVR DISCREPANCY/IMPROVEMENT FORM 106

SITE: Kansas City, Missouri (MCIl

TEST CATEGORY: d DATE/TIME: 08/18/93 9:30 AM

TEST AREA: TI Book 6560.17

TEST PROCEDURES STEP: 4.0 b(9)

DISCREPANCY: On Figure 9-41, page 9-69 the ALS window contamination gain value for WC LRI does not agree with the default setting in the software.

SUGGESTED ACTION: Correct software or book.

IMPROVEMENT RECOMMENDATION:

TEAM LEADER: Holly Sanayi

TEST MANAGER:

RVR DISCREPANCY/IMPROVEMENT FORM 107

SITE: Kansas City, Missouri (MC1)

TEST CATEGORY: d DATE/TIME: 08/17/93 1l:30AM

TEST AREA: Tl Book 6560.17

TEST PROCEDURES STEP: 4.0 b(9)

DISCREPANCY: On Figure 9-40, page 9-68 for the VS window contamination gain values RWC GR1, RWC LRl, RWC LR2, and RWC LR3 do not agree with the default settings in the software.

SUGGESTED ACTION: Correct software or book.

IMPROVEMENT RECOMMENDATION:

TEAM LEADER: Holly Sanayi

TEST MANAGER:

APPENDIX K
REFERENCED REPORTS

NOTICE

US. Department of Transportation
Federal Aviation Administration

N 6560.16

11/4/94

Cancellation
Date: 11/4/95

SUBJ: INTERIM CERTIFICATION AND MAINTENANCE OF THE RUNWAY VISUAL RANGE (RVR) SYSTEM. TYPE FA-1026B

1. PURPOSE. This notice provides guidance and requirements for interim certification and maintenance of the runway visual range (RVR) system, type FA-1026B. It will ensure that the system *is* providing its intended service to the user until the maintenance handbook for the system *is* distributed. These procedures will be superseded by the maintenance handbook and canceled upon its distribution or the cancellation date of this notice, whichever occurs first.

2. DISTRIBUTION. This notice is distributed to selected offices and services within Washington headquarters, regional Airway Facilities divisions, the FAA Technical Center, the Mike Monroney Aeronautical Center, and Airway Facilities field offices having the following facilities/equipment: RVR, Type FA-1026B.

3. CANCELLATION. This notice cancels Notice N 6560.13, Certification and Maintenance of FA-1026B Runway Visual Range (RVR) System for Denver International Airport, dated 3/4/94.

4. ACTION. The procedures of paragraph 6 below shall be used by the assigned maintenance technicians to certify and maintain the RVR system, type FA-1026B, until permanent procedures are established by the maintenance handbook.

5. BACKGROUND.

a. Order 6560.XX, Maintenance of Runway Visual Range (RVR) Equipment, Type FA-1026B, is in the review and approval process but is not expected to be distributed until the third quarter FY-95. Interim maintenance procedures, schedules, and standards have been developed from the instruction book, Runway Visual Range System On-Site Requirements, TI 6560.17, and from experience gained during and following the shakedown tests.

b. While testing the RVR system the following two occurrences have been observed.

(1) During rain showers in the daytime when visibility was good, the equipment sometimes went off-line. Even though the windows were clean. diagnostic tests indicated high window contamination reSUlting in a hard alarm. This same result was reproQuced on a clear day by spraying water in the visibility sensor's air sample volume and not on the windows. It is conceivable that sunlight causes infrared scattering from raindrops, resulting in the false indication. It has not occurred during showers or thunderstorms at night.

Distribution: Selected Airway Facilities Field and Regional Offices, ZAF-604

Initiated By: AOS-240

(2) Occasionally during routine operation, the RVR loses communication with the remote maintenance system (RHS). This does not interrupt communications with the CD nor degrade information provided to the air traffic controller. It only interrupts data flow to the RMS. Normal operation can be restored by issuing commands from the RMS. A temporary factory modification has been installed that should eliminate this problem.

(3) If either of these occurrences, or any other unusual phenomena relating to the RVR type FA-10268 is observed in the field, you are requested to report it, along with any relevant information, to AOS-240, phone number (405) 954-3644.

6. INTERIM MAINTENANCE PROCEDURES, SCHEDULES, STANDARDS, LIMITS.

NOTE: All paragraph and figure references are to TI 6560.17 unless otherwise indicated.

Limits and parameters (paragraphs 6a and 6b) shall be set during installation and checkout, and as needed thereafter.

a. Limits. Verify that all window contamination hard and soft alarm limits for all visibility sensors (VS) and the ambierit light sensor (ALS) are as described in TI 6560.17,and specified below. ,Make adjustments, if necessary, as follows. This operation requires a security level of 3.

(1) Log on the maintenance data terminal (MDT) at the data processing unit (DPU), and from the main menu (figure 6-3), select <0> to display the control screen (figure 6-4), then press <CR> twice to raise the security level to 3.

(2) Press <ESC> to return to the main menu.

(3) Select <P> to display the maintenance parameter menu (figure 6-16), then <L> for the parameter limits screen (figure 6-17).

(a) Use <TAB> to position the cursor under the Hard Alarm High, TX WIND CONTAM data 'field for VS system interface electronics (SIE) 01.

(b) Press <CR> to edit the field.

(c) Press <BACKSPACE> three times, then type in 040 to give this data field a value of 040.

(d) Press <TAB> to accept the data and to move the cursor to the Soft Alarm High; TX WIND CONTAM data field for VS SIE 01.

(e) Press <CR> to edit the field.

(f) Press <BACKSPACE> three times, then type in 025 to give this data field a value of 025.

(g) Press <TAB> to accept the data and to move the cursor to the Hard Alarm High, RX WIND CONTAM data field for VS SIE 01.

(h) Repeat the procedure in steps (a) through (g) to set the RX WIND CONTAM alarm limits for VS SIE 01.

(i) Repeat the procedure in steps (a) through (h) to set the window contamination alarm limits for all configured VS SIE's.

(j) Use <TAB> to position the cursor under the Hard Alarm High, WIND CONTAM data field for the ALS SIE.

(k) Press <CR> to edit this field.

(1) Press <BACKSPACE> three times, then type in 060 to give this data field a value of 060.

em) Press <TAB> to accept the data and to move the cursor to the Soft Alarm High, WIND CONTAM data field for the ALS SIE.

(n) Press <CR> to edit this field.

Co) Press <BACKSPACE> three times, then type 030 to give this data field a value of 030.

(p) Use <TAB> to position the cursor under * Execute Configuration Change, press <CR>, then <Y>.

(q) Press <ESC> twice to return to the main menu, then press <L> to log out.

b. Parameters. Verify that the SIE parameters are as specified in TI 6560.17.

(1) From the main menu select <C> to display the configuration menu {figure 6-B}, then select P for the SIE parameters screen (figure 6-31) .

(2) Verify that the parameters are as specified in figure 6-31.

(3) Edit the parameters, if necessary, using the general procedure given in paragraph 6a of this notice.

c. Performance Checks. Perform the following checks to ensure that the system is operating within the established tolerances/limits and make appropriate entries in the station log.

(1) Weekly. Verify that all monitored parameters are normal.

(a) Log on the MDT at the DPU, and from the main menu select <P> for parameters (figure 6-16), then <v> for values (figure 6-47).

(b) Verify the conditions listed below on each of the following units: maintenance processing unit (MPU), active product processing unit (PPU), standby PPU, and all configured SIE's.

1 Availability ---------- Online-Auto (hot-standby for the standby PPU)

2 Faulty LRU (Most Likely) ---None

3 All other parameters -------Normal (or not monitored)

4 Status Column ----------No LRU's listed

(c) If any warnings or alarms are observed, take action as necessary to clear them.

(d) Select <ESC> twice to return to the main menu, and then press <L> to logout.

(2) Quarterly.

(a) Verify that the system time is within +7 seconds of the coordinated universal time (UTC).

1 Log on the MDT at the DPU, and from the main menu select <S> for status screen (figure 6-30).

2 Observe the update rate multiplier number. If the number is zero (Update Rate: 0(*.10 sec», skip to step 7. If the update rate multiplier is not zero, proceed with step 3.

3 Use <TAB> to position the cursor under the update rate multiplier number.

4 Press <CR> to edit this field.

5 Press <BACKSPACE> once, then press <0> (zero).

6 Press <TAB> to accept the data.

7 With Update Rate: 0(*10 sec) the TIME:hh:rnrn:ss will be updated every 2 seconds, approximately. Compare the system time with the UTC.

8 If the system time is within ±7 seconds of the UTC, select <ESC> to return to the main menu, then press <L> to logout.

9 If the system time is not within +7 seconds of UTC, proceed with paragraph (b) to set the time.

(b) Set the system time. This procedure requires a security level of 3. It is designed to correct minor variations in time, i.e., minutes and seconds. If the year, date, or hour must be corrected, refer to paragraph 6.4.4.

1 Log on the MDT at the DPU, and from the main menu select <0> for control screen (figure 6-4), then press <CR> twice to raise the security level to 3.

2 Select <ESC> to return to the main menu.

3 Select <C> for Configuration Menu (figure 6-8), then <D> for the date/time screen (figure 6-9).

4 Use <TAB> to position the cursor under the minutes field of TIME.

5 Press <CR> to edit this field.

6 Press <BACKSPACE> twice, then type in a number that *is* 2 minutes ahead of the present UTC.

7 Press <TAB> to accept. this data and to move the cursor to the seconds field.

8 Press <CR> to edit this field.

9 Press <BACKSPACE> twice, then type in zero, zero (00) .

10 Press <TAB> to accept this data and to move the cursor to * Execute Time Change.

11 Press <CR>, then wait until 2 seconds before the UTC time selected in step 6 above, then press <y> to confirm.

12 Verify the time per subparagraph 6c(2) (a) above.

13 Press <ESC> once to return to main menu, then press <L> to logout.

(c) .Check the SIE battery condition and performance.

NOTE: This procedure should be performed only after the SIE has been operating normally on ac power, uninterrupted, for at least 12 hours. It has been noted during moderate temperatures that when a battery-is becoming weak, the top of the battery housing feels warmer than the top of the EMI housing beside.it. This can be a quick check, made during other maintenance work, that might detect a weakening battery and indicate that additional checks should be made.

1 With the ac power switch and battery switch both on (normal operating-position), verify that the EMI housing ac power lamp is illuminated. Verify that the controller CCA (2A2) health LED is illuminated. Verify that the power supply (2A3PS1) health LED is illuminated. For VS SIE or ALS SIE, verify that the personality module (2A5) sensor heater voltage health LED is illuminated.

2 Turn the SIE ac power switch off. Verify that the controller CCA health LED remains illuminated. Verify.that the power supply health LED remains illuminated. If the power supply health LED stays on, verify the controller health LED does not go off momentarily or permanently.

3 Turn the SIE battery switch off.

WARNING: Shorting the battery housing subassembly 2A4TBl-3 (battery +) to 2A4TBl-4 (battery -) or SIE chassis may cause the bat-. tery to explode or leak.

4 Set the voltmeter to dc voltage and the appropriate range or to autorange.

5 Connect the positive polarity. lead of the voltmeter to battery housing subassembly 2A4TBl-3. Connect the negative polarity lead of the voltmeter to 2A4TBl-4. Verify battery voltage is greater than or equal to 26.0 V de. If the battery voltage is less than 26.0 V de, perform corrective maintenance in accordance with paragraph 7.5.1 part g.

6 With theac power switch still off, turn the battery switch on.

7 Connect the MDT and perform diagnostics in accordance with section 7.6.4. Verify that the AC POWER parameter is FAIL (power supply is running on battery) and that the BATTERY CONDITION parameter is OK (battery charge is not low). Otherwise perform corrective maintenance in accordance with paragraph 7.5.1 part g.

8 Return the SIE to normal operation.

d. Maintenance Tasks.

(1) Quarterly. Apply a new coat of spider paint to the ALS and all VS hoods. {Refer to paragraphs 9.5.1a, i, j, and 9.5.2g and relevant warnings.).

e. Certification. Certify the system monthly by performing the following checks and procedures.

(1) Clean the ALS window and then verify the ALS calibration per paragraph 6.10.1.1.

(2) Clean the VS windows and then verify the calibration of each visibility sensor per paragraph 6.10.2.1.

(3) Verify that all DPU front panel health LED's are illuminated. Verify that the active LED is illuminated for the PPU (A or B) that *is* selected by the PPU select switch.

(4) Log on the MDT at the DPU, and from the main menu select <s> for status screen (figure 6-30).

(5) verify that the status of each of the following units is as indicated.

(a) MPU---------- Online-auto

(b) Selected PPU ---------- Online-auto

(c) Standby PPU---------- Hot-standby

(d) All configured SIE's ---- Online-auto

(6) Change the PPU select switch to the other position, and repeat steps (3) and (5).

(7) Select <ESC> to return to the main menu.

(8) Verify correct operation of the runway light intensity monitor (RLIM).

(a) Select <D> for data menu (figure 6-19), then <S> for sensor data menu (figure 6-21), then <A> for sensor data for all sensors screen (figure 6-26).

(b) verify that the RLIM indicates the correct runway light intensity on all steps.

(9) Perform the weekly performance checks in subparagraph 6c(1) of this notice.

(10) Make an appropriate certification entry in the Facility Maintenance Log, FAA Form 6030-1 or 6030-2.

Donald D. Mason
for George D. Williams
Acting Director, Operational Support

DOTIFAAI
DOT-VNiSC-FAA-92-12

Navigation and Landing
Programs Office
Washington, DC 20591

Evaluation of the Teledyne Forward-Scatter Visibility Sensor for Measuring Runway Visual Range:

Volume 1: Summary

Edward A. Spitzer
Charles O. Phillips
David C. Burnham

Research and
Special Programs
Administration
John A. Volpe National
Transportation Systems center
Cambridge, MA 02142-1093

September 1992

This document is available to the public
through the National Technical Information
Service. Springfield. VA 22161

U.S. Department
of Transportation

Federal Aviation
Administration

NOTICE

This document is disseminated under the sponsorship of the Department of Transportation in the interest of information exchange. The United States Government assumes no liability for its contents or use thereof.

NOTICE

The United States Government does not endorse products or manufacturers. Trade or manufacturers' names appear herein solely because they are considered essential to the object of this report.

REPORT DOCUMENTAIIUN PAGE

ru"" Approved
OMS No.

Public reporting burden for this collection of is estilllBted to 1 hour per response, including the time for reviewing instructions[searching existing data sources, gathering and the data needed, and completing and the co lection of Send comments regarding this estilllBte or any other of this collection of including suggestions for reducing thIS burden, to Washington Headquarters Services, Directorate for information Operations and Reports, 1215 Jefferson Davis Highway, Suite 1204 Arlington, VA 22202-4302 nard to the Office of Management and Budget. Paper eduction Project (0704-0188) DC 20503

1. AGENCY USE ONLY CLeave blank)	2. REPORT DATE	3. REPORT TYPE AND DATES COVERED Final Report Nov. 1988 • July

4. TITLE AND SUBTITLE
Evaluation of the Teledyne Forward-Scatter Visibility Sensor for Measuring Runway Visual Range: Volume I: Summary

5. FUNDING NUMBERS
FA295/A2058

6. AUTHORCS)
Edward Spitzer, Charles O. Phillips, David C. Burnham

7. PERFORMING ORGANIZATION NAMECS) AND ADDRESS(ES)
U.S. Department of Transportation
Research and Special Programs Administration
John A. Volpe National Transportation Systems Center
Cambridge, MA 02142

8. PERFORMING ORGANIZATION REPORT NUMBER
DOT-VNTSC-FAA-92-l2

9. SPONSORING/MONITORING AGENCY NAMECS) AND ADDRESS(ES)
U.S. Department of Transportation
Federal Aviation Administration
Navigation and Landing Programs Office
Washington, DC 20591

10. SPONSORING/MONITORING AGENCY REPORT NUMBER
DOT/FAA/

11. SUPPLEMENTARY NOTES

12a. DISTRIBUTION/AVAILABILITY STATEMENT
This document is available to the public through the National Technical Information Service, Springfield, VA 22161

12b. DISTRIBUTION CODE

13. ABSTRACT (Maximum 200 words)

The Federal Aviation Administration CFAA) awarded the contract for the new generation Runway Visual Range CRVR) system to Teledyne Controls. The performance of the Teledyne visibility sensor was evaluated at four airport test sites. At two sites (Seattle-Tacoma and Bangor ME) an operational configuration was deployed. Comparisons with the existing RVR systems at these sites indicated a calibration discrepancy. Consequently, a more controlled test was conducted at the Otis Weather Test Facility on Cape Cod MA. These tests established an accurate sensor calibration and demonstrated that the sensor meet the FAA RVR accuracy and calibration consistency specifications.

Visibi lity sensors may exhibit degraded performance of window clogging under blowing snow conditions. Two teledyne sensors were tested at the Canadian severe weather test site in St. Johns, Newfoundland. Their performance was observed to be similar to most other operational visibility Cincluding existing FAA transmissometers); namely clogging under some severe conditions.

In the course of the tests a number of other sensor anomalies were discovered, such as 1) large window signals from rain or melted snow droplets and 2) cally low extinction coefficient measurements in snow when the sensor is calibrated for fog. modified their processing software to handle all observed anomalies. Possible sensor configuration modifications were identified that may eliminate most if not all anomalies.

14. SUBJECT TERMS
RVR, Extinction Coefficient, Scattering Angle, Forward-scatter, Transmissometer, Calibration

15. NUMBER OF PAGES
48

16. PRICE CODE

17. SECURITY CLASSIFICATION OF REPORT	18. SECURITY CLASSIFICATION OF THIS PAGE	19. SECURITY CLASSIFICATION OF ABSTRACT	20. LIMITATION OF ABST'
Unclassified	Unclassified	Unclassified	

NSN 7540-01-280-5500

Standard Form 298 2-89)
Prescribed by ANSI Std. 239-18
298-102

PREFACE

The John A. Volpe National Transportation Systems Center participated in the testing and development that led to the specification of forward-scatter visibility sensors in the Runway Visual Range (RVR) specification, which was used by the Federal Aviation Administration (FAA) to procure the new generation RVR system. the work the Volpe Center has performed a) to verify that the visibility sensor of this system meets the specifications and b) to assess the perfonnance of the system.

Much of the work reported here was carried out at the Otis Weather Test Facility operated by the Geophysics Directorate of the Air Force Phillips Laboratory. WTF personnel Ralph Hoar and Clyde Lawrance made significant contributions to the work.

Ed Bauyer wrote the airport site data collection software. Jim Littlefield designed the Tasker interface for the airport tests and helped debug the airport data collection systems. The assistance of the FAA Airways Facilities Sector personnel at Sea-Tac and Bangor is acknowledged.

Access to the Canadian Atmospheric Environment Service test site at St Johns, Newfoundland was by Roger Van Cauwenberghe, who, along with Earle Chapman, also helped with the installation and data acquisition.

Leo Jacobs helped install and maintain the test equipment at all test sites. David Hazen helped analyze the data from all test sites. Mike West has helped resolve the issues presented in this report.

K-]]

METRICI ENGLISH CONVERSION FACTORS

ENGLISH TO METRIC

LENGTH (APPROXIMATE)

1 inch (in) = 2.5 centimeters (em)
1 foot (ft) = 30 centimeters (em)
1 yard (yd) = 0.9 meter (m)
1 mile (mi) = 1.6 kilometers (lem)

AREA (APPROXIMATE)

1 square inch in. in²) = 6.5 square centimeters (em:)
1 square foot (sq ft, ft²) = 0.09 square meter (m²)
1 square yard (sq yd. yd²) = 0.8 square meter (m²)
1 square mile (sq mi. mi²) = 2.6 square kilometers (km²)
1 acre = 0.4 hectares (he) = 4,000 square meters (m²)

MASS - WEIGHT (APPROXIMATE)

1 ounce (oz) = 28 grams (gr)
1 pound (Ib) = .45 kilogram (kg)
1 short ton = 2.000 pounds (Ib) = 0.9 tonne (t)

VOLUME (APPROXIMATE)

1 (Up) = 5 milliliters (ml)
1 tablespoon (tbsp) = 15 milliliters (mf)
1 fluid ounce (n oz) = 30 milliliters (ml)
1 cup (c) = liter (I)
, pint (pt) = (I)
1 quart (qt) = 0.96 liter (I)
1 gallon (gal) = 3.8 liters (I)
1 cubic foot (eu ft, ft³) = 0.03 cubic meter (m³)
1 cubic ya (cu yd. yd³) = 0.76 cubic meter (m³)

TEMPERATURE (EXACT)

Hx· 32}(5lS)]'F = y °C

METRIC TO ENGUSH

LENGTH (APPROXIMATE)

1 millimeter (mm) = 0.04 inch (in)
1 centimeter (em) = ·0.4 (in)
1 meter (m) = 3.3 feet (ft)
1 meter(m) = 1.1 yards (yd)
1 kilometer(km) = 0.6 mile

AREA (APPROXIMATE)

1 square centimeter (cm²) = 0.16 square inch (sq in,
1 square meter (m²) = 1.2 square (sq yd. yd²)
1 square kilometer (km²) = 0.4 square mile mi. mi²)
1 hectare (he) = 10,000 square meters (m²) = 2.5 acres

MASS· WEIGHT (APPROXIMATE)

1 gram (gr) = 0.036 ounce (oz)
1 kilogram = 2.2 pounds (Ib)
1 tonne (t) = 1,000 (kg) = 1,1 short tons

VOLUME (APPROXIMATE)

1 milliliter (ml) = 0.03 fluid ounce (fl oz)
1 liter (I) = 2.1 pints (pt)
1 liter (I) = 1.06 qua (c;t)
1 liter (I) = 0.26 gallon (gal)
1 cubic meter (m') = 3e cubic feet (cu ft, ft³)
1 cubic meter (m³) = 1.3 cubic (cu yd, yd³)

TEMPERATURE (EXACT)

[(9/5) y + 32]'C = x'F

QUICK INCH·CENTIMETER LENGTH CONVERSION

INCHES	0	1	2	3	4	5	6	7	8	9	10
CENTIMETERS	0	2	3· 4	5 6	7 8	9 10	11 12	13 14	15 16	17 18	19 20 21 22 23 24 25 25.40

QUICK FAHRENHEIT-CELSIUS TEMPERATURE CONVERSION

"F	-40'	·22'	-4'	14'	32"	50"	68°	BS"	104"	122°	140'	158"	176'	194°	212°
'C	-40'	·30°	·20"	·10'	O'	10'	20'	30°	40°	SO'	60°	70'	80'	90°	100'

For more exact and'or other see NBS Miscellaneous 286. of weights and Measures. Price SO Catalog No. C13 10 2E6.

TABLE OF CONTENTS

1. INTRODUCTION 1
1.1 TRANSMISSOMETER 1
1.2 DEVELOPMENT OF THE FORWARD-SCATIER VISIBILITY SENSOR 1
1.3 U.S. TEST mSTORY 3
1.4 WMO TESTS 3
1.5 U.S. TEST CONCLUSIONS 4
1.5.1 RVR Visibility Range (0-6000 ft) 4
1.5.2 AWOS/ASOS Visibility Range (114 to 10 miles) 4
1.5.3 Consistency 5
1.6 RELIABILITY DEVELOPMENT TESTS 5
1.7 OTIS 6
1.8 ST. 6
1.9 SCOPE OF REPORT . . . . . " 6

2. FIELD TESTS . . . . . " 7
2.1 AIRPORT TESTS 7
2.1.1 Installation 7
2.1.2 Airport RVR Data 7
2.1.3 Airport σ Data 8
2.1.4 Airport Ambient Light Data 8
2.1.5 Sample Airport Runway Light Setting Data 9
2.1.6 Fog Events 10
2.1.7 Data Quality 11
2.1.8 Improved Airport Data . . . 11
2.2 OTIS 11
2.2.1 Otis Visibility Standards 12
2.2.2 Teledyne Units 14
2.2.3 Teledyne Finnware Changes 14
2.3 ST. JOHNS TESTS 15

3. RESULTS 17
3.1 COMPUANCE WITH RVR SPECIFICATION 17
3.1.1 Period 17
3.1.2 Accuracy 17
3.1.3 Cahoration Consistency 18
Calibration Plate Consistency 19
3.1.3.2 Calibration Determination " 19
3.1.3.3 Sensor Geometry Consistency 20
3.1.3.4 Sensor Calibration 22
3.1.4 Calibration Drift 23
3.2 WET WINDOW SIGNALS 25

3.3 SNOW 25
3.3.1 RVR in Snow 26
3.3.2 Snow Response 28
3.3.3 Snow Blockage 29

4. CONCLUSIONS AND RECOMMENDATIONS 31
4.1 CALffiRATION ACCURACY 31
4.1.1 Predeployment Activities 31
4.1.2 Future Activities 31
4.2 CALffiRATION STABILITY 31
4.2.1 Predeployment Activities 31
4.2.2 Future Activities 31
4.3 PRODUCTION CONSISTENCY 32
4.3.1 Predeployment Activities 32
4.3.2 Discussion 32
4.3.3 Future Activities 32
4.4 WINDOW CORRECTION FACTORS 33
4.4.1 Predeployment Activities 33
4.4.2 Future Activities 33
4.5 WET WINDOW SIGNALS 33
4.5.1 Predeployment Activities 33
4.5.2 Future Activities 33
4.6 SNOW BLOCKAGE 33
4.6.1 Predeployment Activities 33
4.6.2 Discussion 34
4.6.3 Future Activities 34
4.7 HIGH RVR IN SNOW 35
4.7.1 Predeployment Activities 35
4.7.2 Discussion 35
4.7.3 Future Activities 35
4.8 RVR ACCURACY SPECIFICATION 35

REFERENCES 37

LIST OF FIGURES

Figure 1. Teledyne Visibility Sensor on Frangible Pole 1
Figure 2. Sea-Tac RVR at Touchdown Location 7
Figure 3. Bangor RVR at Touchdown Location 7
Figure 4. Sea-Tac (f at Touchdown Location 8
Figure 5. Bangor (f at Touchdown Location . . . . . " 8
Figure 6. Sea-Tac Ambient Light 8
Figure 7. Bangor Ambient Light 9
Figure 8. Sea-Tac Runway Light Setting 9
Figure 9. Bangor Runway Light Setting 9
Figure 10. Bangor RVR at Touchdown Location 11
Figure 11. Teledyne RVR Comparison at Otis 22
Figure 12. RVR: Teledyne Unit A versus TAVE 23
Figure 13. RVR: Teledyne Unit E versus TAVE 23
Figure 14. RVR: Teledyne Unit A versus S300 23
Figure 15. RVR: Teledyne Unit E versus S300 24
Figure 16. Distribution of MOR in Snow at Otis 26
Figure 17. RVR vs. MOR: Ambient Light 0.5 Ft-Lmb (Night); Runway Light Settings 5, 4 and 3. . 26
Figure 18. RVR vs. MOR: Ambient Light 200 Ft-Lmb; Runway Light Settings 5, 4, 3 and 0 26
Figure 19. RVR vs. MOR: Ambient Light 1000 Ft-Lmb; Runway Light Settings 5, 4, **3 and 0** **27**
Figure 20. RVR vs. MOR: Ambient Light 2000 Ft-Lmb; Runway Light Settings 5, 4, 3 and 0 27

LIST OF TABLES

Table 1. Scatter Plot Slopes for Sea-Tac Fog Events 10
Table 2. Scatter Plot Slopes for Bangor Fog Events 10
Table 3. Otis External User Port Format 12
Table 4. OTIS REFERENCE 12
Table 5. Teledyne Units Tested at Otis 14
Table 6. RVR Accuracy Requirements 17
Table 7. RVR Accuracy Results. 17
Table 8. Low σ Range Accuracy by Class 18
Table 9. Transmissometer Homogeneity Test Results (Unit A) 18
Table 10. Calibrator Intercomparison 19
Table 11. MOR Limits (feet) for Sensor Calibration 20
Table 12. Number of Fog Data Points: Unit A 20
Table 13. Teledyne Intercomparison in Fog 21
Table 14. Fog Calibration 21
Table 15. Airport Sensor Measurement of Calibrator *SIN* 0004 24
Table 16. Ambient Light Level in Heavy Snow 27
Table 17. Unit A Snow Data Points 28
Table 18. Intercomparison in Snow 28
Table 19. Snow Calibrations 29
Table 20. Teledyne Snow Clogging Events: Sensors Affected 30

EXECUTIVE SUMMARY

INTRODUCTION

The Federal Aviation Administration (FAA) awarded a contract to Teledyne Controls for the development and production of the new generation Runway Visual Range (RVR) system. The visibility sensors used in the Teledyne system are Forward-Scatter Meter (FSM) type sensors manufactured by Handar, Inc. The Volpe Center of the Research and Special Programs Administration (RSPA) was tasked by the FAA to evaluate the performance of the Teledyne FSMs. This report contains the results of this evaluation.

World Meteorological Organization (WMO) TESTS

The report on the WMO visibility sensor test, conducted in the United Kingdom, 1) identified calibration inconsistency of forward-scatter sensors as a significant limitation at low visibility and 2) suggested investigations of the influence of particle size distributions on the relationship between the extinction coefficient and the scattered signal. In light of the WMO report, the FAA Flight Standards Service requested that the performance of the forward-scatter sensor used in the Teledyne RVR system be validated before the system becomes operational.

U.S. EXPERIENCE

U.S. studies and tests of FSM sensors have also noted discrepancies in their calibration and have identified the source for such inconsistencies, namely inadequate production quality control over the scattering geometry (alignment of optics, size of beams, calibrator placement, etc.). The problem arises from the use of secondary calibration standards to transfer the primary calibration (based on a transmissometer) from one FSM instrument to another. The FAA RVR specification addresses this problem by requiring that the instrument fog calibration be correct within seven percent when compared to the standard.

In conjunction with the AWOS and ASOS programs, the U.S. has also investigated the effects of particle size on FSM performance. The primary effect is the difference between haze (small particles) and fog (large particles). Significant particle-size effects are rarely noted in the RVR visibility range (below one mile). Of all the common obstructions to vision, only fog and snow reduce the visibility into this range and are therefore the only two weather phenomena of concern for the current study.

AIRPORT TESTS

The FAA deployed 15 Teledyne RVR production systems at airports for reliability evaluation. At two of these sites, Sea-Tac WA and Bangor ME, the RSPA Volpe Center installed data collection systems to record comparative data from the old (Tasker 500 transmissometers) and new (Teledyne forward-scatter sensors) RVR visibility sensors. Enough fog events were recorded at Bangor to show that the three Bangor sensors disagreed

by about 20 percent with the Tasker transmissometers. The Sea-Tac data from fewer fog events indicated an even greater disagreement. Since the calibration discrepancy was well outside the seven-percent calibration requirement, a special test at the Otis Weather Test Facility was set up to determine the correct fog calibration.

OTIS TESTS

On 9/24/91 Teledyne personnel installed a production RVR system at the Otis Weather Test Facility on Cape Cod, MA. The original Otis finnware gave inconsistent fog calibrations. Teledyne identified some possible sources for the observed inconsistency and provided revised firmware which was installed on 12/12/92. The subsequent calibration results were consistent; data from the period 12/13/92 through 3/6/92 were used to derive precise calibrations for the three Teledyne visibility sensor units at Otis. These calibrations were verified using data from 3/13/92 through 6/1192. Two of the Otis sensor heads were then interchanged with two of the Bangor heads. A sufficient number of fog episodes have been experienced at Otis to obtain valid calibrations at Otis of the two units from Bangor.

ST JOHNS TESTS

On 2/12/92 a Teledyne RVR system with two visibility sensors was installed at the severe weather test site operated by the Canadian Atmospheric Environmental Service at the St Johns, Newfoundland airport. Earlier testing at St Johns of the Handar commercial visibility sensor, which uses the same sensing head as the Teledyne sensor, had indicated significant head clogging under blowing snow conditions. The St Johns tests indicated that severe snow conditions can also lead to problems with the Teledyne sensors.

FINDINGS

I) The three original Otis Teledyne sensors meet the accuracy requirements of the RVR specification.

2) Five Teledyne sensors have been accurately calibrated in fog at Otis. The calibrations showed a maximum deviation between sensors of about $\pm$ six percent, which is just within the RVR specification ($\pm$ seven percent). The midpoint calibration of the five sensors will be used to calibrate the secondary calibration plates which will transfer the Otis calibration to the field sensors.

3) The Teledyne sensors measure window contamination by means of window backscatter signals. These signals are then used to correct the extinction coefficient measurements for window losses. The window contamination correction factor can be defined for each installation; the value originally suggested by Teledyne was found to be incorrect by about factor of three at Sea-Tac and Bangor. With the modified correction factor which has been adopted, the sensors can meet the calibration drift specification (less than ten percent in three months).

4) Large rapidly varying window signals were generated by wet windows, caused by blowing rain or snow. In contrast to the window signals caused by contamination, these wet window signals are not associated with significant measurement errors. On the other hand, large window signals are also sometimes observed when the sensor measured reduced extinction coefficients because of snow clogging. Teledyne has developed a window-signal algorithm that a) determines whether large window signals are due to contamination, wet windows or snow clogging and b) takes the appropriate action.

5) The snow calibration of the Teledyne sensors was found to be about 30 percent different from the fog calibration. This difference would result in systematically high RVR readings in snow. Teledyne has developed an algorithm that identifies when snow is likely and corrects the sensor calibration for the snow/fog difference.

6) The Teledyne sensor was found to be susceptible to snow clogging under severe conditions. It was observed to handle some conditions better than other instruments, both forward-scatter sensors and transmissometers, with horizontal pointing optics. In most cases the snow clogging reduced the sensor extinction coefficient response and was reflected in the window signals. The observed clogging was no worse than that observed with current RVR transmissometers and therefore is not considered an impediment to the deployment of the Teledyne system. However, future sensor modifications may be able to reduce or eliminate this problem.

RECOMMENDATIONS

1) The results of this evaluation support the deployment of the new generation RVR system.

2) Future enhancements of the Teledyne visibility sensor should be investigated to improve its perfonnance in snow.

1. INTRODUCTION

The FAA is a new generation RVR system from the Teledyne Corporation. This system utilizes forward-scatter sensors (see Figure 1), rather than the conventional

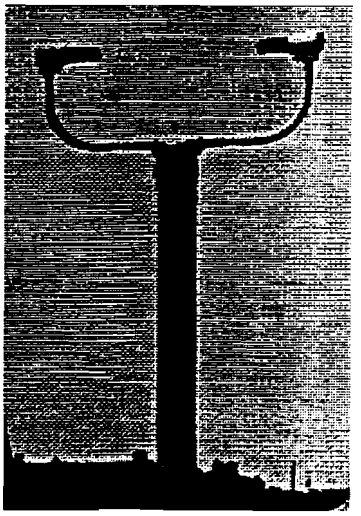

Figure 1. Teledyne Visibility Sensor on Frangible Pole

1.1 TRANSMISSOMETER

The transmissometer is the standard instrument for measuring the atmospheric extinction coefficient. The instrument consists of a narrow beam transmitter and a narrow beam receiver separated by a baseline (b). The extinction coefficient σ is measured as a reduction in the transmitted light reaching the receiver [$T = \exp(-\sigma b)$]. The coefficient can be related to the visibility by a number of equations that pertain to different situations. Runway Visual Range (RVR) is a visibility parameter used in aviation that the distance the runway lights can be seen under low conditions. The RVR is defined only below 6000 values of RVR are most frequently caused by fog and can also be caused by snow. All other common obstructions to vision will not reduce RVR below 6000 feet.

The transmissometer is a costly instrument to install and maintain:

1) Rigid are required because narrow beams are needed to avoid detecting scattered light.
2) The dynamic is limited because the signal measured is related exponentially to the extinction coefficient. Two different baselines are required to measure the full RVR range of 50 to 6000 feet.
3) The transmissometer measurements are very sensitive to window contamination for transmission values near 1.00. The windows must therefore be cleaned frequently.
4) The transmissometer is difficult to calibrate. The normal technique is to wait for a clear day and then set the transmittance to a value slightly below 100 percent, based on the visibility. If a transmissometer fails under reduced visibility conditions, is no way to restore it to service until high visibility conditions return.
5) The standard U.S. transmissometer uses an unmodulated light source and is therefore sensitive to in background light.

1.2 DEVELOPMENT OF THE FORWARD-SCATTER VISIBILITY SENSOR

Scatter instruments were developed as an alternative to transmissometers because they overcome all of the limitations of the transmissometer. As shown in Figure 1, they can be mounted on a single frangible pole. The signal S from a scatter sensor is directly proportional to the coefficient [$S = K\sigma$]. Hence the dynamic range is much

greater and the effects of window contamination much less.

The basic question to be answered is whether scatter instruments can produce the needed measurement accuracy. The development of the forward-scatter visibility sensor has spanned the last 30 years and has been concentrated mostly in the United States. By this time the limitations of the technology for common weather conditions have determined.

The first conceptual in the development of the scatter sensor was the observation that, for all common obstructions to vision, most of the extinction is caused by scattering, not absorption. Thus, in principle a measurement of all the scattered light would be equivalent to measuring the extinction coefficient. Instruments based on this concept are called nephelometers and they suffer from two problems: 1) They do not measure very small angle scattering which can be very significant for many obstructions to vision and 2) they usually use a confined scattering volume that cannot measure precipitation particles and may not measure fog droplets.

The second conceptual step in the development of a scatter sensor was the measurement of scattering at only a small band of scattering angles. Empirically it was found that a scattering angle of about 35 degrees gives a scattered signal proportional to the extinction coefficient σ for fogs with a variety of natural particle distributions. A recent study verified this concept for different fog particle size distributions!. The proportionality of the scattered signal to σ can be understood on the basis of the physics of light scattering by particles. The total scattering crossection for a particle is equal to twice the crossectional area of the particle because there are two scattering processes, direct scattering and diffraction scattering. The amount of "direct" scattering is equal to the amount of light hitting the particle and generally scatters the light in all directions. After the light wave has passed the particle it has a blank "hole" equal in area to the The diffraction of this hole produces "diffraction" scattering that is directed in the forward direction if the particle is much larger that the wavelength of light. The maximum significant diffraction scattering angle is proportional to the wavelength divided by the particle diameter. In fog, particles of 5 microns or greater in diameter produce most of the scattering. The diffraction scattering from such particles is smaller than 35 degrees and hence is not detected. The angular distribution of direct is much less size (for a broad distribution of particle sizes) than the diffraction scattering and hence the 35-degree scattering for fog is roughly proportional to the total scattering coefficient. As might be expected, this proportionality breaks down for the smaller particles characteristic of haze[2]. For the same wavelength the 35-degree signal is a larger fraction (typically by a factor of about 1.4) of the total scatter coefficient for haze than for fog. This effect is likely due to the larger diffraction scattering angles for the small haze

The third conceptual step in the development of the forward-scatter visibility sensor was the use of a scattering plate as a transfer calibration standard. It is not practical to define the absolute response of a forward-scatter instrument to a given obstruction to vision. Instead, a transmissometer is used to measure the extinction coefficient of a given fog and the gain of the forward-scatter sensor is set to give an equal measurement. This procedure involves a

number of sUbtleties that will be discussed later. Once several instruments of a given type have been calibrated against transmissometers, they are used to define the equivalent extinction of scattering plates that are precisely positioned in the center of the scattering volume of the sensor. A calibrated scattering plate can then be used 1) to transfer the transmissometer calibration to another unit of the same type and 2) to periodically check for any subsequent drift in the sensor gain. If the sensor scattering geometry and beam uniformity are consistent from unit to unit, then the scattering plate is a satisfactory representation of how the sensor would respond to a distributed scatter such as fog. Variations between the scattering plate signal and the fog signal as large as 15 percent have been observed in U.S. field tests. The U.S. RVR specification[3] requires that a calibrator plate represent the fog of a sensor to within seven percent.

1.3 U.S. TEST HISTORY

In 1985, after many years of field testing, visibility sensors were permitted in the FAA RVR System Specification. The accuracy requirements included in the specification were shown to be practical by means of field tests in 1983-4. Over the subsequent years of testing many improvements were made in the performance, calibration and production of such sensors. The formal reports[4,5,6] on field tests were made before many of these improvements were implemented. Two important reports (1985, 1988) are presently in the form of project memoranda and cannot be formally referenced. More recently, manufacturers have improved their forward-scatter sensor designs to resolve outstanding problems and additional manufacturers have developed forward-scatter sensors with innovative features. Unfortunately, information on these developments and their implications for RVR measurements is not readily available. A companion report[7] documents the current performance of a number of U.S. manufactured visibility sensors, including the commercial forward-scatter sensor manufactured by Handar, Inc. The data for the Handar commercial sensor is particularly relevant because the Teledyne RVR visibility sensor utilizes the same sensing head developed for the Handar commercial sensor.

1.4 WMO TESTS

In 1988 and 1989 the World Meteorological Organization (WMO) conducted a formal intercomparison test of visibility sensors in the UK.[5] A number of U.S. manufactured forward-scatter sensors were included in this test. The test report[8] presented the following conclusions and recommendations concerning forward-scatter instruments:

> "The scatter instruments, as a class, generally exhibited more variability and disagreement amongst themselves than transmissometers, particularly at low MOR. [MOR is meteorological optical range which is equal to the visibility of a black target in the daytime.] This was not without exception, however, and the results showed that two instruments of this type were capable of maintaining close with each other and also with the transmissometers, albeit with a substantial systematic offset. It is concluded, therefore, that the best of the scatter instruments are reliable enough at high

MOR for purposes, and that, given work on improving the conversion between sensor output and MOR, they may rival the best transmissometers at low MOR also. It also recommended that further work be carried out to investigate the effect of different particle size distributions the scattering function and hence on the performance of scatter instruments.•

"In general the scatter instruments showed no susceptibility to optical contamination. This makes them suitable for use at unmanned sites.•

Because of the raised by the WMO tests, the FAA Flight Standards Service has requested that appropriate testing and documentation provided for the Teledyne visibility sensors before the RVR system can be certified for airport operations. This summary report is intended to fulfill this requirement. A full evaluation report will be completed before the end of FY92.

1.5 U.S. TEST CONCLUSIONS

The U.S. work on the development of forward-scatter has come to somewhat opposite conclusions from those in the MOR report, that the RVR visibility range is well served by forward-scatter sensors, but that more must be addressed in building and testing sensors to be used in the high visibility range (> 6000 ft).

1.5.1 RVR Visibility Range (0-6000 tt)

Only *jog* and *snow* can reduce the visibility into the RVR range of less than one mile. Both of these obstructions to vision are "white" and non For white obstructions to vision the choice of instrument operating is relatively unimportant, both for scatter sensors and transmissometers. Traditional U.S. transmissometers, such as the Tasker 500, use a great deal of infrared light and the oldest, most mature U.S. forward-scatter sensors also some or all infrared light. older forward-scatter instruments are still suitable for RVR use. Section 3.1.3.3 data showing the similarity of visible and infrared in fog.

1.5.2 AWOSIASOS Visibility Range (114 to 10 miles)

In contrast to the RVR system, the Automated Observing System (AWOS) and Automated Surface Observing System (ASOS) report up to ten miles. For visibilities above one mile the obstruction to vision may be *haze* where the extinction coefficient can depend considerably on the wavelength of light. Comparisons between a standard U.S. transmissometer and a O.55-micron typically showed a factor of two difference in the measured extinction in haze. In response to this finding, the NWS and FAA have adopted a O.55-micron (peak of human visual response) transmissometer as the high visibility reference standard. The particle size distribution

effects mentioned in the WMO recommendations were shown[7] to be important for the AWOS!ASOS range but not for the RVR range.

1.5.3 Calibration Consistency

Some of the inconsistencies noted in the WMO tests and in earlier U.S. tests are related to the calibration method used for forward-scatter visibility sensors. Unlike a transmissometer, a forward-scatter sensor is not automatically calibrated in its response to an obstruction to vision. Consequently a more complicated calibration procedure is required:

1) The primary calibration is obtained by comparing several forward-scatter units against in fog.

2) These units are then used to determine an effective extinction coefficient (σ) value for calibration scattering plates, which can then be used in the field (or even inside) to check and!or set the calibration of a scatter sensor.

The satisfactory performance of secondary calibration scattering plates is dependent upon production control the scattering geometry (e.g., beam angles, beam divergence, calibrator positioning, etc.). The plane scattering of the plates can be significantly different from the volume from an obstruction to vision. For example, a difference of 15 percent was noted in a prototype unit that had an abnormally large transmitter beam divergence. Production quality control over the scattering geometry can be accomplished by comparing new units those originally calibrated under controlled test conditions. First, both new and original units must be calibrated with the same calibrator. Then their response to volume scattering must be compared; two test arrangements are possible:

1) Field testing can be carried out in fog.

2) If the sensors be operated in a closed room, a stable volume scatterer such as smoke can be used.

'.6 RELIABILITY DEVELOPMENT TESTS

New generation RVR systems were installed at 14 airports for a reliability development test. At two of these the Volpe National Transportation Systems Center installed monitoring equipment to record data from both the new Teledyne RVR system (using Handar forward-scatter senSOIS) and the old Tasker 500 RVR system (using transmissometers). These installations completed in the spring of 1991. The incidence of fog is low in the summer and relatively few events were recorded until fall. Initial data from both sites indicated that the Teledyne visibility sensor tracked well with the transmissometer measurements, but had an extinction coefficient calibration that is roughly 20 percent low (see Section 2.1). The data, however, were of poor quality because of interfacing problems and therefore of limited usefulness in defining an new calibration. A definitive calibration was needed before the Teledyne RVR systems could become operational.

1.7 OTIS TESTS

Because of the limitations of the airport tests, the decision was made to install a complete RVR system (less runway light monitor) at the Otis Weather Test Facility. The remote maintenance port interface, which reduced data quality in the airport tests, was abandoned and the Teledyne firmware was modified to provide reliable one-minute average data via the external user's port. The Otis site experiences a significant amount of fog in every month and is equipped with a full complement of reference visibility sensors.

1.8 ST. JOHNS TESTS

All optical instruments are likely to suffer some window blockage under severe blizzard conditions. The operational limits of the Teledyne sensor were examined by installing two units at the Canadian visibility test site in 51. Johns, Newfoundland, where severe weather is frequent and the wind blows from all directions during storms. Additional blowing snow data have been obtained from Bangor and Otis. If the Teledyne window algorithm detects a snow-clogged window, the sensor data will be flagged as unusable. However, if such clogging remains undetected, then the reported RVR value can become much higher that the actual value.

1.9 SCOPE OF REPORT

This volume (Volume 1) of the report summarizes the results of the The primary focus will be the results from the Otis test site, which assessed the performance of the Teledyne sensors under carefully controlled test conditions. Otis data through 6/11/92 are included. Preliminary data will also be presented from the other sites.

Volume II of the report will present more details of the tests and analysis methods, and will include complete data analysis for all test sites through the summer of 1992. It will also include a computer simulation of the effects of manufacturing errors on sensor calibration consistency.

2. FIELD TESTS

2.1 AIRPORT TESTS

2. 1. 1 *Installation*

Two of the reliability development test sites, Sea-Tac and Bangor, were selected for comparison monitoring of data from the new Teledyne RVR system and the operational Tasker 500 system. The data collection computer was interfaced directly to the Tasker 500 signals, but was interfaced to the Teledyne system through the MPS port using MPS simulator software.

At Bangor all three sensors were located near the corresponding Tasker transmissometers; the from the two sensor types were therefore well correlated. The sensors at Sea-Tac were about a half mile apart; consequently, spatial variations in the fog density often these two sensors to disagree.

2.1.2 Sample Airport RVR Data

Figures 2 and 3 sample RVR measurements at touchdown location from the and Teledyne systems far Sea-Tac and Bangor, respectively. In general, the valuesfrom the two track, but the Teledyne values are consistently higher than the Tasker values. The Sea-Tac 2) show typical differences of two or three reporting increments. The Bangor data (Figure 3) showed. better agreement, i.e. typical differences of one or two reporting increments. As will be shown below, most of the difference was caused by calibration errors in the Teledyne sensors. It should be in mind, however, that slightly different equations are used to calculate RVR by the two systems. A more accurate comparison of the RVR from the two systems will result from using exact!y

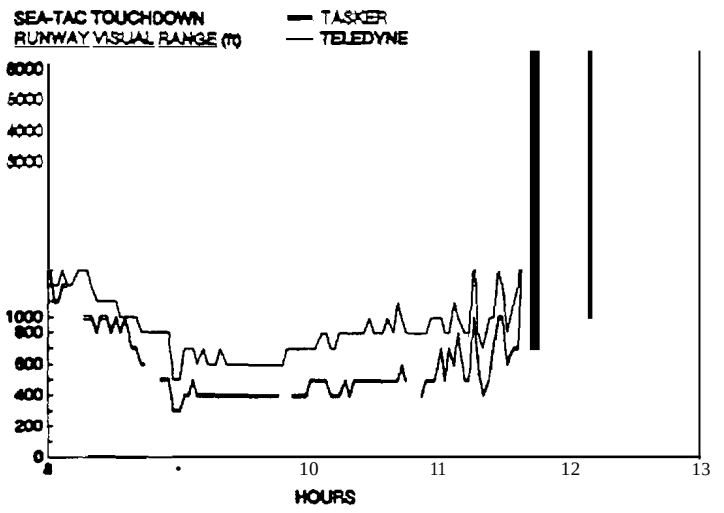

Figure 2. Sea-Tac RVR at Touchdown Location

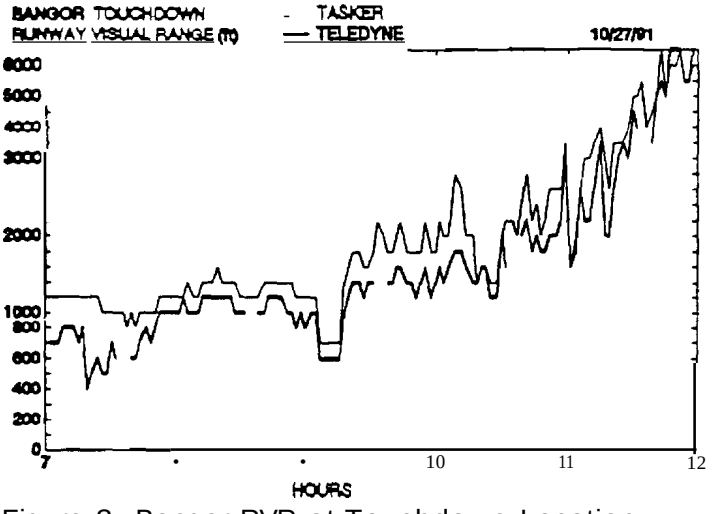

Figure 3. Bangor RVR at Touchdown Location

the same equations; this approach will be adopted for the remainder of this report.

The RVR value is calculated from equations that include three measurements:

1) Extinction coefficient σ from the visibility sensor,

2) Ambient light level from the ambient light sensor, and

3) Runway light intensity.

2. 1.3 *Sample Airport Data*

Figures 4 and 5 compare the extinction coefficient values measured by the Tasker and Teledyne visibility sensors at the touchdown location for the Sea-Tac and Bangor, respectively, for the same periods shown in Figures 2 and 3. When the extinction coefficient is high the RVR is low and vice versa. These plots show that the Teledyne extinction coefficient is consistently lower than that measured by the Tasker transmissometers; this difference accounts for most of the RVR differences in Figures 2 and 3.

2. 1.4 *Sample Airport Ambient Light Data*

Figures 6 and 7 show the ambient light levels measured by the two systems for the same time periods shown in Figures 2 through 5. The Teledyne ambient light sensor (ALS) measures ambient light as a continuous variable, as can be seen in the plot. The Tasker ALS defines

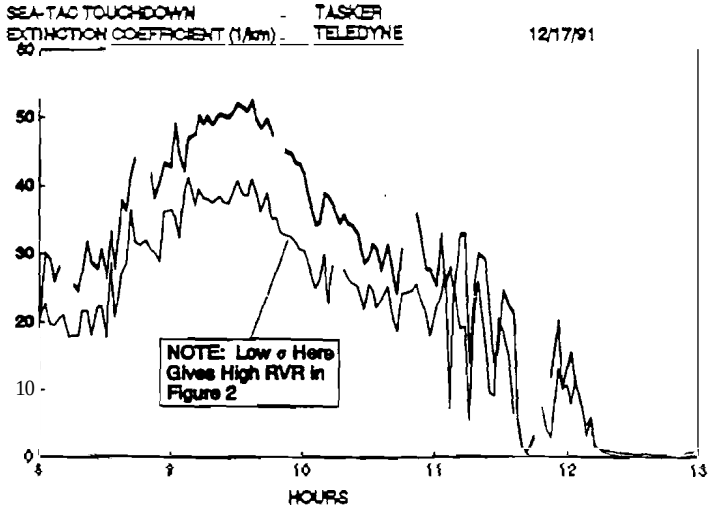

Figure 4. Sea-Tac σ at Touchdown Location

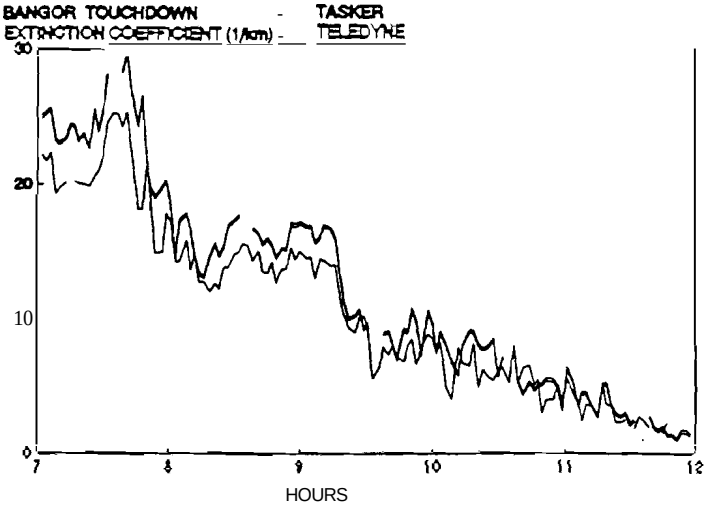

Figure 5. Bangor σ at Touchdown Location

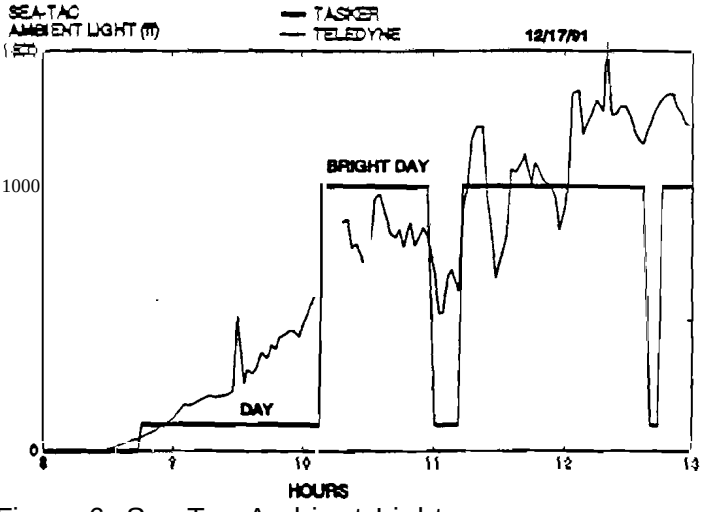

Figure 6. Sea-Tac Ambient Light

four ambient light levels (night, twilight, day and day) depending upon the ambient light exceeds three thresholds. The Tasker ALS data in Figures 6 and 7 are plotted as the highest threshold that been exceeded. The between day and bright day is noted in the figures. Note that, at transition, the Teledyne ALS measures somewhat over half of nominal Tasker value. Since the Teledyne sensors have been calibrated at the factory and the Tasker units have never been recalibrated, the error is likely in the Tasker units. Since the RVR value is insensitive to ambient light, this disagreement is not very significant (see Section 3.3.1). In general the ambient light values used by the two systems to calculate RVR were not very different over these periods of time.

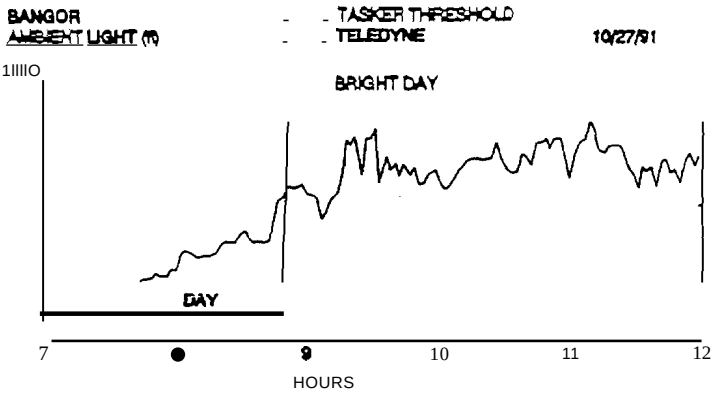

Figure 7. Bangor Ambient Light

2.1.5 *Sample Runway Light Setting Data*

Figures 8 and 9 compare the runway light setting for the two systems. The two systems agree exactly at Sea-Tac, apart from one glitch. More extensive appear at Bangor because the Tasker system there reads a switch rather than the actual runway light

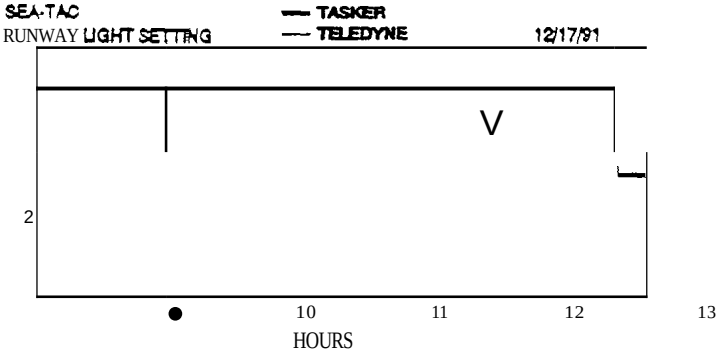

Figure 8. Sea-Tac Runway Light Setting

The Sea-Tac runway lights were at setting 5 for most of the selected period, thereby the maximum possible RVR value. The Bangor RVR values in Figure 3, however, are affected by the light setting. The times when the lights are off Oight setting 0) have a significantly lower RVR. The drop in RVR is most at 0910 and 1025 hours. One time (0720) when the two systems read different light settings also a noticeable effect on the RVR.

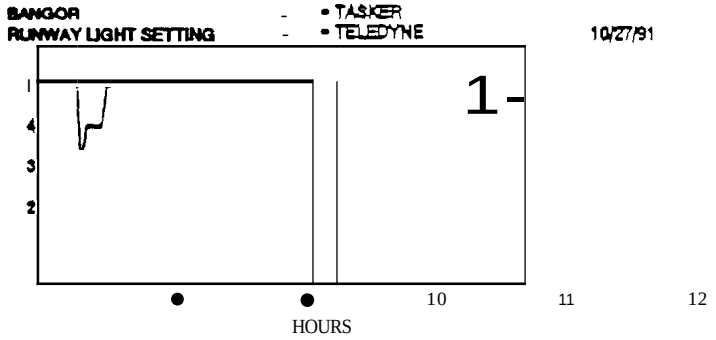

Figure 9. Bangor Runway Light Setting

2. 1.6 *Fog Events*

Tables 1 and 2 list the early fog events for the Sea-Tac and Bangor airports, respectively. The date and times of the event are listed along with the maximum extinction coefficient σ observed. Only events with a maximum σ of 20 lan-lor greater are included so that the results will be representation of fog.

For each event Tables 1 and 2 list the slope of the extinction coefficient scatter plot between the Teledyne visibility sensor and the collocated Tasker tl'ansmissometer. The slope is obtained by a least-square fit to the data. In parentheses after the slope is the fractional residual deviation (FRSD) of the fit which is an indicator of the quality of the fit. A low value of FRSD means the fit is good. Traditionally only slopes with FRSD below 0.10 were used for calibrating sensors. The data in Tables 1 and 2 include only events and scatter with FRSD of 0.21 or less. (Note that the FRSD calculated as the residual standard of the event divided by the mean extinction coefficient of the x-axis sensor.)

TABLE 1. Scatter Plot Slopes for Sea-Tac Fog Events

Date	Hours	Max σ (km⁻¹)	Touchdown	Midpoint	Rollout
4/19/91	0540-0830	45-50	0.822 (0.090)	0.784 (0.081)	0.814 (0.17)
9/29/91	0000-1200	40-50	0.750 (0.16)	0.731 (0.18)	
10/8/91	0000-1100	25-30	0.794 (0.16)	0.684 (0.19)	
		Average	0.196	0.748	

TABLE 2. Scatter Plot Slopes for Bangor Fog Events

Date	Hours	Max σ (km")	Touchdown	Midpoint	Rollout
6/19/91	0400-0130	20-25	0.844 (0.18)		0.891 10.13)
7/24/91	0000-0100	25-30	0.819 10.11)	0.823 (0.20)	
811/91	0000-0800	25·30	0.835 (0.093)	0.76410.15)	0.859 10.15)
9/6/91	0000-0900	25-30	0.855 (0.20)	0.852 /0.201	0.811 (0.211
9/17/91	0000-0930	25-30	0.893 (0.078)	0.845 (0.141	0.844 (0.101
9/24/91	0300-0830	55	0.836 (0.131	0.822 (0.151	0.147 (0.19)
9/26/91	2000-2400	20-25	0.817 (0_21)	0.822 (0.18)	0.748 (0.20)
10/3-4/91	1930-0800	30-35	0.808 (0.14)	0.831 10.131	0.789 10.15)
10/25-26/91	1530-0939	33-40	0.831 (0.0861	0.809 (0.131	0.791 10.0931
11 {2-3/91	1600-1030	24·28	0.780 (0.098)	0.842 (0.095)	0.836 (0.0671
	Weighted Average		0.833	0.821	0.817

The slopes show considerable scatter. A weighted average of the slopes was calculated to obtain a more meaningful comparison between different sensors. The data were weighted by the inverse of the FRSD. The average slopes for Bangor were remarkably consistent for the three sensors. The averages were somewhat smaller for the two usable Sea-Tac locations,

but the number of data points is much smaller than for Bangor.

2.1.7 Data Quality

Because of the limitations of the MPS interface, data from the Teledyne system were recorded only every two minutes. Concurrent one-minute average data were recorded for the Tasker system. The original Teledyne finnware at Bangor and Sea-Tac gave relatively poor data:

1) All extinction coefficients below 1.52 lan-I were clipped; the high visibility data could therefore not be used to estimate the transmissometer lOO-percent calibration.

2) The raw data collected was averaged for only two seconds and therefore contained more variation than the normal one-minute average collected at the other test sites and used to calculate RVR.

Nevertheless, the airport data showed that the Teledyne sensors had a calibration error of about 20 percent.

2. 1.8 *Improved Airport Data*

On 4/21/92 the Teledyne firmware at Bangor was updated to the same version in use at Otis (see Section 2.2.3) and the primary Otis calibrator *(SIN* 0004) was used to calibrate the Bangor sensors. Figure lO shows the improved RVR agreement obtained for the same sensor comparison as in Figure 3 (using RVR values calculated for no runway lights during the daytime). The agreement between the Teledyne and Tasker data is good; the systematic RVR difference between the two sensors is typically one reporting increment or less.

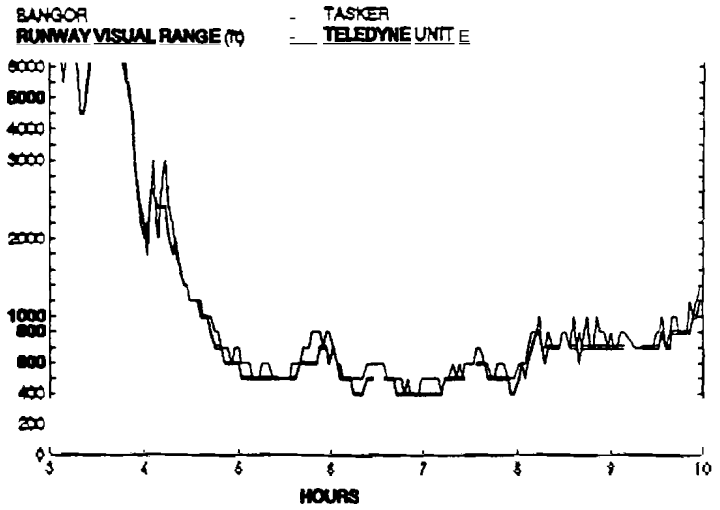

Figure 1O. Bangor RVR at Touchdown Location

2.2 OTIS TEST

The Otis test will be described in this section. Because the Otis results fonn the bulk of this report, they will be presented in Section 3. Figures 11 through 15 show sample calculated RVR comparisons for the various sensors at Otis.

A Teledyne production RVR system with three visibility sensors and one ambient light senor

was installed at the Otis Weather Test Facility (WTF) on 9/24/91. The Teledyne visibility sensor windows were cleaned whenever the reference transmissometer windows are cleaned.

The Otis data acquisition was based on the Teledyne external user serial data port rather than the MPS port used in the airport tests. This change permitted data to be obtained as needed rather than being limited by the response time of the MPS port. The Teledyne external user ASCn message was reprogrammed to output the desired test data as one-minute averages in the format outlined in Table 3.
The external user message is output every two seconds and was interfaced to serial ports on each of the Otis data acquisition computers.

The Otis data were used to verify that the Teledyne sensors meet the FAA RVR accuracy specification and to obtain an accurate calibration for the sensors (see Section 3).

TABLE 3. Otis External User Port Format

Data Element	Format	Units
Ambient light	xxxxx.x	Foot Lamberts
Each Visibility sensor:		
Extinction coefficient σ	xxx.xx	km-'
Transmitter window	nn	0.5 %
Receiver window	nn	0.5 %
RVR	nn	100 Feet

2.2. 1 *Otis Visibility Standards*

Table 4 lists the Otis reference transmissometers. OPT is an Optec visible-light transmissometer that serves as a reference in the visibility range of 1/4 mile to 10 miles for testing Awas and ASOS sensors. The four other units are Tasker 500 transmissometers. The 300- and 500-foot units have perpendicular baselines with a common midpoint. [[he Teledyne sensors were installed within 100 feet of the midpoint.] The lO00-foot unit uses the same projector as the 500-foot unit, but with the receiver an additional 500 feet away. S300 and 1'300 use a common projector but separate receivers placed side by side. The 300- and 500-foot transmissometers are used to generate an average measurement that will be tenned "TAVE" in the subsequent analysis.

TABLE 4. OTIS REFERENCE TRANSMISSOMETERS

CODE	BASELINE	COMMENTS
OPT	1000 ft	0.55 microns
SOOO	1000 ft	Full incandescent spectrum
T500	500 ft	0.55-micron short wavelength pass filter
T300	300 ft	0.55-micron short wavelength pass filter
S300	300 ft	Full incandescent spectrum
TAVE		Average σ measurement of T300 and T500

The Tasker·500 transmissometer uses an incandescent projector lamp and a silicon

photodiode detector. background checks of all four units are carried out once per hour for about 3 minutes. The length of the background check is designed to accommodate an unsynchronized data system.

In 1988 filters were introduced into the 300- and 500-foot units (T3oo and T5OO) to eliminate far red and infrared contained in the full spectrum of the Tasker incandescent lamp. The filters have a at 0.65 microns and a nominal transmission of 2/3 in their pass band. The addition of such a filter reduced the transmissometer signal to ten percent. Thus, about 85 percent of the response of an unfiltered transmissometer is due to light of wavelengths longer than 0.65 microns.

The FAA transmissometers at Sea-Tac and Bangor do not have filters (like S300 and SOOO in Table 4) and therefore could conceivably have a different calibration than those at Otis. Section 3.1.3.4 shows that, in fact, there is a small (about three or four percent) but fairly consistent calibration difference; this difference is too small to have a significant effect on RVR accuracy.

The sensor calibration presented in Section 3.1.3.4 will use both TAVB and S300 as reference sensors. TAVE will be used to define the Teledyne sensor calibration for the following reasons:

1) The average of the two crossed transmissometers (TAVE) is more stable and gives less scatter than the measurement of a single transmissometer (S300). S300 also suffers from calibration instability caused by electronics drift. In addition to increasing the spread of 5300 calibrations, this problem may also account for the observed small difference between 5300 and TAVB.

2) The use of a reference (TAVE) is more appropriate for human vision and is closer to the *ICAD* RVR requirement for a photopic filter in the transmissometer receiver.

Note that, using TAVE as the calibration reference may cause the calibration of the new generation RVR system to be slightly different (few percent higher visibility) than that given by existing airport transmissometers.

The Otis are cleaned regularly and maintained to have a stable calibration. The is changed only when serious calibration errors arise. The Otis transmissometer data is automatically recalibrated whenever the visibility is above 20 miles (as determined by a very stable HSS forward-scatter sensor). This method of calibration actually extends the useful range of the Otis transmissometers beyond the conventional visibility limit of 20 times the baseline. Since the recalibration is done only when the visibility is at least a of 20 above the RVR range (which is less than one mile), insignificant calibration error is introduced into the RVR measurements.

2.2.2 Teledyne Units

Five Teledyne visibility sensors in all have been tested at Otis. Table 5 lists the serial numbers for these five units; each unit consists of a transmitter, receiver and yoke, any of which can be individually replaced. The sensor interface electronics (SIE) units are also listed. Units A, B and C were tested for seven months at Otis. Units D and E were moved to Otis from Bangor in early lune, 1992 (Units B and C from Otis replaced units D and E at Bangor).

TABLE 5. Teledyne Units Tested at Otis

	Serial Numbers			
Unit	SIE	Yoke	Xmtr	Revr
A	62	097	235	214
B	73	147	151	147
C	72	141	229	189
0	73	049	075	049
E	72	013	019	057

2.2.3 Teledyne Firmware Changes

The Teledyne firmware installed on 9/24/91 did not give stable sensor calibrations. Each recalibration appeared to change the calibration by an amount on the order of five to ten percent.

Teledyne conducted a thorough evaluation of both their firmware and the method of calibrating the scattering plates. On 12/12/91 new calibration firmware was installed at Otis and a newly calibrated scattering plate *(SIN* 0004) was used to set the calibration. The new firmware contained the following changes:

1) The zero-signal voltages are measured at the same time as the signal voltages rather than at a later time.

2) The internal calibration and correction of the analog-digital conversion was removed.

3) More information is provided to the operator concerning calibration changes.

The revised firmware showed no signs of calibration variation. The cause of the earlier problem, however, was not identified. Although zero variations [change 1)] could produce a random variation in calibration, it was not clear that the size of the zero variations were large enough to account for the observed calibration variations.

The Teledyne sensor is designed to measure the sensor window contamination by looking at radiation backscattered from the windows; it uses the measurement to correct the measured extinction coefficient for window losses. This approach was selected in order to meet the required FAA three-month maintenance cycle. The sensor issues an alert when the correction reaches a certain level and shuts down the sensor when a higher threshold is reached.

The Teledyne sensor was observed to shut down because of excessive "dirty" window signals

whenever blowing rain or snow hit one of the sensor windows. The problem was caused by strong scattering from water droplets on the windows. In late January 1992 the sensor firmware was changed to eliminate the fixed limits on window signals and to permit the sensor to report window signals without correcting the measured extinction coefficient. The three Otis sensors were then reoriented so that each would be pointing in a different direction and therefore would be affected differently by blowing rain or snow, depending upon the wind direction.

2.3 ST. JOHNS TESTS

A teledyne RVR system with two visibility sensors was installed at the St Johns' airport on *2/12/92.* The firmware was the final version developed for Otis. The sensors were calibrated with the primary Otis calibrator *(SIN* 00(4). The other visibility sensors at the 5t Johns site included a nearby standard transmissometer and forward-scatter sensors manufactured by Qualimetrics, Belfort and H5S.

The St. Johns data determined how severe snow conditions must be to cause sensor snow blockage.

3. RESULTS

3.1 COMPLIANCE WITH RVR SPECIFICATION

The Otis data were processed to detennine whether the Teledyne sensors comply with the FAA RVR specification[3].

3.1.1 Test Period

The specification a minimum three-month test period. The test period selected began on 12/13/91 after the calibration problems were resolved (see Section 2.1.3) and continued through 6/1/92, when some of the Otis sensors were removed. Data from 3/8/92 through *3/12/92* were omitted because the Teledyne system was disabled by a lightning surge which damaged its lightning protection system.

3.1.2 Accuracy

Table 6 lists the three accuracy tests required for the measured extinction coefficient σ_{Test} from the test sensor. The first two tests require that 90 percent of the data points have ratios of $\sigma_{Test}/\sigma_{Reference}$ that lie within specific limits, which are different for the two σ ranges. The third test requires that 99 percent of the data points over the full σ range have σ_{Test}-$\sigma_{Reference}$ differences of less than a factor of two.

TABLE 6. RVR Accuracy Requirements

σ Range (km^{-1})	σ Ratio Limits (Test to Reference)	Percent of Data
1.5 - 10	0.67 - 1.33	>90
10 - 300	0.75 - 1.25	>90
1.5 - 300	0.50 - 2.00	>99

The data are to be divided into three classes: fog (Le., no precipitation), snow and rain. The data set must include at least ten percent snow and five percent rain. The reference measurement $\sigma_{Reference}$ is to be the average of two crossed transmissometers (such as TAVE). To assure reference data integrity and homogeneous conditions, data are to be excluded whenever the two transmissometers disagree by more than 10 percent.

Table 7 shows the results of the three RVR accuracy tests in Table 6 for the three original Teledyne sensors at Otis (Units A, B and C, identified in Table 5). All three requirements are met for these three senors. Note that the calibration corrections derived in Section 3.1.3.4 have been applied to the data. In the following discussion of the accuracy analysis, only the data for Unit A will

TABLE 7. RVR Accuracy Results

σ Range (km^{-1})	σ Ratio Limits (Test to Reference)	Percent of Data Unit A	Unit B	Unit C
1.5 - 10	0.67 - 1.33	95.6	96.2	95.6
10 - 300	0.75 - 1.25	99.6	99.0	99.5
1.5 - 300	0.50 - 2.00	99.9	99.7	99.1

be presented when the results are essentially the same for all three units.

For Unit A the total number of valid data points was 7983. Each valid data point is a one-minute average, taken every minute, subject to the condition that noo and T500 must differ by less than ten percent. The breakdown by class of obstruction to vision was: fog-83.8%, snow - 14.1% and rain - 2.1%. An HSS precipitation identification sensor to determine the presence and type of precipitation. The amount of rain data is less than the 5% requested by the specification. This lack is likely due to two causes:

1) Rain rarely generates a σ value above 1.5 lan,l unless is mixed with fog.
2) The HSS precipitation identification sensor is insensitive to rain in fog.

Table 8 shows how the low σ range (1.5 - 10.0 km,l) accuracy depends upon the obstruction to vision class. (Virtually all σ > 10.0 lan-I data are for fog.) Both fog and snow readily meet the 90-percent requirement. In rain, however, only about 60 percent of the data points lie within required ratio limits. The poor performance in rain does not prevent the overall performance in Table 7 from being acceptable because of the small amount of rain. Even if the weighting of rain were increased from the observed 2.1% to the required 5%. the overall sensor performance would be satisfactory. The poor sensor .performance in result is due to the well known disagreement[9] between transmissometers and forward-scatter sensors in fogless rain, which is the type of rain most readily detected by the HSS precipitation identification sensor.

TABLE 8. Low σ Range Accuracy by Class

Class	Unit A Points	Percentage within Limits Unit A	Unit B	Unit C
Fog	5075	96.5	97.8	96.5
Snow	1124	96.8	94.0	97.8
Rain	157	58.0	66.9	53.8

Table 9 shows how many data points were rejected by the requirement for lO-percent agreement between the two reference transmissometers. About one third of the data points were rejected for the low σ range and about one sixth for the high σ range.

TABLE 9. Transmissometer Homogeneity Test Results (Unit A)

σ Range (km⁻¹)	Valid Points	Invalid Points
1.5 - 10	6356	2985
10 - 300	1627	332
1.5 - 300	7983	3317

3. 1.3 *Calibration Consistency*

The RVR Specification[3] requires that calibration plates must give a sensor calibration within seven percent of the fog calibration. This relationship between sensor calibration and the actual sensor fog response depends upon:

1) The consistency of the calibration plates (Section 3.1.3.1) and

2) The consistency of the sensor scattering geometry (Section 3.1.3.3).

3.1.3.1 Calibration Plate Consistency

The RVR that calibration plates must give a consistency of better than three percent when different calibrators are placed into different instruments.

On April 3, 1992 four calibration plates were measured in the three Otis sensors; the windows cleaned before measurement and the signals were averaged for about ten minutes for each combination. The results are presented in Table 10:

TABLE 10. Calibrator Intercomparison

Sensor	0001	0004	0027	0034
	Calibrator Serial Number			
	σ Measurement (km^{01})			
Teledyne	63.5	65.5	77.4	N/A
Unit A	63.86	65.77	78.65	80.48
Unit B	63.55	65.28	78.98	80.28
Unit C	64.55	66.38	82.09	82.19
	Ratio to Unit B			
Unit A	1.004	1.007	0.996	1.002
Unit C	1.015	1.017	1.039	1.024
	Recalibrate using SIN 0004			
	Ratio to Unit B			
Unit A	0.997	1.000	0.989	0.995
Unit C	0.998	1.000	1.022	1.007

1) The top row of the table lists the calibrator σ values (low range) measured by Teledyne in their standard sensor and printed on the calibrator *(SIN* 0034 from Bangor was not measured by Teledyne). The next three rows of the present the Otis σ measurements for each sensor/calibrator combination. The results for the first three calibrators agreed well with the measurements used by Teledyne to define the nominal calibrator values.

2) The second section of the table analyzes the σ variation for the different combinations. It presents the ratio of σ for Units A and C to that for Unit B. The maximum difference is 3.9% for Units B and C for calibrator 0027. This difference is not, however, a fair check on calibrator consistency since the measurements for calibrator 0004, which was used to calibrate the units, did not give identical measurements for the three sensors (perhaps due to calibration drift) and hence would be considered to be out of calibration.

3) The bottom section of the table recalibrates all units to give the same reading for calibrator 0004. The then indicate the variation due only to calibrator inconsistency; the resulting variation is less than in the second section of the table. Calibrators 0001 and 0034 give the same readings as 0004 to within one percent. Calibrator 0027 shows a maximum difference of slightly greater than two percent. The four calibrators are thus observed to give very consistent measurements in the three sensors and readily meet the RVR Specification consistency requirement of three percent.

3.1.3.2 Calibration Determination

The traditional method of determining the calibration of a forward-scatter sensor involves fitting a straight line to the σ data for the sensor and the reference transmissometer from a fog event. This method leads to results 1) that depend upon the σ range used and 2) that

differ from event to event. No fully satisfactory method for combining data from different events has been developed (Section 2.1.5 presented one option).

A systematic method was developed for determining the actual calibration of a forward-scatter visibility sensors over a long test period. The method makes use of the meteorological optical range (MOR) which is equal to daytime RVR with runway lights off. [MOR is related to the extinction coefficient *0* by MOR = *3/0*, where the corresponding units (e.g., Ian and Ian-I) are used for MOR and *o,* respectively.] The MOR ratio for the test sensor and reference transmissometer is computed for each one-minute-average data point. The distribution of the MOR ratios is then used to evaluate the relative calibration of the test and reference sensors and the degree of agreement. Only data points where the reference sensor is within a suitable MOR range are included in the calibration; Table 11 shows the MOR limits selected for the two RVR obstructions to vision: fog and snow. The lower limit for fog is set by the operating range for the 500-foot reference transmissometer (1'500). Snow calibration will be addressed in Section 3.3.2. The data ranges in Table 11 were selected to include data with little systematic shift and similar spread, as viewed in a box Box plots will not be presented in this summary report, but will be included in full report.

TABLE 11. MOR Limits (feet) for Sensor Calibration

Obstruction	Lower	Upper
Fog	261	2070
Snow	1037	10375

The test periods selected for calibration are 12/13/91 through 317/92 (period I), 3/13/92 through 6/1/92 (period 2) and 6/5/92 through 6/11/92 (period 3). Data were disagregated using the precipitation type and amount determined by an HSS present weather sensor. Data with no precipitation were used for the fog calibration. A lo-percent homogeneity criterion was used. Table 12 shows the number of valid fog data points obtained for Unit A for each of the three test periods for three different reference sensors.

TABLE 12. Number of Fog Data Points: Unit A

Reference	Period 1	Period 2	Period 3
Unit C	1398	2158	N/A
TAVE	1691	2314	770
5300	1737	2280	758

3.1.3.3 Sensor Geometry Consistency

Two methods can be used to determine the calibration consistency of the Teledyne sensors. The first, shown in Table 13, intercompares the sensors. The second, shown in Figure 14, calibrates the five Teledyne sensors relative to the two reference transmissometers TAVE and S300.

In Table 13 Teledyne Unit C is used as the reference and the MOR ratio distributions are evaluated for ,Units A, B and C. Since Unit C agrees exactly with itself, the Unit C column

of Table 13 shows how an ideal sensor would behave. The median of the MOR distribution is 1.000 and the spreads (Δ) are approximately 0.000.

TABLE 13. Teledyne Intercomparison in Fog

Reference Unit C	Period	Unit A	Unit B	Unit C
Median	1	1.016	1.068	1.000
	2	1.014	1.101	1.000
50% Δ	1	0.056	0.028	0.008
	2	0.060	0.054	0.008
90% Δ	1	0.192	0.100	0.016
	2	0.172	0.162	0.016

The statistical analysis of the MOR ratio calculates five percentiles of the ratio distribution (5, 25, 50 (median), 75 and 95). The median (50 percentile) represents the systematic disagreement between the test sensor and reference. The spread of the distribution is summarized as the 50-percent Δ (difference between 25 and 75 percentiles) and the 90-percent Δ (difference between 5 and 95 percentiles). Half of the MOR ratios lie within the 50% Δ and 90 percent of the MOR ratios lie within the 90% In Table 13 the C-C comparison shows how much the calculation method broadens the distribution, which should have zero spread. This broadening is much less than the observed spreads for different sensors (e.g., A and C).

The Teledyne sensor intercomparison in Table 13 shows that the median MOR ratio in fog is the same for the three original Otis sensors to within ten percent. The ratio spread in fog is small and is only half as much for B-C as for A-C for Period 1. This difference is likely caused by spatial variations in the fog, since Units A and C are about 100 feet apart and Units B and C are only 10 feet apart. Less variation with separation was noted in Period 2.

Table 14 shows the same median variation in fog response as Table 13 for Units A, B and C. The median fog calibration values vary by at most ten percent for these three Teledyne sensors, with differences of at most two percent

TABLE 14. Fog Calibration

Reference	Period	Unit A	Unit B	Unit C	Unit 0	Unit E
TAVE						
Median	1	0.978	1.029	0.963		
	2	0.962	1.044	0.947		
	3	0.977			1.058	1.065
50% A	1	0.063	0.066	0.062		
	2	0.059	0.066	0.058		
	3	0.073			0.093	0.085
90% Δ	1	0.188	0.223	0.212		
	2	0.170	0.179	0.176		
	3	0.219			0.236	0.231
5300						
Median	1	1.018	1.073	1.005		
	2	0.997	1.083	0.983		
	3	0.983			1.072	1.072
50% Δ	1	0.072	0.080	0.077		
	2	0.074	0.077	0.067		
	3	0.098			0.121	0.113
90% A	1	0.263	0.322	0.306		
90% A	2	0.195	0.208	0.192		
	3	0.242			0.297	0.281

between the two calibration periods; the spreads were generally larger for the Period 1. The median calibrations for the two reference transmissometers differ by about four percent (5300 giving higher MOR ratios). The spreads are somewhat larger for 5300 than for TAYE. The spreads in fog are small and are comparable (for TAVE) to the A-C spread in Table 13.

Since the observed calibrator variations (Section 3.1.3.1) are generally less than two percent, the ten-percent variation noted in the fog responses of Units A, Band C, must therefore be mostly due to sensor scattering geometry variations, not anomalies in calibrator 0004 which was used to set the calibration. The calibration differences would explain only a small part of the Period 1 B-C calibration difference in Table 14 (Unit B 7.0% higher MOR than Unit C); Table 10 shows a 1.7% higher σ for Unit C than for Unit B (1.7% higher MOR for Unit B than for Unit C, since MOR and σ are inversely related).

The observed calibration differences between different Teledyne sensors have a minimal effect on RVR performance. Figure 11 shows the effects of differing sensor calibration on the calculated RVR (daytime, no runway lights) for the two sensors (Units A and E) with the largest calibration difference of those installed at Otis during Period 3. The RVR values generally differ by at most one reporting increment and often agree exactly. Under conditions where the runway lights are turned on to increase the RVR, the sensor differences would become even less important.

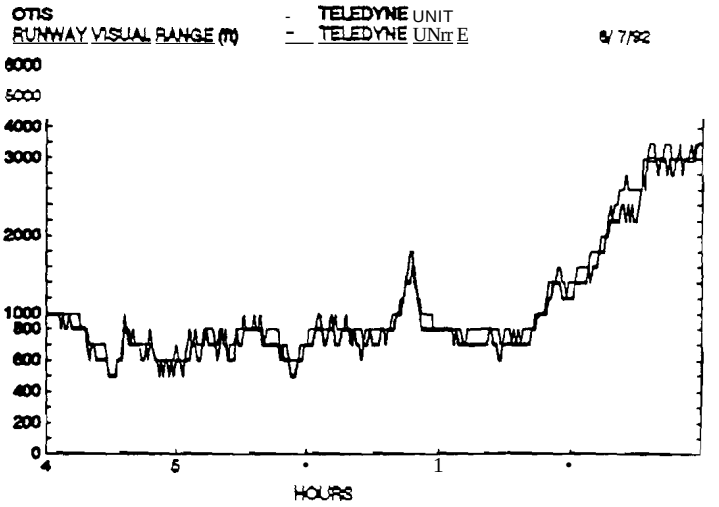

Figure 11. Teledyne RVR Comparison at Otis

3.1.3.4 Sensor Calibration

TAVE Reference (Visible Light) The raw calibration of the Otis sensors was corrected (multiply measured σ by 0.965) for all the data presented in Table 14 and for the data used in Section 3.1.2 to assess sensor accuracy using TAVE as reference. This recalibration was designed to give minimum calibration spread for Period 1 using TAVE as reference. The first row of Table 14 shows that the three sensors are within $\pm 3.7\%$ of the correct fog calibration. The results for Period 2 (second row Table 10) show correct calibrations within $\pm 5.3\%$. The addition of Units D and E for Period 3 extend the calibration spread to $\pm$ 6.5%, which is still within the $\pm 7\%$ specification requirement. Figures 12 and 13 show how these errors affected the RVR response (daytime, no runway lights) of Units A and E during Period 3 with TAVE as reference. Unit A (Figure 12) gives excellent agreement. Unit E RVR values (Figure 13) sometimes differ by one reporting increment from TAVE.

Since the total spread in TAVB median calibration values of Table 14 is only 11.8%, the ± calibration spread could be improved slightly by a half-percent calibration adjustment (multiply σ by 0.970 rather than 0.965).

8300 Reference (Mostly Red and Infrared) - If S300 is used as the reference, Table 14 indicates that approximately the best calibration will result if all ratios are reduced by about 3.5 percent. This change is equivalent to omitting the 0.965 correction factor which was applied to the data of Table 14. Thus, the nominal calibration of the Teledyne units is correct if 5300 is used as the reference. Figures 14 and 15 show how the resulting affected the RVR response of Units A and E during Period 3 with 5300 as reference. As might be expected, the results are similar to those for the TAVE reference: Unit A (Figure 14) gives good agreement, but the Unit E RVR values (Figure 15) often differ by one reporting increment from TAVEt Note that Figure 15 for Otis shows data for the same sensor shown in Figure 10 for Bangor; the results are similar when compared to a unfiltered tI'ansmissometer.

3.1.4 Calibration Drift

The FAA RVR Specification] requires that sensor calibration must not drift by more than percent in three months.

The Teledyne sensors measure the transmitter and receiver window contamination by means of

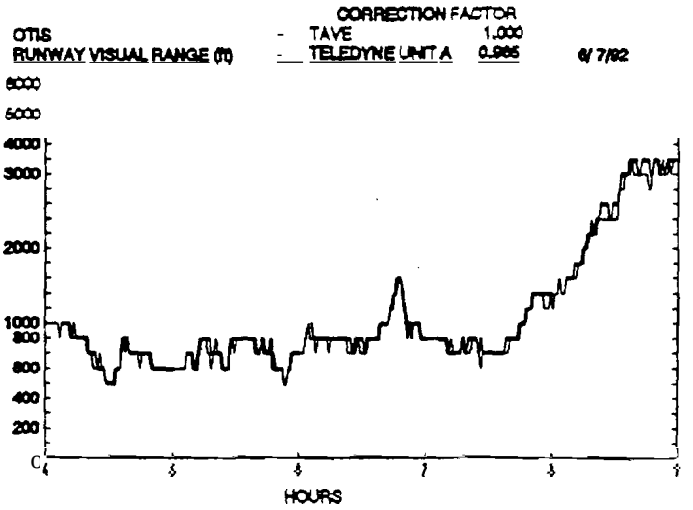

Figure 12. RVR: Teledyne Unit A versus TAVE

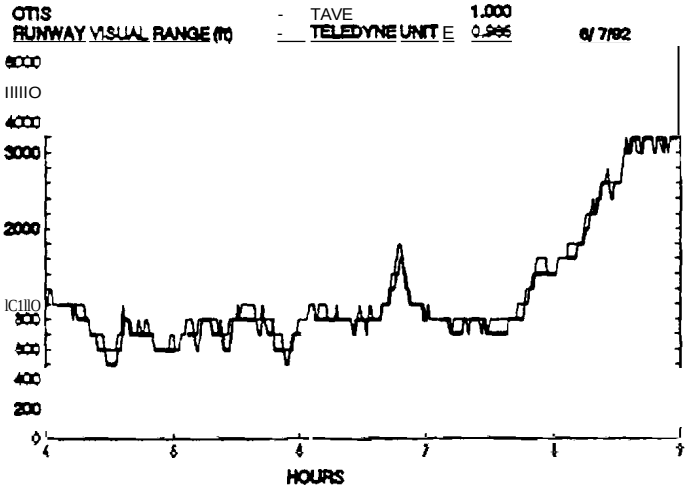

Figure 13. RVR: Teledyne Unit E versus TAVE

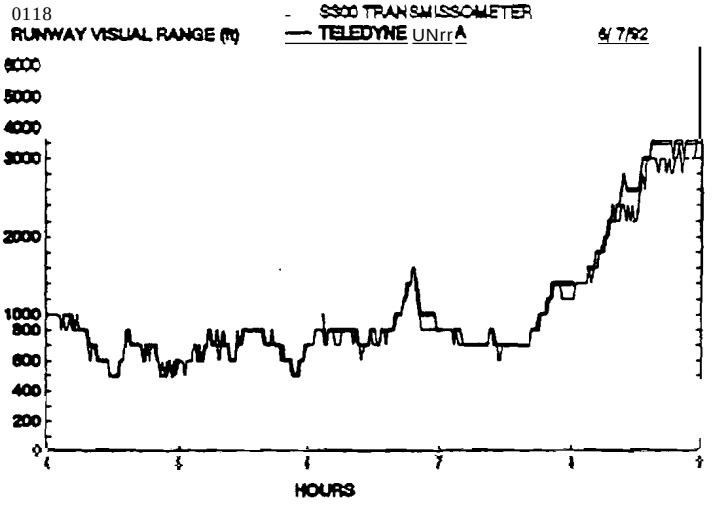

Figure 14. RVR: Teledyne Unit A versus 5300

backscatter. A window factor is applied to the raw window signal data to convert it into a percentage correction factor (saved in integral units of 0.5 percent correction) to be applied to the raw measured extinction coefficient. In the original finnware configuration, the σ value was declared "missing" if the nominal correction becomes larger than 8.5 percent (17 in storage units). The original recommended window factor relating the σ correction to raw window signal was 0.42.

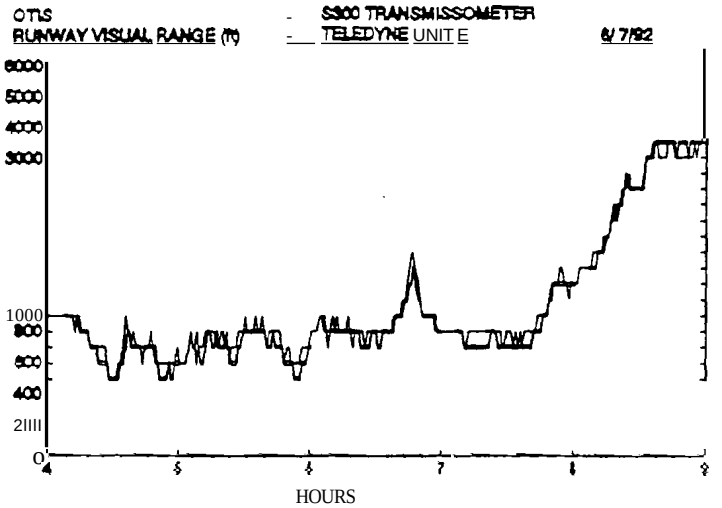

Figure 15. RVR: Teledyne Unit E versus 5300

Since the Otis windows have been cleaned regularly, data from the airport test sites must be used to assess compliance with this specification. The Otis standard calibrator was measured in the Sea-Tac (2/28/92) and Bangor sensors (4/21/92) before and after cleaning. The results are shown in Table 15. The window corrections were too small to give accurate measurements for dirty windows, as indicated by the large differences in calibrator measurement before and after cleaning in Table 15. The window corrections were recalculated using a factor of three larger correction; the results are listed in the second row from the bottom.in Table 15. This change produced reasonable agreement between the calculated σ for dirty windows and the σ for clean windows. The factor of three increase corresponds to increasing the window factor from 0.42 to 1.26. With this increase the three-month maintenance interval should be easily met. factor 0.95 was used at Bangor for the data of Figure 10.)

TABLE 15. Airport Sensor Measurement of Calibrator *SIN 0004*

	Sea-Tac			Bangor		
Parameter	Touch Down	Mid Point	Roll Out	Touch Down	Mid Point	Roll Out
Before Cleaning						
Window Signals (0.5% a corL)	10	10	16	6	7	6
Calibrator a km^{01}	48.0	50.5	47.0	58.7	62.6	60.1
After Cleaning						
Window Signals (0.5% a corr.)	0	0	1	1	1	1
Calibrator σ km^{01}	53.0	58.0	53.5	61.9	67.3	63.7
Increase window correction by a factor of three						
Calculated Dirty σ km^{01}	52.6	55.3	53.5	61.6	66.3	63.0
Compute σ correction factor for sensors to give *SIN* 0004 σ = 65.5 km^{01}						
Correction factor	1.235	1.129	1.224	1.058	0.973	1.028

The measurement of the Otis calibrator at the two airport sites pennits a common calibration to be used for all test sites. The last line of Table 15 shows the σ correction factor needed to give the airport Teledyne sensors the same calibration as those at Otis. The Sea-Tac units had a significantly different calibration from the Otis units, but the Bangor units had about the same calibration as the Otis units. (Remember that these original calibrations were done before the scattering plates were recalibrated and the calibration finnware changed.) These factors do not appear to be consistent with the airport data in Tables 1 and 2. Some of the difference, however, may be due to the incorrect window factor, which would result in low σ readings. The full report will further examine this apparent inconsistency.

3.2 WET WINDOW SIGNALS

When snow or rain blow onto the Teledyne sensor windows, large window signals (e.g., 80 units with the 0.42 window factor) are generated. These large signals not only triggered missing data reports, but also exceeded the RMM hardware limits for the sensors and caused the sensors to shut down (e.g., for two hours on 1/16/92).

The firmware was modified to permit operation of the sensor with no window corrections, but with a nominal window factor of 0.30. Large window signals of 55 (0.5% units) were observed in snow at 5t Johns with this window factor. If the 1.26 window factor were adopted, this window signal would trigger a calibration correction of over 100 percent. In fact, however, these wet windows were observed to give no measurable error in the extinction coefficient. Thus, wet windows have totally different characteristics from dirty windows. Sometimes large window signals are, however, associated with a loss in sensor response (e.g., the snow clogging discussed in Section 3.3.3).

The wet window problem does not cause a basic sensor error, but does cause the compensation algorithm to apply the wrong correction. This problem is being resolved by a modification in the window contamination algorithm which distinguishes a sudden change caused by water droplets from the slow changes caused by window dirt buildup. The algorithm will also distinguish the variable signals from water droplets from the fIXed signals related to snow clogging. Teledyne will develop this algorithm using data from Otis and St. Johns; it will then be tested at Otis.

3.3 SNOW

3.3. 1 *RVR in Snow*

A review of the Otis and 51. Johns data showed that, apart from "white out" conditions of blowing snow, the MOR in snow is always above 1000 feet. Figure 16 shows the distribution of MOR in snow at Otis during the recent winter test period. The MOR bins are labeled by the middle of the bin and are logarithmically distributed. The MOR in snow was rarely below 1500 feet. A review of data from the most severe recent "noreaster" at Otis (February 1990) showed a minimum MOR of 1160 feet.

The relationship between RVR and MOR depends upon the ambient light and runway light intensity. Figures 17-20 show this relationship for the new generation RVR system for MOR above 1000 feet. Each reporting value of RVR corresponds to a range of MOR. Thus the plot of RVR versus MOR looks like a staircase.

Figure 17 shows the relationship for an ambient light of 0.5 Ft-Lamberts, which is the value for night. In this case the RVR is much greater than the MOR for light settings 3 to 5; for MOR ≥ 1000 feet and LS 5, the minimum value of RVR is 2800 feet. Thus, at night snow will never reduce the RVR to operational minimums (highest minimum is 2400 feet for Category I runway). (Note that, at night the RVR is defined as zero for light settings 0 to 2.)

Figures 18 to 20 show the daytime RVR for three values of ambient light, 200, 1000 and 2000 Ft-Lamberts,

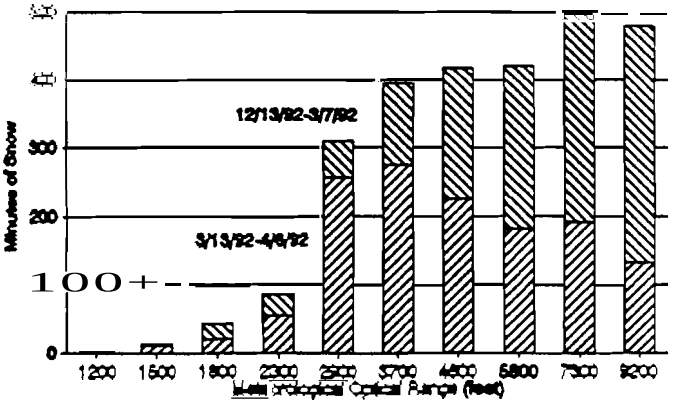

Figure 16. Distribution of MaR in Snow at Otis

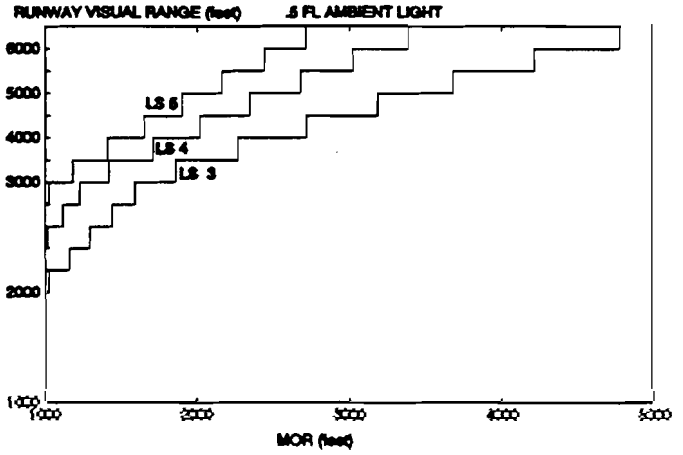

Figure 17. RVR vs. MaR: Ambient Light 0.5 Ft-Lmb (Night); Runway Light Settings 5, 4 and 3.

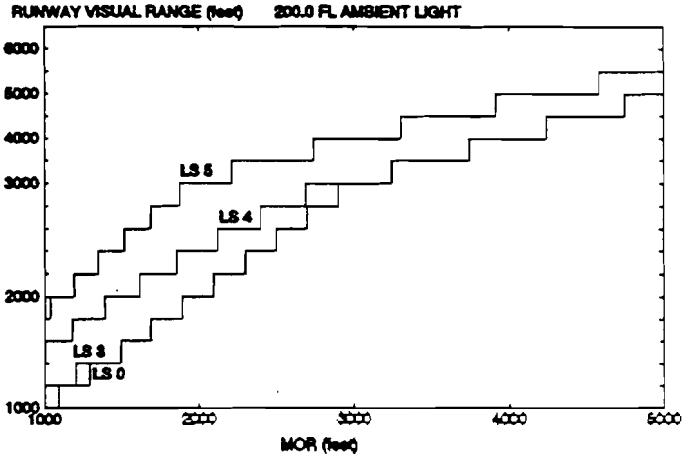

Figure 18. RVR vs. MaR: Ambient Light 200 Ft-Lmb; Runway Light Settings 5, 4, 3 and 0

respectively. As the ambient light the runway lights become relatively less visible than the runway markings. For LS 0 and LS 3 the RVR is essentially the same as the MOR. For ambient light values of 1000 and 2000 the RVR for LS 4 also approaches the value of MOR. In contrast to the night values in Figure 3, the daytime RVR can drop below the 2400-foot minimum for LS 5; the values of MOR for this RVR value are about 1300, 1700 and 1900 feet for ambient light of 200, 1000 and 2000, respectively.

The Otis data were examined to determine what ambient light levels occur during snow. Table 16 shows the two limiting cases found. Only in the second case would the RVR just be reduced below the 2400-foot minimum.

One must therefore conclude that the RVR values are significant in snow only under the worst snow conditions and the highest RVR operational minimums. Thus, the snow performance of an RVR visibility sensor is less significant than its fog performance.

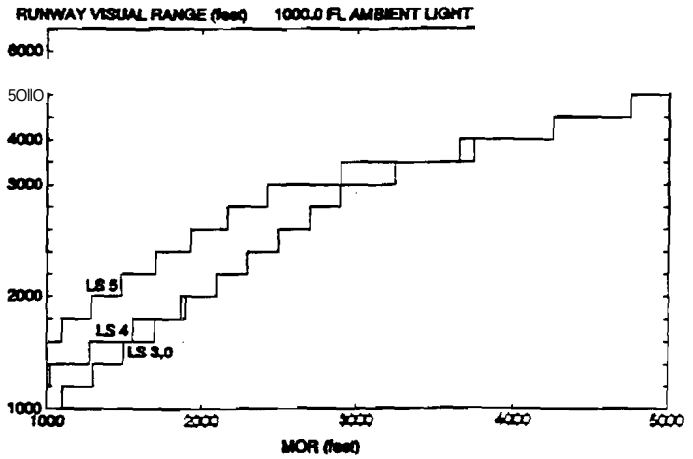

Figure 19. RVR vs. MOR: Ambient Light 1000 Ft-Lmb; Runway Light Settings 5, 4, 3 and 0

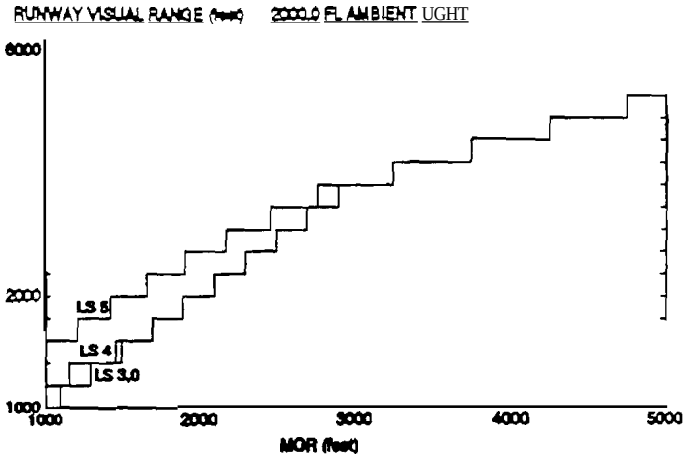

Figure 20. RVR vs. MOR: Ambient Light 2000 Ft-Lmb; Runway Light Settings 5, 4. 3 and 0

TABLE 16. Ambient Light Level in Heavy Snow

	Time (Local)	MQR (Minimum)	Ambient Light (Maximum)
3/19/92	1200	2500 ft	2000 FL
3/21/92	1340	1600 ft	1000 FL

3.3.2 Snow Response

Table 8 lists the MOR limits used to determine a sensor's snow calibration. The lower limit for snow (1037 feet) is set to include all observed data. The upper limit for snow (10,375 feet) extends slightly above the RVR range (6000 feet) to include more data points. Table 17 shows the number of snow data points for the two calibration periods. As for fog, data were rejected if the two crossed transmissometers m00 and T500) disagreed by more than 10 percent. This criterion removes data where one of the transmissometers is partially blocked by snow.

TABLE 17. Unit A Snow Data Points

Reference	Period 1	Period 2
Unit C	388	849
TAVE	562	1180
5300	565	1193

Table 18 shows the snow results for intercomparison of the three Teledyne sensors in snow. In contrast to the fog data (Table 13), the snow data show much larger spreads (which are similar for both Units A and B). One source for this spread is the random number of snow flakes measured by each sensor during the one-minute average. The spread is less for the second period and the Unit B data show a drop of about six percent in the median response.

TABLE 18. Intercomparison in Snow

Reference	Period	Unit A	Unit B
Unit C			
Median	1	1.012	1.062
	2	1.014	1.001
50% Δ	1	0.126	0.133
	2	0.099	0.129
90% Δ	1	0.320	0.391
	2	0.266	0.329

Table 19 shows the sensor calibration for the two data periods, using both TAVE and S3OO. As in Table 18, Unit B shows a drop in median calibration (roughly ten percent) from the first to the second periods. Unit B suffered from partial blockages during the second period; the blockages cannot account for the reduction in median value since a blockage would increase the median.

The transmissometer calibrations in Table 19 show a significantly larger spread than the sensor intercomparison in Table 18. This additional spread is may be due to variations in the inherent snow response of the Teledyne sensor relative to the reference transmissometers. Some spread may also be caused by the fact that the one-minute averages for the two types of sensors are not precisely synchronized and time variations can be rapid in snow.

Table 19 shows the ratio of the median snow calibration to the median fog calibration (Table 10) for the first period. The median snow calibration ratio is about 30 percent larger than the fog calibration ratio, except for the anomalous response of Unit B in Period 2.

The data from the first period generally showed little variation in median or spread with the value of MOR. In the data from the second period, although having less overall

spread, showed systematic variations with MOR, most notably for Units B and C with TAVE. This difference may simply be due to a correlation between MOR and snow characteristics for the second period, but not the first. In this case it may be more appropriate to restrict the snow calibration study to the RVR range of MOR rather than using the extended range shown in Table 8.

TABLE 19. Snow Calibrations

Reference	Period	Unit A	Unit B	Unit C
TAVE				
Median	1	1.263	1.344	1.245
	2	1.224	1.205	1.213
50% Δ	1	0.183	0.233	0.190
	2	0.156	0.166	0.165
90% Δ	1	0.501	0.535	0.525
	2	0.425	0.491	0.430
5300				
Median	1	1.335	1.419	1.319
	2	1.317	1.294	1.313
50% Δ	1	0.265	*0.342*	0.301
	2	0.211	0.204	0.211
90% Δ	1	0.756	0.832	0.822
	2	0.670	0.603	0.606
		Snow/Fog Median Ratio		
TAVE	1	1.291	1.306	1.293
	2	1.272	1.154	1.281
5300	1	1.311	1.322	1.311
	2	1.321	1.195	1.336

3.3.3 Snow Blockage

Snow clogging was at both Otis and St Johns. The primary method for detecting snow clogging was the examination of the ratio of the extinction coefficient by the two (St Johns) or three (Otis) Teledyne sensors at the site. Since the snow effects are directional and each sensor had a different orientation, usually only one sensor was affected by the snow. In the most severe conditions at St Johns both sensors were affected and the response loss was determined by comparison with the Belfort forward-scatter sensors which had a "look-down" scattering geometry and were unaffected by the snow. Table 20 shows lists the snow clogging events which were identified after screening about half of the recorded snow data at both test sites.

Table 20 lists the temperature and wind conditions during the events and the sensors that were affected, either by a loss in extinction coefficient response (Max Loss column) or by large window signals (Window Signals? column). The pointing directions of the sensor receiver and transmitter heads are listed. In most cases the largest effect was noted for the head pointing into the wind. In some cases the clogging was signaled by a consistent window signal; in significant clogging produced no enduring window signal.

The most serious clogging (100% loss) was observed under "white out" conditions of blowing snow *(3/1191* and *312192)* with high winds and low temperatures. Sensors not pointing directly into the wind were also affected under these conditions. Serious clogging was also noted at higher temperatures close to freezing *(417/92).*

TABLE 20. Teledyne Snow Clogging Events: Sensors Affected

Date	Site	TemDereture	Wind Speed	Wind	Comments	
2/2992	Otis	28-30° F	20 Kts	350°		
SensQr	Max loss	Duration	R Angle	TAngle	Window Signals1	Comments
#2	35%	1 hrs	28°	242°	R max = 35	
#3	None		343°	197°	R max = 40	
3/1/92	5t Johns	9·14°F	33 Kts	270°	White Out	
Sensor	Max Loss	Duration	R Angle	TAngle	Window Signals1	Comments
#1	50%	3 hrs	360°	215°	T/A max = 10	Short window signals
#2	100%	6 hrs	30°	245°	T fixed = 23	
3/2/92	5t Johns	7-9° F	30-35 Kts	280°	White Out	
Sensor	Max Loss	Duration	R Angle	TAngle	Window Signals1	Comments
#1	50%	3 hrs	360°	215°	R Δ max = 10	Short window signals
#2	90%	6 hrs	30°	245°	T fixed = 23	
3/21 92	Otis	28° F	18 Kts	20°		
Sensor	Max Loss	Duration	A Angle	TAngle	Window Signals7	Comments
#2	20%	2 hrs	28°	242°	R max = 50	
#3	None		343°	197°	R max = 25	
3/31 92	Otis	39° F	16 Kts	20°		
Sensor	Max Loss	Duration	A Angle	TAngle	Window Signals	Comments
#2	20%	2 hrs	28°	242°	A max = 40	
4/7/92	St Johns	28.30° F	20·301 Kts	360°	Wind Sensors Clogged	
Sensor	Max Loss	Duration	R Angle	TAngle	Window Signals?	Comments
#1	100%	>9 hrs	360°	215°	R max = 90	Excess scattering also
#2	None		30°	245°	R max = 40	

R = Receiver, T = Transmitter
Window Signals are for a window factor of 0.30.

4. CONCLUSIONS AND RECOMMENDATIONS

The test results raised a number of issues that have had to be resolved before system deployment. Each issue will be examined in tum and the predeployment activities needed to reach a satisfactory resolution will be outlined. In some cases postdeployment activities will be required to optimize system perfonnance or to verify system under rare operational conditions. The test results offer promise that the Teledyne visibility sensor perfonnance can be significantly improved by a redesign of the sensor head. Recommendations for developing and testing a retrofit modification will be presented.

4.1 CALIBRATION ACCURACY

4. 1. 1 *Predeployment Activities*

The original Teledyne sensor calibrations were off by 20%-30% when compared to airport transmissometers. An accurate fog calibration was obtained for five Teledyne sensors at Otis which were calibrated with the primary Otis calibrator *(SIN* 0004). An overall variation of 11.8 percent was observed, a small part of which may be due to calibration inaccuracies and the rest to manufacturing variations (see Section 4.3). The middle calibration between the two extreme sensors (Unit C and Unit E) is now used by Teledyne to set the final calibration for the field calibration plates. This choice will minimize the deviations from the actual fog calibration for the observed sensor variations. The primary Otis calibrator *(SIN* 0004) and two of the sensors calibrated at Otis have been returned to Teledyne to be used in the calibration process.

4. 1.2 *Future Activities*

Accurate fog calibrations will have to be determined for the new scattering geometry proposed in later sections to improve sensor perfonnance.

4.2 CALIBRATION STABILITY

4.2.1 Predeployment Activities

The original sensor calibration firmware gave inconsistent results at Otis. New test calibration firmware was developed that gives consistent results. However, the cause of the calibration variation was not identified and hence could possibly reappear in the production finnware versions. Data using the original finnware also indicated different fog responses at Bangor and Otis. Data using the current firmware gives consistency to a few percent for the same sensor at Bangor and Otis. The calibration stability of the final operational finnware is being verified in fog events at Bangor and Otis.

4.2.2 Future Activities

The Teledyne RVR system at Otis will continue to use the operational finnware and thereby

provide an operational bed.

4.3 PRODUCTION CONSISTENCY

4.3. 1 *Predeployment Activities*

The calibration consistency of forward-scatter sensors depends upon production quality control over the optics beam width and alignment. As discussed in Section 4.1, five different Teledyne sensor units were calibrated in fog at Otis. This relatively small sample gave a calibration consistency (using the same calibrator) of +6%, which is barely within the RVR specification limits of +7%. This result shows that the Teledyne sensors can meet the specification, but with no margin for reduced production precision. Consequently, Teledyne has set up a procedure for selecting sensors from the production line and sending them to Otis for fog testing to verify production consistency.

4.3.2 Discussion

The differences between calibrator response and fog response can be viewed as a lack of overlap of the transmitter and receiver beams at the location of the calibrator. If the beams are misaligned, the calibrator signal will be relatively smaller than the volume scattering froni fog since, although the beams may not overlap at the plate, they will eventually overlap at some point in space. Since the calibrator is used to set the system gain, the gain for a misaligned sensor will be set too high and its fog (] response will be too large. This effect has been confinned by detailed sensor simulations which will be included in the final report on this work. This direction of error was also noted in the HSS sensors tested some time ago at Sea-Tac, where one of the sensors had too wide a transmitter beam.

This understanding of geometry errors indicates that Units D and E are more accurately aligned than Units A and C, which would have a similar amount of misalignment (see Table 11). Unit B is more Units D and E than like Units A and C. The decision (Section 4.1.1) to use the middle calibration between Units E and C would give similar errors for a well aligned instrument and one with a typical amount of misalignment.

4.3.3 Future Activities

Teledyne plans to determine the causes for the variation noted in the five sensors tested at Otis, in order to improve their production quality control procedures.

The effects of manufacturing errors on sensor calibration consistency may be mitigated by the following efforts:

1) Development of sensor designs that are less affected by errors in scattering geometry.

2) Development of better calibration methods that may be used to verify sensor geometry at the factory or in the field without lengthy testing.

4.4 WINDOW CORRECTION FACTORS

4.4.1 Predeployment Activities

Data from Bangor and Sea-Tac showed that the window contamination correction factors originally recommended by Teledyne were a factor of three too small. Larger default correction factors will be used in the future. Teledyne has incorporated the capability of measuring window signals into the calibration firmware.

4.4.2 Future Activities

The sensor calibration procedure will be modified to collect window signal data from which site-dependent window contamination factors can be determined.

4.5 WET WINDOW SIGNALS

4.5. 1 *Predeployment Activities*

Large window signals are generated whenever water droplets form on the windows from blowing rain or snow. In to contamination producing similar window signals. the droplets do not significantly affect the sensor calibration. With the original *SIB* firmware the large water droplet signals caused the sensor to shut down; new firmware temporarily solved the problem by not processing window signals. Teledyne has completed an algorithm that distinguishes window contamination from water droplets and corrects the extinction coefficient only for the window contamination.

4.5.2 Future Activities

The parameters of the Teledyne window signal algorithm will be optimized by using it to process the data recorded at Otis and St Johns. The performance of the algorithm will also be monitored at Otis.

Changes in sensor geometry may reduce the effects of wet windows. The "look-down" scattering geometry, which should reduce snow clogging (Section 4.6.2), may also prevent water droplets from collecting on the windows. If not, changing the scattering angle of the window backscatter sensing might reduce the size of the droplet signal relative to the contamination signal.

4.6 SNOW BLOCKAGE

4.6. 1 *Predeployment Activities*

The Teledyne sensors were observed to lose sensitivity because of beam blockage under a variety of snow conditions. In some cases the blockage was *not* indicated by a large window backscatter signal. The new Teledyne window signal algorithm (Section 4.5.1) distinguishes

window snow clogging from water droplets and contamination; the sensor is disabled when snow clogging is detected. FAA operational personnel are familiar with the problem of snow clogging which also affects the existing Tasker transmissometers. They can therefore take appropriate action in the event that the Teledyne window signal algorithm does not detect a clogged condition. They will be made aware, however, of the difference in the symptoms of snow clogging for the Tasker and Teledyne sensors: lower RVR forTasker, usually higher RVR for Teledyne.

4.6.2 Discussion

The Teledyne sensor appears to be susceptible to two types of snow clogging:

1) Snow blowing directly onto a window causes blockage which reduces the scattered signal. The Teledyne window heating appears to sufficient to prevent this fonn of clogging except a) under high wind conditions (e.g., 30 knots) at temperatures below 14 degrees F or b) for long durations of snow exposure. Since snow clogging is dependent upon the wind direction and speed, the snow rate and the temperature, it is difficult to compare the snow clogging of one sensor type to another. Nevertheless, the Teledyne sensor appeared to handle the direct clogging better than the other forward-scatter sensors (and transmissometers) with horizontal pointing optics.

2) Snow blowing onto the unheated portions of the window hood interior can build up horizontally into the light beam; this fonn of clogging may take longer to develop than 1) and is likely to occur just below freezing. This form of clogging may either reduce the sensor response or lead to large double-scatter signals that are independent of the actual extinction coefficient.

The distinction between these two types of clogging becomes less well defined under highly turbulent conditions where may impinge on all portions of the sensor.

4.6.3 Future Activities

The parameters of the Teledyne window signal algorithm will be optimized by using it to process the snow clogging data recorded at Otis and St Johns. The performance of the algorithm will also be monitored at Otis during the winter of FY93.

The Teledyne sensor yoke design should be changed to a "look-down" geometry which has proven (Belfort visibility sensor) to be resistant to snow clogging. The hood design will also have to be changed for satisfactory operation in the look-down geometry. Prototypes of the new scattering geometry should be obtained for testing during the winter of FY93.

4.7 HIGH RVR IN SNOW

4.7. 1 *Predeployment Activities*

The Teledyne sensor reads systematically high RVR values in snow (about 30% high when runway lights are oft). Since systematically high RVR values are undesirable, Teledyne has modified the sensor calibration to increase the extinction coefficient σ by 20% when snow is likely (σ < 10 lan-I and the SIB temperature is below 40° F). This correction will compensate the unconservative Teledyne snow readings at the price of giving more conservative readings during cold, light fog.

4. 7.2 *Discussion*

The heaviest snow events at Otis during the last three years had maximum σ of 8.5 kIn-I. Similarly, the snow events recorded at St Johns had σ below 10 lan-I except for very short periods or when blowing snow "white out" conditions occurred. The σ value under the latter conditions reached as high as 50 kIn-I. Since "white out" conditions are rare and also pose other hazards to aviation, it is recommended that a correction for snow calibration be made only when σ is below 10 lan-I (MOR above 984 feet).

The Teledyne field electronics unit (SIE) measures its internal temperature which is slightly above ambient. Since snow is rare above 40 degrees F, the snow correction is carried out only whenever the SIB temperature is 40 degrees F or less.

4.7.3 Future Activities

The proper operation of the Teledyne snow algorithm will be checked at Otis during the winter of FY93.

Sensors with larger scattering angles (e.g., 45° rather than 35°) show better calibration agreement for fog and snow; the best scattering angle, however, has not been determined. The scattering angle of the Teledyne sensor should be increased. This change can be combined with the "look-down" geometry discussed in Section 4.6.3. Prototypes of the new scattering geometry with several different scattering angles should be obtained for testing during the winter of FY93.

4.8 RVR ACCURACY SPECIFICATION

Section 3.1 showed that the Teledyne sensors at Otis meet FAA RVR accuracy specification. Some difficulty was encountered in dealing with the rain part of the specification because of the infrequency of rain reducing the extinction coefficient into the RVR region (σ > 1.5 Jan-I) and the relative insensitivity of the rain detector to rain mixed with fog. Note that in rain (but not snow) the Teledyne sensors fell short of the RVR accuracy requirements, but the contribution of rain to the overall performance evaluation was too small to .cause the sensors to fail the acceptance criteria. The errors in rain are in the

conservative direction, Le., RVR too low.

A number of changes should be considered for the accuracy requirements in future revisions of the RVR system specification:

1) The greatest difficulty in meeting the RVR accuracy specification occurred under conditions when the RVR would have been greater than 3000 feet *(0'* < 3 lan-I). Since this region is not of the greatest operational concern, it may be worthwhile to revise the RVR accuracy specifications to require greater emphasis on lower values of RVR and less emphasis on rain.

2) As written, the RVR accuracy requirements permit significantly greater fractional errors in the unconservative direction (higher RVR, as noted in snow for the Teledyne sensor) than in the conservative direction (lower RVR, as noted in rain for the Teledyne sensor). A symmetrical fractional error criterion would probably make more sense.

REFERENCES

1. Tonna, G. and Shifrin, K. S., "Reliability of the Polar Nephelometer for the Measurement of Visibility in Fog," *Applied Optics,* Vol. 31, No. 15, 20 May 1992, pp 2932-2941.

2. Burnham, D.C., "High Visibility Measurements and Reference Standards," Seventh Symposium on Meteorological Observations and Instrumentation, American Meteorological Society, January 14-18, 1991, pp 332-337.

3. Department of Transportation, Federal Aviation Administration, Specification, Runway Visual Range System, FAA-E-2772

4. Burnham, D.C., 'Evaluation of Visibility Sensors at the Eglin Air Force Base Climatic Chamber,' Report No. *DOT/FAA/PM-83/29*. October 1983, DOT Transportation Systems Center, Cambridge MA.

5. Burnham, D.C. and Collins, D.F., Jr., "AWOS Sensor Evaluation: Transmissometer, Forward-Scatter Meter and Lidar Ceilometer," Report No. *DOT/FAA/PM-83/20,* January 1984, DOT Systems Center, Cambridge MA.

6. Schwartz, D. and Burnham, D., "Otis ANGB Visibility Field Test Study," Report No. AFGL-TR-86-001l(I), February 1987, Air Force Geophysics Laboratory, Hanscom Air Force Base MA.

7. Burnham, D.C. and Schwartz, D., "Otis RVR Performance of Forward-Scatter Visibility Sensors: Handar Commercial Sensor and Sensors from Other Manufacturers," October 1991.

8. Griggs, D.J., Jones, D.W., Ouldridge, M. and Sparks, W.R., "The First WMO Intercomparison Of Visibility Measurements, United Kingdom *1988/1989,"* Final Report *WMO/TD* - No. 401.

9. Burnham, D. *C.,* "Rain Response of Forward-Scatter Visibility Sensors," Fifth Symposium on Meteorological Observations and Instrumentation, American Meteorological Society, April 11-15, 1983, pp 102-104.