CT-TN 95/63

FEDERAL AVIATION ADMINISTRATION
TECHNICAL CENTER LIBRARY
ATLANTIC CITY INT'L ARPRT, NJ 08405

COPY 3

technical note

Terminal Doppler Weather Radar (TDWR) Operational Test and Evaluation (OT&E) Integration and OT&E Operational Final Report

Radame' Martinez
Tai Lee

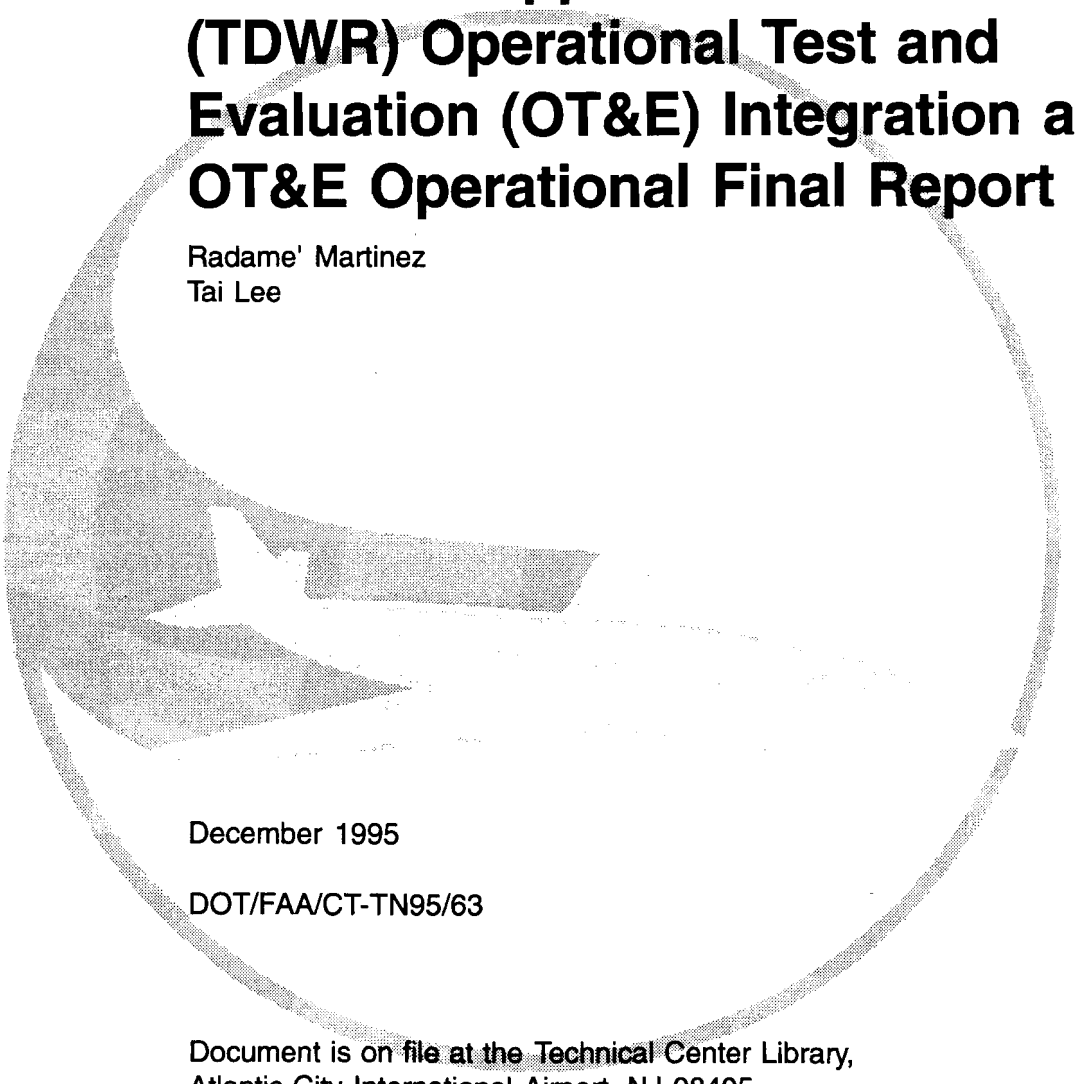

December 1995

DOT/FAA/CT-TN95/63

Document is on file at the Technical Center Library,
Atlantic City International Airport, NJ 08405

U.S. Department of Transportation
Federal Aviation Administration

Technical Center
Atlantic City Airport, NJ 08405

DOT/FAA
CT-TN
95/63
c. 3

FAA TECHNICAL CENTER LIBRARY
00015443

DOT/FAA Martinez, Radame'
CT-TN Terminal doppler weather
95/63 radar (TDWR) operational
c. 3 test and evaluation (OT&E)

FAA
TECHNICAL CENTER
Atlantic City, N.J.

NOTICE

This document is disseminated under the sponsorship of the U.S. Department of Transportation in the interest of information exchange. The United States Government assumes no liability for the contents or use thereof.

The United States Government does not endorse products or manufacturers. Trade or manufacturers' names appear herein solely because they are considered essential to the objective of this report.

Technical Report Documentation Page

1. Report No. DOT/FAA/CT-TN95/63	2. Government Accession No.	3. Recipient's Catalog No.
4. Title and Subtitle Terminal Doppler Weather Radar (TDWR) Operational Test and Evaluation (OT&E) Integration and OT&E Operational Final Report		5. Report Date December 1995 6. Performing Organization Code
7. Author(s) Radame' Martinez and Tai Lee; Peter Guthlein, Dimensions International, Inc. (DI); Steve Viveiros, Donne Wedge, Science Applications International Corporation (SAIC).		8. Performing Organization Report No. DOT/FAA/CT-TN95/63
9. Performing Organization Name and Address U.S. Department of Transportation Federal Aviation Administration Technical Center Atlantic City International Airport, NJ 08405		10. Work Unit No (TRAILS) 11. Contract or Grant No.
12. Sponsoring Agency Name and Address U.S. Department of Transportation Federal Aviation Administration Technical Center Atlantic City International Airport, NJ 08405		13. Type of Report and Period Covered Technical Note 14. Sponsoring Agency Code
15. Supplementary Notes		

16. Abstract

This document is the Final Report for Operational Test and Evaluation (OT&E) Integration and OT&E Operational testing of the Terminal Doppler Weather Radar (TDWR). It provides a complete account of the results of OT&E testing as well as recommendations for future considerations.

This report contains a description of testing and evaluation activities including location, participants, specialized test equipment used during testing, test objectives/criteria, test descriptions, test results, and methods used for data collection and analysis.

This report also contains a comprehensive discussion of overall test results. Finally, the report ends with test conclusions and recommendations to improve system performance.

17. Key Words Terminal Doppler Weather Radar (TDWR) Low-Level Wind Shear Alert System (LLWAS) Operational Test and Evaluation (OT&E) Windshear Microburst Gust Front	18. Distribution Statement Document is on file at the Technical Center Library, Atlantic City International Airport, NJ 08405

19. Security Classic. (of this report) Unclassified	20. Security Classic. (of this page) Unclassified	21. No of pages 81	22. Price

TABLE OF CONTENTS

		Page
EXECUTIVE SUMMARY		vii
1.	INTRODUCTION	1
	1.1 Purpose	1
	1.2 Scope	1
2.	REFERENCE DOCUMENTS	1
	2.1 Federal Aviation Administration (FAA) Documents	1
3.	SYSTEM DESCRIPTION	4
	3.1 Mission Review	4
	3.2 Test System Configuration	5
	3.3 Interfaces	7
4.	TEST AND EVALUATION DESCRIPTION	11
	4.1 Test Schedule and Locations	11
	4.2 Participants	11
	4.3 Test and Specialized Equipment	12
	4.4 Test Objectives/Criteria	13
	4.5 Testing Descriptions	15
	4.6 Data Collection and Analysis Method	16
5.	RESULTS AND DISCUSSION	16
6.	CONCLUSIONS	16
	6.1 Reliability	16
	6.2 Low-Level Wind Shear Alert System (LLWAS) II	17
	6.3 Low-Level Wind Shear Alert System (LLWAS) III	17
	6.4 Safety	17
	6.5 Weather-Related Issues	17
	6.6 Adaptation	17
	6.7 Service Reports	17

7. RECOMMENDATIONS 18
7.1 Reliability 18
7.2 Low-Level Wind Shear Alert System (LLWAS) II 18
7.3 Low-Level Wind Shear Alert System (LLWAS) III 18
7.4 Safety 18
7.5 Weather-Related Issues 18
7.6 Adaptation 19
7.7 Service Reports (SR) 20

8. ACRONYMS AND ABBREVIATIONS 20

APPENDIXES

A - Reference Data
B - TDWR Test Activities
C - TDWR Test Verification Requirements Traceability Matrix (TVRTM)

LIST OF ILLUSTRATIONS

Figure		Page
3.2-1	TDWR External Interfaces	6
3.3.1-1	TDWR--LLWAS II Interface	8
3.3.2-1	TDWR--LLWAS III Interface	9
3.3.3-1	TDWR--MPS and TDWR--MDT Interfaces	10

EXECUTIVE SUMMARY

This report presents the results of the National Airspace System (NAS) Operational Test and Evaluation (OT&E) of the Terminal Doppler Weather Radar (TDWR). The TDWR is a C-band pencil beam doppler weather radar with a narrow beam width (0.5°), high sensitivity, optimized for detection of hazardous weather in the airport terminal area. It provides the capability for the detection, processing, and communication of hazardous weather information to air traffic controllers and pilots.

In addition to the OT&E activities of ACT-320, the TDWR underwent a series of Shakedown tests performed by AOS-250 and Remote Maintenance Monitoring System (RMMS) tests by ACT-330. Those activities are covered in separate reports.

The ACT-320 OT&E activities took place incrementally at a number of different locations. Appendix A, table A-1, TDWR Test Activities, outlines the time and place of each of these test increments, referred to as Test Activities, TA1 through TA10.

Initial OT&E of the TDWR system took place at Oklahoma City during August through October 1992 (TA1). Due to deficiencies found in the system, the OT&E testing was not successfully completed. In addition air traffic control (ATC) evaluation had to be postponed due to a lack of appropriate convective weather and because the unresolved system problems would render the TDWR unreliable for ATC use.

A follow-up Weather Performance Test was conducted at Oklahoma City during April through May 1993 (TA2) to evaluate various Weather Performance Improvements as well as other system corrections. Even though many Weather Performance and system improvements were noted, several important issues remained unresolved.

An OT&E Operational Re-Test was conducted at Houston in April through May 1993 (TA3). This was basically a regression test to determine progress in resolving problems uncovered in TA1 and TA2. Unfortunately, several key issues, particularly those involving system reliability, remained unresolved. During this same period, a software enhancement known as "Build 4+" was also evaluated. This patch enabled Low-Level Wind Shear Alert System (LLWAS II) Center Field Wind (CFW) data to be displayed on the TDWR Ribbon Display Terminal (RDT).

The Reliability Re-Test and ATC evaluation was conducted in Memphis during August through September 1993 (TA4). In spite of the fact that the Reliability Issue still remained open, the ATC evaluation was successfully completed.

A Reliability Re-Test was again conducted in Memphis during February through March 1994 (TA5). Although a significant

improvement was noted, problems with the Harris computer caused an unsatisfactory Mean Time Between Failures (MTBF) and Mean Time Between Critical Failures (MTBCF).

An OT&E of the Build 5A Upgrade (TDWR/LLWAS II Integration) was conducted at Memphis during April 1994 (TA6). This test indicated that the LLWAS II Integration was successfully accomplished with no degradation to the TDWR system. There was however, a sensor mapping problem which is explained in detail in appendix B and Service Report (SR) IAH94-001. An ATC evaluation was conducted to assess the operational impact of the Build 5A Upgrade.

A Checkout of the Build 5B Upgrade (TDWR/LLWAS III Integration) was conducted at Denver in January 1995 (TA7). This test was designated a Checkout rather than an OT&E because of the unique configuration at Denver. It did however, provide an insight into the system performance for a large scale LLWAS III site.

An OT&E of the Build 5B Upgrade for an LLWAS II site was conducted at Kansas City in January 1995 (TA8). This test indicated that the Build 5B Upgrade was accomplished with no degradation to the TDWR System, however, the sensor mapping problem remained.

ACT-320 was requested to conduct a regression test at Denver to assess the effect of a software fix designed to minimize the impact of a anomaly discovered in the January 95 test. This test was conducted in April 1995 (TA9).

An OT&E of the Build 5B Upgrade for an LLWAS III site was conducted at Orlando in May 1995 (TA10). This test, in conjunction with the LLWAS II site test in Kansas City (TA8) constituted the full OT&E of the TDWR Build 5B baseline.

Whenever anomalies were encountered during OT&E testing, SRs were written describing the event and the circumstances surrounding it. (See tables A-4 and A-5.) Presently, there are 35 ACT-320 generated SRs that remain open. ACT-320 recommends that AND-420 develop a plan for the resolution of these SRs.

Although the sequence of these tests was not as originally planned, ACT-320 demonstrated the necessary flexibility to adjust according to system availability and mission requirements. Problem resolution has been a high priority for ACT-320, AND-420, and AOS-250 and this is reflected in the present product. The Build 5B Baseline represents a dramatic improvement in terms of stability and reliability over the product tested in Oklahoma City (TA1). Those problems that remain will be discussed in the body of this report. Due to weather and resource considerations, the final Weather Performance testing has not yet been accomplished. A supplement to this report will be provided when Weather Performance results are available.

1. INTRODUCTION.

1.1 PURPOSE.

The purpose of this report is to document test results from Terminal Doppler Weather Radar (TDWR) Operational Test and Evaluation (OT&E) Integration and OT&E Operational tests, conducted from 1992 to present, including TDWR Baseline Operational Test and Evaluation (OT&E) testing and TDWR Build 5A and 5B OT&E testing.

This report also presents conclusions and makes recommendations for this project.

1.2 SCOPE.

This report provides background information on the TDWR system, and contains a comprehensive description of all OT&E activities, including test objectives, participants, locations, dates, data collection and analysis methods, and test results.

This report describes an incremental series of tests that were conducted between August 1992 and May 1995 on the TDWR. A summary of the Test Activities which took place incrementally at a number of different locations, is provided in appendix A, table A-1. A list of participating organizations along with their functional contributions is provided in appendix A, table A-2. Data collection and analysis methods as well as test results are provided in appendix B.

This report also contains an update of open TDWR Service Reports (SR). (See table A-5).

2. REFERENCE DOCUMENTS.

2.1 Federal Aviation Administration DOCUMENTS.

2.1.1 Federal Aviation Administration (FAA) Specifications.

FAA-E-2806/1	Terminal Doppler Weather Radar Specification, November 12, 1992, w/(SCN 1, 2/1/93; SCN 2, 4/9/93; SCN 3, 7/22/93; SCN 4, 7/25/94; SCN 5, 9/27/94; SCN 6, 2/27/95; SCN 7, 6/21/95).
NAS-SS-1000	National Airspace System (NAS) System Specification, Volume I, Functional and Performance Requirements for the National Airspace System General, October 1992.
NAS-SS-1000	NAS System Specification, Volume III, Functional and Performance Requirements for the Ground-to-Air Element, February 1993.

NAS-SS-1000	NAS System Specification, Volume V, Functional and Performance Requirements for the National Airspace System Maintenance and Operations Support Element, October 1992.

2.1.2 FAA Standards.

FAA-STD-024B	Content and Format Requirements for the Preparation of Test and Evaluation Documentation, August 22, 1994.
CT 1710.2B	Preparation and Issuance of Formal Reports, Technical Notes and Other Documentation, February 13, 1990.

2.1.3 Other FAA Publications.

FAA ORDER 1810.1F	FAA Acquisition Policy, March 19, 1993.
FAA ORDER 1810.4B	FAA NAS Test and Evaluation Policy, October 22, 1992.
NAS-IR-31023105 Part 1 Revision C	LLWAS Phase III to TDWR Interface Requirements, December 7, 1993.
NAS-IR-31023105, Part 2 Revision A	LLWAS, Phase II to TDWR Interface Requirements December 2, 1992.
NAS-MD-110	Test and Evaluation (T&E) Terms and Definitions for the National Airspace System, March 27, 1987.
NAS-MD-790	Interface Control Document (ICD), Maintenance Processor Subsystem (MPS) to Remote Monitoring Subsystems (RMSs) and Remote Monitoring Subsystem Concentrators (RMSCs).
NAS-MD-793	Remote Maintenance Monitoring System (RMMS) Functional Requirements for the RMS.
TDWR MTP	Terminal Doppler Weather Radar (TDWR) Master Test Plan (MTP), February 12, 1990.

TECHNICAL NOTE CT-TN92/6	TDWR Operational Test and Evaluation (OT&E) Integration Test Plan, November 1992.
TECHNICAL NOTE CT-TN94/2	TDWR Build 5 Test and Evaluation Master Plan (TEMP), May 1994.
TECHNICAL NOTE CT-TN94/19	TDWR Build 5A Operational Test and Evaluation (OT&E) Integration and OT&E Operational Test Plan, July 1994.
TECHNICAL NOTE CT-TN94/59	TDWR Build 5B Operational Test and Evaluation (OT&E) Integration and OT&E Operational Test Plan, March 1995.
TEST PROCEDURES	TDWR Build 5A OT&E Integration and OT&E Operational Test Procedures, April 1994.
TEST PROCEDURES	TDWR Build 5B OT&E Integration and OT&E Operational Test Procedures, November 1994.
QUICK LOOK REPORT	TDWR OT&E Integration and OT&E Operational Quick Look Report, November 12, 1992.
QUICK LOOK REPORT	TDWR OT&E Integration and OT&E Operational Tests/Retests Quick Look Report, September 21, 1993.
QUICK LOOK REPORT	TDWR OT&E Operational Retest Quick Look Report, April 8, 1994.
QUICK LOOK REPORT	TDWR Build 5A OT&E Integration and OT&E Operational Test Quick Look Report, June 1, 1994.
QUICK LOOK REPORT	TDWR Denver Configuration Checkout Test Quick Look Report, January 23, 1995.
QUICK LOOK REPORT	TDWR Build 5B (LLWAS II) OT&E Integration and OT&E Operational Test Quick Look Report, February 10, 1995.
QUICK LOOK MEMORANDUM	TDWR Denver Configuration Checkout Retest Quick Look Memorandum, May 3, 1995.
QUICK LOOK REPORT	TDWR Build 5B (LLWAS III) OT&E Integration and OT&E Operational Test Quick Look Report, June 8, 1995.

3. SYSTEM DESCRIPTION.

3.1 MISSION REVIEW.

The TDWR is one project of the NAS Plan, whose overall goal is the modernization and improvement of the Government systems supporting aviation commerce in the United States. In the end-state of the NAS Plan, the TDWR will send weather product information to the air traffic control (ATC) computers at the Tower Control Computer Complex (TCCC). Also in the end-state, a mechanism will be provided to transmit TDWR hazardous weather information directly to the pilots. The end-users of TDWR outputs are local, approach, and departure controllers, their supervisors, and pilots. In the interim NAS, the TDWR product information will be displayed to air traffic specialists; i.e., controllers and controllers' supervisors.

The primary mission of the TDWR is to enhance the safety of air travel through the timely detection and reporting of hazardous wind shear in and near the terminal approach and departure zones of an airport. Specific sources of the hazardous wind shear which are to be detected are microbursts and gust fronts. A secondary mission of the TDWR is to improve the management of air traffic in the terminal area through the forecast of gust front induced wind shifts at the airport.

The TDWR is being deployed at unmanned locations, visited only for preventive and corrective maintenance. The TDWR will operate 24 hours a day, 7 days a week, except when shutdown for maintenance. Operator interaction is from the Federal Aviation Administration (FAA) Remote Maintenance Monitoring System (RMMS) via the TDWR Remote Monitoring System (RMS). Local control is through the Maintenance Data Terminal (MDT), also via the RMS.

The TDWR system is composed of four functional areas; Radar Data Acquisition (RDA), Radar Product Generation (RPG), Remote Monitoring Subsystem (RMS), and Display Functional Unit (DFU). The RDA performs radar data collection, weather detection, signal processing, clutter suppression, control, monitoring as well as error detection and handling. The RPG performs weather product generation, RDA scan control and external user output generation. The RMS performs system performance status, monitoring, reporting, maintenance alert and alarm processing, and fault isolation. The DFU provides display and control of weather products. It also performs the archiving function. Archived data will consist of TDWR/Low-Level Wind Shear Alert System (LLWAS) II and/or TDWR/LLWAS III, Geographic Situation Display (GSD)/Ribbon Display Terminal (RDT) blanking, and programmable alarm timeouts.

The RMS function implements those RMMS features necessary to allow remote monitoring of the TDWR system operation. However, the RMMS system is presently not fully operational despite the

fact the system is being fielded. For this reason, the TDWR system also incorporates maintenance features which allow the system to be efficiently maintained during the interim period until the RMMS becomes operational. The system is also designed in a modular fashion which allows the system to be repaired rapidly when malfunctions occur by replacing Line Replaceable Units (LRUs).

3.2 TEST SYSTEM CONFIGURATION.

3.2.1 BUILD 4.

The Build 4 OT&E hardware test configuration consisted of all TDWR system internal interfaces as well as the MPS and System Maintenance Data Terminal (MDT) external interfaces as indicated in figure 3.2-1. The MPS interface was tested using an MPS simulator. Build 4 OT&E was conducted using several iterations of software builds:

a. TA1 was conducted using Build 4 s47, s50, s51, and s51a.
b. TA2 was conducted using Build 4 s63.
c. TA3 was conducted using Build 4 s63.

3.2.2 BUILD 4+.

The Build 4+ OT&E hardware test configuration consisted of all TDWR system internal interfaces as well as the LLWAS II backup communication link and System MDT external interfaces as indicated in figure 3.2-1. The Build 4+ enhancement provided an interface from LLWAS II to the DFU for display of LLWAS II Center Field (CF) winds on the RDTs. An anemometer simulator was used at the CF anemometer to simulate wind speed and direction. Build 4+ OT&E was conducted using two software builds: TA4 was conducted using Build 4+ s67 and s68.

3.2.3 BUILD 5A.

The Build 5A OT&E hardware test configuration consisted of all TDWR system internal interfaces as well as the LLWAS II primary/backup communication and System MDT external interfaces as indicated in figure 3.2-1. The Build 5A enhancement added an external interface from LLWAS II to the RPG and provided for display of LLWAS II boundary and CF winds on the GSDs and RDTs. An anemometer simulator was used at the CF anemometer and two other anemometers to simulate wind speed and direction. The test configuration also included additional hardware and software to provide an interface to the Integrated Terminal Weather System (ITWS). This interface was provided for the ITWS Demonstration and was not tested by ACT-320. Build 5A OT&E was conducted using two software builds:

a. TA5 was conducted using Build 5A s15 (ITWS version).
b. TA6 was conducted using Build 5A s19 (ITWS version).

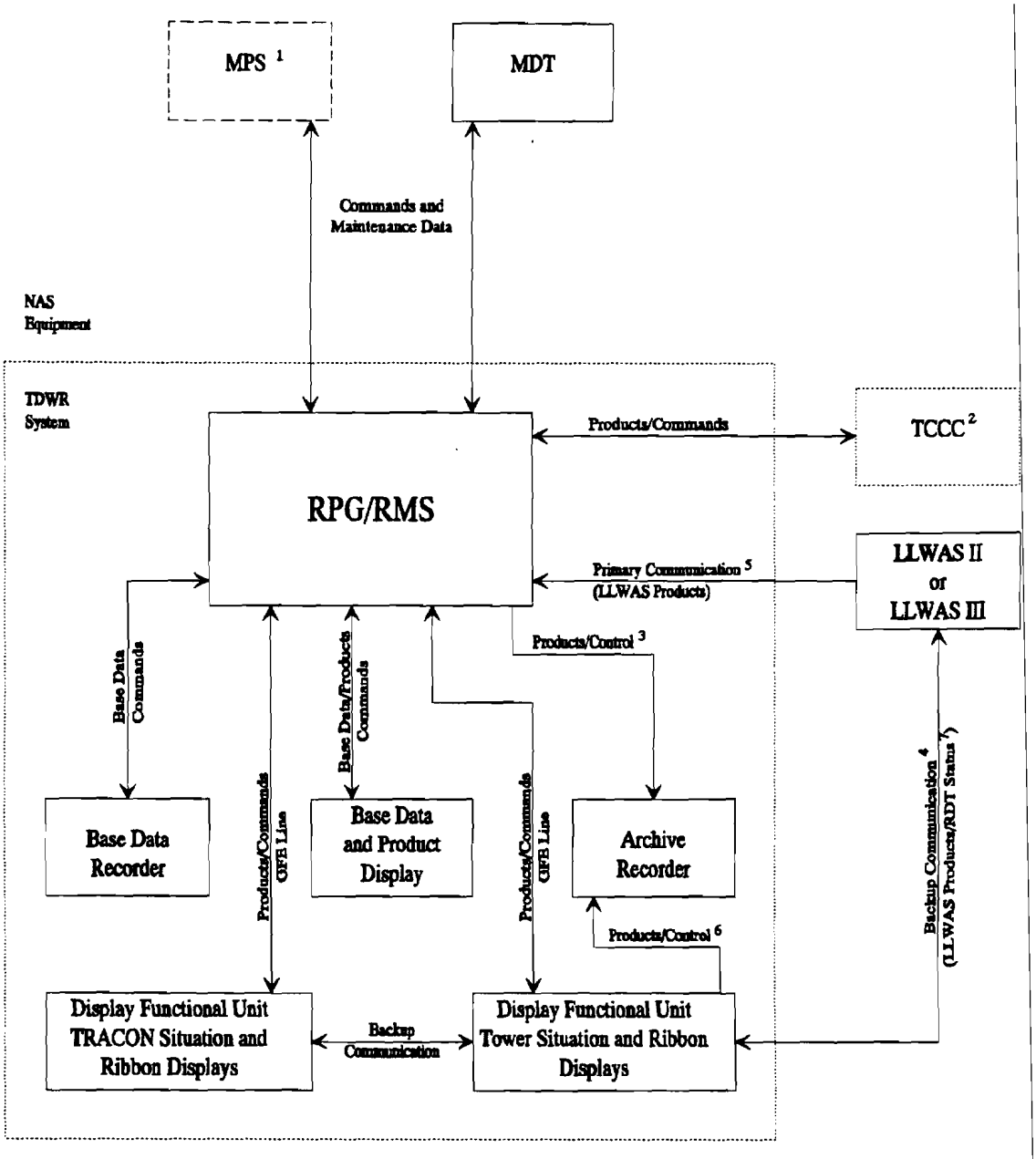

Notes:

1 OT&E performed by ACT-330

2 Not available in the NAS

3 This interface was tested during Builds 4, 4+, and 5A OT&E; it does not exist in the Build 5B configuration

4 This interface was tested during Builds 4+, 5A, and 5B OT&E

5 This interface was tested during Builds 5A and 5B OT&E

6 This interface was tested during Build 5B OT&E

7 RDT status is used by LLWAS III while in backup mode only

FIGURE 3.2-1. TDWR EXTERNAL INTERFACES

3.2.4 BUILD 5B.

The Build 5B OT&E hardware test configuration consisted of all TDWR system internal interfaces as well as the LLWAS II or LLWAS III primary/backup communication and System MDT external interfaces as indicated in figure 3.2-1. The Build 5B enhancement added an external interface from LLWAS III to the RPG and provided for display of LLWAS III threshold and CF winds on the GSDs and RDTs. In addition, LLWAS microburst and wind-shear alerts are integrated with TDWR microburst and wind-shear alerts to produce an integrated alert for display on the GSDs and RDTs. The Build 5B enhancement also affected an internal interface by moving the Archive Recording function from the RPG to the DFU. Build 5B OT&E was conducted using the same software build: TA7, TA8 TA9, and TA10 were conducted using Build 5B s15.

3.3 INTERFACES.

TDWR provides external interfaces to LLWAS II and/or LLWAS III, RMMS, MDT, and TCCC.

3.3.1 TDWR--LLWAS II.

The TDWR to LLWAS II communications interface consists of a primary and backup interface, and is described in NAS-IR-31023105, Part 2, Revision A. The primary interface connects the TDWR RPG to the LLWAS Tower Display port on the LLWAS processor. The backup interface connects the TDWR Tower GSD to the LLWAS Spare port on the LLWAS processor. In the event of a primary interface failure, the switchover from primary to backup occurs automatically. Both interfaces operate at 1200 bits per second (bps). Figure 3.3.1-1 presents the TDWR--LLWAS II interface. Note: TE stands for transmission equipment.

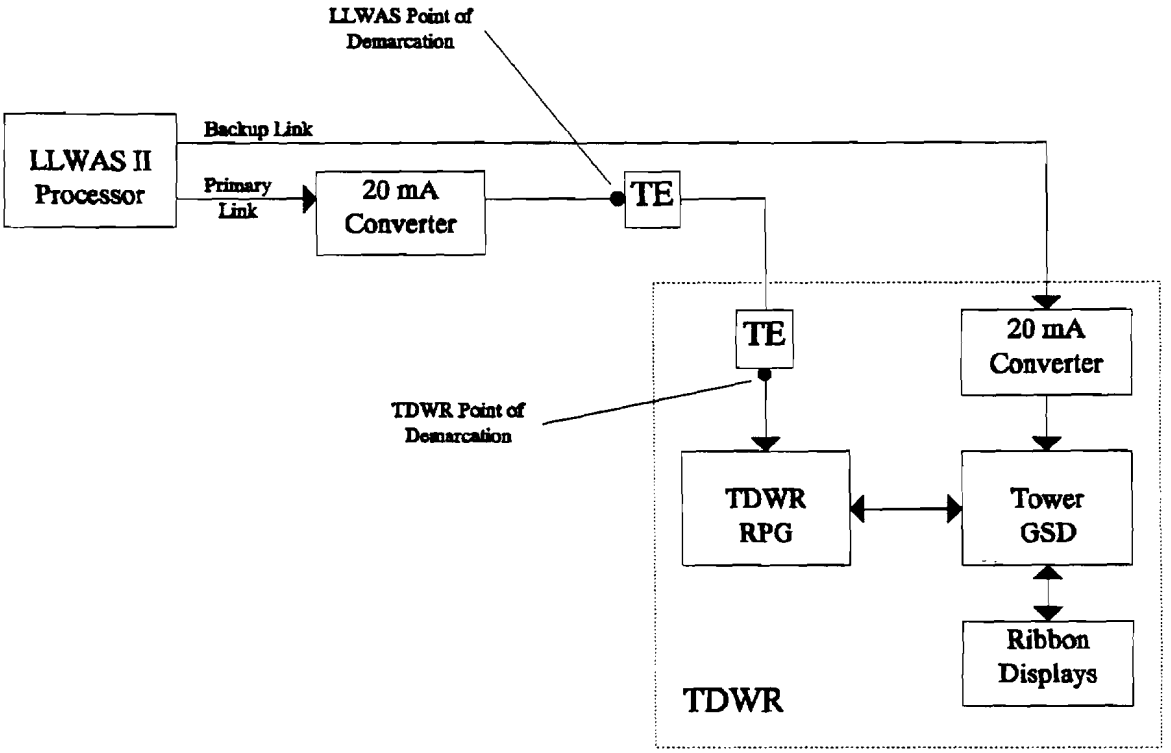

FIGURE 3.3.1-1. TDWR--LLWAS II INTERFACE

4. TEST AND EVALUATION DESCRIPTION.

Detailed descriptions of test subelements, objectives, participants, and methodologies are contained in appendix B.

4.1 TEST SCHEDULE AND LOCATIONS.

Appendix A, table A-1 provides a summary of all test activities with dates and locations.

4.2 PARTICIPANTS.

Appendix A, table A-2 provides a summary of all participating organizations and their functional contributions.

ACT-320 acted as the agent of the Program Manager to manage the Test and Evaluation (T&E) program per FAA Order 1810.4B. Specifically, ACT-320 performed the following OT&E-related activities:

a. Prepared OT&E Integration and OT&E Operational test plans, procedures, and reports;

b. Directed and conducted all OT&E Integration and OT&E Operational tests and retests;

c. Reviewed AOS-250 OT&E Shakedown test requirements, plans, procedures, and reports;

d. Monitored AOS-250 OT&E Shakedown tests and retests.

Many other FAA organizations participated in OT&E testing, providing technical knowledge, maintenance support, test expertise, etc. These organizations and their activities follow.

The Radar Support Engineering Branch, AOS-250, performed the following OT&E-related activities:

a. Prepared OT&E Shakedown requirements, plans, procedures, and reports;

b. Directed and conducted all OT&E Shakedown test and retests;

c. Reviewed OT&E Integration and OT&E Operational test requirements, plans, and reports;

d. Monitored and participated in OT&E Integration and OT&E Operational tests and retests.

The Communications Infrastructure Branch, ACT-330, prepared TDWR--RMS OT&E Integration test procedures, directed and conducted

TDWR--RMS OT&E Integration tests and retests and prepared the appropriate reports. This organization also performed Lightning Protection and Grounding Surveys on the Houston and Oklahoma City sites to verify compliance to FAA-STD-019b.

AOS-220 participated in the Build 5A and Build 5B OT&E Integration and OT&E Operational test conduct.

AML-446 conducted bullgear wear and vibration analyses.

AMA-441 provided support during OT&E Operational retests.

The Civil Aviation Security Division, ASO-700, conducted a comprehensive security risk assessment, and developed the baseline Sensitive Application Certification (SAC) and Accreditation Document for the TDWR system.

Southern, Southwest, Eastern, and Central Regional Airway Facilities Divisions, as well as the Memphis, Houston, St. Louis Airway Facilities Sectors participated in OT&E Integration, OT&E Operational, and OT&E Shakedown test conduct.

Southern and Southwest Regional Air Traffic Divisions, as well as the Memphis and Houston Air Traffic Facilities participated in OT&E Integration, OT&E Operational, and OT&E Shakedown test conduct.

The National Severe Storms Laboratory (NSSL), under contract by ACT-320 and the Program Office, provided extensive meteorological and data analysis support during all OT&E Operational Weather Performance Tests.

4.3 TEST AND SPECIALIZED EQUIPMENT.

The following test equipment was used during the course of this testing:

- MPS Simulator
- Anemometer Simulator
- LLWAS Scenario Tapes (For LLWAS--TDWR interface testing)
- Weather Scenario Test Tape (AOS-250)
- Power Monitor, BMI 4800
- Protocol Analyzer, HP 4957A
- Oscilloscope, Tektronics, 2340A
- Spectrum Analyzer
- Signal Generators, Gigatronics
- NSSL Supplied Weather Scenario Tapes Used For Weather Product Truthing

3.3.2 TDWR--LLWAS III.

The TDWR to LLWAS III communications interface consists of a primary and backup interface, and is described in NAS-IR-31023105, Part 1, Revision C. The primary interface connects the TDWR RPG to the LLWAS processor. The backup interface connects the TDWR Tower GSD to the LLWAS processor. In the event of a TDWR failure, the switchover from primary to backup occurs after active runways are configured using the LLWAS keypad. The GSD operator then acknowledges the switchover to the backup link via a GSD menu indicating that TDWR is nonoperational. Both interfaces operate at 9600 bps. Figure 3.3.2-1 presents the TDWR--LLWAS III interface.

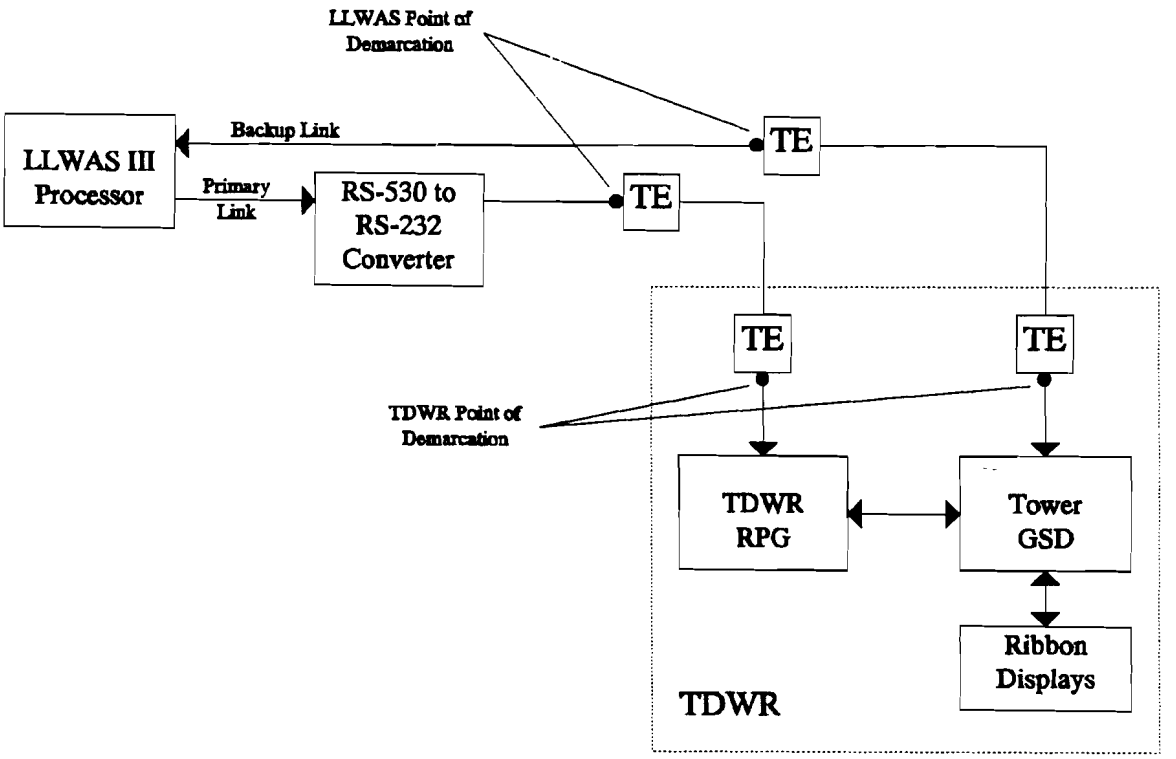

FIGURE 3.3.2-1. TDWR--LLWAS III INTERFACE

3.3.3 TDWR--RMMS.

The TDWR RPG/RMS provides the following interfaces:

a. RMMS: The RMMS utilizes the MPS to remotely control and monitor the TDWR. This interface is described in NAS-MD-790 and NAS-MD-793.

b. MDT: The MDT is located at the TDWR site in the Concrete Masonry Unit (CMU) and is used to locally control and monitor the TDWR. This interface can operate at 1200, 2400, 4800, and 9600 bps.

These interfaces are presented in figure 3.3.3-1.

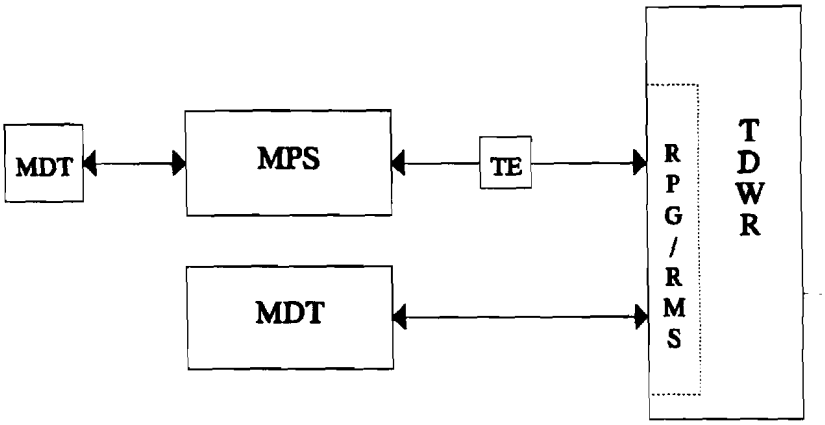

FIGURE 3.3.3-1. TDWR--MPS AND TDWR--MDT INTERFACES

4.4 TEST OBJECTIVES/CRITERIA.

Detailed descriptions of test objectives are provided in appendix B.

4.4.1 OT&E Integration.

OT&E Integration consisted of testing NAS System End-to-End Performance. Specifically, NAS-SS-1000 Volume I System Level, and Volumes II through V, Subsystem Level Requirements, as identified in the Baseline TDWR OT&E Test Plan and the TDWR Build 5 TEMP, were tested. This testing established NAS baseline performance or verified that previously existing NAS performance was not degraded.

The OT&E Integration effort was conducted with the following objectives:

a. Verify the TDWR's capability to properly interface and function with the associated NAS subsystems, including hardware, software, operational and maintenance activities;

b. Verify that the interfaces support the specification's mandated performance;

c. Ensure the early detection of interface design problems;

d. Minimize site problems by comprehensive integration testing and evaluation;

e. Collection of system reliability and safety measurements;

f. Verify the requirements of NAS System Specification.

4.4.2 OT&E Operational.

OT&E Operational testing had the intent of verifying the operational effectiveness and suitability of the equipment with user participation in the evaluation testing. Aspects of OT&E Operational testing are as follows:

a. Reliability, maintainability, and availability;

b. Degraded operations and operational utilization scenarios;

c. Stress and NAS loading testing of all interoperable subsystems;

d. Human factors;

e. Safety and security;

f. Site-adaptation;

g. Transition switchover.

OT&E Operational testing employed system users to assess operational suitability and effectiveness of the subsystem in the NAS environment. The OT&E Operational testing effort was conducted with the following objectives:

a. Verification and validation of the operational requirements;

b. Verification and validation of operational and maintenance procedures;

c. Verification and validation of system documentation completeness and useability;

d. Evaluation of the effectiveness of contractor-developed training programs;

e. Evaluation and determination of the effect of the segment under test on the operational mission;

f. Identification and evaluation of the safety factors involved during transition and determination that transition can be achieved safely;

g. Evaluation of the subsystem's operations and maintenance with respect to the variations in site configurations and adaptation;

h. Assessment of the subsystem's capability to support current and future modifications;

i. Assessment and evaluation of the readiness of personnel and procedures for field deployment and operational use.

4.4.2.1 Reliability, Maintainability, and Availability (RMA).

The RMA T&E was conducted to estimate and verify that the RMA requirements (parts accessibility, Mean Time Between Failures (MTBF), Mean Time Between Critical Failures (MTBCF), etc.) were achievable in an operational environment.

4.4.2.2 Degraded Operations.

This test was conducted to determine the acceptability of the

resultant operational degradation when failures are induced in the system.

4.4.2.3 Stress and NAS Loading.

This test was conducted to estimate and determine the levels of stress and NAS loading provided by the operational environment.

4.4.2.4 Human Factors.

This test was conducted to evaluate the interaction of personnel with the system in the operational environment.

4.4.2.5 Safety.

This test was conducted to estimate and determine the degree to which the system met personnel safety requirements.

4.4.2.6 Site Adaptation.

This test was conducted to ensure that site data unique to each TDWR facility was correctly developed, updated, and installed in the system.

4.4.2.7 Security.

This test was conducted to estimate and determine the effectiveness of the system in allowing only authorized use.

The objectives of the ASO-700 Security Assessment were to develop the baseline SAC for the TDWR, to evaluate and develop standard practices and procedures for required security controls and countermeasures, and to ensure compliance with Deployment Readiness Review (DRR) issues.

4.4.2.8 Transition Switchover.

This test was conducted to estimate and determine that the system and procedures were such that a move from the old system (LLWAS) to the new system (integrated TDWR--LLWAS) and vice versa could be accomplished without degrading NAS operations while minimizing impact on the user.

4.4.2.9 Weather Performance.

The objective of the Weather Performance test is to verify that TDWR meets operational suitability and reliability requirements in relation to its ability to detect hazardous weather.

4.5 TESTING DESCRIPTIONS.

Appendix A, table A-3 provides traceability of functional subelements to Test Activity.

4.6 DATA COLLECTION AND ANALYSIS METHOD.

Pretest procedures were written in accordance with baseline system configuration, and were modified accordingly when incremental software builds were installed and hardware modifications were retrofitted. Scenario Data Tapes were generated and were played back to ensure the system reacted as predicted.

Weather data were collected by NSSL for algorithmic verification. Data were analyzed on real-time displays or collected on tape or disk for further off-line analysis. Pictures were taken (e.g., transmitter spectrum) to analyze the integrity of the system. An AC Power Monitoring Meter with real-time graphic printouts was used to monitor the commercial power supply to the TDWR system.

An Investigative Panel of meteorological experts was assembled to analyze results and determine the best ways to improve system detection capability and provide weather data "truthing."

More specific data regarding each test is found in appendix B.

5. RESULTS AND DISCUSSION.

Appendix B provides a test description and summary of results for each of the OT&E Subelements.

6. CONCLUSIONS.

The following significant problems need to be addressed:

6.1 RELIABILITY.

Early testing of the Terminal Doppler Weather Radar (TDWR) revealed a serious reliability problem. The installation of a Reliability Enhancement Package in January 94 provided substantial improvement, however, the reliability re-test (TA5) which was conducted February through March 94 did not demonstrate the required level of reliability. (See appendix B.) In spite of the fact that the Harris computer at Memphis was completely replaced, there have been subsequent failures of Harris boards at Memphis. There has been an unusually high number of Antenna Drive Motor failures. While modifications since that time have demonstrated a gradual improvement, there has been no further objective study which would identify the actual reliability numbers for the TDWR.

6.2 Low-Level Wind Shear (LLWAS) II.

The LLWAS II mapping issue as described in Service Report (SR) IAH94-SR001. There is a discrepancy between what the LLWAS processor actually transmits versus what the TDWR expects to receive. The LLWAS II transmits a Center Field Wind (30-second average) in a field in which the TDWR is expecting sensor data. This problem manifests itself differently dependent upon the local LLWAS configuration file.

6.3 Low-Level Wind Shear (LLWAS) III.

TDWR--LLWAS primary link problems persist even though substantial improvements have been made in this area. Periodically, a good information frame is transmitted from the LLWAS master station through the RS-232 to RS-530 converter to the modem. This frame is either corrupted in the LLWAS modem, leased line, TDWR modem, or a combination thereof because when it reaches the TDWR junction box it has been transformed into an aborted frame. This problem was observed in Denver.

6.4 SAFETY.

The AMH-400 Job Safety Analysis indicated potential safety deficiencies in pedestal-related fall hazards. One of these is the absence of pedestal ladder safety climb devices. (See appendix B.)

6.5 WEATHER-RELATED ISSUES.

As indicated by the Investigative Panel (see appendix B), the weather-related issues are:

a. Gust Front Misses
b. Gust Front False Alarms
c. Microburst False Alarms

6.6 ADAPTATION.

There is a concern regarding the verification of adaptation data. With the exception of Houston, there was no objective data available to check the adaptation parameters against. This makes it nearly impossible to verify whether or not these parameters are correct.

6.7 SERVICE REPORTS.

There are a number of SRs which still remain open. See tables A4 and A5. The SRs listed in table A5 do not include those AOS-250 and ACT-330 SRs which still remain open.

7. RECOMMENDATIONS.

7.1 RELIABILITY.

AND-420 and ALM-400C have both recognized the problem with the reliability of the antenna drive motors. A number of possible improvements are being or have been identified. Testing of some of these options is being performed now and more is planned. This effort will result in a set of alternative solutions being defined. Selection and implementation of an appropriate solution will be based on cost effectiveness and other parameters.

7.2 Low-Level Wind Shear Alert System (LLWAS) II.

This interface is not in accordance with the Interface Requirements Document (IRD) NAS-IR-31023105 Part 2, Revision A dated December 2, 1992. (Reference SR IAH94-0001). If the interface or the corresponding documentation is not be changed, ACT-320 recommends procedures be developed to ensure sensor mapping is correctly implemented at all Terminal Doppler Weather Radar (TDWR)/LLWAS II sites.

7.3 Low-Level Wind Shear Alert System (LLWAS) III.

Previously observed link problems have been substantially reduced with the implementation of new software releases. The problem with aborted frames remains. AOS-220 has protocol analyzer data and is working on the issue. It may be that the modem parameters will have to be optimized.

7.4 SAFETY.

A contract has been awarded to correct safety deficiencies. A prototype platform is expected to be demonstrated in the Fall of 1995 with a first article being delivered in early 1996.

7.5 WEATHER-RELATED ISSUES.

Solutions recommended by the Investigative Panel for Weather-Related issues are as follows:

a. Gust Front Misses. The majority of gust front misses were caused by multiple trip echoes. The Investigative Panel feels that continued long-term research may result in more robust range de-obscuration editing techniques.

b. Gust Front False Alarms. Most of the false gust front detections were due to dealiasing errors. Better dealiasing techniques are needed. Also, there were several false detections

in the presence of vertical wind shear. A possible remedy is to add a technique to the algorithm to recognize and remove the false alarms based on the knowledge that vertical wind shear is present.

c. Microburst False Alarms. There is concern that there are too many microburst false alarms (18 percent False Alarm Rate (FAR) exceeds the performance design goal). Results indicate that many of the microburst false alarms were caused by spurious velocity data in low reflectivity, divergent regions away from storm cores. ACT-320 and National Severe Storms Laboratory (NSSL) recommend the following remedies:

1. Velocity point-target editing: Many of the spurious data points may be eliminated by the implementation of this technique.

2. Implement storm cell/microburst shape overlap test: This would require microburst detections to be more closely associated with a storm cell.

3. Reduce storm cell test to 0 kilometer (km): This would also require microburst detections to be more closely associated with a storm cell.

4. Add reflectivity thresholding: Many of the false alarms were in areas of weak reflectivity.

5. Raise microburst elevation angle: If clutter are indeed affecting the data on the microburst tilt, a 0.1° to 0.2° increase in the elevation angle may reduce those effects. (The MTS location should be adjusted accordingly.)

6. Increase the signal-to-noise ratio threshold for the shear segments: The same reasoning for reflectivity thresholding applies here.

7. Increase the delta-v threshold and the number of shear segments required: Although it is not certain, it is believed that many of the false alarms barely exceeded these thresholds.

7.6 ADAPTATION.

ACT-320 recommends that all adaptation data provided to Raytheon be captured in a database and used to verify site parameters upon site acceptance. This would enable early detection of errors and at least ensure that the parameters provided to the contractor have been implemented correctly.

7.7 SERVICE REPORTS (SR).

ACT-320 recommends AND-420 develop a plan for the closure of all remaining SRs.

8. ACRONYMS AND ABBREVIATIONS.

ADR	Archive Data Recorder
AF	Airway Facilities
APD	Archive Playback Device
ARENA	Area Noted For Attention
AT	Air Traffic
ATC	Air Traffic Control
ATCS	Air Traffic Control Specialist
BDD	Base Data Display
BDR	Base Data Recorder
bps	Bits Per Second
CF	Center Field
CFW	Center Field Wind
CMU	Concrete Masonry Unit
CREM	Clutter Residue Editing Map
DFU	Display Functional Unit
DRR	Deployment Readiness Review
DTE	Design, Test & Evaluation
FAA	Federal Aviation Administration
FAR	False Alarm Ratio
GF	Gust Front
GFDA	Gust Front Detection Algorithm
GSD	Geographic Situation Display
ICD	Interface Control Document
IP	Investigative Panel
IRD	Interface Requirements Document
ITWS	Integrated Terminal Weather System
km	kilometer
LL	Lincoln Laboratory
LLWAS	Low-Level Wind Shear Alert System
LLWAS II	Low-Level Wind Shear Alert System Phase II
LLWAS III	Low-Level Wind Shear Alert System Phase III
LRU	Line Replaceable Unit
MBA	Microburst Alert
MDA	Microburst Detection Algorithm
MDT	Maintenance Data Terminal

MIT	Massachusetts Institute of Technology
MTBCF	Mean Time Between Critical Failures
MTBF	Mean Time Between Failures
MTP	Master Test Plan
NAS	National Airspace System
NCAR	National Center for Atmospheric Research
NSSL	National Severe Storms Laboratory
OSHA	Occupational Safety and Health Administration
OT&E	Operational Test and Evaluation
POD	Probability of Detection
RDA	Radar Data Acquisition
RDT	Ribbon Display Terminal
RMA	Reliability, Maintainability and Availability
RMMS	Remote Maintenance Monitoring System
RMS	Remote Monitoring Subsystem
RPG	Radar Products Generator
SAC	Sensitive Application Certification
SR	Service Report
TCCC	Terminal Control Computer Complex
TDWR	Terminal Doppler Weather Radar
TE	Transmission Equipment
T&E	Test and Evaluation
TIB	Technical Instruction Book
TRACON	Terminal Radar Approach Control
TVRTM	Test Verification Requirements Traceability Matrix
WSA	Wind Shear Alert

APPENDIX A

REFERENCE DATA

Table A-1. TDWR Test Activities

Test Activity		Location	Period of Test	Test Report
TA1	OT&E Integration/Operational	Oklahoma City, OK	8/24 thru 10/30/92	12 Nov 92
TA2	Weather Performance Retest	Oklahoma City, OK	4/26 thru 5/23/93	12 Aug 93
TA3	OT&E Operational Retest	Houston, TX	4/5 thru 5/13/93	21 Sep 93
TA4	Reliability Test & ATC Evaluation	Memphis, TN	7/27 thru 9/7/93	21 Sep 93
TA5	Reliability Retest	Memphis, TN	2/24 thru 3/26/94	12 Apr 94
TA6	Build 5A Integration/Operational	Memphis, TN	4/11 thru 4/21/94	2 Jun 94
TA7	Denver Configuration Checkout (Build 5B)	Denver, CO	1/3 thru 1/6/95	23 Jan 95
TA8	Build 5B/LLWAS II Integration/Operational	Kansas City, MO	1/23 thru 1/26/95	10 Feb 95
TA9	Denver Configuration Checkout (Link Timeout Delay Changes)	Denver, CO	4/25 thru 4/28/95	5 May 95
TA10	Build 5B/LLWAS III Integration/Operational	Orlando, FL	5/8 thru 5/18/95	8 Jun 95

Table A-2. Participating Organizations

ORGANIZATION	FUNCTION	TEST ACTIVITY
ACE-452	System Support	TA8
ACT-320	OT&E Integration & Operational Tests	ALL
ACT-330	Lightning Protection & Grounding Survey	TA1
AMA-441	System Support	TA1; TA2
AML-446	Bullgear & Vibration Analysis	TA1
AOS-220	LLWAS Test Support	TA6
AOS-250	Test Support	ALL
AOS-250	Meteorological Support & Data Analysis	TA10
ASO-452	System Support	TA4; TA5; TA6
ASO-700	Security Risk Assessment	TA4
ASW-452	System Support	TA2
DIA AFS	System Support	TA7; TA9
MCO AFS	System Support	TA10
NSSL	Meteorological Support & Data Analysis	TA1; TA2; TA7

Table A-3. TEST ACTIVITY-OT&E SUB-ELEMENTS TRACEABILITY MATRIX

	TA1	TA2	TA3	TA4	TA5	TA6	TA7	TA8	TA9	TA10
OT&E Integration Sub-elements:										
NAS Subsystem Integration	x	x	x	x	x	x	x	x	x	x
NAS System Integration			x			x	x	x		x
NAS End-to-End Performance				x	x	x		x		x
OT&E Operational Sub-elements:										
Reliability	x		x	x	x	x	x	x	x	x
Availability	x		x			x	x	x		
Degraded Operations						x	x	x	x	x
Stress and NAS Loading						x	x			x
Human Factors	x			x		x				
Safety	x	x	x							
Maintainability	x		x		x					
Site Adaptation Data	x					x	x	x	x	x
Security				x						
Transition Switchover				x		x	x			
Weather Performance	x	x				x	x			x

Table A-4. Service Report Status

TEST ACTIVITY		TOTAL SERVICE REPORTS OPENED	REMAINING REPORTS - PRIORITY	
			HIGH	LOW
TA1	OT&E Integration/Operational	105	0	9
TA2	Weather Performance ReTest	22	0	4
TA3	OT&E Operational ReTest	15	1	0
TA4	Reliability & ATC Evaluation	61	1	5
TA5	Reliability Retest	15	1	3
TA6	Build 5A Integration/Operational	11	2	5
TA7	Denver Configuration Checkout (Build 5B)	4	0	4
TA8	Build 5B/LLWAS II Integration/Operational	1	0	0
TA9	Denver Configuration Checkout (Link Timeout Delay Changes)	0	0	0
TA10	Build 5B/LLWAS III Integration/Operational	0	0	0
	TOTAL:	234	5	30

Table A-5. Open Service Reports

9/20/95

OPEN SERVICE REPORTS

SERVICE REPORT	ASSIGNEE	DATE ASSIGNED	PR	SUBJECT
DVX-SR014	TECHNICAL OFFICER	2/8/95		Re-Boot ALARM - STR #3763
DVX-SR015	TECHNICAL OFFICER	2/8/95		LLWAS Primary Link DropOuts
DVX-SR016	TECHNICAL OFFICER	2/8/95		Elimination of Wind Shear Alert
DVX-SR017	TECHNICAL OFFICER	2/8/95		Center Field (CF) Wind Product Not Updating
IAH94-SR001	TECHNICAL OFFICER	5/17/94	H	Violation of NAS-IR-31023105, LLWAS II/TDWR Interface
MEM93-SR102	TECHNICAL OFFICER	12/20/93	H	Instability Residue Alarms
MEM93-SR134	TECHNICAL OFFICER	8/25/93		History Log
MEM93-SR137	TECHNICAL OFFICER	8/27/93		Gust Front on Tower GSD
MEM93-SR144	TECHNICAL OFFICER	9/1/93		HSA-Boot ALARM
MEM93-SR145	TECHNICAL OFFICER	9/1/93		Harris Re-Boot Capability
MEM93-SR160	TECHNICAL OFFICER	9/7/93		DDC Reset
MEM94-SR002	TECHNICAL OFFICER	2/7/94		TIB Changes
MEM94-SR007	TECHNICAL OFFICER	3/7/94	H	Instability Residue ALARM
MEM94-SR014	TECHNICAL OFFICER	3/18/94		ETHERNET Cable Connectors
MEM94-SR015	TECHNICAL OFFICER	3/24/94		8mm Tape Recorder
MEM94-SR016	TECHNICAL OFFICER	4/19/94		Ribbon Display Terminal #1
MEM94-SR017	TECHNICAL OFFICER	4/19/94	H	Loss of Center Field Wind (CFW)
MEM94-SR018	TECHNICAL OFFICER	4/19/94	H	Loss of LLWAS Wind Information
MEM94-SR019	TECHNICAL OFFICER	5/11/94		MEM Site Modems to Junction Box Connectivity
MEM94-SR020	TECHNICAL OFFICER	4/11/94		Memphis Tower and TRACON DFU Runway Configurations
MEM94-SR025	TECHNICAL OFFICER	4/20/94		GSD Audible Alarm
MEM94-SR026	TECHNICAL OFFICER	5/11/94		Proper Setting of Memphis TDWR Modems
OKC-SR009	TEST DIRECTOR	5/28/93		Gust Front False Alarms
OKC-SR011	TECHNICAL OFFICER	10/25/93		Error Reporting (2806)
OKC-SR017	TECHNICAL OFFICER	8/17/93		Removal of Range-Folded Echoes
OKC-SR019	TEST DIRECTOR	3/11/93		Gust Front Alarm
OKC-SR022	TEST DIRECTOR	2/17/93		MBA on Runway Corridor
OKC-SR029	TECHNICAL OFFICER	8/17/93		False Gust Front Detections
OKC-SR058	TEST DIRECTOR	2/17/93		Unrealistic Microburst Values on GSD (2806)
OKC-SR083	TECHNICAL OFFICER	8/17/93		Clutter Residue Editing Maps
OKC-SR113	TECHNICAL OFFICER	1/14/93		Storm Cell Check
OKC93-SR019	TECHNICAL OFFICER	8/12/93		Microburst False Alarm Ratio
OKC93-SR020	TECHNICAL OFFICER	8/12/93		Gust Front Misses
OKC93-SR021	TECHNICAL OFFICER	8/12/93		Grey Shading on the GSD
OKC94-SR001	TECHNICAL OFFICER	3/22/94		Velocity Dealiasing Errors

APPENDIX B

TDWR TEST ACTIVITIES

OT&E Subelement: NAS Subsystem Integration

Test Objective: To determine that the TDWR--MDT, TDWR--Base Data Display (BDD), TDWR--Base Data Recorder (BDR), and TDWR--Archive Data Recorder (ADR) interfaces exist and are functional in accordance with the appropriate requirements.

Test Participants: ACT-320; AOS-250; ASO-452; Memphis, Denver, Kansas City, and Orlando Air Traffic (AT) and Airway Facilities (AF)

Data Collection and Analysis Method: MDT screens and BDD graphic base product printouts were collected; BDD was monitored for accuracy. Base data were recorded and played back on the BDR. Archived weather products were recorded and played back on the ADR.

Test Description/Results:

The TDWR--MDT interface was formally tested in Oklahoma City (TA1), and was verified during all other test periods primarily through normal daily system operation.

The test team verified the TDWR--MDT interface and, in particular, MDT operation, by reviewing all path options and by initiating and verifying system commands, i.e., system reconfiguration, command diagnostic tests, power off antenna, display ALARM screen, etc. The TDWR--MDT interface was found to operate properly. However, the test team did note several errors in the Technical Instruction Book (TIB), Software Users Manual for the RMS Software, and prepared SRs highlighting these errors. See Maintainability Test Results for TIB error resolution.

Similarly, the TDWR--BDR and TDWR--BDD interfaces were formally tested in Oklahoma City (TA1), and were verified during most other test periods primarily through normal daily system operation. The BDR was used for playback of TDWR scenario tapes. Enhancements to the BDD were included as part of the Build 5B enhancement, and included the following: zoom/unzoom, continuous request, time lapse, cursor

position readout, etc. These enhancements were tested in Denver (TA7) and Orlando (TA10) and were found to function properly.

The TDWR--ADR interface was also included as part of the Build 5B enhancement. To verify this interface, ACT-320 downloaded GSD archive data to tape using the ADR, transported the ADR to the TDWR site, connected the ADR to the BDD and reconfigured the BDD as an archive data playback device (APD), transferred the archive data to the APD hard disk, and played back the archive files. ACT-320 successfully performed this test in Denver (TA7) and Orlando (TA10).

OT&E Subelement: NAS System Integration

Test Objective: To ensure that TDWR external interfaces (TCCC, RMMS, LLWAS) exist and are functional in accordance with the appropriate requirements.

Test Participants: ACT-320; AOS-220/250; Memphis, Houston, Denver, Kansas City, and Orlando Air Traffic and Airway Facilities

Data Collection and Analysis Method: Protocol analyzer data was collected to determine if interfaces operated properly; scenario tapes were used, displays were monitored, and alarms/alerts were logged to determine if the TDWR responded appropriately.

Test Description/Results:

The TCCC is not available and, therefore, the TDWR--TCCC interface was not tested.

The Communications and Infrastructure Branch, ACT-330, who has the responsibility for verifying the TDWR--RMMS interface, conducted baseline and Build 5 TDWR--RMMS OT&E Integration tests and retests in Oklahoma City (1992), Houston (1993), St. Louis (1994), and Washington, DC (1995). Test descriptions and results are highlighted in ACT-330 test reports.

ACT-320 conducted TDWR--LLWAS II (Build 4+) OT&E tests in Houston (TA3) to verify that LLWAS centerfield winds were accurately displayed on the RDTs. The test was conducted using both simulated and real-time centerfield wind data. In each case, TDWR RDT and LLWAS displays were monitored for data correlation. In both the simulated and real-time tests, the TDWR RDT and LLWAS displays showed the same centerfield wind data.

ACT-320 conducted TDWR--LLWAS II Build 5A OT&E integration tests in Houston (to coincide with AOS-250 Build 5A OT&E Shakedown tests while the remainder of ACT-320's Build 5A OT&E took place in Memphis (TA6)) to verify that LLWAS centerfield and sensor

winds are accurately displayed on the GSDs and RDTs and to satisfy NAS-SS-1000 requirements. ACT-320 used an LLWAS anemometer simulator to simulate wind speed and direction at three sensors (centerfield and sensors 4 and 5). LLWAS sensors were mapped to selected runways. The GSDs and RDTs were monitored for display accuracy as the wind speed and direction were varied.

Test results were varied. Centerfield wind information was accurately displayed on the GSDs and RDTs and the four NAS-SS-1000 requirements were successfully verified. However, while the centerfield wind information was accurately displayed on the TDWR displays, other sensors' wind information was not accurately displayed. A discrepancy exists between the data transmitted from the LLWAS II processor and the data expected by the TDWR. The following table shows this discrepancy for Houston:

LLWAS II Transmits	TDWR Expects
CF 2-min avg	CF 2-min avg
CF 30-sec avg	Sensor 2
Sensor 2	Sensor 3
Sensor 3	Sensor 4
Sensor 4	Sensor 5
Sensor 6	Sensor 6

The discrepancy was clear when sensors 2, 3, 4, and 5 were mapped to runways. The wind information for sensor 2 was actually CF 30-second average, sensor 3 was actually sensor 2 information, sensor 4 was actually sensor 3 information, and sensor 5 was actually sensor 4 information. Sensor 6 wind information was displayed correctly.

While the above LLWAS II data transmittal sequence pertains to Houston, all LLWAS II data is transmitted accordingly: CF 2-minute avg, CF 30-second average, followed by four

other sensors. The TDWR expects the LLWAS data as in the table above, per the TDWR--LLWAS Interface Control Document (ICD), dated August 1, 1993. The LLWAS CF 30-second average is not documented in the ICD. This discrepancy between transmitted data and expected data will exist at all LLWAS II sites.

ACT-320 conducted TDWR--LLWAS III configuration checkout tests in Denver (TA7) to verify the primary and backup links and to verify that LLWAS III centerfield and threshold winds and microburst/wind-shear alerts are accurately displayed on the GSDs and RDTs. ACT-320 used an LLWAS scenario tape to simulate wind data. ACT-320 found the backup link to function properly, but observed primary link dropouts when the RDTs displayed blanks for threshold winds and displayed 9s for centerfield wind data. These drop-outs lasted 15-20 seconds and occurred several times an hour. Effects of the TDWR--LLWAS Integration Algorithm were evident; LLWAS microburst and wind shear alerts were reduced when not confirmed by TDWR and vice versa.

ACT-320 conducted the TDWR--LLWAS II Build 5B OT&E tests in Kansas City (TA8) to verify the primary and backup links and to verify that LLWAS II centerfield and sensor threshold winds were accurately displayed on the GSDs and RDTs. Test results were varied; however, they were expected since the Build 5B LLWAS II interface was similar to the Build 5A LLWAS II interface. (Please see Build 5A OT&E results above.)

ACT-320 conducted the TDWR--LLWAS III Build 5B OT&E test in Orlando (TA10) to verify the primary and backup links and to verify that LLWAS III centerfield and threshold winds and microburst/wind-shear alerts were accurately displayed on the GSDs and RDTs. The GSD and RDTs were monitored for those centerfield wind, threshold winds, and microburst and wind shear alerts present on the LLWAS scenario tape. ACT-320 successfully completed this test by verifying expected weather phenomena on both the GSD and RDTs. As expected, effects of the TDWR--LLWAS

Integration Algorithm were evident; LLWAS microburst and wind shear alerts were reduced when not confirmed by TDWR and vice versa. The following examples of LLWAS alerts not confirmed by TDWR were seen: "MBA 30K-" was reduced to "WSA 25K-" and "WSA 15K-" was reduced to no alert.

In addition, proper operation of both TDWR--LLWAS primary and backup links were successfully verified. Analysis of the data indicates that there is still a problem whereby a good information frame is transmitted from the LLWAS master station through the RS-232 to RS-530 converter to the modem. This frame is either corrupted in the LLWAS modem, leased line, TDWR modem, or a combination thereof because when it reaches the TDWR Junction Box it has been transformed into an aborted frame.

OT&E Subelement: NAS End-to-End Performance

Test Objective: To ensure the TDWR system can operate in a full-up configuration (with all available internal and external interfaces) and can provide reliable, useable, and suitable weather products to controllers in a timely manner.

Test Participants: ACT-320; AOS-250; ASO-452; Memphis, Denver, Kansas City, and Orlando Air Traffic and Airway Facilities

Data Collection and Analysis Method: Monitored system performance, logged system failures and downtime.

Test Description/Results:

During OT&E test periods in Memphis (TA4 to TA6), Kansas City (TA8), and Orlando (TA10), ACT-320 allowed the system to operate for extended periods of time with all internal interfaces and LLWAS II or LLWAS III. ACT-320 monitored system performance and ensured the TDWR provided useable data to users.

Detailed test results related to end-to-end performance are highlighted in the following tests: NAS System Integration, Reliability/Availability, Human Factors and Weather Performance.

OT&E Subelement: Reliability/Availability

Test Objective: To determine that the TDWR can operate reliably within specification and be available to provide weather information.

Test Participants: ACT-320; AOS-250; ASO-452; ACE-452; AAC-944; AML-426; Memphis, Houston, Denver, Kansas City, and Orlando Air Traffic and Airway Facilities; NSSL

Data Collection and Analysis Method: Record operating time and failure data, including downtime; calculate MTBF and MTBCF.

Test Description/Results:

No official reliability testing was performed in Oklahoma City (TA1). However, during the 10-week test period, the TDWR system performed poorly in the areas of system reconfiguration, system stability, and powerfail recovery. The TDWR system also performed poorly in Oklahoma City (TA2) and Houston (TA3). ACT-320 therefore felt an official system reliability test was justified.

ACT-320 monitored system reliability over the 6-week reliability test and ATC evaluation period in Memphis (TA4). In particular, ACT-320 kept track of system performance and system downtime to determine TDWR MTBF and MTBCF. MTBF and MTBCF figures for the 6-week period were 63 hours (specification = 550 hours) and 112 hours (specification = 1500 hours), respectively. An antenna motor failure and several unwarranted RPG/RMS Harris computer reboots were identified as critical reliability issues.

During the 6-week period, sporadic red Xs (which normally indicate the TDWR is not in an operational mode) were displayed on the tower and Terminal Radar Approach Control (TRACON) GSDs. A communication link problem between the TDWR site and the tower building was identified to be the cause and was subsequently corrected.

Also during the 6-week period, the tower GSD displayed a Gust Front (GF) over the airport

intersecting all active runways. The appropriate GSD ARENAs were highlighted but no RDT alarm was issued. Inspection of base data showed that the GF should have sounded an alarm on the RDT. This underestimation by the Gust Front Detection Algorithm (GFDA) may indicate that the GFDA may need refinement.

Software and hardware fixes, designed to improve system reliability, were implemented prior to ACT-320's reliability retest in Memphis (TA5). During the 4-week retest period, ACT-320 again monitored system performance and determined the MTBF to be 170 hours and the MTBCF to be 227 hours. Of the three critical failures, two were RPG/RMS Harris computer reboots. The Memphis Harris computer had historically been problematic and was replaced in May 1994. ACT-320 recognized that the results obtained during this retest and previous tests may not have been representative of a typical TDWR system.

Finally, ACT-320 monitored the TDWR system during Build 5A and Build 5B OT&E test periods in Memphis (TA6), Denver (TA7 and TA9), Kansas City (TA8), and Orlando (TA10) to ensure the Build 5 enhancements did not degrade system reliability. ACT-320 determined that neither Build 5A nor Build 5B degraded system reliability.

OT&E Subelement: Degraded Operations

Test Objective: To determine the acceptability of the resultant operational degradation when failures are induced in the system.

Test Participants: ACT-320; AOS-250; ASO-452; Memphis, Denver, Kansas City, and Orlando Air Traffic and Airway Facilities

Data Collection and Analysis Method: Monitored the MDT to verify link status, monitored the GSDs and RDTs for display verification.

Test Description/Results:

ACT-320 successfully conducted this test in Memphis (TA6) during Build 5A OT&E. ACT-320 used operational scenarios to verify TDWR response to TDWR--LLWAS failure modes; these scenarios included the following:

a. TDWR and LLWAS operational,

b. TDWR operational and LLWAS non-operational,

c. TDWR non-operational and LLWAS operational,

d. TDWR and LLWAS non-operational.

The TDWR was put in maintenance mode to produce the "TDWR non-operational" state. The LLWAS--RPG and LLWAS--DFU connections were interrupted to produce a "LLWAS non-operational" state. In Denver and Orlando (TA7, TA9, TA10), LLWAS III was put in system support state to simulate a "LLWAS non-operational" state.

This test passed; the system responded properly to TDWR--LLWAS failure scenarios and link communication interruptions. It should be noted however, that should the LLWAS--TDWR primary link fail, LLWAS wind information will be lost.

ACT-320 successfully conducted this test in Denver (TA7) and Kansas City (TA8) using the aforementioned scenarios. The system

responded properly to TDWR--LLWAS failure scenarios and link communication interruptions. In particular, in Denver, no RDT rebuilding problems were observed while operating under the backup link, as had previously been reported during on-site Design Test and Evaluation (DT&E).

ACT-320 again successfully conducted this test in Denver (TA9) using the aforementioned operational scenarios. The system responded properly to TDWR--LLWAS failure scenarios and link communication interruptions. In particular, ACT-320 successfully verified that 9s were indeed displayed on the GSDs and RDTs when the LLWAS link time-out period exceeded the maximum limit (45 seconds). ACT-320 also successfully verified proper back-up link operation during these degraded scenarios.

Finally, ACT-320 successfully conducted this test in Orlando (TA10) during Build 5B OT&E. The system responded properly to TDWR--LLWAS failure scenarios and link communication interruptions. However, the programmable alarm timeouts were not verified because the Orlando TDWR configuration did not include tower and TRACON audible alarm boxes. However, these alarm timeouts were previously verified in Denver (TA7).

OT&E Subelement: Stress and NAS Loading

Test Objective: To estimate or determine the levels of stress and NAS loading provided by the operational environment.

Test Participants: ACT-320; AOS-250; Memphis, Denver, and Orlando Air Traffic and Airway Facilities

Data Collection and Analysis Method: Monitored GSDs and RDTs to verify display accuracy and monitored MDT to monitor system status.

Test Description/Results:

ACT-320 conducted this test during the Build 5A OT&E in Memphis (TA6). ACT-320 used a weather scenario test tape, developed by AOS-250, to stress the TDWR system. This test tape consisted of level 6 precipitation, wind shear, microbursts, and gust fronts. ACT-320 played the TDWR scenario test tape and monitored the TRACON and tower GSDs and RDTs for display and alarm/alert accuracy. (LLWAS was in a live state because there was no capability to run a scenario tape in LLWAS II systems.) All 10 lines of each RDT were used to display products to further stress the TDWR system.

The test was successfully completed; the expected weather phenomena and alerts/alarms messages were accurately displayed on the GSDs and RDTs.

ACT-320 also conducted this test in Denver (TA7). Again, ACT-320 used a weather scenario test tape, developed by AOS-250, to stress the TDWR system. ACT-320 played the TDWR and LLWAS weather scenario test tapes, and monitored the TRACON and tower GSDs and RDTs for display and alarm/alert accuracy. During test conduct, the CF wind product (displayed on line 10 of each RDT) did not update even though the time (also on line 10) and all RDT threshold winds updated properly. (The CF wind product displayed a constant 180 10G35.) ACT-320 LLWAS personnel identified this as a procedural problem associated with a switch to the backup link. Denver AT and AF personnel are aware of this problem and

have procedures in place to minimize its impact. In addition, ACT-320 observed a 3- to 4-second delay between the time an expected alert appeared on a TRACON RDT and the time the expected alert appeared on tower RDT #7. This problem was associated with the GSD/RDT daisy chain configuration. Again, Denver AT and AF personnel are aware of this problem.

ACT-320 conducted this test during the Build 5B OT&E in Orlando (TA10). Again, ACT-320 used TDWR and LLWAS weather scenario test tapes, developed by AOS-250 and ACT-320, respectively, to stress the TDWR system. ACT-320 played the weather scenario test tape, and monitored the TRACON and tower GSDs and RDTs for display and alarm/alert accuracy. All 10 lines of each RDT were used to display products to further stress the TDWR system. The data collected during the test were compared against expected results and proved to be accurate.

OT&E Subelement: Human Factors

Test Objective: To evaluate the interaction of air traffic controllers and supervisors with the TDWR in the operational environment.

Test Participants: ACT-320; ASO-452; Oklahoma City, Memphis, and Houston Air Traffic; NSSL

Data Collection and Analysis Method: Statistical analysis was performed on Air Traffic Controller responses to questionnaire.

Test Description/Results:

During the initial OT&E in Oklahoma City (TA1), Oklahoma City air traffic controllers favorably evaluated the GSD and RDT with respect to the displays and their layout of the products. However, these controllers did not operationally use the TDWR and its products. Therefore, a formal ATC evaluation was conducted in Memphis (TA4).

The AT Evaluation component of the TDWR OT&E Operational test was accomplished by using a questionnaire. The primary purpose of this evaluation was to determine the operational suitability and effectiveness of the TDWR in detecting and displaying hazardous weather products in and around the airport area. A secondary purpose was to evaluate the effectiveness of TDWR in the management of air traffic in the terminal area through the forecast and display of gust front induced wind shifts.

Fifty-two controllers, supervisors, and staff specialists (41 controllers, 8 supervisors and 3 staff specialists) were briefed on the contents of the TDWR Questionnaire prior to the start of the 21-day TDWR AT Evaluation. Two sections of the questionnaire were designed to determine the operational suitability and effectiveness of both the GSD and the RDT; each section contained numerical value questions and yes/no questions. Comments were encouraged. The third section consisted of general open-ended questions with respect to the overall TDWR system.

Build 4+, a "patch" to existing TDWR software that displays the LLWAS Center Field Wind (CFW) data on the RDT, was installed and utilized for the ATC Evaluation.

Of the AT personnel who received the questionnaire briefing, 28 (54%) returned completed questionnaires. Overall, there was a favorable response to the TDWR. Results and comments are presented by evaluation category below.

	Favorable	Neutral	Undecided	Unfavorable
GSD	76%	15%	5%	4%
RDT	77%	8%	7%	8%
System	89.5%	-	3.5%	7%

Additional response analysis is included in the Quick Look Report dated September 1993.

With the introduction of Build 5A, another ATC Evaluation was necessary to evaluate the added functionalities of Build 5A and their impact on the AT community. This evaluation was conducted in Memphis (TA6).

Air Traffic Control Specialists (ATCS) and supervisors were trained on the Build 5A enhancement prior to the ATC Evaluation. Again, a questionnaire was used to evaluate the effectiveness, suitability, and useability of the Build 5A enhancements from the perspective of the ATCSs and supervisors. The questionnaire was divided into three sections to evaluate the Build 5A enhancement with respect to the RDT, the GSD, and the enhancement in general.

ACT-320 was available to answer user questions, and demonstrated Build 5A enhancements. In addition, ACT-320 monitored and observed tower and TRACON ATCSs and supervisors while using the integrated TDWR--LLWAS data.

Twenty evaluators completed and returned the questionnaire during the 7-day ATC Evaluation. Overall, there was a favorable

response to the Build 5A enhancement. Results are presented by evaluation section below.

	Favorable	Neutral	Unfavorable
RDT	53%	27%	20%
GSD	66%	29%	5%
General	37%	37%	26%

Additional response analysis is included in the Quick Look Report dated June 1994.

Memphis air traffic controllers expressed a concern with referring to LLWAS winds as "threshold winds" per TDWR documentation, when, in fact, the wind sensors are located from 4,000 to 4,800 feet from the runway. "Boundary winds" was a preferable term to refer to this wind information.

Finally, ACT-320 had planned to conduct a Build 5B OT&E Human Factors Evaluation but was unable to because of scheduling conflicts in Orlando (TA10).

OT&E Subelement: Safety

Test Objective: To estimate or determine the degree to which the TDWR meets personnel safety requirements.

Test Description:

Test Participants: ACT-320, ACT-330, AOS-250, AMH-400

Data Collection and Analysis Method: Gather information related to personnel safety by means of walk-throughs, inspections, and personnel experiences.

Test Description/Results:

The Labor Relations and Occupational Safety Division, AMH-400, conducted a safety walk-through of the Oklahoma City facility (TA1) and revealed potential deficiencies in pedestal-related fall hazards. One such hazard was the absence of pedestal ladder safety climbing devices. AOS-250 and AND-420 have initiated an action plan to correct pedestal-related safety issues, with particular emphasis on pedestal ladder safety and meeting Occupational Safety and Health Administration (OSHA) standards.

The Communications and Infrastructure Branch, ACT-330, performed Lightning Protection and Grounding Surveys in Houston (TA4) and Oklahoma City (TA2) to verify compliance of these facilities to FAA standards. ACT-330 identified several grounding system problems and lightning protection deficiencies which have since been resolved.

OT&E Subelement: Maintainability

Test Objective: To determine that the TDWR system is maintainable utilizing TIBs.

Test Participants: ACT-320; AOS-250; ASO-452; Eastern, Southern, and Southwest Regions

Data Collection and Analysis Method: To recommend changes to TIBs; input site latitude/longitude into solar measurement routine.

Test Description/Results:

Test team members initially reviewed the TDWR TIBs in Oklahoma City (TA1). The alignment procedures and removal/replacement procedures of each TIB (System, Transmitter, Antenna, etc.) were performed and the flow paths of the Software Users Manual for the RMS Software were verified at the MDT. Procedure deviations and recommended changes were prepared as SRs.

Test team members reviewed updated versions of the TIBs for procedure accuracy in Houston (TA3) and provided suggested procedural changes. Thereafter, AOS-250 took the responsibility for verifying later versions of the TIBs.

The solar measurement test (sun track), included in the TDWR System TIB, was used to determine TDWR pointing accuracy. ACT-320 and AOS-250 conducted solar measurement tests first in Houston (TA3) and later in Memphis (TA5). Results of the Houston test indicated that both the procedure and the software routine were incorrect. After subsequent procedure and routine rework, ACT-320 and AOS-250 were able to successfully conduct the solar measurement test in Memphis.

OT&E Subelement: Site Adaptation Data

Test Objective: To ensure that site data unique to each site has been correctly developed, updated, and installed in the system.

Test Participants: ACT-320, AOS-250

Data Collection and Analysis Method: MDT screens were collected to be compared against site survey reports when available.

Test Description/Results:

This test was conducted in Oklahoma City (TA1), Memphis (TA6), Denver (TA7 and TA9), Kansas City (TA8), and Orlando (TA10). ACT-320 collected TDWR MDT Performance and Computational Parameters Screens, as well as antenna stow position and site latitude and longitude, to ensure unique site data.

Specifically, Antenna, Channel A and B, Data Processor, and DFU Performance Screens and the Computational Parameters Screen were collected to determine the software version number of the various TDWR components. These data will be compared against site survey reports when they become available.

OT&E Subelement: Security

Test Objective: To develop the baseline security model for completing the FAA required SAC for TDWR, to evaluate and/or develop standard practices and procedures for required security controls and countermeasures, and to ensure compliance with DRR issues.

Test Participants: ACT-320, AOS-250, ASO-700, AND-420, ASO-452, Memphis Airway Facilities

Data Collection and Analysis Method: Data were gathered from system documentation, training manuals, performance analyses, and system experts who represented a cross-section of system technicians, administrators, program managers, and security specialists.

Test Description/Results:

This assessment reviewed potential TDWR hazards and their assessed probability of occurrence and severity on TDWR operations and air traffic operations in the area. Also, this assessment covered very general hazard areas that could affect operations and was limited only to security hazards, while excluding hazards that had already undergone review (e.g. back-up power, uninterruptible power supply, air conditioning, lightning protection).

ASO-700 conducted a review of existing physical, technical, and procedural controls designed to mitigate the effects of the identified hazards, and compared the potential hazards with identified countermeasures to determine the existence of significant security vulnerabilities that may require corrective action in terms of additional technical, physical, and procedural security controls.

Assessment findings were extensive and, therefore, are not included in this Final Report. Assessment findings are included in the TDWR SAC and Accreditation Documentation, prepared by the Investigations and Internal Security Branch of the FAA Civil Aviation Security Division, ASO-700. This

documentation is available from ACT-320 or ASO-700 (telephone 404-305-6801).

OT&E Subelement: Transition Switchover

Test Objective: To estimate or determine that the TDWR system and procedures are such that a move from the old system to the new or vice versa can be accomplished without degrading NAS operations while minimizing the impact on the user.

Test Participants: ACT-320; ASO-452; Memphis, Denver, Kansas City, and Orlando Air Traffic and Airway Facilities

Data Collection and Analysis Method: Monitored MDT and GSDs and RDTs for system response.

Test Description/Results:

The transition switchover from Build 4 (baseline stand-alone TDWR system) to Build 4+ (which displayed LLWAS centerfield wind data on the TDWR RDT) and vice versa were tested in Memphis (TA4). Build 4+ consisted of a software build and connectivity between TDWR and LLWAS through a DFU serial port. The transition switchover was successfully accomplished with minimal impact on the user.

The transition switchover from Build 4+ to Build 5A (which interfaced the TDWR with LLWAS II) and vice versa was also tested in Memphis (TA6) using approved test procedures. Build 5A consisted of a software build and connectivity between the TDWR RPG and LLWAS and connectivity between the TDWR DFU and LLWAS. The transition switchover was successfully accomplished with minimal impact on the user.

The transition switchover from stand-alone TDWR (using Build 5B) and LLWAS systems to an integrated TDWR--LLWAS system and vice versa was tested in Denver (TA7) using approved test procedures. The difference between the integrated TDWR--LLWAS system and the stand-alone systems included a software build and connectivity between the TDWR RPG and LLWAS and connectivity between the TDWR DFU and LLWAS. The transition switchover was successfully accomplished with minimal impact on the user.

No transition switchover tests were needed for Oklahoma City (TA1 and TA2), Kansas City (TA8), and Orlando (TA10) because OT&E tests were conducted on these systems immediately after installation and, therefore, there was no old system from which to transition.

OT&E Subelement: Weather Performance

Test Objective: An Investigative Panel (IP), a group of expert radar meteorologists from the National Center for Atmospheric Research (NCAR), MIT/Lincoln Laboratory, and NSSL was to verify that the TDWR met operational suitability and reliability requirements in relation to its ability to detect hazardous weather; to assess the quality of the base data; to verify that appropriate alarms were disseminated according to system design; to determine the performance of the automated weather detection algorithms; and to evaluate a set of NAS-SS-1000 requirements.

Test Participants: ACT-320, AOS-250, NSSL, NCAR, MIT/Lincoln Laboratory

Data Collection and Analysis Method: Record base data and archive weather products; determine true events by analyzing base data; compare archived weather products to true events; determine hits, misses, and false alarms; perform statistical analysis on algorithm performance.

Test Description/Results:

The TDWR Weather Performance was originally evaluated in Oklahoma City (1992, TA1). Although limited data were collected for algorithm performance evaluation, several goals were accomplished: the base velocity and reflectivity data were of good quality, RDT alarms were timely and accurately represented algorithm detections, and the set of NAS-SS-1000 requirements were verified.

Several issues were identified during 1992 Oklahoma City testing: excess clutter residue breakthrough, difficulty in clutter residue editing map (CREM) generation, attenuation flagging, excessive gust front false alarms and misses, excessive microburst false alarms, and questionable microburst shape parameters.

The lack of data collected in Oklahoma City (1992) necessitated additional testing during the spring of 1993 in Oklahoma City (TA2). To ensure valid analyses of the Microburst

Detection Algorithm (MDA) and GFDA, goals for data collection and algorithm analysis were set at 300 microburst and 100 gust front events. These expectations were greatly exceeded; 880 microburst and 256 gust front events were collected.

Algorithm evaluation included determination of hits, misses, and false alarms, all based on comparison of ground truth determined by meteorologists and detections produced by the radar algorithms. Performance statistics were given in terms of Probability of Detection (POD) and False Alarm Ratio (FAR) for both the MDA and GFDA. The MDA had a POD of 93% (system requirement = 90%) and FAR of 18% (design goal = 10%). There were a number of detections by the MDA whose validity could not be ascertained with certainty. These detections were often in areas of weak divergence that may have been magnified by spurious data points. In addition, there were a significant number of false alarms due to range folding. The IP recommended proposed remedies for microburst false alarms, the implementation of which had the potential to reduce the FAR to an acceptable value. These recommendations were tested as part of AOS-250 Build 5B OT&E Shakedown testing. AOS-250 test results are included in the AOS-250 TDWR Build 5B OT&E Shakedown Quick Look Report.

Scored on an event-by-event basis, the GFDA had a POD of 66% and a FAR of 24%. While there is no system requirement on gust fronts, these figures are unacceptable. The predominant reasons for misses and false detections were range folding and dealiasing errors, respectively. While there are no short-term solutions, continued long-term research may result in more robust range de-obscuration editing techniques and better dealiasing techniques, including various multiple-pulse repetition frequency approaches. Also, there were several false detections in the presence of vertical wind shear. A possible remedy would be to add a technique to the algorithm to recognize and remove the false alarms based on the knowledge that vertical wind shear exists.

APPENDIX C

TDWR TEST VERIFICATION

REQUIREMENTS TRACEABILITY MATRIX (TVRTM)

Table C-1. TDWR Test Verification Requirements Traceability Matrix (TVRTM)

REQ ID	NAS-SS-1000 Paragraph	Description	DT&E	Build 4	Build 5A	Build 5B
	3.2.1.1.1.1	Air traffic control functional characteristics. The NAS shall provide air traffic control services to the user/specialist , as follows:				
1001	3.2.1.1.1.1.I	Disseminate aeronautical/weather data to the user that directly affects flight operations;	X	D	D	D
	3.2.1.1.4.1	Weather functional characteristics. The NAS shall provide weather services to the user/specialist, as follows:				
1002	3.2.1.1.4.1.B	Collect and/or sense weather information that pertains to the area of NAS responsibility for terminal and en route operations;	X	D	D	D
1003	3.2.1.1.4.1.D	Provide tabular and pictorial displays of weather information to support the specialists;	X	D	D	D

Verification Method: T=Test; D=Demonstration; A=Analysis; I=Inspection; X=Not Applicable; Q=Not Available in the NAS

[1] - Deferred to ACT-330
[2] - To be accomplished as part of Weather Processing Test

Table C-1. TDWR Test Verification Requirements Traceability Matrix (TVRTM)

REQ ID	NAS-SS-1000 Paragraph	Description	DT&E	Build 4	Build 5A	Build 5B
1004	3.2.1.1.4.1.G	Classify weather information as hazardous which may impact flight operations;	X	D	D	D
1005	3.2.1.1.4.1.H	Alert the specialists when hazardous weather or NOTAM information is received;	X	D	D	D
1006	3.2.1.1.4.1.I	Disseminate weather and NOTAM information to NAS specialists and users in support of flight operations;	X	D	D	D
1007	3.2.1.1.4.1K	Generate weather products which support the interpretation of weather conditions by NAS specialists and users;	X	D	D	D
1008	3.2.1.1.4.1.N	Archive weather information for use in event reconstruction and accident investigation;	X	D	D	D
1009	3.2.1.1.8.1.3	Data and voice archiving. The NAS shall provide data and voice recording and playback capabilities for archiving and reconstruction purposes.	X	D	D	D

Verification Method: T=Test; D=Demonstration; A=Analysis; I=Inspection; X=Not Applicable; Q=Not Available in the NAS

[1] - Deferred to ACT-330
[2] - To be accomplished as part of Weather Processing Test

Table C-1. TDWR Test Verification Requirements Traceability Matrix (TVRTM)

REQ ID	NAS-SS-1000 Paragraph	Description	DT&E	Build 4	Build 5A	Build 5B
	3.2.1.2.4	Weather performance characteristics. The NAS shall provide services to the user/specialist for weather and NOTAM information.				
1010	3.2.1.2.4.A.1	A. The NAS shall acquire weather and NOTAM information as follows: 1. Detect the current surface weather conditions at selected airports at least once every minute;	X	D	D	D
1011	3.2.1.2.4.A.2.B	2. Detect the current weather conditions aloft at least once every 5 minutes for all airspace within the NAS area of responsibility as follows: b. Terminal: Shall be from ground level to 10,000 feet AGL within 45 nmi of designated airports.	X	D	D	D

Verification Method: T=Test; D=Demonstration; A=Analysis; I=Inspection; X=Not Applicable; Q=Not Available in the NAS

[1] - Deferred to ACT-330

[2] - To be accomplished as part of Weather Processing Test

Table C-1. TDWR Test Verification Requirements Traceability Matrix (TVRTM)

REQ ID	NAS-SS-1000 Paragraph	Description	DT&E	Build 4	Build 5A	Build 5B
1012	3.2.1.2.4.B.1.A	B. The NAS shall disseminate weather and NOTAM information as follows: 1. Weather information classified as hazardous or potentially hazardous weather information; a. Terminal: Within one minute from the time NAS receives the hazardous weather information.	X	D	D	D
1013	3.2.1.2.4.C.4.A	C. The NAS shall maintain weather and NOTAM information as follows: 4. Maintain hazardous weather information until the hazard has dissipated. Expired hazardous weather information shall be purged when the hazard no longer exists, no longer affects or has the potential to affect the safe and efficient movement of aircraft within: a. One minute for terminal operations;	X	D	D	D

Verification Method: T=Test; D=Demonstration; A=Analysis; I=Inspection; X=Not Applicable; Q=Not Available in the NAS

[1] - Deferred to ACT-330

[2] - To be accomplished as part of Weather Processing Test

Table C-1. TDWR Test Verification Requirements Traceability Matrix (TVRTM)

REQ ID	NAS-SS-1000 Paragraph	Description	DT&E	Build 4	Build 5A	Build 5B
1014	3.2.1.2.4.E.1	E. The NAS shall perform all processing required to produce and/or complete a description of the current, trend, or predicted weather conditions by: 1. Deriving from raw data the products needed by NAS specialists and users;	X	D	D	D
1015	3.2.1.2.4.E.2	2. Using automated weather detection systems;	X	D	D	D
1016	3.2.1.2.4.F.2	F. The NAS shall construct a real-time depiction of the weather conditions which affects, or has the potential to affect, the safe and efficient movement of aircraft: 2. Includes the current condition and near-term predictions of the following: thunderstorm location and intensity, precipitation areas, cloud coverage, cloud tops, icing levels, turbulence, winds aloft, clear air turbulence, low level wind shear, and areas of IFR, MVFR, and VFR;	X	D	D	D

Verification Method: T=Test; D=Demonstration; A=Analysis; I=Inspection; X=Not Applicable; Q=Not Available in the NAS

[1] - Deferred to ACT-330

[2] - To be accomplished as part of Weather Processing Test

Table C-1. TDWR Test Verification Requirements Traceability Matrix (TVRTM)

REQ ID	NAS-SS-1000 Paragraph	Description	DT&E	Build 4	Build 5A	Build 5B
1017	3.2.1.2.4.F.3	3. At 5 minute intervals to provide for at least 20 minutes advanced warning of sustained wind shifts to the NAS specialists for use in planning airport operations;	X	D	D	D
1018	3.2.1.2.4.F.4	4. Allowing user/specialist to receive at least a one (1) minute warning prior to the existence of hazardous weather data (i.e., microburst, gust front) in the terminal area.	X	D	D	D
1019	3.2.1.2.4.G	G. The NAS shall archive all weather information in accordance with section 3.2.1.2.8.3;	XT	I	I	I

Verification Method: T=Test; D=Demonstration; A=Analysis; I=Inspection; X=Not Applicable; Q=Not Available in the NAS

[1] - Deferred to ACT-330
[2] - To be accomplished as part of Weather Processing Test

Table C-1. TDWR Test Verification Requirements Traceability Matrix (TVRTM)

REQ ID	NAS-SS-1000 Paragraph	Description	DT&E	Build 4	Build 5A	Build 5B
1020	3.2.1.2.8.4.B	NAS time standard performance characteristics. The NAS shall provide a standard time signal as follows: B. A system dealing with non-ATC functions (e.g., maintenance, weather, traffic management, flight planning) shall be synchronized to within 6 seconds of UTC;	X	D	D	D
1021	3.2.1.2.8.4.C	C. The NAS shall provide interfacing capabilities to the coded time signal and synchronization in accordance with Volumes II through V of NAS-SS-1000;	X	D	D	D

Verification Method: T=Test; D=Demonstration; A=Analysis; I=Inspection; X=Not Applicable; Q=Not Available in the NAS

[1] - Deferred to ACT-330
[2] - To be accomplished as part of Weather Processing Test

Table C-1. TDWR Test Verification Requirements Traceability Matrix (TVRTM)

REQ ID	NAS-SS-1000 Paragraph	Description	DT&E	Build 4	Build 5A	Build 5B
3001	3.2.1.2.5.1.1	The TDWR shall receive wind/wind shear products from the low-level wind shear alert system (LLWAS).	T	X	T	T
	3.2.1.2.5.1.2	The TDWR shall identify the presence of the following weather: a. Microburst; b. Gust front; c. Precipitation; d. Storm motion.				
3002	3.2.1.2.5.1.2a	Identify weather phenomena - Microburst	T	D	D	D
3003	3.2.1.2.5.1.2b	Identify weather phenomena - Gust Front	T	D	D	D
3004	3.2.1.2.5.1.2c	Identify weather phenomena - Precipitation	T	D	D	D
3005	3.2.1.2.5.1.2d	Identify weather phenomena - Storm motion	Q	Q	Q	Q

Verification Method: T=Test; D=Demonstration; A=Analysis; I=Inspection; X=Not Applicable; Q=Not Available in the NAS

[1] - Deferred to ACT-330
[2] - To be accomplished as part of Weather Processing Test

Table C-1. TDWR Test Verification Requirements Traceability Matrix (TVRTM)

REQ ID	NAS-SS-1000 Paragraph	Description	DT&E	Build 4	Build 5A	Build 5B
	3.2.1.2.5.1.3	The TDWR shall measure and make estimates of the following: a. Reflectivity; b. Mean radial velocity; c. Spectrum width.				
3006	3.2.1.2.5.1.3a	Measure weather phenomena - Reflectivity	T	D	D	D
3007	3.2.1.2.5.1.3b	Measure weather phenomena - Mean radial velocity	T	D	D	D
3008	3.2.1.2.5.1.3c	Measure weather phenomena - Spectrum width	T	D	D	D
	3.2.1.2.5.1.4	The TDWR shall analyze return radar signals to determine the following: a. Type of weather; b. Location of weather; c. Velocity of weather; d. Severity of weather; e. Direction of storm movement.				
3009	3.2.1.2.5.1.4a	Weather data processing - Type of weather	T	D	D	D

Verification Method: T=Test; D=Demonstration; A=Analysis; I=Inspection; X=Not Applicable; Q=Not Available in the NAS

[1] - Deferred to ACT-330

[2] - To be accomplished as part of Weather Processing Test

Table C-1. TDWR Test Verification Requirements Traceability Matrix (TVRTM)

REQ ID	NAS-SS-1000 Paragraph	Description	DT&E	Build 4	Build 5A	Build 5B
3010	3.2.1.2.5.1.4b	Weather data processing - Location of weather	T	D	D	D
3011	3.2.1.2.5.1.4c	Weather data processing - Velocity of weather	T	D	D	D
3012	3.2.1.2.5.1.4d	Weather data processing - Severity of weather	T	D	D	D
3013	3.2.1.2.5.1.4e	Weather data processing - Direction of storm movement	Q	Q	Q	Q
	3.2.1.2.5.1.5	The TDWR shall generate the following weather products: a. Microburst map; b. Microburst message/alarm; c. Gust front map; d. Gust front message/alarm; e. Precipitation map; f. Storm motion map.				
3014	3.2.1.2.5.1.5a	Generate weather products - Microburst map	T	D	I	I
3015	3.2.1.2.5.1.5b	Generate weather products - Microburst message/alarm	T	D	D	D
3016	3.2.1.2.5.1.5c	Generate weather products - Gust front map	T	D	I	I

Verification Method: T=Test; D=Demonstration; A=Analysis; I=Inspection; X=Not Applicable; Q=Not Available in the NAS

[1] - Deferred to ACT-330
[2] - To be accomplished as part of Weather Processing Test

Table C-1. TDWR Test Verification Requirements Traceability Matrix (TVRTM)

REQ ID	NAS-SS-1000 Paragraph	Description	DT&E	Build 4	Build 5A	Build 5B
3017	3.2.1.2.5.1.5d	Generate weather products - Gust front message/alarm	T	D	D	D
3018	3.2.1.2.5.1.5e	Generate weather products - Precipitation map	T	D	I	I
3019	3.2.1.2.5.1.5f	Generate weather products - Storm motion map	Q	Q	Q	Q
	3.2.1.2.5.1.5.1	The TDWR shall integrate data from LLWAS to provide an integrated output. The TDWR shall: a. Receive LLWAS wind and wind shear products; b. Generate TDWR microburst and gust front alert and maps as in the TDWR stand-alone configuration (see 3.2.1.2.5.1.5); c. Validate LLWAS generated microburst/wind shear with loss information using TDWR wind shear information; d. Merge TDWR and LLWAS maps and alert to reduce redundancy; and e. Transmit LLWAS wind shear with gain and winds products upon receipt from LLWAS.				
3020	3.2.1.2.5.1.5.1a	LLWAS data integration - Receive		X	X	T

Verification Method: T=Test; D=Demonstration; A=Analysis; I=Inspection; X=Not Applicable; Q=Not Available in the NAS

[1] - Deferred to ACT-330
[2] - To be accomplished as part of Weather Processing Test

Table C-1. TDWR Test Verification Requirements Traceability Matrix (TVRTM)

REQ ID	NAS-SS-1000 Paragraph	Description	DT&E	Build 4	Build 5A	Build 5B
3021	3.2.1.2.5.1.5.1b	LLWAS data integration - Generate		X	T	T
3022	3.2.1.2.5.1.5.1c	LLWAS data integration - Validate		X	X	X[2]
3023	3.2.1.2.5.1.5.1d	LLWAS data integration - Merge		X	X	X[2]
3024	3.2.1.2.5.1.5.1e	LLWAS data integration - Transmit		X	X	X[2]
3025	3.2.1.2.5.1.6	The TDWR shall generate alert messages indicating the presence of microburst or gust front when prespecified threshold conditions occur.		T	D	D
3026	3.2.1.2.5.1.7	The TDWR shall disseminate products and alarm messages to the TCCC.	Q	Q	Q	Q
3027	3.2.1.2.5.1.8	The TDWR shall implement the RMS functional characteristics as specified in Volume I, Appendix III of the NAS-SS-1000.	X	X[1]	X[1]	X[1]
3028	3.2.1.2.5.1.9	The TDWR shall be capable of supplying operational status.		D	D	D
3029	3.2.1.2.5.1.10	The TDWR shall accept and process operational control commands from valid external sources.		D	D	D

Verification Method: T=Test; D=Demonstration; A=Analysis; I=Inspection; X=Not Applicable; Q=Not Available in the NAS

[1] - Deferred to ACT-330
[2] - To be accomplished as part of Weather Processing Test

Table C-1. TDWR Test Verification Requirements Traceability Matrix (TVRTM)

REQ ID	NAS-SS-1000 Paragraph	Description	DT&E	Build 4	Build 5A	Build 5B
3030	3.2.1.2.5.1.11	The TDWR shall receive and maintain timing synchronized to universal coordinated time to support system recording and maintenance and distribution of products.	X	D	D	D
3031	3.2.1.2.5.1.12	The TDWR shall provide the capability to disseminate weather products and alarm messages to additional subsystems and support future interfaces.	X	X	X	X
	3.2.1.2.5.2	The TDWR shall meet the following performance characteristics:				
3032	3.2.1.2.5.2.1	The TDWR shall detect hazardous weather phenomena between 0 and 360 degrees in azimuth, between .25 and 48 nmi in range, and from 0 to 24,000 feet AGL.		T	D	D

Verification Method: T=Test; D=Demonstration; A=Analysis; I=Inspection; X=Not Applicable; Q=Not Available in the NAS

[1] - Deferred to ACT-330
[2] - To be accomplished as part of Weather Processing Test

Table C-1. TDWR Test Verification Requirements Traceability Matrix (TVRTM)

REQ ID	NAS-SS-1000 Paragraph	Description	DT&E	Build 4	Build 5A	Build 5B
	3.2.1.2.5.2.2	The TDWR shall have the following resolutions: a. Azimuth: 1 degree; b. Range: 150 meters; c. Elevation 0.5 degree for elevations less than or equal to 3.0 degrees; 1 degree for elevations above 3.0 degrees.				
3033	3.2.1.2.5.2.2a	Resolution - Azimuth	T	X	X	X
3034	3.2.1.2.5.2.2b	Resolution - Range	T	X	X	X
3035	3.2.1.2.5.2.2c	Resolution - Elevation	T	X	X	X
	3.2.1.2.5.2.3	The TDWR shall have the following accuracies: a. Azimuth: Error shall not exceed .05 degree over the entire detection envelope; b. Range: Error shall not exceed 50 meters. c. Elevation: Error shall not exceed .05 degree.				
3036	3.2.1.2.5.2.3a	Accuracy - Azimuth	T	X	X	X
3037	3.2.1.2.5.2.3b	Accuracy - Range	T	X	X	X

Verification Method: T=Test; D=Demonstration; A=Analysis; I=Inspection; X=Not Applicable; Q=Not Available in the NAS

[1] - Deferred to ACT-330
[2] - To be accomplished as part of Weather Processing Test

Table C-1. TDWR Test Verification Requirements Traceability Matrix (TVRTM)

REQ ID	NAS-SS-1000 Paragraph	Description	DT&E	Build 4	Build 5A	Build 5B
3038	3.2.1.2.5.2.3c	Accuracy - Elevation	T	X	X	X
3039	3.2.1.2.5.2.4	The TDWR shall be capable of detecting a - 10.0 dBz range bin and beam filling target with signal-to-noise ratio of 6 Db at a range of 16 nmi.	T	X	X	X
3040	3.2.1.2.5.2.5	The TDWR shall be capable of operating within the frequency band of 5.60 gigahertz (GHz) to 5.65 GHz.	T	T	X	X
	3.2.1.2.5.2.6	The TDWR shall be capable of providing weather data continuously while operating under the following scanning strategies: a. 360 degrees azimuth scans; b. Azimuth sector scans; c. Range height indicator scan.				
3041	3.2.1.2.5.2.6a	Scanning strategies - 360 degrees	T	T	D	D
3042	3.2.1.2.5.2.6b	Scanning strategies - Azimuth sector scans	T	T	D	D
3043	3.2.1.2.5.2.6c	Scanning strategies - Range height indicator scan	T	T	D	D

Verification Method: T=Test; D=Demonstration; A=Analysis; I=Inspection; X=Not Applicable; Q=Not Available in the NAS

[1] - Deferred to ACT-330
[2] - To be accomplished as part of Weather Processing Test

Table C-1. TDWR Test Verification Requirements Traceability Matrix (TVRTM)

REQ ID	NAS-SS-1000 Paragraph	Description	DT&E	Build 4	Build 5A	Build 5B
3044	3.2.1.2.5.2.7	The TDWR shall be capable of archiving 15 days of derived products.	T	X	X	T
3045	3.2.1.2.5.2.8	The TDWR shall generate and distribute a microburst or gust front alarm within 25 seconds from collection of data.	T	T	X	D
3046	3.2.1.2.5.2.9	The TDWR shall provide weather data to specialists that is no older than 1 minute.	T	T	X	D
3047	3.2.1.2.5.2.9.1	The TDWR shall distribute wind data within 10 seconds of receipt of data.	T	T	X	X
3048	3.2.1.2.5.2.10	The TDWR shall disseminate data to the following destination (maximum): TCCC and location quantity is 1.	Q	Q	Q	Q
3049	3.2.1.2.5.2.11	The TDWR shall meet the maintenance monitoring performance characteristic as specified in 3.2.1.1.1.2 of volume V of the NAS-SS-1000.	X	X[1]	X[1]	X[1]

Verification Method: T=Test; D=Demonstration; A=Analysis; I=Inspection; X=Not Applicable; Q=Not Available in the NAS

[1] - Deferred to ACT-330
[2] - To be accomplished as part of Weather Processing Test

Table C-1. TDWR Test Verification Requirements Traceability Matrix (TVRTM)

REQ ID	NAS-SS-1000 Paragraph	Description	DT&E	Build 4	Build 5A	Build 5B
	3.2.1.2.5.2.12	Weather data shall be categorized into 6 levels of intensity as follows: a. Six level monitoring: The six levels shall be designated as one through six as follows: 1. Level 1: 18=< dBz< 30; 2. Level 2: 30=< dBz< 41; 3. Level 3: 41=< dBz< 46; 4. Level 4: 46=< dBz< 50; 5. Level 5: 50=< dBz< 57; 6. Level 6: dBz= >57. b. No data display shall be made for dBz values less than 18; c. Storm motion: The storm motion product shall be generated for Level 2 or greater weather and include the direction and speed that the storm is moving.				
3050	3.2.1.2.5.2.12a	Weather processing performance - Six level monitoring	T	T	D	D

Verification Method: T=Test; D=Demonstration; A=Analysis; I=Inspection; X=Not Applicable; Q=Not Available in the NAS

[1] - Deferred to ACT-330
[2] - To be accomplished as part of Weather Processing Test

Table C-1. TDWR Test Verification Requirements Traceability Matrix (TVRTM)

REQ ID	NAS-SS-1000 Paragraph	Description	DT&E	Build 4	Build 5A	Build 5B
3051	3.2.1.2.5.2.12b	Weather processing performance - No data display	T	T	D	D
3052	3.2.1.2.5.2.12c	Weather processing performance - Storm motion	Q	Q	Q	Q
	3.2.1.2.5.3	The TDWR shall interface functionally and physically as shown in Figure 3.2.1.2.5.3-1. The TDWR functional interfaces are defined in Table 3.2.1.2.5.3-1.				
3053	3.2.1.2.5.3a	Functional/physical interfaces - LLWAS–TDWR	D	X	T	T
3054	3.2.1.2.5.3b	Functional/physical interfaces - MDT–TDWR	T	T	T	T
3055	3.2.1.2.5.3c	Functional/physical interfaces - TDWR–MDT	T	T	T	T
3056	3.2.1.2.5.3d	Functional/physical interfaces - MPS–TDWR		X[1]	X[1]	X[1]
3057	3.2.1.2.5.3e	Functional/physical interfaces - TDWR–MPS		X[1]	X[1]	X[1]
3058	3.2.1.2.5.3f	Functional/physical interfaces - TCCC–TDWR		Q	Q	Q
3059	3.2.1.2.5.3g	Functional/physical interfaces - TDWR–TCCC		Q	Q	Q

Verification Method: T=Test; D=Demonstration; A=Analysis; I=Inspection; X=Not Applicable; Q=Not Available in the NAS

[1] - Deferred to ACT-330
[2] - To be accomplished as part of Weather Processing Test