COPY 2

Report No. FAA-ED-14-2A

'78

ENGINEERING AND DEVELOPMENT PROGRAM PLAN – TERMINAL/TOWER CONTROL

LIBRARY
FEB 12 '79

November 1978

Document is available to the U.S. public through
the National Technical Information Service,
Springfield, Virginia 22161.

U.S. DEPARTMENT OF TRANSPORTATION
FEDERAL AVIATION ADMINISTRATION
Systems Research & Development Service
Washington, D.C. 20590

NOTICE

This document is disseminated under the sponsorship of the Department of Transportation in the interest of information exchange. The United States Government assumes no liability for its contents or use thereof.

APPROVED: _____
DIRECTOR, SYSTEMS RESEARCH AND DEVELOPMENT SERVICE

APPROVED: _____
ASSOCIATE ADMINISTRATOR FOR ENGINEERING AND DEVELOPMENT

Technical Report Documentation Page

1. Report No.	2. Government Accession No.	3. Recipient's Catalog No.
FAA-ED-14-2A		

4. Title and Subtitle	5. Report Date
Engineering and Development Program Plan Terminal/Tower Control	November 1978
	6. Performing Organization Code FAA, SRDS
7. Author(s) ATC Systems Division, SRDS, FAA, DOT	8. Performing Organization Report No.
9. Performing Organization Name and Address U.S. Department of Transportation Federal Aviation Administration System Research and Development Service Washington, D.C. 20590	10. Work Unit No. (TRAIS)
	11. Contract or Grant No.
12. Sponsoring Agency Name and Address U.S. Department of Transportation Federal Aviation Administration System Research and Development Service Washington, D.C. 20590	13. Type of Report and Period Covered Program Plan Fiscal Year 1978 through 1982
	14. Sponsoring Agency Code FAA, DOT

15. Supplementary Notes

16. Abstract

This document sets forth the engineering and development plan for FAA E&D Program 14, TERMINAL/TOWER CONTROL. The plan covers the relationship of Program 14 to the overall E&D effort, defines the purpose, scope and direction of the program, and describes the major technical elements of the program.

The plan is intended to provide guidance to personnel charged with carrying out development activities under Program 14 and to provide a tool for the continuing management and control of these activities. The plan will also serve as a basis for estimating the funds required and for seeking approval of budgets.

This issue of the plan supersedes Report No. FAA-ED-14-2, Engineering and Development Program Plan - Terminal/Tower Control, April 1973.

17. Key Words	18. Distribution Statement
Program Plan Terminal/Tower Control Engineering and Development Automated Radar Terminal System	Document is available to the public through the National Technical Information Service, Springfield, Virginia 22151

19. Security Classif. (of this report)	20. Security Classif. (of this page)	21. No. of Pages	22. Price
Unclassified	Unclassified		

Form DOT F 1700.7 (8-72) Reproduction of completed page authorized

METRIC CONVERSION FACTORS

Approximate Conversions to Metric Measures

Symbol	When You Know	Multiply by	To Find	Symbol
		LENGTH		
in	inches	*2.5	centimeters	cm
ft	feet	30	centimeters	cm
yd	yards	0.9	meters	m
mi	miles	1.6	kilometers	km
		AREA		
in^2	square inches	6.5	square centimeters	cm^2
ft^2	square feet	0.09	square meters	m^2
yd^2	square yards	0.8	square meters	m^2
mi^2	square miles	2.6	square kilometers	km^2
	acres	0.4	hectares	ha
		MASS (weight)		
oz	ounces	28	grams	g
lb	pounds	0.45	kilograms	kg
	short tons (2000 lb)	0.9	tonnes	t
		VOLUME		
tsp	teaspoons	5	milliliters	ml
Tbsp	tablespoons	15	milliliters	ml
fl oz	fluid ounces	30	milliliters	ml
c	cups	0.24	liters	l
pt	pints	0.47	liters	l
qt	quarts	0.95	liters	l
gal	gallons	3.8	liters	l
ft^3	cubic feet	0.03	cubic meters	m^3
yd^3	cubic yards	0.76	cubic meters	m^3
		TEMPERATURE (exact)		
°F	Fahrenheit temperature	5/9 (after subtracting 32)	Celsius temperature	°C

*1 in = 2.54 (exactly). For other exact conversions and more detailed tables, see NBS Misc. Publ. 286, Units of Weights and Measures, Price $2.25, SD Catalog No. C13.10:286.

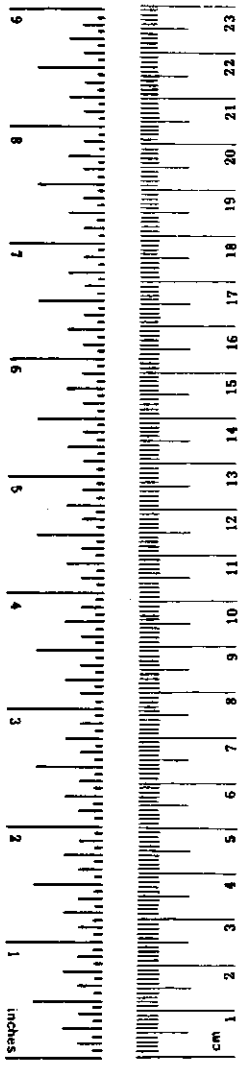

Approximate Conversions from Metric Measures

Symbol	When You Know	Multiply by	To Find	Symbol
		LENGTH		
mm	millimeters	0.04	inches	in
cm	centimeters	0.4	inches	in
m	meters	3.3	feet	ft
m	meters	1.1	yards	yd
km	kilometers	0.6	miles	mi
		AREA		
cm^2	square centimeters	0.16	square inches	in^2
m^2	square meters	1.2	square yards	yd^2
km^2	square kilometers	0.4	square miles	mi^2
ha	hectares (10,000 m^2)	2.5	acres	
		MASS (weight)		
g	grams	0.035	ounces	oz
kg	kilograms	2.2	pounds	lb
t	tonnes (1000 kg)	1.1	short tons	
		VOLUME		
ml	milliliters	0.03	fluid ounces	fl oz
l	liters	2.1	pints	pt
l	liters	1.06	quarts	qt
l	liters	0.26	gallons	gal
m^3	cubic meters	35	cubic feet	ft^3
m^3	cubic meters	1.3	cubic yards	yd^3
		TEMPERATURE (exact)		
°C	Celsius temperature	9/5 (then add 32)	Fahrenheit temperature	°F

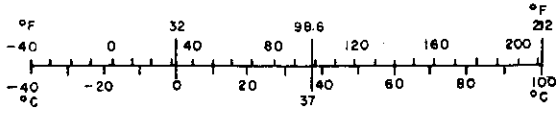

FOREWORD

1. PURPOSE. This program plan provides the definition of the development program for the terminal air traffic control portion of the National Airspace System. The plan defines the goals, general approach, development activities, schedules and resource requirements for the development program.

2. CONTENTS. The Terminal/Tower Control program encompasses developments relative to the acceptance, processing, distribution, and display of flight plan, control, surveillance and environmental data, and the airspace utilization and control procedures applicable to terminal/tower operations. The program is closely coupled to developments in many other E&D programs, and therefore, their relationships are discussed in this plan.

TABLE OF CONTENTS

		Page
1	INTRODUCTION	1-1
2	BACKGROUND AND GENERAL REQUIREMENTS	2-1
3	PURPOSE, SCOPE AND ORIENTATION OF THE PROGRAM	3-1
	3.1 Purpose	3-1
	3.2 Scope	3-1
	3.3 Objectives	3-1
	3.4 Phasing	3-3
4	FACTORS INFLUENCING TERMINAL SYSTEM CONFIGURATIONS AND E&D ACTIVITIES	4-1
	4.1 General	4-1
	4.2 Terminal Environments	4-2
	4.3 Functional Requirements	4-5
	4.4 Terminal Processing and Display Systems	4-10
5	RELATIONSHIP WITH OTHER ENGINEERING AND DEVELOPMENT PROGRAMS	5-1
	5.1 Introduction	5-1
	5.2 Program 01 - System	5-1
	5.3 Program 02 - Radar	5-3
	5.4 Program 03 - Air Traffic Control Radar Beacon System (ATCRBS)	5-3
	5.5 Program 04 - Navigation	5-4
	5.6 Program 05 - Airborne Separation Assurance	5-5
	5.7 Program 06 - Communications	5-6
	5.8 Program 07 - Landing Systems	5-6
	5.9 Program 08 - Airport/Airside	5-7
	5.10 Program 11 - ATC Systems Command Center Automation	5-10
	5.11 Program 12 - En Route Control	5-11
	5.12 Program 13 - Flight Service Stations	5-12
	5.13 Program 15 - Weather	5-13
	5.14 Program 16 - Technology	5-14
	5.15 Program 21 - Support	5-15
6	PROGRAM STRUCTURE AND ALLOCATION OF TECHNICAL DEVELOPMENT EFFORTS	6-1
	6.1 Subprogram Structure	6-1

TABLE OF CONTENTS
(Continued)

		Page
6.2	Program Planning and System Engineering (Subprogram 142-121)	6-2
6.3	ARTS III Expansion (Subprogram 142-171)	6-4
6.4	ARTS II Enhancements (Subprogram 142-175)	6-11
6.5	Terminal Information Processing System (TIPS) (Subprogram 142-173)	6-13
6.6	Metering and Spacing (Subprogram 142-172)	6-18
6.7	Conflict Alert and Resolution (Subprogram 142-174)	6-26
6.8	ATC Applications of Data Link (Subprogram 142-176)	6-31
6.9	Advanced System Design (Subprogram 142-178)	6-33
6.10	Terminal Automation Test Facility (TATF) (Subprogram 142-179)	6-34
6.11	Sustaining Engineering (Subprogram 144-170)	6-36
7	IMPLEMENTATION CONSIDERATIONS AND TRANSITION OF MANAGEMENT RESPONSIBILITIES	7-1
7.1	General	7-1
7.2	Field Implementation Packages	7-1
7.3	Transition of Management Responsibilities	7-2
7.4	Package Interdependencies	7-4
7.5	Training Considerations	7-4
APPENDIX A:	TIME-PHASING OF PRINCIPAL TASKS	A-1
APPENDIX B:	ESTIMATED PROGRAM FUNDING REQUIREMENTS	B-1

LIST OF ILLUSTRATIONS

		Page
FIGURE 4-1:	APPLICATION OF TERMINAL PROCESSING AND DISPLAY SYSTEMS TO TERMINAL ENVIRONMENTS	4-12
TABLE 4-1:	CURRENT DEPLOYMENT OF FAA OPERATED TRACON/TRACAB AND CONTROL TOWER FACILITIES BY TYPE OF TERMINAL ENVIRONMENT	4-6
TABLE 4-2	FUNCTIONAL REQUIREMENTS	4-7

1. INTRODUCTION

This program plan covers FAA Engineering and Development Program 14, TERMINAL/TOWER CONTROL. It provides the definition of the development program for the terminal air traffic control portion of the National Airspace System*. The product of this development program will be terminal ATC improvements which, if implemented, will improve the safety, capacity and efficiency of the terminal ATC system.

The plan defines the goals, general approach, development activities, schedules and resource requirements for the development program. The document is organized as follows:

- Section 2 summarizes aspects of FAA's overall ATC system upgrading efforts bearing on the engineering and development activities undertaken in the Terminal/Tower Control Program.
- Section 3 presents the purpose, scope and objectives of the Terminal/Tower Control Program and identifies the general areas of emphasis associated with each of two major phases.
- Section 4 sets forth the general characteristics of various categories of terminal environments and associated functional requirements that influence determination of the basic types of data processing and display systems appropriate to satisfy the varied needs of terminal facilities. It also identifies these basic systems (which are further defined in Section 6) and illustrates their application to facilities in the various terminal environments.

---

* The development program for Airport Surface Traffic Control (ASTC) was recently moved from Program 08, Airport/Airside, to Program 14. A project plan covering activities leading to the generation of an Engineering and Development Program Plan for the Tower Automated Ground Surveillance System (TAGS) portion of the overall ASTC effort is contained in DOT/FAA/SRDS, *Project Plan: Tower Automated Ground Surveillance System Development Program*, Report No. FAA-RD-78-4, January 1978.

- Section 5 describes activities included in other E&D programs that have interface or other design implications on development activities included in the Terminal/Tower Control Program.
- Section 6 describes the structure of the technical program and identifies the required development activities allocated to the individual subprograms.
- Section 7 identifies the organizations responsible for development and for field implementation and describes the shift in responsibilities during the transition of products from development to implementation programs. It also points out some of the more pertinent factors to be considered by implementation planners.
- Appendix A presents the schedule for the technical program.
- Appendix B presents the resources required to carry out the technical program.

2. BACKGROUND AND GENERAL REQUIREMENTS

A continuing evolutionary approach is being taken to develop and implement improvements to the National Airspace System. With this approach, changes in the basic nature of the operational system are introduced in increments over successive time periods or "generations". The third generation level of capability including the computer-based semi-automatic radar air traffic control systems of basic NAS Stage A (en route) and basic ARTS (terminal) is now in operation.

In order to meet the anticipated traffic demands of the 1980's at acceptable levels of safety and without introducing intolerable delays to the system users, a substantial upgrading of the third generation air traffic control system is in process. The engineering and development work leading to timely availability of this upgraded capability is the current challenge of the development programs.

Efforts to achieve the capabilities for upgrading the system are distributed among a number of E&D programs, including the Terminal/Tower Control Program. These programs are oriented towards the common objectives of providing system capacity to meet the expected growth of air traffic, controlling costs, and maintaining or improving the present level of safety. These programs have been substantiated as economically beneficial in a cost/benefit study conducted by the FAA.[1]

The problems to be faced in the E&D programs involve significant technical, operational and physical factors. These factors include the limitations and constraints of technology, human performance, and environmental elements which need to be overcome in the process of achieving the E&D program goals.

The primary system factors to be addressed include:

- The ability to reliably and accurately detect all aircraft positions and movements in densely populated airspace and on airport surfaces.

1. Policy Analysis of the Upgraded Third Generation Air Traffic Control System. By Fromme and Rogers, FAA-AVP-77-3, Jan. 1977

- The capacity of the system to safely handle increasing numbers of aircraft.
- The ability of users (pilots, aircraft, airborne systems) to respond to control instructions and navigate with the precision required to maximize traffic flows.
- The ability to predict and avoid (or possibly alter) the effects on aircraft of physical phenomena such as weather and wake vortices.
- The need to implement fuel conservation measures compatible with the objectives to increase capacity and maintain safety.
- The constraints of airport geometries affecting capacities.

The factors above are closely related in that major improvements in system performance can only be achieved through realization of improvements in all the areas. The overall E&D effort is thus intended to address all of the areas through the various technical programs.

The concepts embodied in the general E&D approach are to effect:

- Substantial improvements in the quantity, reliability and accuracy of surveillance data and the timeliness of critical ground-air-ground communications through application of a discrete address beacon system (DABS) with digital message up-down link capabilities.
- More extensive use of automation to
  - Reduce the number and difficulty of tasks required of the human controller thereby increasing efficiency and controller productivity.
  - Alert controllers to potential aircraft conflicts and aid them in decisions concerning conflict resolution thereby improving system safety.
  - Aid controllers in planning aircraft movements and con-

trolling the flow of traffic into and out of major airports thereby improving capacity, reducing delays and conserving fuel.

- Provide greater continuity in the automatic exchange of flight plan and control data between both control positions and control facilities thereby improving system efficiency and productivity.

- Substantial improvements in the accuracy of navigation guidance during the landing phase and on airport surfaces through the introduction of improvements to navigation aids, the addition of a new approach and landing guidance system with associated avionics, and a system for semi-automatic control of airport ground movements.

- Reductions in constraints of airport geometry by devising layout improvements to aid local authorities in construction planning.

- Improvements in detectability and predictability (and possibly alterability) of weather and wake vortices and in the distribution of weather information to control facilities.

While undertaking an overall E&D effort toward attainment of these capabilities, it is recognized that all cannot be achieved at the same time. It is also recognized that operational needs can not await the development of all solutions before any improvements are implemented. The E&D program is therefore oriented to providing improvementa in a series of incremental steps that lead to realization of the full capabilities in an evolutionary manner.

For convenience of reference in planning and carrying out the necessary development activities, these steps are generally characterized as falling into two major phases in which

- Phase I consists of improvements which can be implemented

without awaiting the realization of major new subsystems or other long lead time items such as DABS, MLS, etc., and,

- Phase II is comprised of improvements which are contingent upon the capabilities afforded by the major new subsystems.

In addition to the general requirements implicit in the mainstream E&D effort, special requirements expressed in Forms 9550-1, "Request for RD&E Effort", are periodically received from the operating services (see paragraph 6.11).

3. PURPOSE, SCOPE AND ORIENTATION OF THE PROGRAM

3.1 Purpose

The purpose of the Terminal/Tower Control Program is to develop the capabilities applicable to terminal radar control facilities and airport traffic control towers in consonance with the overall ATC system upgrading efforts. A corollary purpose is to continually assess the adequacy of implemented improvements in terms of safety, capacity, utility and performance and devise fixes to rectify deficiencies encountered in day-to-day operation of TRACON and tower facilities.

3.2 Scope

This program encompasses developments relative to the acceptance, processing, distribution, and display of flight plan, control, surveillance and environmental data, and the airspace utilization and control procedures applicable to terminal/tower operations.

The program is closely coupled to developments in many of the other E&D programs in that the hardware, software and procedures developed for TRACON and tower facilities must be compatible with the performance capabilities of related subsystems (radar, beacon, communications, navigation, approach and landing, ground control and guidance, and weather) and with other air traffic facilities (Air Route Traffic Control Centers, Central Flow Control Facility and Flight Service Stations). Program relationships with other E&D programs are discussed in Section 5.

3.3 Objectives

The general objectives of the Terminal/Tower Control Program are to develop improvements in system capabilities to achieve safety, productivity and capacity benefits that will apply across the range of TRACON and tower facilities. The program is intended to expand and improve the system's data processing and display capabilities, improve reliability, develop advanced automation functions, and provide

certain additional foundation capabilities necessary to support other E&D programs. The basic approach to the objectives is to develop hardware and software functions that are adaptable, expandable and offer a range of capabilities so that system enhancements can be applied appropriately to terminal facilities of different size.

Specific objectives of the program are to:

1. *Improve system safety through the development of new automation functions to alert controllers of impending aircraft conflicts and aid in the resolution of conflicts.*

2. *Improve system safety by increasing the reliability of the ARTS III data processing system through the addition of computer modules and the development of fail safe/fail soft capabilities.*

3. *Improve system safety and capacity by expanding the ARTS III tracking function to cover non-beacon equipped aircraft and improving the overall reliability and accuracy of tracking through the use of primary radar data to supplement beacon data.*

4. *Improve system productivity through the development of new hardware/software capabilities reducing the number and difficulty of terminal controller tasks involved in the access and dissemination of flight and control data in TRACONS and control towers.*

5. *Improve system capacity through the development of automation aids to support controllers in the sequencing, metering and spacing of traffic arriving and departing high activity airports.*

6. *Improve system capacity and productivity through the development of a digital radar display to provide greater display reliability and capacity, improve display clarity and res-*

olution, allow operations in higher ambient light conditions, facilitate the composite display of surveillance data from multiple radar sites and provide flexibility to reconfigure operating positions and facilities.

7. *Reduce operating and maintenance costs by developing a digital radar data remoting capability leading to the elimination of costly broadband radar remoting equipment.*

8. *Develop the concepts, functional requirements and hardware/software to interface with external systems under development such as the wake vortex advisory and prediction systems, the semi-automatic airport surface traffic control system and the discrete address beacon and data link system.*

In addition to the objectives described above, the program has a continuing requirement to support the operating services in the diagnosis and correction of in-service problems experienced with operational equipment.

3.4 Phasing

Phase I efforts are keyed to characteristics and capabilities of current vintage subsystems (ATCRBS, radar, communication, navigation, and approach and landing) as enhanced by improvements developed in each of the respective areas. The general approach involves a more extensive application of automation to assist in the performance of such functions as:

- Transfer/distribution of flight information and control coordination data within and between facilities.
- Establishment and maintenance of correlation between flight plan and control data and sensor-derived position data.
- Sequencing and spacing of arriving and departing flights and metering the arrival/departure flow.

- The prediction and avoidance of hazardous proximity of aircraft to each other and of aircraft to obstructions, severe weather and protected airspace boundaries.

Phase II emphasis is on interfacing with and realizing maximum advantages from the substantially increased capabilities of major new subsystems such as DABS, with its ground-air-ground digital data link, and the new microwave landing system (MLS), with its capability for curved approaches and more precise navigation. While the general areas of automation assistance will remain substantially the same as those cited for Phase I, the degree of assistance will be considerably increased and significant changes will be required in the method of accomplishment, i.e., the distribution of functions and the manner in which they are performed.

As the system is more extensively automated, there will be increased dependence upon automated features. Therefore, there will be an increasing degree of concurrent effort to achieve appropriate increases in reliability and maintainability.

4. FACTORS INFLUENCING TERMINAL SYSTEM CONFIGURATIONS AND E&D ACTIVITIES

4.1 General

From an ATC system viewpoint, a terminal environment generally includes from 1 to 20 or more airports that receive approach control services from a common terminal air traffic control facility. (Note: In the case of airports that are relatively isolated from established terminal environments and which have little IFR flight plan traffic, approach control services are often provided by the ARTCC having jurisdiction over the area.)

Of the airports served by the terminal approach control facility, from 1 to 10 or more may be equipped with control towers providing airport traffic control services at the busier airports. The approach control facility may be equipped to provide radar control services with surveillance inputs from 1 to 4 radar sites and may be configured to provide these services from operating positions located in a separate terminal radar control room (TRACON) or located within the control tower cab (TRACAB). At some locations where IFR flight plan activity is not excessive and the arrangement is more advantageous than having the service provided from the ARTCC, non-radar approach control service may be provided from operating positions located in the control tower cab.

From the above, it may be seen that there is considerable variation in the configuration and complexity of the operational environments to be served by terminal ATC systems. Additional variations are brought about by differences in the activity levels experienced and services provided. Thus, in the design and development of systems to serve these environments, implementation and O&M costs rule against an approach that would call for the application of one, maximum capability system to all environments. Similarly, development, logistics and training costs rule against a unique design and system for each TRACON and tower. The most cost effective approach obviously lies somewhere

in between, i.e., several basic types of systems/subsystems that can be configured and tailored to meet the individual needs of the various facilities and which can be upgraded, to some degree, through modular expansion so as to delay the need for system replacement when activity levels increase. It is this approach that is being applied in FAA's implementation program and is being pursued in the terminal development efforts that are a part of this program.

4.2 Terminal Environments

For E&D purposes, it is useful to view terminal environments and facilities as fitting into several general categories based on similarities in characteristics that influence the size, complexity and cost of the supporting systems and the E&D approach to upgrading efforts. This classification facilitates the identification of relative orders of system capabilities and performance required and serves to guide the structuring and emphasis of activities carried out in the terminal development program. These categories, as viewed in the terminal E&D program, consist of (1) Medium to High Density Environments, (2) Low to Medium Density Environments, and (3) Low Density Environments. It should be noted that the terms "low", "medium" and "high" are only gross generalizations of relative activity and are intended only as rough indicators of the comparitive need for upgraded capabilities in the various environments.

The principal characteristics of each type of environment bearing on the configuration and design of upgrading packages are as follow:

4.2.1 Medium to High Density Environment

This category is comprised of those terminal environments where terminal radar control services are provided from a TRACON equipped with ARTS III type data processing and display systems. Control facilities in these environments are characterized by the following:

- A TRACON facility providing terminal radar control service to one or more medium to high activity airports as well as lower activity airports.
- Control towers providing airport traffic control service at the medium to high activity airports and some of the lower activity airports served by the TRACON.
- Surveillance data provided to the TRACON from one or more radar/beacon sites.
- Local Controller surveillance displays in the control tower collocated with the TRACON and the need for such displays in other towers where the surveillance coverage is adequate to aid in performance of the local control function.
- Exchange of essential flight plan and control data on VFR and IFR flight plan traffic between the towers and the TRACON.
- Exchange of essential flight plan and control data on IFR flight plan traffic between the TRACON and the ARTCC.
- Potential future requirement for the exchange of essential flight plan and control data on VFR flight plan traffic between the TRACON and an automated FSS.
- Potential future requirement to exchange data with a semi-automatic airport surface traffic control system (ASTC) and a wake vortex avoidance system (WVAS) when these systems are available for installation at the high activity airports.

4.2.2 Low to Medium Density Environment

This category is comprised of the remaining terminal environments where terminal radar control services are provided from a TRACON or TRACAB. The majority of these facilities are currently being equipped with ARTS II type data processing and display systems. Control facilities in these environments are

characterized by the following:

- A TRACON (or TRACAB) providing terminal radar control service to one or more low to medium density airports.
- Control towers providing airport traffic control service at the medium density airport(s) and at some of the lower activity airports served by the TRACON/TRACAB.
- Surveillance data provided to the TRACON/TRACAB from one radar/beacon site.
- Local controller surveillance displays in the control tower collocated with the TRACON/TRACAB.
- Exchange of essential flight plan and control data on VFR and IFR flight plan traffic between the TRACON/TRACAB and the towers.
- Exchange of essential flight plan and control data on IFR flight plan traffic between the TRACON/TRACAB and the ARTCC.
- Potential future requirement to exchange essential flight plan and control data on VFR flight plan traffic between the TRACON/TRACAB and an automated FSS.

4.2.3 Low Density Environment

This category is comprised of those airports with control towers which are not served by a terminal radar approach control facility. Control facilities in these environments are characterized by the following:

- Conventional or radar approach/departure control service for IFR flight plan traffic provided by the ARTCC or conventional (non-radar) approach control service provided by the control tower.
- Airport traffic control service provided by the control tower.

- Exchange of essential flight plan and control data on IFR flight plan traffic between the control tower and the ARTCC.
- Potential future requirement to exchange essential flight plan and control data on VFR flight plan traffic between the control tower and an automated FSS.

The approximate number of FAA operated TRACON/TRACAB and control tower facilities currently in each of the three categories is presented in Table 4-1. These numbers indicate potential candidates for the functional capabilities and system configurations outlined in paragraphs 4.3 and 4.4 considering only the current deployment of TRACONS and towers.

4.3 Functional Requirements

General descriptions of the functional requirements of terminal ATC facilities that relate to data processing and display capabilities are contained in the following paragraphs. A summary of the requirements applicable to each terminal environment is presented in Table 4-2.

4.3.1 Radar/Beacon Surveillance

Radar/beacon surveillance is necessary to provide accurate, real-time position data for use in the separation and management of traffic at all high and medium density terminals and at selected lower density terminals. At a minimum, high brightness displays of tracks augmented by aircraft identity and altitude data are required at all TRACONS/TRACABS. In addition, it is desirable to provide surveillance data to all control towers serving airports where available radar coverage is adequate to enhance performance of the local control function. This extension of surveillance data to towers is deemed necessary to increase the safety of IFR/VFR operations in the vicinity of airports, to reduce delays inherent in non-radar IFR procedures, and to increase the traffic handling capacity of the local controller.

TABLE 4-1

CURRENT DEPLOYMENT OF FAA OPERATED TRACON/TRACAB AND CONTROL TOWER FACILITIES BY TYPE OF TERMINAL ENVIRONMENT

	Medium to High Density	*Low to Medium Density*	*Low Density*
TRACON/TRACAB	*63*	*105*	
*Local Towers**	*49*	*87*	*117*
Remote Towers within 15 miles of a terminal radar/-beacon system	*91*	*24*	
Other Remote Towers	*24*	*14*	

* *Local Towers are those located in the same building as the associated approach control facility. Remote Towers are those either located at another airport or at such a distance from the approach control facility as to require additional provisions for the remoting of data.*

TABLE 4-2

FUNCTIONAL REQUIREMENTS

Functional Requirements	*Medium to High Density*	*Low to Medium Density*	*Low Density*
Radar/Beacon Surveillance	all	all	none
Automated Transfer of Flight Data	all	all	all
Automated Transfer of Control Data	all	all	all (limited form)
Fail-Operational Provisions	Fail-Safe/Fail-Soft all Group I & II terminals. Fail-Soft or Redundancy, as required at all others.	Fail-Soft or Redundancy as required.	none
Metering & Spacing	All Group I terminals, others as required	none	none
Conflict Alert and Resolution	Alert & resolution all Group I terminals, alert all Group II terminals and limited alert at all others.	Limited alert as required.	none

Note: Group I refers to Group I Terminal Control Areas (TCAs)
Group II refers to Group II Terminal Control Areas (TCAs)

4.3.2 Automated Transfer of Flight Data

Flight data include flight plans, meteorological data, aeronautical data and flow control messages. Automated transfer of flight plans is necessary to assure timely availability of basic information needed for control as well as for real-time processing functions, e.g., track processing, metering and spacing, and conflict alert. For towers not covered by radar, flight data serve as the single means for interfacility coordination of traffic movement; automation is desirable to assure timely availability of flight information from and at these locations. Flight plan data automation is also needed to reduce the manual entry and inter-/intrafacility handling workload as well as to facilitate the recording of transactions. In planning for automated flight plan distribution, consideration will also be given to provisions for automated distribution of meteorological, aeronautical, flow control and other message traffic pertinent to operations at the various classes of terminals.

4.3.3 Automated Transfer of Control Data

Automated transfer of control data is necessary to maintain real-time continuity in the control of aircraft traversing sector and terminal jurisdictional boundaries and to increase the traffic handling capacity of controllers. Display handoffs of tracks correlated with aircraft identity and altitude data are required between ARTCCs and TRACONS. A display capability for indicating transfer of control actions is also needed between TRACONs and associated towers and between ARTCCs and towers located at airports that are not served by terminal radar control facilities.

4.3.4 Fail-Operational Provisions

Fail-operational provisions are essential to assure an acceptable level of continued service with flight safety in the event of system failure. The particular provisions needed vary depending upon the peak density of traffic to be processed in the terminal area and the degree of dependency on the automated system for continuous, safe air traffic control.

Three capability levels are envisioned, viz., Redundancy, Fail-Soft, and Fail-Safe/Fail-Soft. The Redundancy Level provides for spare equipment which can be manually brought on line to restore service. This level of backup is envisioned for the lower density terminals where the time interval required to manually restore essential services is not operationally unacceptable. The Fail-Soft Level provides for continuous system operation with reduced capacity by automatically discontinuing the least critical functions according to a predetermined order of priority. This level is envisioned for selected lower to medium density terminals. The Fail-Safe/Fail-Soft Level provides redundant equipment, automated switching, critical data storage for restoration of services, and automated fault detection and restart capability for near instantaneous resumption of full or reduced functional capabilities following most detected failures. This level is envisioned for selected medium to higher density terminals.

4.3.5 Metering and Spacing

To achieve higher runway utilization rates, automation assistance is needed to provide increased consistency and precision in the organization and delivery of aircraft operating into and out of high density airports. Metering and spacing automation serves to aid in determining (1) the rate at which aircraft may be

accomodated in the terminal area, (2) the appropriate sequence of flights in the arrival/ departure streams, and (3) the attainment of minimum intervals between operations in consonance with separation criteria. It also provides a source of current flight control (intent) data to enhance the performance of such other real-time processing functions as tracking and hazard assessment. The metering and spacing capability will be needed at all Group I terminals and may be required at other high and medium density airports as traffic increases.

4.3.6 Conflict Alert and Resolution

Automation capabilities are necessary to effectively project the air situation in future time and assess the alternatives available to (1) assure safe separation between aircraft operating in controlled airspace irrespective of whether the flights are operating under IFR or VFR, and (2) avoid the selection of a course of action that would place flights in dangerous proximity to other hazards such as terrain, obstructions, protected airspace boundaries, etc.

Conflict alert and resolution will provide automated means to (1) predict and alert controllers of potentially hazardous proximity of aircraft, (2) aid in the determination of resolution actions which do not, in themselves, create another hazard, and (3) aid in the generation and delivery of appropriate advisories and hazard avoidance instructions.

As a minimum, some form of hazard assessment and alerting is desired for all medium to high density terminals. Additionally, hazard resolution capabilities may be required at those locations where operations are conducted in airspace with high traffic density.

4.4 Terminal Processing and Display Systems

Based on the similarities and dissimilarities in the general character-

istics of terminal/tower control facilities and the capabilities required in each type of terminal environment, the Terminal/Tower Control Program is focused on the development of three basic types of hardware/software system configurations that are compatible with each other (as well as other interfacing systems) and are expandable and adaptable to provide the necessary range of capabilities. These system configurations are termed Expanded ARTS III (which includes subsystems for the provision of surveillance data to remote towers), ARTS II, and TIPS (Terminal Information Processing System). The application and interrelationship of these systems to support TRACON/-TRACAB and control tower requirements in each of the types of terminal environment is illustrated in Figure 4-1. Functional descriptions of the basic systems as well as planned enhancements may be found in paragraphs 6.3, 6.4 and 6.5.

FIGURE 4-1 APPLICATION OF TERMINAL PROCESSING AND DISPLAY SYSTEMS TO TERMINAL ENVIRONMENTS

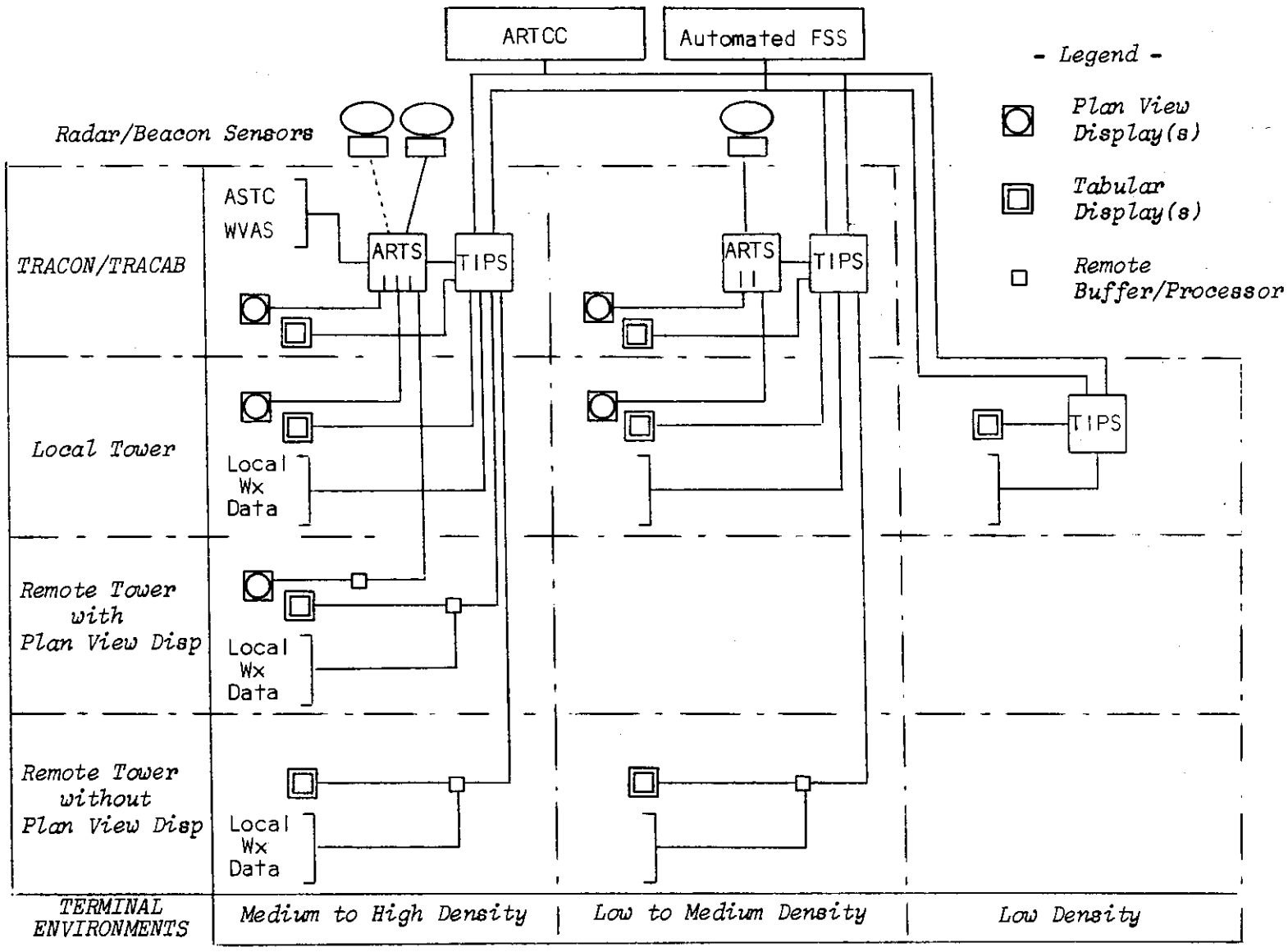

5. RELATIONSHIP WITH OTHER ENGINEERING AND DEVELOPMENT PROGRAMS

5.1 Introduction

The FAA Engineering and Development effort is distributed among 21 programs. The purpose of this program structure is to facilitate top management review of the various E&D activities in the context of the total E&D effort.

Generally, the efforts under each program represent a functional or technical grouping of highly related E&D activities. Broad, system-level engineering, requirements analysis and planning activities which cut across program areas are included in Program 01 - System. The System Program thus serves a capping function by providing for initial requirements analyses and establishment of overall design guidelines governing the general technical direction of engineering and development efforts.

The scope of each program, description of efforts included and relationship with other programs are delineated in the individual program plans. The nature of the relationship between activities carried out under one program and those carried out under another ranges from one of almost complete independence to one that is direct and dynamic, involving interfaces requiring absolute functional, logical, electrical and physical compatibility in design and performance. Overlaps, gaps or other inter-program incompatibilities are resolved during the course of continuing technical and administrative program reviews.

Those programs which include efforts that may have interface or design implications on the terminal E&D activities included in Program 14 are identified in the subsections that follow.

5.2 Program 01 - System

This program sets the overall development objectives and general approach of the total E&D effort. It provides the requirements analyses

and overall system engineering necessary for planning and integrating FAA research and development efforts into an improved national airspace system.

The program includes planning, requirements analyses, advanced concept studies and overall design activities leading to promulgation of design guidelines. Within the scope of this program are included evaluation of current ATC system performance, determination of overall performance requirements, development of long range research programs, and cost benefit studies of research and development programs and potential system changes. The program also includes the assessment of activity correlated system errors, system delays and accident data with system performance measures involving aircraft safety, controller productivity, and controller workload. Any necessary changes in system deaign resulting from these efforts will be reflected, as appropriate, in the mainstream design guidelines.

In the area of advanced concept investigations, a current activity having future interface/design implication with Terminal/Tower E&D efforts is the work being done to further the development of a concept for Automated Terminal Services (ATS) (see Report No. FAA-EM-76-6, A Description of the Phase I Automated Terminal Service Concept, dated November 1976). In brief, this concept envisions the automatic provision of essential terminal services at lower activity airports by the installation of a system comprised of a beacon surveillance subsystem, a mini-computer with appropriate operational software, a voice response subsystem and VHF transceivers. It is envisioned that such a system could delay the need for implementation of manned airport traffic control towers as traffic activity levels increase as well as provide additional safety at presently uncontrolled airports. Where systems of this nature were installed at airports having authorized instrument operations, a tie-in with the ATC facility having control of these operations is required. It is this aspect of the concept that has the most significant interface/design implications and will require close

coordination with the development activities in Program 14.

5.3 Program 02 - Radar

This program includes development of techniques and modifications to realize improvements in performance of in-service and subsequent production versions of primary radar sensors. Also included are such adaptation or new design activities as might be necessary to achieve compatibility between primary radar sensors and the Discrete Address Beacon System (DABS) (see Program 03).

The present Automated Radar Terminal System (ARTS III) makes provisions for interfacing with the following types of airport surveillance radars: ASR-3B, ASR-4, ASR-5, ASR-6, ASR-7 and ASR-8. The present display system interface is broadband analog; the interface with a digitizer for processing primary radar data is being developed in the terminal development program.

In Phase I efforts*, the interface between terminal radar sensors and terminal systems is direct and dynamic via a digital interface that includes moving target detection (MTD). For Phase II developments*, present design guidelines indicate primary radar data will be integrated with beacon derived data in the DABS system, thus the relationship between the Terminal/Tower Control and Radar Programs will be less direct, i.e., through Program 03, Air Traffic Control Radar Beacon System (ATCRBS).

5.4 Program 03 - Air Traffic Control Radar Beacon System (ATCRBS)

This program includes development of techniques and modifications to realize improvements in performance of in-service and subsequent production versions of beacon ground interrogation and receiving equip-

---

* The terms "Phase I" and "Phase II" appearing in this section refer to the broad phase characterization of the overall system upgrading efforts as reflected in paragraph 3.4.

ment and associated aircraft avionics. The program also includes design and development of the new DABS and associated avionics.

The present ARTS III interfaces with three types of beacon interrogators, viz., ATCBI-3, ATCBI-4, and ATCBI-5. Future interfaces are expected to be established with a later version ATCBI and with DABS. The present ARTS III display interface is broadband analog while the processing interface is via a digitizer.

In Phase I efforts, the interface between beacon interrogation and receiving equipment associated with terminal radar sensors and terminal systems is direct and dynamic via a digital interface that provides monopulse detection and processing. For Phase II development activities, the direct and dynamic relationship between the ATCRBS Program and the Terminal/Tower Control Program will continue. Present design guidelines indicate the interface of systems developed under each of the programs to be digital, computer-to-computer, two-way interface for the transfer of aircraft position data and up-down link messages. Analyses leading to more definitive guidelines regarding various configurations of the DABS system, the allocation of functions between DABS and ATC facility processors, and resultant information exchange requirements are being carried out under the System Program. Activities to develop DABS (see FAA-ED-03-1, Technical Plan for Discrete Address Beacon System) and for the integration of software to provide Automatic Traffic Advisory and Resolution Service (ATARS) capabilities (see paragraph 5.6) are being carried out in this program.

5.5 Program 04 - Navigation

This program includes the development of ground station and associated aircraft avionic improvements to increase the precision and flexibility of aerial navigation by electronic means. Since the capabilities afforded the pilot to independently determine the aircraft's position and make good a predetermined flight path have influence on the procedures and criteria employed in the control of air traffic, develop-

ment activities in this program that are expected to result in procedural or criteria changes are directly related and must be closely coordinated with the development efforts in Program 14. At present, the only effort of this nature in the Navigation Program is Area Navigation with principal interaction being the capabilities and limitations associated with its procedural application on the automation of terminal control functions.

5.6 Program 05 - Airborne Separation Assurance

The potential capability for predicting conflicts between aircraft exists in both the air environment and ground environment. Efforts pertaining to the airborne capabilities are carried out under Program 05. The current efforts underway in this program are related to the development of a beacon based system identified as BCAS. This system incorporates ranging on the basis of secondary radar replies which are either precipitated by ground interrogation, an air interrogation or both.

There are two approaches being pursued with respect to ground based collision avoidance. One of these utilizes the processing capability available within the DABS site processor to exercise the conflict prediction algorithm and is referred to as ATARS (Automatic Traffic Advisory and Resolution Service). The work to integrate this capability with other DABS functions is being carried out as an integral part of the DABS development effort under Program 03. The other approach is to use the processing capability of systems serving ground ATC facilities to predict conflicts and develop possible escape maneuvers. For ARTS III equipped terminal facilities, this approach is being pursued in Program 14 under Subprogram 142-174. The work necessary to evaluate interaction between either the BCAS or ATARS and the ARTS III conflict alert and resolution capabilities will be carried out as part of the Program 14 development activity.

5.7 Program 06 - Communications

This program includes activities to provide improvements to the voice and digital data communications switching and control systems for TRACONS and towers that permit continuous voice communications between pilots and air traffic controllers in addition to communications between ground positions within a common air traffic control facility or external facilities. Upgrading of the FAA's communications system is continuing in an evolutionary manner to handle the post-1980 automated environment. An integrated approach is being taken to the communications system design. This requires continuing coordination and liaison with the Terminal/Tower Control Program to assure that the reduced maintenance, greater safety, higher reliability and reduced cost objectives are met and to assure that the system architecture provides compatible interfaces with the automated functions being developed under Program 14.

In the area of digital data transfer between TRACONs, towers and other FAA facilities, the National Airspace Data Interchange Network (NADIN), presently being designed, will provide the capability to transfer digital data to meet existing communications needs as well as for modular expansion to meet future requirements. The terminal components of NADIN will be provided in the first enhancement package. Continuing liaison is required to assure that all functional capabilities now available are provided and that adequate provisions are made to accomodate future requirements stemming from terminal development activities.

5.8 Program 07 - Landing Systems

This program includes efforts to improve the performance of conventional Instrument Landing Systems (ILS) to achieve Category I, II and III capabilities at a large number of the more difficult sites. Also included are the efforts to develop the new Microwave Landing System (MLS) and associated avionics.

For Phase I, efforts are oriented to realization of approach and landing capabilities at problem sites in lower ceiling/visibility conditions (see FAA-ED-07-1, ILS Improvement Plan). Activities are addressed to reducing site-induced problems affecting signal in space performance and monitoring to detect course deteriorations. The only potential impact of these activities on terminal/tower development efforts now appears to be in the area of status monitoring required of the control facility. Conceivably, the facility configuration and work station design could be affected.

For Phase II, activities are directed toward development of the MLS (see FAA-ED-07-2, National Plan for Development of the Microwave Landing System). In addition to providing substantial improvement in instrument landing capability at a variety of airports, this system is intended to provide precise guidance signals to facilitate simultaneous instrument approaches to closely spaced parallel runways and to permit (with appropriate airborne processing) the use of flexible (selectable and curved) flight paths. There are no plans at this time for a direct hardware interface between MLS and the terminal control system. Nonetheless, exploitation of the flexible path capability to increase capacity and/or achieve noise reduction/redistribution is directly dependent on the applications made by the control system. Additionally, the minimum runway spacing for simultaneous instrument approaches as well as the concept and methods for control system monitoring of such operations are closely related to the capabilities and characteristics of MLS. Therefore, there is a direct and interacting relationship between activities in the MLS development effort and activities in the Terminal/Tower Control Program, particularly in the area of operational application.

5.9 Program 08 - Airport/Airside

This program includes efforts intended to increase attainable airport capacities with various airport geometries and to improve layouts in order to reduce limiting effects on airport surface movements. Ex-

amples include dual lane and close spaced parallel runways, high speed runway exits/entrances, and interconnecting taxi networks. Also included is the design and development of a semi-automatic airport surface traffic control system*, and efforts to minimize problems associated with aircraft wake turbulence.

Since the control of aircraft departing and approaching the airport and aircraft operating on the airport surface is accomplished by terminal/tower facilities, operating concepts and procedures associated with landings, takeoffs and airport ground traffic movement are directly related to and interact with terminal/tower development activities. It is expected that the Airport Surface Traffic Control (ASTC) development effort will include devices to be located in control towers which will have to be considered in facility configuration and work station design. In addition, it is expected that there will be a requirement for a direct interface and information exchange (e.g., flight identification, present position, destination on airport) between the ASTC automation system and the terminal/tower automation system. Further insight on the nature of this interface and what data exchange is required is expected to result from experimental design efforts being carried out in the ASTC program.

The wake turbulence efforts fall in two general areas. One area of work has the objective to reduce the severity of wakes generated by aircraft either by modifications to existing aircraft designs or by new design approaches. The second area of work has the objective to predict the location and intensity of wakes in such a manner that those constituting a hazard can be avoided. It is the latter of these two

---

* This airport surface traffic control development effort has recently been transferred to Program Element 143 (Subprogram 143-103). A project plan, leading to the generation of an E&D Program Plan for development of the system, is contained in DOT/FAA/SRDS, *Project Plan: Tower Automated Ground Surveillance System Development Program*, Report No. FAA-RD-78-4, January 1978.

categories that is ultimately expected to result in a Wake Vortex Avoidance System (WVAS) requiring interface with terminal automation systems.

Though considerable knowledge has been gained about the general characteristics and behavior of wakes, there remains much to be done before the degree of hazard can be forecast for dynamic application in specific situations. At present, the primary concentration is on developing techniques to detect and quantify the presence and intensity of wakes. Having these capabilities and data concerning pertinent meteorological conditions (e.g., wind direction and velocity), it is conceivable that the intensity and drift of a wake that would ensue a given aircraft's passage along a given path could be predicted with some reasonable degree of accuracy using techniques in which the prediction coefficients are continually smoothed by a comparison of detected values against those previously predicted.

Concerning efforts under the Terminal/Tower Control Program to provide automation assistance in the execution of air traffic management functions, severe wake turbulence (like conflicting aircraft, obstructions and severe weather) represents a potential hazard to flight operations. It thus may be viewed as one of a number of constraints that must be considered in the choice of control instructions that specifically govern an aircraft's future position. Lacking more definitive criteria, as well as practical means for its application, the present control practice is to apply a special (extended) set of separation criteria with respect to flights following or crossing behind certain classes of aircraft whose wakes are known to constitute a hazard exceeding the protection volume of standard separation minima. As efforts to detect and quantify the intensity of wakes progress, it is expected that a more extensive breakdown of potential wake hazards by type-pairings of aircraft will emerge. While it is unrealistic to expect that such added, conditional criteria could be applied by the controller using conventional techniques, it does appear reasonable and is intended that

any such additional criteria be applied in the spacing determinations involved in the metering and spacing program. Thus, the intermediate implications of the wake turbulence efforts are that they will result in more complex spacing criteria that will need to be accomodated in the data base and logic designs of the terminal automation programs.

Presently, there are too many unknowns to spell out the nature of system interfaces and information exchanges that might ultimately be required between terminal automation systems and wake vortex avoidance systems. It is evident, however, that when the capabilities for prediction are achieved, there will be need for such an interface.

5.10 Program 11 - ATC Systems Command Center Automation

This program includes development efforts to provide a capability for monitoring the National Airspace System status and activities of air traffic control resources from a centralized facility (see FAA-ED-11-1A, Technical Program Plan for ATC Systems Command Center Automation). The program includes the establishment of a Central Flow Control Computer Facility at the Jacksonville, Florida ARTCC which will interface with the 20 CONUS ARTCCs through five store-and-forward computers and the ATC Systems Command Center in Washington, D.C.. This system will also replace the "Airport Information Retrieval System (AIRS)" that is presently operating within a commercial time-sharing computing system.

Effective accomplishment of the Central Flow Control Function requires continually updated information on the current and projected capacity, demand, operations rates, weather, nav-aid status and other known information in order to provide an optimum flow while maintaining safety and efficiency in the use of the airspace. Since the same data (and more) are also required by the ARTCCs for accomplishment of their functions, no direct digital data interfaces between Central Flow Control and the terminal automation systems are now envisioned. Instead, it is expected that status/capacity/flow data available in the high activity terminal facilities will be provided to Central Flow Control and ARTCCs via direct access telephone channels. Information on

selected flights will be transmitted from the ARTCCs to the Central Flow Control Computer via digital data interfaces. In view of the nature of these interfaces, specific technical development activities relative to the processing and transfer of flow control data will be handled through the En Route Control Program. However, direct liaison between Central Flow Control and Terminal/Tower Control Programs will be effected for coordination of general concepts, requirements and objectives, especially as additional functional capabilities are added to Central Flow Control.

5.11 Program 12 - En Route Control

This program includes efforts to develop significant functional and system enhancements to increase the capabilities and upgrade performance of the en route ATC system (see FAA-ED-12-2A, En Route Control Program Development Plan).

The close relationship between the en route system and the terminal system requires continuous coordination of the E&D activities in both areas. There are general similarities in a number of the capabilities to be developed, the problems to be overcome in their development and in the relationship with efforts in other programs. Therefore, liaison must be maintained on the nature and proposed approach to all activities in both programs and detailed coordination effected on activities having direct interface implications.

The primary en route development activity bearing on the Terminal/Tower Control Program is the development of the en route metering function. This function has the objective of improving the efficiency of metering air traffic from en route airspace to major terminals which should reduce holding in terminal airspace and thus minimize disruptions in the flow of arriving traffic. The design concept envisions an eventually automatic interchange of information between the en route centers and terminals. Terminal information to the centers will establish inbound feeder fix arrival rates matched to acceptance capabilities; en route

outputs to the terminals will identify optimum arrival times at the established terminal feeder fixes. The Terminal/Tower Control Program activities will include the definition of display outputs and computer message inputs to accomodate the requirements of the en route metering function and the development of the required software for the ARTS computer. Development of the terminal side of the en route metering function will involve close coordination with the en route E&D activity as well as the Air Traffic Service to ensure that operational requirements are satisfied.

Over the longer term, the plan is to interface the en route metering function with the terminal metering and spacing function to provide greater continuity in the handling of terminal arrival traffic. In this effort, the Terminal/Tower Control Program will be responsible for definition of the information interchange as well as development and test of the expanded capability.

The primary terminal development activity bearing on the En Route Control Program is TIPS. TIPS will require modifications to software within the en route computers to provide for the transfer of expanded flight data from the centers to the terminals and for the processing of additional types of messages. This activity will be closely coordinated with the en route E&D activity to assure development and test of the en route software necessary to interface with the TIPS prototype.

5.12 Program 13 - Flight Service Stations

This program includes efforts to (1) achieve a reconfiguration of the Flight Service Station (FSS) network into a series of multi-level station complexes, (2) modernize the station environments and equipment, and, (3) apply automation to assist in the performance of flight service functions.

Except as they may affect the configuration of operating quarters and equipment rooms in combined station/tower facilities, near term activ-

ities in the FSS Program are not expected to interact with efforts in the Terminal/Tower Control Program. In the long term, it is possible that an interface may be required between terminal and FSS automation systems to provide for the exchange of essential flight plan and control data on VFR flight plan traffic.

5.13 Program 15 - Weather

This program includes efforts to improve detection, accuracy of prediction, and dissemination of weather information tailored to the needs of pilots and the air traffic control system. Several of the activities within the program have direct relationships requiring close coordination with the Terminal/Tower Control Program development efforts. Activities of this nature in the Weather Program (see FAA-ED-15, Program 15 - Weather) include efforts to develop:

- ASR Weather Processing Improvements
- Aviation Weather and Aeronautical Data Systems (AWADS)
- Low Level Wind Shear Alert Systems (LLWSAS)
- Thunderstorm Gust Front Detection Systems (TGFDS)

The ASR improvement work will include modifications to provide improved weather information through reflectivity mapping and calibration. With these modifications, broadband weather outlines can be presented on TRACON controller displays. Longer term activities will include modifications to ASR-7 and 8 radars to incorporate doppler processing and/or the development of a doppler Weather Radar System for integration into the terminal system.

AWADS is envisioned to be a system of processors and displays for the collection, distribution and presentation of weather information in towers and TRACONS. The system will interface with ARTCC weather systems providing for rapid interchange of operationally significant weather information. The Terminal/Tower Control Program will closely coordinate with the AWADS activity to ensure maximum consolidation of

the processing and display requirements of both the AWADS and TIPS systems. System studies will consider design approaches for maximum utilization of common hardware devices (i.e., computers, displays, communications channels).

The Low Level Wind Shear Alert System is intended to detect hazardous winds near the touchdown and liftoff areas. The Thunderstorm Gust Front Detection System is designed to measure pressure jumps at the outer marker to provide an early warning of thunderstorm gust hazards. Over the longer term, more advanced sensors are to be designed to measure the low-level wind shear in the terminal area through the use of doppler radar or pulsed doppler laser techniques.

The various wind shear and gust measurement systems will require displays for the presentation of their information. The Terminal/Tower Control Program efforts will include coordination with these weather activities to ensure consolidation of display requirements with a goal toward use of common hardware devices.

5.14 Program 16 - Technology

This program includes initial investigations of new techniques and assessment of promising technological advancements that appear to have applicability in meeting FAA's engineering requirements. Also included are exploratory human factor efforts to improve man-machine relationships and interfaces in applications of concern to the FAA. As confidence in a particular technique or innovation is advanced to a point where its potential and applicability to specific activities in a particular program are clearly established, responsibility for future application efforts is shifted to that program. In some instances, the assessment process is expected to involve interface with and utilization of terminal automation test facility resources.

While Technology Program items are in initial investigation phases, the relationship between Program 14 and this program is one of liaison

to maintain a general awareness of activities and the status of efforts. As the potential and applicability to terminal development efforts become increasingly clear or the need to interface with or otherwise utilize terminal test bed resources becomes evident, the activities in the two programs must be more closely coordinated.

Activities currently in the Technology Program that are of interest to the Terminal/Tower Control Program include the following:

- Efforts to develop a coherent plan for meeting the post-1985 ATC computing needs with a computer complex that can be implemented and maintained at a reasonable cost and that can evolve easily as functions and technology change. The activity will emphasize a top-down, broad-view approach to the computing complex design but will, when necessary, undertake detailed technology studies that are critical to the design.
- Efforts to investigate improved man-machine interface techniques and to define the proper role of humans in highly automated ATC systems and cockpits.

5.15 Program 21 - Support

This program is comprised of E&D efforts in a variety of areas considered, in general, to be of a supporting nature. Of these, the principal activities having interface or design implications on activities in the Terminal/Tower Control Program are efforts directed at fuel conservation and efforts to provide additional training capabilities for air traffic controllers at the FAA Academy and at field sites.

The fuel conservation efforts at the present are in the study and simulation stages in which investigations are being made to improve fuel utilization by profile departure and arrival techniques and by eliminating the 250 knot speed limit in terminal control areas. Special attention is being directed to these efforts to assure that any selected technique is compatible with all aspects of the Terminal/Tower Control

Program, particularly the metering and spacing development activity.

The training efforts involve coordination within the Terminal/Tower Control Program to assure that the terminal radar training facilities being developed for the FAA Academy provide adequate simulation of operational TRACON environments to assure realistic training for student air traffic controllers. In addition, the field training enhancements for field site TRACONS are being developed utilizing the extended target generators (ETG) developed for ARTS III facilities.

Additional categories of effort under the Support Program that require periodic coordination and information exchange with respect to possible future impact on terminal developments include:

- Electrical power system design activities.
- Ground monitoring investigations.
- Control tower design criteria.
- Mobile ATC facility design criteria.

6. PROGRAM STRUCTURE AND ALLOCATION OF TECHNICAL DEVELOPMENT EFFORTS

6.1 Subprogram Structure

The activities encompassed by the Terminal/Tower Control Program are divided among a number of subprograms to facilitate technical administration and accomplishment of the various efforts. As a practical matter, and in the interest of continuity, the subprogram structure reflected in this plan is based on the previously established division of on-going activities. In general, the allocation of activities provides for emphasis along the following lines:

- Initial planning, analyses and definition efforts leading to establishment of functional, engineering and interface requirements at a sufficient level of detail to guide interrelated development activities carried out within the various subprograms.

  This type of activity is covered under "Program Planning and System Engineering" (Subprogram 142-121).

- Engineering and development of the various hardware and software systems for the acceptance, processing, correlation, distribution and display of flight plan, control, surveillance and environmental data.

  Activities of this nature are subdivided by type of system and are covered under the following:

  "ARTS III Expansion" (Subprogram 142-171)
  "ARTS II Enhancements" (Subprogram 142-175)
  "Terminal Information Processing System" (Subprogram 142-173)
  "Advanced System Design" (Subprogram 142-178)

- Development of concepts, software and associated operational procedures for the application of automation assistance in the execution of air traffic management and control functions.

  These activities are distributed among the following three

subprograms with the primary area of concentration in each as indicated by their titles:

"Metering and Spacing" (Subprogram 142-172)
"Conflict Alert and Resolution" (Subprogram 142-174)
"ATC Applications of Data Link" (Subprogram 142-176)

- Establishment, operation and maintenance of a terminal test environment necessary to carry out Terminal/Tower development, experimentation and test activities.

  These activities are covered under "Terminal Automation Test Facility" (Subprogram 142-179).

- Follow-up assessments of the adequacy of fielded improvements in terms of utility, capacity and performance, and technical assistance in the design of changes/modifications to overcome deficiencies encountered in Terminal/Tower in-service equipment and facility environments.

  These activities are covered under "Sustaining Engineering" (Subprogram 144-170).

More detailed information concerning the purpose, scope and principal tasks to be accomplished within each subprogram is provided in the paragraphs that follow.

6.2 Program Planning and System Engineering (Subprogram 142-121)

This subprogram provides for the initial planning and follow-up monitoring of technical activities carried out within the Terminal/Tower Control Program. The planning activity consists of analyses and definition efforts to convert the broad guidelines emanating from the System Program into functional, engineering and/or interface requirements sufficient to identify and guide the development activities that need to be carried out in the individual subprograms. The monitoring activities consist of follow-up reviews of design approaches and progress to assure they remain in consonance with objectives, that inter-

faces and dependent schedules are compatible and that there is a cross-feed of pertinent information between affected activities.

Principal tasks included in the subprogram are as follow:

a. *Preparation and Updating of the Terminal/Tower Control Engineering and Development Program Plan*

   This activity consists of periodic reviews of the plan and the preparation of revisions or new editions as necessary to keep the plan current and/or improve its utility as a guidance document.

b. *Preparation of Terminal/Tower Inter-System Interface Specifications*

   As indicated in Figure 4-1, the configuration of TRACON and control tower facilities within a given terminal control environment requires the establishment of interfaces between different types of terminal automation systems. The purpose of this task is to assess the allocation of functions between systems when deployed in these configurations, define the data exchange necessary between systems and specify the technical interface characteristics required.

c. *Analysis and Definition of Terminal Automation System Modifications Required for DABS Integration*

   To properly function during the initial phase of the ATC system upgrading process, the designs of the ARTS II and Expanded ARTS III data processing and display systems have been based on the technical characteristics of current vintage surveillance systems (viz., ATCRB and ASR). In Phase II of the upgrading process, the ATCRBS is to be replaced by the Discrete Address Beacon System which, in addition to improving the reliability and accuracy of surveillance data, will provide a two-way digital data link for automatic

ground-air-ground communication. In addition to fundamental changes in technical characteristics of the ground beacon station (as contrasted to current systems), changes in the primary radar sensors to assure compatibility with DABS are also anticipated.

Analyses relative to various configurations of the Discrete Address Beacon System and the allocation of functions between DABS and ATC facility processors are being carried out under the System Program. Efforts to develop the DABS are being carried out under Program 03, Air Traffic Control Radar Beacon System. The purpose of this task is to identify and define the specific changes required in the Phase I ARTS II and Expanded ARTS III systems to interface and function with DABS (1) as the source of surveillance data, and (2) as a media for the automatic transmission/receipt of control data.

d. *Analysis and Definition of Terminal Automation System Modifications Required for Interface/Integration with Other Systems*

In addition to the Discrete Address Beacon System, there are, as indicated in Section 5, various other development efforts planned or in progress in other E&D programs that have interface and/or design implications relevant to the terminal automation systems. The objective of this task is to develop further details on the technical nature of these interfaces, determine the impact on the terminal automation systems affected and define the changes or additions required for effective integration.

6.3 ARTS III Expansion (Subprogram 142-171)

This subprogram provides for the design, fabrication and test of development packages to expand the configuration and technical capabilities of the ARTS III data processing and display system from the present

level to the capabilities required to support medium to high density terminal environments in the 1980's.

The basic ARTS III system, as originally implemented, consists of a data conversion and processing complex coupled with plan view displays that employ high speed deflection and time-shared writing techniques to provide a composite display of alphanumeric data with broadband radar/beacon target and map video data on cathode ray tubes. Operated in conjunction with its associated operational software, the basic system provides the capability to automatically track beacon equipped aircraft, correlate beacon track and flight data, and display the flight identification, beacon reported altitude (for appropriately equipped flights) and track velocity (analogous to ground speed) in the form of alphanumeric tags associated with appropriate beacon targets. The system also provides the capability to transfer the control of tracks from one equipped position to another in conjunction with intrafacility handoffs and includes provisions for exchanging abbreviated flight plan and control data with NAS Stage A Centers to facilitate initial establishment of track data files and enable semi-automatic accomplishment of interfacility handoffs of beacon equipped flights. The system is configured to serve the arrival and departure radar controller positions of a TRACON. Through a modification to the BRITE display system, the capability to display alphanumeric tag data in association with beacon targets has been extended to serve the local controller in collocated tower cabs where the remoting involved is within normal cabling distance for the system. Components of the basic system essential only to the alphanumeric capabilities are single thread (i.e., non-redundant) with the fall-back method of operation being the use of broadband video data and conventional (pre-ARTS) radar monitoring and control techniques in the event one of these components fail or is otherwise not available.

Initial development packages derived from this subprogram resulted in the enhancement of the basic system to include radar tracking in addition to and correlated with beacon tracking, continuous data record-

ing (CDR) of all critical data during system operation, and the capability to detect and isolate faults and to reconfigure system resources for failsafe/failsoft operation.

With automatic tracking of all detected flights, rather than just controlled flights, the ARTS system is in a posture to accept control automation functions such as conflict resolution and to facilitate all digital display operations.

Effective support of future terminal operations will require the provision of numerous additional automation capabilities. Those which are key to the objectives and activities of this subprogram include capabilities and features to:

- Enable narrowband remoting of digitized data from radar sites to the TRACONs.
- Eliminate the need for displaying "raw" broadband air traffic data on plan view displays.
- Expand and extend data processing and display capabilities to include digital surveillance displays at remote towers located at satellite airports served by the TRACON.
- Accomodate the control automation software capabilities developed under other subprograms (e.g., metering and spacing, and conflict alert and resolution).
- Enable processing of surveillance data from DABS sites.
- Enable processing and display of improved primary radar data derived from Moving Target Detector (MTD) equipped sites.
- Accept, process and display data from local weather sensors and data circuits.
- Interface with automated airport surface traffic control, TIPS, wake vortex detection, and wind shear detection systems.

The principal developments to be accomplished under this subprogram

include the following:

a. *All Digital System Operation*

This task will establish the capability to derive all-digital radar data at the radar site, to remote the data over telephone lines to the TRACON and to initiate operational usage of all digital plan view displays. Initial application of this capability is envisioned for selected high density facilities to (1) provide more writing time for the presentation of additional digital data, (2) provide more selectivity and increased clarity of displayed data, (3) facilitate the composite display of surveillance data derived from more than one radar site, and, (4) eliminate the need for costly broadband remoting equipment. Eventually, it is expected that this capability will be required at all sites as new functional capabilities are incorporated into the terminal automation environment.

b. *All Digital Displays for Satellite Tower Cabs*

The purpose of this task is to develop the additional hardware and software to enable the operation of Tower Cab Digital Displays (TCDD) in satellite tower cabs within the radar coverage area of the associated TRACON. Functionally, the TCDD will operate as an additional display for the ARTS III system. However, in order to meet the requirements dictated by the remote tower cab environment, the equipment located at the remote site must include (1) buffer/refresh capability to enable narrowband communications between the TRACON and the remote tower, (2) a bright display with contrast enhancement features to enable operational usage in the bright environment of a tower cab, and, (3) compact, flexible design features to meet the limiting and varied space constraints encountered in tower cabs.

In addition to application at satellite towers associated with

ARTS IIIA TRACONS, the TCDD is also a logical replacement for the BRITE and BRITE A/N equipment in the towers which are collocated with the TRACON.

In addition to the hardware and software development, this task will include an operational evaluation at a field site to establish the acceptability and/or determine additional requirements for TCDD application at satellite towers.

c. *New Terminal TRACON Display*

This task is for the development of a new terminal display leading to the replacement of the basic ARTS III displays as they become a major limiting factor in new automation efforts. Features not now provided by the basic ARTS III which are to be included in the new display consist of vector generation capability, internal refresh, video compression, color capability and various operational options to provide greater flexibility as functional enhancements are added to the automation system. Recent advances in technology make it possible to produce a display that, while using fewer parts and less power, offers greater capability, flexibility and reliability at lower cost. The objective in the display design will be to exploit these technological advances to the maximum practicable extent.

The new display will be capable of all digital operation but will also retain the rho-theta sweep (time-compressed) to enable its application at ARTS IIIA, basic ARTS III or ARTS II sites.

d. *Data Acquisition Enhancements*

This task is to develop the hardware and software capability to interface and operate with the Moving Target Detector (MTD) system for primary radar data and with the ATCRBS Monopulse

Processing System (AMPS) for secondary radar data. (The AMPS will be built to the DABS specification requirements for monopulse.) This effort will include the necessary hardware and software to correlate the MTD and AMPS data and will provide a major improvement in the performance of automatic tracking of all aircraft including flights not equipped with a transponder or whose transponder is malfunctioning. The hardware making up the MTD, AMPS and correlation function is referred to as the Sensor Receiver and Processor, Model II (SRAP II). It will be designed to be consistent with the anticipated changes from the SRAP I of ARTS IIIA to the implementation of DABS and MTD. The SRAP II will embody enhancements to provide improved azimuthal accuracy, more reliable and consistent tracking data and the capability to more readily support all digital operations.

This task will also include efforts to derive more meaningful weather data for presentation on the terminal plan view displays through the application of filtering techniques embodied in the MTD.

e. TIPS/ARTS III Interface

The Terminal Information Processing System (TIPS) is being developed to provide for the processing, distribution and display of flight data at control positions in TRACONs and control tower cabs (see paragraph 6.5). The TIPS design calls for an interface with the ARTS III system and for the capability to display abbreviated, TIPS derived, flight data on the ARTS III plan view display in alternate data modes controlled by switch action at the display console. This task is to develop the ARTS III software/hardware modifications required for integration with TIPS.

f. DABS/Expanded ARTS III Integration

As indicated in preceding portions of this plan, the nature and technical characteristics of the interface between Expanded ARTS and DABS equipped surveillance sites is expected to be significantly different than with the present day radar/beacon systems. These differences are expected to result in the need for changes in interface hardware and modifications of the surveillance input processing and tracking software.

Efforts to identify and define the specific changes required in the Expanded ARTS III systems are included in Subprogram 142-121, "Program Planning and System Engineering" (see paragraph 6.2c). The purpose of this task is to accomplish the ensuing detailed design, engineering, fabrication and testing of the hardware/software modifications/additions applicable to the Expanded ARTS III system.

g. Interfaces with Additional Systems

In Sections 4 and 5 of this document, there are brief descriptions of efforts that are planned or are in progress that are expected to result in additional interface requirements and/or other design changes to the ARTS III system (e.g., Airport Surface Traffic Control, Wake Vortex Avoidance, Wind Shear Detection Systems, etc.). A task to develop further details on the technical nature and impact of these additional requirements on terminal automation systems and to define the changes or additions required for effective integration is included under Subprogram 142-121 (see paragraph 6.2d).

Under this subprogram, the task is to carry out the detailed design, fabrication and test of the changes or additions that are applicable to the enhanced ARTS III system.

6.4 ARTS II Enhancements (Subprogram 142-175)

It is presently the intent of the operating services to undertake the development/incorporation of such features as may be considered necessary to enhance the capabilities of the basic ARTS II system. The purpose of this subprogram is to provide for the possibility that future E&D assistance may be requested for the design, fabrication and test of upgrading packages to expand the configuration and technical capabilities of the ARTS II data processing and display system to the capabilities that may be required in facilities served by these systems in the 1980's.

The basic level ARTS II system, as being deployed in the National Airspace System, consists of two configurations, viz., TRACON and TRACAB. The hardware consists of data conversion, processing and display equipment. Beacon conversion (i.e., interrogation and reply pulse digitizing) is accomplished using techniques similar to those employed in the basic ARTS III system. Data processing, however, is based on the use of mini-computer technology and employs a single mini-computer in the system configuration. The TRACON displays employ medium speed deflection and time-shared writing techniques to generate composite presentations of digital alphanumeric data with broadband radar/beacon target and map video data on cathode ray tubes. Modifications to the BRITE display system (using the same concept and techniques as employed with ARTS III) enable the presentation of alphanumeric data with broadband target and map video data on BRITE displays in the tower cab. In the TRACAB configuration, only BRITE displays are used. Operated in conjunction with the associated operational software, the basic system will digitize, decode and display numeric beacon code and altitude data adjacent to broadband beacon targets on plan view displays. For aircraft equipped with discrete code transponder capabilities, the system will also correlate and display the appropriate alphanumeric flight identification. Provisions are included to transfer the control

of tags on discrete code flights in conjunction with intrafacility handoffs. Provisions are also included for on-line exchange of abbreviated flight plan and control data with NAS Stage A Centers to facilitate initial establishment of discrete code/flight identification correlation files and enable transfer of control actions to be handled semi-automatically in conjunction with interfacility handoffs of discrete code beacon equipped flights.

Compared to the above, a number of additional capabilities/features are expected to be required for these systems to effectively serve the low to medium density environments in the mid- to late 1980's. These may include any or all of the following:

- Beacon tracking.
- Minimum safe altitude warning.
- Conflict alert.
- Interface and integration with TIPS.
- Interface and integration with a radar/beacon system from which the output is in the form of all digital, target report messages (e.g. SRAP).
- Target generation, training.
- Radar augmented tracking.
- Interface with a digital, plan view display system serving a remote tower cab.
- Interface and integration with DABS surveillance sites.
- Multiple processor configurations.

It is anticipated that the techniques developed under the ARTS III expansion program for providing these capabilities at ARTS III sites will, for the most part, be applicable to ARTS II configurations. Nonetheless, it is to be expected that considerable detailed design and engineering effort will still be required to realize the actual

interface/integration with ARTS II as well as extensive testing to verify the integrity of the detailed design.

6.5 Terminal Information Processing System (TIPS) (Subprogram 142-173)

This subprogram provides for the design, fabrication and test of a computerized data processing and electronic display system to serve TRACONS, collocated control tower cabs and remotely located control towers. The Terminal Information Processing System is intended to provide an improved capability for entering, displaying and distributing flight plan and other non-radar data in the terminal environment.

The initial phase of the TIPS engineering and development activity is directed towards providing basic flight data handling capabilities for the high and medium activity terminal environments served by ARTS III systems. The longer term E&D plan is to develop functional enhancements for these higher activity facilities and define configurations for application at lower activity ARTS III facilities, ARTS II facilities and, eventually, non-radar towers.

Currently, the acquisition, distribution, display and updating of flight plan and other non-radar data (e.g., meteorological information) in terminal facilities are accomplished through the use of paper flight progress strips, manual recording and distribution of information, and by voice communications within and between facilities. In many terminal facilities, flight progress strips are printed via the Flight Data Entry and Printer (FDEP) Subsystem which interfaces the terminals with host Air Route Traffic Control Centers (ARTCC). The FDEP System has basic capacity limitations which affect the availability and timeliness of flight data, especially in the more active terminals. Being largely of a mechanical nature, the FDEP equipment is also the source of a number of maintenance problems. In general, the use of flight strips and manual methods to access and distribute information in the terminal environment have a significant impact on controller

workload and adversely affect productivity and system capacity.

The TIPS design concept is to eliminate the need for the FDEP system and paper flight progress strips by the introduction of electronic displays, and, to improve data availability, accessibility, recording and distribution by automatic data processing and electronic routing. The effects of TIPS are expected to be reduced controller coordination workload, more timely availability of essential information and greater flexibility in controlling which positions must be staffed.

The TIPS efforts have progressed through the prototype specification stage. A functional prototype system is to be installed and tested at both NAFEC and an operational ARTS III site. The primary E&D activities leading to the prototype specification included a comprehensive field survey of current flight and control data handling methods, the testing of alternative display and data entry design concepts at NAFEC, and a system configuration study to establish the basic TIPS hardware configuration.

The field survey served to define the requirements for flight and control data at each operational position in the TRACON and tower cab. The survey identified the types of information needed, when it is needed, revision requirements and distribution requirements. Based on these requirements, alternative display and data entry designs for TIPS were defined and then subjected to testing at NAFEC using an available Flight Data Distribution System test bed. The NAFEC testing led to definition of the basic requirements for data display and data entry. In the system configuration study, several alternative hardware configurations were addressed in which a basic issue was whether the TIPS functions should be integrated into the ARTS III hardware/software or be accomplished in a separate complement of hardware and software elements. The study concluded that a separate configuration offers more benefits and this approach was adopted. Some of the more noteworthy

advantages of the separate configuration include:

- Lower net costs over ARTS III expansion.
- Better adaptability to facilities of different size and automation level.
- Better expansion capability (i.e., easier to expand in capacity and functions performed).

Once the basic configuration was established, the functional and performance requirements for the hardware and software elements of TIPS were defined and the requirements relevant to interfacing the system with the NAS En Route and ARTS III computers were established. Additionally, a failure mode design concept was formulated to ensure that the TIPS system could be adapted to provide levels of operation ranging from fail safe to fail soft depending on the type and size of facility in which it is installed.

Current and planned efforts under this subprogram are divided into two groups with principal emphasis and activities as follow:

a. Basic TIPS

These efforts are directed towards establishing flight data handling capabilities in a system configured to serve the higher activity ARTS III locations. The activities include the acquisition of two functional prototype systems for which the detailed design, fabrication and integration of hardware and software components will be based on the previously established prototype specifications. In parallel with these efforts, coordination and monitoring of efforts to develop interfacing software under the En Route and Expanded ARTS III programs will be carried out.

One of the systems will be installed in the Terminal Automation Test Facility at NAFEC where it will be subjected to hardware

and software design verification tests and to tests of the NAS En Route system and ARTS III system interfaces. Later, this system will be used to support the development of follow-on enhancements.

The other system will be installed at an operational field site to assess its operational suitability in a live traffic environment. These tests will be carried out in two phases, the first of which will consist of running the system in parallel with but not in support of facility operations. During this phase, the system will be assessed from a technical and operational viewpoint and such changes as may be necessary to support the second phase will be incorporated. In the second phase, the TIPS will be used as the primary operational system with the FDEP system serving as back-up.

The results of these test efforts will be used in preparation of the technical data package to be handed off to the Airway Facilities Service for their use in the acquisition of systems for implementation.

b. TIPS Enhancement

These efforts are directed towards (1) determining TIPS configurations most suitable for application in lower activity TRACONS/TRACABS and control towers, and (2) the development of enhancements to further the utility of the system.

The efforts to establish TIPS configurations for lower activity sites will include investigation and consideration of interface and other requirements that may be unique to lower activity ARTS III, ARTS II and non-radar tower sites. The object of these efforts is to establish configurations which, though initially scaled down, may subsequently be expanded in a modular fashion to meet future needs.

Efforts to develop enhancements to upgrade the basic TIPS are in the areas of failure mode capabilities, interfaces with new automation functions and interfaces with new and existing systems.

Failure mode activities will include the development of technical requirements for hardware redundancy, automatic failure sensing and equipment switching for application in TIPS configurations serving high activity facilities. Additionally, design requirements will be developed for the incorporation of fail soft capabilities in configurations serving medium as well as high activity sites.

Activities relative to interfacing with new automation functions include the determination and development of changes necessary for TIPS to function with and aid in the effective accomplishment of such new functions as metering and spacing and longer term control message automation functions utilizing the DABS data link.

The efforts relative to interfacing with new and existing systems include the engineering and development work necessary to realize an effective consolidation of hardware, software and communications requirements where TIPS is interfaced with other systems. Systems in this category, where a potential interface with TIPS may be involved, include:

- Aviation Weather and Aeronautical Data System (AWADS)
- National Automatic Data Interchange (NADIN) System
- Airport Surface Traffic Control (ASTC) System
- Wake Vortex Avoidance System (WVAS)
- Automated Flight Service Station System
- Discrete Address Beacon System (DABS) - Data Link

The TIPS display will also be considered for consolidating many of the existing operational non-radar functions in the tower cab.

6.6 Metering and Spacing (Subprogram 142-172)

This subprogram provides for the design, development and verification of automation techniques to aid in the sequencing, metering and spacing of terminal traffic arriving/departing medium to high activity airports. The goal is to establish methods to expedite the movement of traffic to the maximum degree commensurate with available runways, safety, and an orderly and equitable process of honoring user requests.

"Metering and Spacing" is a generic term which, applied to the operations of a given airport, covers the composite of activities necessary to plan and regulate the rate, order and separation of successive arriving/departing flights that are utilizing common airspace and/or common or interfering landing/takeoff surfaces. In current operations this is accomplished through the combined efforts and judgements of a team of controllers comprised of the local controller stationed in the tower cab and arrival/departure radar controllers located in the operating quarters of a TRACON facility. In substance, the operation involves the following:

Acceptance of inbound traffic at various altitudes from various transfer of control or VFR entry points and the issuance of maneuvering instructions to organize and position aircraft on the final approach course in proper sequence with proper spacing. These functions are performed by the arrival radar controllers with handoff to the local controller normally occurring in the vicinity of the ILS outer marker as flights proceed inbound on final approach.

Sequencing and control of all operations involving use of the active runways. These functions are performed by the local controller with handoff of departures to the departure radar controller normally occurring immediately after takeoff.

Delivery of outbound flights to various specified transfer of control or VFR exit points at various specified altitudes. These functions are performed by the departure radar controllers.

The conduct of operations requires very close coordination of each controller's actions and the efficiency is directly dependent on the capabilities of controllers to continually extrapolate and determine those control actions that are presently necessary to bring about the desired future results. When traffic is light to moderate and reasonably well spaced in time, the task is not overly difficult; however, as traffic increases in volume the job gets extremely complex and, with the introduction of additional variables in the spacing criteria to be applied, it can become overwhelming. In this respect, it is significant to note that the advent of larger, heavier aircraft has brought about a reappraisal of separation minima in light of the increased intensity and duration of their attendant wakes. Increasing the separation minima applied to all flights to a value that may be appropriate in the case of a light following a heavy aircraft would obviously result in a drastic and unacceptable reduction in system capacity, thus, different minima have been established for application on final approach between aircraft of different weight classifications designated as Small, Large and Heavy. As the volume of traffic continues to increase and more quantitative data on the behavior and effect of wakes from all types of aircraft becomes available, it is evident there will be increasing motivation to devise and apply separation minima keyed to additional classifications and pairings of aircraft types. Further, when the means to accurately predict wake behavior in prevailing atmospheric conditions have been realized, it will become additionally desirable to dynamically change the applicable separation criteria in consonance with changes in prevailing conditions. Consequently, if safety is to be maintained and capacity is to be increased, it is obvious that automation assistance is needed to cope with the additional variables and increase the precision with which control can be exercised.

With the introduction of ARTS and various expansion packages, capabilities for inter and intrafacility transfer of essential flight data and for the correlation and display of flight and surveillance data

have become available. The efforts under this subprogram are aimed at extending these capabilities to include decision assistance in the performance of metering and spacing functions. This entails the design and development of software capabilities incorporating adaptive sequence and control logic, time and space computation algorithms, versatile control geometry and input/output features that will enable:

- Determination of realizable arrival/departure sequences, intervals and schedules for optimum utilization of available runways.
- Metering of arrivals from terminal entry points and release of departures awaiting takeoff clearance at rates and times consistent with schedules, separation minima and limitations of control geometry.
- Application of fuel conservation flight profiles.
- Continual assessment of flight progress and determination of control actions necessary to maintain schedule/spacing conformance.
- Dynamic adjustment of stored wind values on the basis of achieved vs. anticipated flight paths and ground speed.
- Dynamic revision of schedules/sequence when variations from anticipated performance exceed the range of control adjustment.
- Application of varied separation minima based on the type/category of particular aircraft pairings.
- Adjustment of minimum separation values on the basis of inputs and updates from a wake vortex prediction system.
- Formulation and transfer of messages to the associated en route control system conveying such data as expected approach clearance times applicable to each inbound flight, fix/altitude availability, average arrival delays and acceptance rate forecasts.

Initially, computer generated metering and spacing instructions applicable to the individual aircraft will be displayed to the appropriate controller for delivery via voice communication. Following implementation of DABS, it is expected that automatic delivery of metering and spacing instructions via the DABS data link will be introduced.

The principal activities to be carried out under this subprogram consist of the following:

a. *Basic Arrival Metering and Spacing*

This task is to establish a metering and spacing capability that will enable the conduct of a field trial of the basic concept at a medium to high activity airport served by a basic ARTS III system. The objective is to determine what, if any, flaws exist in the basic concept when exposed to field operations so that any necessary changes may be incorporated in the design of the implementation version.

Since tracking in the basic level ARTS III is limited to beacon targets, provisions will be included in the design of the field trial package for creating slots in the arrival sequence to enable manual integration of flights that are either not equipped or that have a malfunctioning transponder. Also, since the package is limited to arriving traffic, these same provisions may be used as necessary to provide additional opportunities for departures.

The task involves the design, development and debugging of appropriate software modules as well as integration and verification of the capabilities with a basic ARTS III configuration and such other hardware components as may be necessary to support the field trial effort. Program integration, technical performance tests and initial assessment of the adequacy of design features will be accomplished at the Terminal

Automation Test Facility at NAFEC where facilities are available for both dynamic simulation and live flight verification tests under controlled conditions. Following initial shakedown at the Terminal Automation Test Facility, the capabilities will be added at a representative ARTS III site for appraisal under operating conditions in the field.

b. *Implementable Metering and Spacing*

The objective of this effort is to establish an arrival metering and spacing capability suitable for field implementation. Since this capability is intended to serve high activity sites and these sites are presently being upgraded to an ARTS IIIA level, the metering and spacing function will be designed for integration into systems of this level. Additionally, the effort will involve the development, integration and test of (1) modifications to overcome flaws uncovered during tests of the basic metering and spacing field trial package, (2) provisions to accomodate simultaneous arrival operations to dependent and independent parallel runways and to independent non-parallel runways, and, (3) provisions for effecting changes in the active runway(s) without the need for shutdown and start over of the M&S function. Accomplishment of these efforts will require capabilities for extensive and realistic dynamic simulation as well as for live flight verification tests under controlled conditions. Therefore, it is expected that the bulk of the experimentation and design verification activities will be carried out in the Terminal Automation Test Facility.

c. *Metering and Spacing Expansion*

This activity encompasses a number of efforts that involve addition to or modification of the metering and spacing capabilities previously cited. It provides for the necessary analyses and/or design, programming and test effort associated

with each of the following:

- Departure Metering and Spacing: This effort is to expand the arrival metering and spacing capabilities to provide assistance in (1) the release of successive departures and interleaving departures/arrivals using the same or dependent runways, and, (2) the precise delivery of departures to the en route system at requested points and times. Since accomplishment of these functions require data on the specific runway to be used by each departure, its position in the departure queue and its readiness to depart (in addition to aircraft type and departure fix data already available in the system), the prior introduction of TIPS capabilities will be prerequisite to these efforts.

- RNAV/Metering and Spacing Integration: With the increased availability of various area navigation systems, there is a growing desire to expand the application of these systems in terminal area operations. While there is considerable variation in the capabilities of the different RNAV systems, all require some form of input that serves to define the route to be flown. Where this route is subjected to frequent change (as in the case of radar vectoring), the input actions required to keep the RNAV system updated obviously increase the cockpit workload of the flight crew and thus reduce the advantages of the system to the user.

  In contrast to this, metering and spacing seeks to organize and position a number of aircraft so as to achieve, without violating, minimum spacing intervals in a sequence of successive operations. Key to attainment of these objectives is the capability to respond to variations between the actual vs. the predicted progress of flights in a manner that will both avoid the development of insufficient

intervals and minimize the development of excessive intervals. This not only requires the capability to adjust each flight's progress to achieve conformance with a predetermined schedule but also requires the lattitude to adjust individual schedules (within realizable bounds) as the overall situation dictates. The approach in metering and spacing is to use both path and speed adjustment to achieve precision in delivery while generally conforming to speed regimes considered within the normal and most economical range for the operation in progress. Limiting the freedom to alter flight paths of RNAV equipped users would thus impose an additional constraint adversely affecting the attainment of metering and spacing objectives.

This task is to investigate and determine methods whereby the additional navigation capabilities of RNAV may be utilized to advantage by equipped users in an automated metering and spacing environment without derrogating performance of the metering and spacing function.

- DABS and Data Link Integration: DABS equipped surveillance sites are expected to exhibit increased reliability and accuracy in the detection and determination of aircraft position which is expected to lead to substantially improved tracking capabilities. This, in turn, should serve to reduce the magnitude of uncertainties encountered in the metering and spacing process and enable a reduction in the amount of guard space added to separation minima to compensate for potential errors. Widespread application of the DABS data link capabilities should, in addition to reducing controller communications workload, reduce the time variance between derivation and delivery of control instructions and thus permit some further

reduction of the guard space.

This task is to determine and design the metering and spacing modifications/additions necessary to realize maximum advantage from these capability improvements.

- Wake Vortex Prediction: It has been noted earlier that as efforts to detect and quantify the intensity of wakes progress, it is expected that a more extensive breakdown of potential wake hazards by aircraft type pairings will emerge and will result in added, conditional variations in separation minima. It is probable, however, that these criteria will be based on a given set of atmospheric conditions. With wake vortex prediction capabilities, the concept is to not only tailor the criteria on the basis of particular aircraft type combinations but also to adjust the criteria on the basis of existing atmospheric conditions that influence wake behavior. Obviously, this will require modifications to the metering and spacing programs to accept and be responsive to such changes. It may also prove advantageous to provide updated wind values developed in the metering and spacing program to the wake prediction system to aid in the prediction process.

  The efforts under this task are to design and develop the modifications necessary for effective interface and integration of metering and spacing with a wake vortex prediction system.

- Microwave Landing System: In contrast to the fixed course and glide slope of present ILS systems, MLS will provide means to precisely determine azimuth, range and elevation angle from the MLS site. With this data, the airborne system may then compute the aircraft's position

with respect to any of a set of selectable approach paths (including curved) and glide slopes (including multi-angle) that may be desired. It is envisioned that these capabilities may be used to achieve noise reduction/redistribution and capacity increases. In any event, exploitation of the capability will require corresponding and complimentary changes in metering and spacing. This task is to design and integrate the software changes necessary for effective operation with MLS where curved approach paths and/or multi-angle glide slopes are to be applied.

6.7 Conflict Alert and Resolution (Subprogram 142-174)

This subprogram provides for the design, development, verification and test site implementation of automation techniques to aid in detecting and resolving potential conflicts in the movement of terminal air traffic at ARTS III equipped terminal facilities. The goal is to establish the means to maintain or improve upon present levels of safety as the density of traffic and rate of operations increase.

The primary mission of terminal ATC facilities is to promote the safe, orderly and expeditious movement of controlled traffic arriving and departing the airports served. This includes both IFR flight plan traffic and VFR traffic operating in airspace that may also be traversed by VFR flights not necessarily known to the terminal facility. The function is accomplished as a cooperative effort between controllers and the pilots of controlled flights in which:

- Pilots request approval of their intended operation from the controlling facility.
- Controllers issue:
  - clearances, representing authorization to proceed under specified conditions based on known traffic (i.e., traffic in communication and cooperating with ATC), or

- advisories, representing information on flight conditions (including essential traffic whose whereabouts is known) to assist the pilot in the safe operation of his aircraft (including visual acquisition and avoidance or spacing with respect to other aircraft.

Though totally dependent on human judgment, the system has accumulated an excellent safety record over the years. Nonetheless, collisions have occurred and the system is taxed more severely as the pace and density of operations increases.

To reduce the hazard engendered by uncontrolled VFR flight operations, actions have been taken to establish two levels of Terminal Control Areas encompassing the maneuvering airspace associated with the higher density airports. Operation within this airspace requires two-way communication with and authorization by the controlling ATC facility. It also requires that the flight be equipped with a VOR or TACAN receiver and with a beacon transponder. In Level I TCA's (highest density), Mode C automatic altitude reporting capability is an added requirement. For the remaining airports where ARTS systems are located, it is intended that Terminal Radar Service Areas (TRSA) be established in which two-way communication and participation with the control facility is encouraged but on a voluntary, rather than mandatory, basis. While these measures significantly enhance the safety of flight operations in terminal airspace, they do place an increased burden on the controlling ATC facility in terms of the number of flights whose position and movement must be monitored and instructions/advisories formulated and issued to avoid potential conflicts.

With the tracking and alphanumeric display capabilities of ARTS, provisions are now available for the presentation of beacon altitude data and, in the case of known flights, the flight identification in association with the present positions of aircraft detected by the radar/beacon sensors. The efforts under this subprogram are directed to providing assistance in predicting the near future air situation and deter-

mining appropriate conflict resolution actions considering all flights with known altitude that are operating in controlled airspace under jurisdiction of the facility and within the service volume of the facility's radar/beacon sensors. At locations having metering and spacing automation, the conflict alert and resolution capabilities may function as an additional monitor of these operations but will principally serve in guarding against potentially unsafe situations developing with overflights or traffic transitioning to/from nearby lower activity airports.

In the context of desired end results, conflict prediction (alert) and avoidance (resolution) functions are inseparable in that the only motivation for prediction is to avoid the occurrence of unsafe separation and the only basis for avoidance action is the anticipation (prediction) that an unsafe situation would otherwise develop. In terms of achieving automation capabilities, however, it is obvious that alerting capabilities must be reasonably well established before resolution efforts can progress. Accordingly, initial efforts are being directed toward achieving viable prediction and controller alerting capability. When this has been accomplished, efforts will be concentrated on establishing suitable means of providing resolution assistance.

Initially, advisories and resolution instructions will be provided to aircraft in the form of voice communications. Following implementation of DABS, it is expected that automatic delivery of advisories via the DABS data link will be introduced followed by the automatic delivery of conflict resolution commands.

Previous efforts under this subprogram included the development of MSAW (Minimum Safe Altitude Warning) capabilities for use in ARTS III equipped facilities. This capability, developed in response to a request from the Air Traffic Service, provides for the automatic monitoring of the present and projected position of controlled flights having

automatic altitude reporting equipment with respect to a stored map of minimum safe altitudes and approach/departure obstructions clearance data. The controller having jurisdiction over the flight is alerted when the monitoring function indicates a flight is presently or predicted to be at an unsafe altitude for the course it is flying. The MSAW feature has been implemented at all ARTS III sites.

In addition to MSAW, earlier efforts have been carried out under this subprogram toward development of conflict prediction and resolution capabilities suitable for application in terminal airspace where flight activity is concentrated and considerable maneuvering occurs. During the course of these efforts, a determination was made to restructure the development approach into three stages to provide for earlier implementatin of some alerting capabilities at the ARTS III field sites.

In the first stage, being developed to function in the basic ARTS III system, prediction and alert capabilities apply only to automatic altitude reporting flights that are controlled (tracked) by the ARTS III facility. In the second stage, being developed to function in ARTS IIIA system configurations, the Stage I capability is expanded to include non-controlled flights equipped with automatic altitude reporting transponders that might be moving into conflicts with controlled flights. In the third stage, resolution assistance will be added to the capabilities of Stage II to aid controllers in quickly determining a course of action that will not result in an equal or greater hazard.

The principal efforts under this subprogram are as follows:

a. *Stage I Conflict Alert (ARTS III)*

This task includes the design, development and integration of software to provide the Stage I capabilities for ARTS III systems receiving surveillance data from a single beacon site as well as a version for ARTS III systems receiving surveil-

lance data from two beacon sites. The task also includes shakedown, test and evaluation of each version at NAFEC and at the first of each of the two types of field installations to receive the capability.

As previously indicated, the objective of the Stage I design is to alert controllers in advance when two or more aircraft that have automatic altitude reporting capability and which are under control of the facility are predicted to come within potentially hazardous proximity of one another. The program is extensively parameterized to facilitate the determination and use of optimum alerting values such as look-ahead time and minimum miss distance. Additionally, provisions are included to enable the application of different values for aircraft operating in close proximity to the airports served and those operating in transition airspace.

b. *Stage II Conflict Alert (ARTS IIIA)*

The type of development and test activities in this stage are the same as those outlined for Stage I except (1) the program is being designed to function in ARTS IIIA systems and (2) the functional capabilities are being expanded to include assessment and alert of potential conflicts between flights under control of the facility and other detected automatic altitude reporting flights operating in airspace of concern to the facility. Additionally, during the development of this stage, an investigation will be made of the practicality of including controlled flights without automatic altitude reporting equipment where the flight's present and future altitude intentions are known to the controller.

c. *Stage III Conflict Resolution (ARTS IIIA)*

The objective of this task is to develop demonstrable conflict resolution capabilities that may be added to and compliment

the capabilities of the Stage II conflict alert function. The resolution function is to derive and present to the controller recommended resolution maneuvers that will (1) assure a safe miss distance, (2) not result in an equal or greater prospect of conflict with another aircraft, terrain or man-made obstacle, and (3) not require penetration of severe weather, restricted airspace or airspace outside the jurisdiction of the control facility. In view of the obvious complexities and extensive data base necessary to meet all of these requirements, the effort will be conducted in phases with the initial phase concentrating on developing suitable means for determining and presenting resolution options open/not open to the controller to avoid a predicted conflict without creating another between aircraft pairs.

Additionally, during the course of this effort, investigations will be made to determine and resolve any potentially adverse interactions between the conflict alert and resolution function and the airborne Beacon Collision Avoidance System (BCAS) or the Automatic Traffic Advisory and Resolution Service (ATARS) provided through DABS when these functions are being simultaneously employed in common airspace.

6.8 ATC Applications of Data Link (Subprogram 142-176)

This subprogram provides for the accomplishment of special tests, data collection and analysis efforts relative to the application of automatic data link capabilities in the provision of terminal air traffic management and control services.

One of the major goals of the development efforts to upgrade the ATC system is to achieve an effective capability for automatic ground-air-ground communication of air traffic control data. Conceptually, it is envisioned that such capabilities, when coupled with the automation of air traffic management and control functions, can expedite the

delivery of time critical messages, decrease voice communications requirements and reduce controller and pilot workloads.

Realization of the capability requires a reliable, high capacity data link, automatic derivation/interpretation of up-link/down-link messages respectively, and effective means for controllers and pilots to function with the system. In this respect,

- Technical capabilities for high speed, two-way transmission of digital messages are being developed as an integral part of DABS.
- Efforts to achieve automation capabilities in the accomplishment of various air traffic management and control functions are being carried out in the En Route and Terminal/Tower Control programs. These efforts are oriented towards initially interfacing with the controller for voice relay of instructions.

Application of the DABS data link for control communications will be preceded by the integration of DABS as the source of surveillance data for the ATC system. As this is accomplished, efforts will be undertaken to modify available control automation programs to formulate appropriate up-link messages and process associated down-link replies. Since the area of concentration in these efforts will be focused primarily on the accomplishment of only a given set of functions, there is a need to separately consider the total impact in terms of the controller's role and what is necessary to carry it out.

The task under this subprogram is to provide initial insight into controller interface implications and considerations pertinent to the introduction and use of data link capabilities in TRACON/Tower operations. The task will include the design and execution of experiments to determine the most promising means of keeping the controller attuned to the automatic transactions with data link equipped aircraft while providing voice instructions to those that are not equipped. It is anticipated that the efforts will entail dynamic,

real time simulation of controller work stations in which the various postulated automation and data link capabilities and control concepts are emulated.

6.9 Advanced System Design (Subprogram 142-178)

This subprogram provides for the studies and engineering analyses leading to the definition of the next generation terminal automation system. The objective of the activity is to identify applications of modern technology and advanced system design techniques to problems in the terminal area.

The initial activity will define considerations and factors to be used as the basis for the development of an upgraded terminal system design. Primary considerations and factors include:

- Limits of the ARTS III design which will constrain functional growth and affect traffic handling capacity.
- Increasing implementation and integration problems in ARTS III stemming from the introduction of additional automation systems, each requiring interface with and computer processing, display and communications capabilities on the part of ARTS III (e.g., TIPS, WVAS, ASTC).
- Increasing maintenance and logistic problems caused by aging ARTS III equipment.
- Long term benefits that might be achieved by a consolidation of more control facilities into Common IFR Rooms with advanced configurations and capabilities.

Studies will be undertaken to define the engineering and operational characteristics of the next generation system. Alternative design approaches will be developed for upgrading the terminal automation capabilities in several areas. In this regard, potential design features to be considered include the following:

- Distributed computer architecture.
- Digital radar inputs and multiple radar input mosaicking.
- Automated control message delivery via digital ground-air-ground data link.
- Display innovations to reduce space, power and processing requirements while improving the organization and presentation of pertinent data.
- Integrated tower displays of surveillance, TIPS, weather and ASTC data.
- Expanded simulation and training capabilities.

6.10 Terminal Automation Test Facility (TATF) (Subprogram 142-179)

This subprogram provides for the establishment, operation and upkeep of the terminal automation test facility at NAFEC. The purpose of this facility is to support the accomplishment of terminal/tower development efforts.

Engineering and development activities necessary to realize the upgraded capabilities sought for the various terminal environments involve numerous tests that are widely varied in purpose, scope and nature. Some may be oriented to determining the feasibility of a concept; others to the performance of a component, subsystem or system; and still others to operational and technical performance of advanced features, interfaces with related subsystems, etc. It is obviously impractical and unmanageable to attempt to accomplish the full range of all types of test efforts in one test facility. On the other hand, it is neither realistic nor economically feasible to establish all of the supporting instrumentation and facilities required to carry out all types of test efforts at a number of different sites. Accordingly, the general approach in the Terminal/Tower Control Program is to disperse some of the testing efforts to relatively small, temp-

orary test environments (e.g. contractor's plants, field trial sites, etc.) where this is advantageous and practical or is essential to meet the objectives of the particular test efforts. The provision of necessary support for test activities of this nature is normally an integral part of the activities of the subprogram with which the test effort is aligned. The objective of the Terminal Automation Test Facility supported by this subprogram is to provide an environment that will facilitate testing where proximity and accessibility to related systems, greater controllability of test variables and/or extensive instrumentation and supporting facilities are required. Activities of this nature include:

- Development and debugging of terminal system interfaces with other systems as well as between different types of terminal systems.
- Integration of proposed upgrading features and technical/operational assessment under realistic but controlled conditions representative of the range expected to be encountered in various applications.
- Conduct of live test operations with instrumented test aircraft and provisions for obtaining independent, precise, time-space position measurements.

Toward this end, the Terminal Automation Test Facility will include appropriate Expanded ARTS III, ARTS II TRACON/TRACAB, and TIPS hardware/software modules and ancillary items necessary to enable representation and testing of the various capability levels, configurations and interfaces applicable to the various terminal environments. The efforts covered by this subprogram are oriented to establishing, maintaining and updating this facility and providing associated operating services to support accomplishment of the terminal/tower development tasks under the various subprograms.

6.11 Sustaining Engineering (Subprogram 144-170)

This subprogram provides for E&D support in the determination of modifications or methods to overcome persistent or unique problems encountered in the day-to-day operation of TRACON/Tower field facilities or associated data processing and display equipment. It also provides for the periodic reduction and analysis of field recorded data samples to assess the adequacy of recently fielded upgrading packages in terms of utility, capacity and performance and to derive quantitative data pertinent to the design of future improvements.

Field problems requiring E&D assistance are generally determined by the operating services during their routine monitoring and analysis of facility problem reports. Normally, these are then conveyed to the E&D organization via a Form 9550-1, "Request for RD&E Effort", outlining the nature of the problem and assistance requested. After initial processing and investigation within E&D to determine if there is a reasonable likelihood of devising an effective solution, efforts are undertaken to develop the appropriate modifications/methods to resolve or minimize the problem. With the advent of automation systems and automatic data recording capabilities in field facilities, the potential exists to augment this process, as relates to the efficacy and performance of automation related functions, by periodic examination of data automatically recorded during facility operations. These same capabilities lend themselves to the derivation of quantitative measures of actual loading and operational conditions that will aid in trade-off determinations relevant to the detailed design of subsequent packages.

The activities of this program are to apply E&D efforts in the above areas on items applicable to TRACON/Tower operations or systems. These efforts are of a continuing and supportive nature and generally consist of:

- The investigation, design, development, verification and documentation of "fixes" or methods to correct deficiencies noted in in-service equipment or facility configurations.
- The periodic collection, reduction and assessment of data automatically recorded at representative field sites to determine such information as:
  - Maximum and average loads and rates for various categories of data (e.g., flight plan messages, tracks, radar/beacon targets, etc.).
  - Reliability and performance of detection and tracking systems.
  - Density, distribution and flight paths of aircraft within the surveillance volumes of the sensors.
  - Frequency of use of various automatic and manually initiated features.
  - Type, mix, equippage and performance profiles of controlled flights using the system.

7. IMPLEMENTATION CONSIDERATIONS AND TRANSITION OF MANAGEMENT RESPONSIBILITIES

7.1 General

Deployment and implementation activities are not ordinarily within the purview of the Engineering and Development organization, thus, implementation plans, per se, are outside the scope of this document. It is obvious, however, that development and implementation planning efforts are not totally isolable from each other or else the results will be development products with no plans to implement or implementation plans for products that are not being developed. By presenting on-going and planned E&D efforts in the context of long range end objectives, it is expected that this and companion E&D program plans will serve as the initial instruments to aid in assuring a proper mesh of implementation and development programs. The purpose of this section is to highlight some of the more significant aspects of the Terminal/Tower Control Program as they apply to implementation planning efforts and to set forth guidelines regarding the division of organizational responsibilities in transitioning from the development to implementation phase.

7.2 Field Implementation Packages

The concept for evolving from present operating system capabilities is to incrementally add to the field system through a series of field implementation packages. These packages will be comprised of the combined results of one or more development tasks configured in such a manner that they can be added to, replace, or be integrated with the in-being deployed system.

The order and content of specific implementation packages is influenced by a number of factors, including the following:

- The priority of need for a given capability as perceived by the operating services.

- The state of development (degree of readiness) of the capability sought.
- The degree of dependence of the capability sought on other capabilities and their state of development.
- The availability of funds.
- The practicalities of production and implementation.

Uncertainties in each of the above, particularly the latter four, increase as a function of the length of time projected for realization. Since all of these influencing factors have direct bearing on the decision to proceed with implementation of a given package, the ultimate content and order of specific packages is subject to frequent reassessment, adjustment and refinement as more details become available and as uncertainties are reduced. The development process is aimed at reducing technical and operational uncertainties and providing increasingly refined estimates of funding requirements.

7.3 Transition of Management Responsibilities

The definition of the point at which responsibility transitions and the methodology for the transfer have been the subjects of many discussions. One can pose a hard and fast rule which will make the planned process neat and clean but it is clear that such a rule will be violated many times in the cold pragmatism of accomplishing the program. Normally ARD will accomplish the development activity and AAT/AAF will accomplish the installation activity. It is not easy, however, to get the job done with these restraints. The following are some examples of situations which require departure from such a generalization:

- AAF has an implementation project which requires some development effort but it makes economic and temporal sense to include it as part of the system acquisition activity.
- ARD has completed a development effort and the urgency of

immediate deployment dictates that they manage the implementation.

- A field operational test and evaluation is necessary before an implementation decision is made. In this case, ARD manages the installation at the field site.
- A specific product of a development is a computer program which AAT would prefer to incorporate immediately in the field rather than wait for it to be included in a larger package. In this case, ARD will furnish appropriate software documentation directly to AAT with no AAF involvement.

For major system enhancements, ARD will include a number of development products in a technical data package for transmittal to AAF. Generally, this will be in a form to satisfy the documentation requirements for a system acquisition. Specifically, it will contain the "General Requirements" portion of a specification and, when appropriate, the "Quality Assurance" provisions. The intent is to provide hardware performance requirements and computer program functional requirements along with any special provisions necessary for system and subsystem testing.

This method of transition is the preferred way and will be followed except when found necessary to deviate. In this case, the method adopted will be based on the results of coordination among ARD, AAF and AAT on an ad hoc basis.

Closely allied with the transition of management responsibility is the configuration control function. For development products, ARD is responsible for configuration control prior to transition but afterwards it is shared between AAT and AAF. It is important to the development program that ARD continue to participate in configuration management after transition. Additionally, ARD should be represented on all configuration control boards.

7.4 Package Interdependencies

As discussed in Section 5, many of the terminal development efforts covered by this plan are closely related, and in many cases dependent on, development efforts being carried out in other programs. These dependencies also apply to the implementation effort and thus require that the acquisition and deployment of interdependent items be scheduled in a manner that will provide for concurrent implementation. To aid implementation planners in this regard, items that are essential to but not within the scope of a particular implementation package developed under this program will be identified in the description of the package.

7.5 Training Considerations

With the advent of new hardware/software packages and additional functional capabilities, it is to be expected that changes will be required in the agency's training programs and facilities. While it is highly desirable to establish and implement such changes as early as possible to assure the availability of trained personnel coincident with new hardware/software capabilities, it would hardly be prudent to embark on these efforts before a firm commitment is made to proceed with implementation of the package requiring the changes.

As part of its package definition efforts, ARD will project any special requirements for training and/or training devices associated with the package. Following a decision to proceed with implementation, actions to initiate appropriate training programs and acquire any necessary training equipment should be undertaken by the Operating Services and the Office of Training as part of the implementation program.

APPENDIX A

TIME-PHASING OF PRINCIPAL TASKS

- LEGEND -

---------- Continuous Activity

- - - - - - - Intermittent Activity

▲ E&D Specs, Ping and Definition Documents, Final Reports

Δ Item Specs, Interim Reports

Plan Ref.	SUBPROGRAM	
6.2	PLNG & SYST ENGINEERING	(142-121)
a.	Term/Twr E&D Program Plan	
b.	Term/Twr Inter-Syst Intfce Specs	
c.	Term Mod Dfntn - DABS Intgrtn	
d.	Term Intfce Dfntn - Other Systems	
6.3	ARTS III EXPANSION	(142-171)
a.	All Digital Syst Opns	
b.	All Digital Dsplys - Sat. Towers	
c.	New TRACON Display	
d.	Data Acqstn Enhancements	
e.	TIPS/ARTS III Intfce	
f.	DABS/Exp ARTS III Intfce	
	Surveillance	
	Data Link	
g.	External Intfce - Additional Systs	
	WVAS	
	ASTC	
6.4	ARTS II ENHANCEMENTS	(142-175)

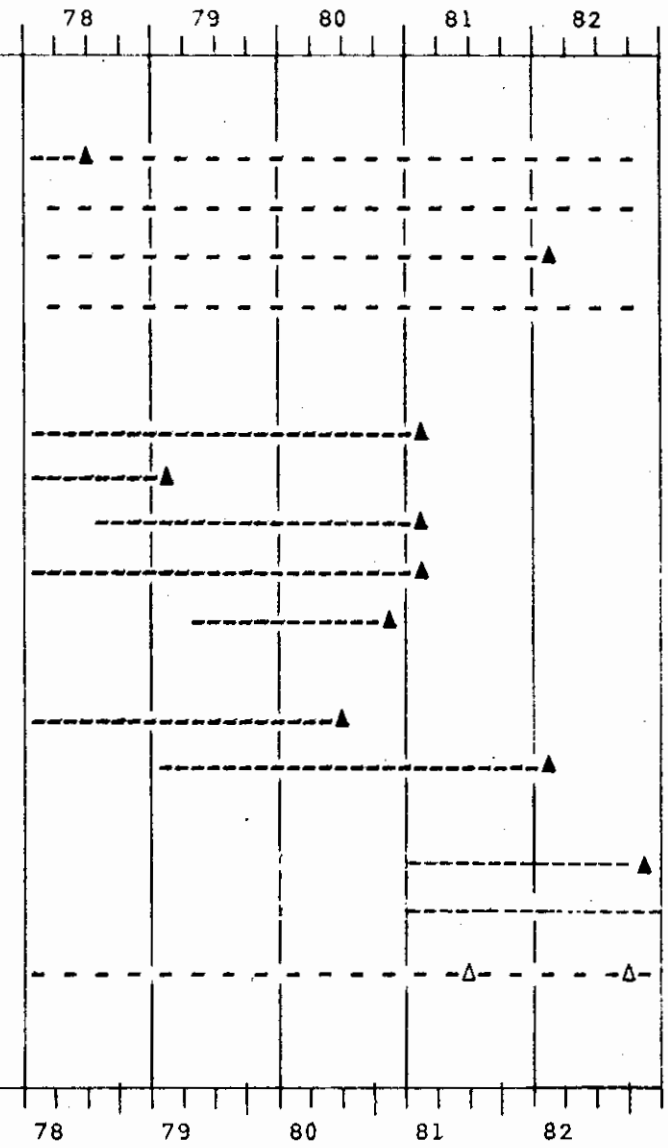

Plan Ref.	SUBPROGRAM	
6.5	TIPS	(142-173)
a.	Basic TIPS	
	Syst Fabrication	
	NAFEC Tests	
	Operational Field Trial	
b.	Enhancements	
	Low Activity Syst Dfntn	
	Intfce with new functions	
	Intfce with new and exist systms	
6.6	METERING & SPACING	(142-172)
a.	Basic Arrival M&S	
b.	Implementable M&S	
c.	M&S Expansion	
	Departure M&S	
	DABS and Data Link Intgrtn	
6.7	CNFLCT ALRT & RSLTN	(142-174)
a.	Stage I Alert	
	Single Beacon Version	
	Dual Beacon Version	

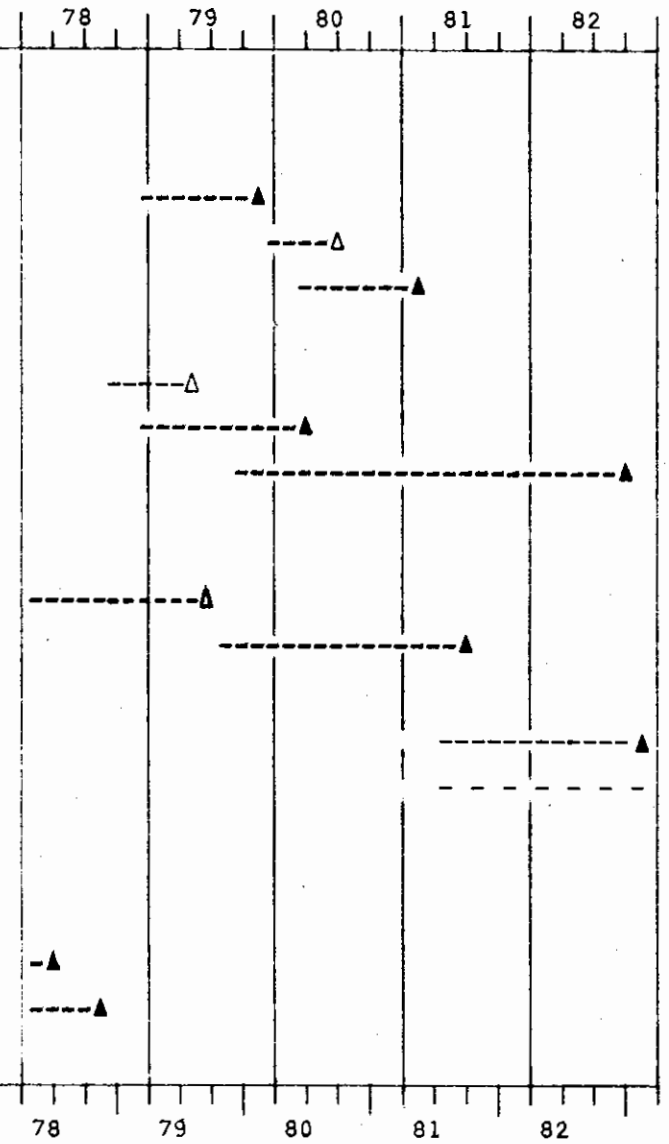

Plan Ref.	SUBPROGRAM	
b.	*Stage II Alert*	
	Single Beacon Version	
	Dual Beacon Version	
a.	*Stage III Resolution*	
6.8	ATC APLCTNS OF DATA LINK	(142-176)
	DABS Digital Data Link	
6.9	ADVANCED SYSTEM DESIGN	(142-178)
	Dfntn of Prime Considerations	
	Dfntn of Syst Characteristics	
6.10	TATF	(142-179)
6.11	SUST ENGINEERING	(144-170)
	In-Serv Impvmnts	
	Performance Assessment	

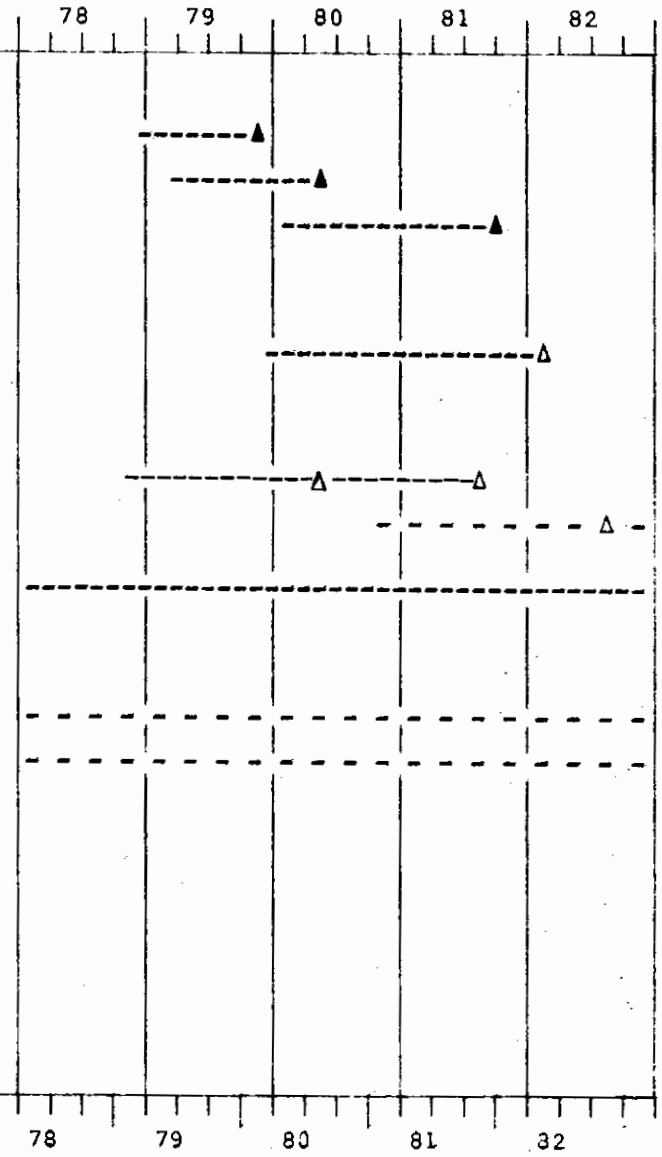

APPENDIX B

ESTIMATED FUNDING REQUIREMENTS

FOR PROGRAM 14 - TERMINAL/TOWER CONTROL

This appendix summarizes the estimated funding requirements to support the development projects described in Section 6 of this plan. The funding summary shown in Table B-I represents the yearly level of expenditure that is judged to be necessary to carry out the development program according to the schedules shown in Appendix A.

The funding estimates in Table B-II present total costs for all resources required to support the various Terminal/Tower Subprograms. The total costs include funding for: Systems Research and Development Service personnel; NAFEC personnel, support facilities, and services; system engineering contractor support; and development contractor support for hardware and software. Both the project schedules and actual expenditures depend upon the availability of estimated funds as well as the expeditious processing of procurement actions to obtain contractor support.

TABLE B-I

SUMMARY OF FUNDING REQUIREMENTS
FOR TERMINAL/TOWER CONTROL PROGRAM

(Dollars in Thousands)

PROGRAM 14 RESOURCE REQUIREMENTS	FY-79	FY-80	FY-81	FY-82	FY-83
TERMINAL/TOWER DEVELOPMENT	8,283	8,974	9,800	11,200	11,200
SUSTAINING ENGINEERING (F&E/E&D FUNDS)	740	740	980	980	980
AIRPORT SURFACE TRAFFIC CONTROL**	1,949	1,617	2,500	2,500	2,500
TOTALS	10,972	11,331	13,280	13,280	14,680

**Described in Report No. FAA-RD-78-4 Project Plan: Tower Automated Ground Surveillance System Development Program, January 1978

TABLE B-II

ESTIMATED FUNDING REQUIREMENTS
FOR TERMINAL/TOWER CONTROL SUBPROGRAMS*

(Dollars in Thousands)

Plan Ref.	SUBPROGRAM	Subprogram Number	FY-79	FY-80	FY-81	FY-82	FY-83
6.2	Planning & Syst. Engineering	142-121	1,095	1,185	1,200	1,300	1,300
6.3	ARTS III Expansion	142-171	2,224	1,450	1,450	500	-
6.4	ARTS II Enhancements	142-175	-	985	720	920	920
6.5	Term. Info. Process. System	142-173	1,050	410	100	100	-
6.6	Metering and Spacing	142-172	818	439	1,700	1,400	1,400
6.7	Conflict Alert & Resolution	142-174	553	772	100	100	-
6.8	ATC Aplctns of Data Link	142-176	1,063	1,161	600	500	500
6.9	Advanced System Design	142-178	-	822	2,100	4,080	4,780
6.10	Term. Auto Test Facility	142-179	1,470	1,750	1,830	2,300	2,300
6.11	Sustaining Engineering	144-170	740	740	980	980	980
		TOTALS	9,023	9,714	10,780	12,180	12,180

*These funding estimates include funding requirements for both in-house and contractor support.