Report No. FAA-ED-18-6

COPY 1
2
'80

ENGINEERING AND DEVELOPMENT PROGRAM PLAN
AIRCRAFT CRASHWORTHINESS

FEDERAL AVIATION ADMINISTRATION
SEP 9 1980
TECHNICAL CENTER LIBRARY
ATLANTIC CITY, N.J. 08405

JUNE 1980

Document is available to the U.S. public through
the National Technical Information Service,
Springfield, Virginia 22161.

Prepared for

U. S. DEPARTMENT OF TRANSPORTATION
FEDERAL AVIATION ADMINISTRATION
TECHNICAL CENTER
Atlantic City, New Jersey 08405

FAA TECHNICAL CENTER LIBRARY NJ
United State/Engineering and development
00008158

APPROVED: _____
Director, Federal Aviation Administration Technical Center

Technical Report Documentation Page

1. Report No.	2. Government Accession No.	3. Recipient's Catalog No.
FAA-ED-18-6		

4. Title and Subtitle	5. Report Date
ENGINEERING AND DEVELOPMENT PROGRAM PLAN AIRCRAFT CRASHWORTHINESS	June 1980
	6. Performing Organization Code: ACT-330
7. Author(s): Caesar A. Caiafa and Lawrence M. Neri	8. Performing Organization Report No.: FAA-CT-80-166
9. Performing Organization Name and Address: Federal Aviation Administration, Technical Center, Atlantic City, New Jersey 08405	10. Work Unit No. (TRAIS)
	11. Contract or Grant No.: 182-520-100
12. Sponsoring Agency Name and Address: U.S. Department of Transportation, Federal Aviation Administration, Technical Center, Atlantic City, New Jersey 08405	13. Type of Report and Period Covered: Program Plan
	14. Sponsoring Agency Code

15. Supplementary Notes

16. Abstract

The Aircraft Crashworthiness Program Plan is designed to reduce or prevent aircraft occupants from incurring serious or fatal injuries in a "survivable" crash impact accident by incorporating crashworthy design features into the initial stages of fixed-wing and rotary-wing aircraft development. It describes a 5-year development program for both airplanes and rotorcraft. It identifies five major subprogram areas for study and analysis to accomplish the program's goals: (1) Airframes; (2) Cabin Safety; (3) Fuel System Protection; (4) Emergency Evacuation System; and (5) Standards, Criteria, and Procedures. The plan emphasizes utilization of available background data; development of analytical techniques; validation of analytical techniques; validation of data to determine feasibility/acceptability; and transmittal of appropriate data for consideration as the basis for regulation, standards, etc. The Federal Aviation Administration (FAA) groups, other Government agencies/departments and industry organizations participating in this effort are identified. Program schedule with milestones is presented. Program management and funding requirements are also identified.

17. Key Words	18. Distribution Statement
Helicopters (Rotorcraft) Emergency Evacuation Systems — Airframes Analytical Techniques — Crashworthiness Full-Scale Testing — Cabin Safety Fuel System Protection — Airplanes	Document is available to the U.S. public through the National Technical Information Service, Springfield, Virginia 22161

19. Security Classif. (of this report)	20. Security Classif. (of this page)	21. No. of Pages	22. Price
Unclassified	Unclassified	52	

Form DOT F 1700.7 (8-72) Reproduction of completed page authorized

METRIC CONVERSION FACTORS

Approximate Conversions to Metric Measures

Symbol	When You Know	Multiply by	To Find	Symbol
		LENGTH		
in	inches	*2.5	centimeters	cm
ft	feet	30	centimeters	cm
yd	yards	0.9	meters	m
mi	miles	1.6	kilometers	km
		AREA		
in^2	square inches	6.5	square centimeters	cm^2
ft^2	square feet	0.09	square meters	m^2
yd^2	square yards	0.8	square meters	m^2
mi^2	square miles	2.6	square kilometers	km^2
	acres	0.4	hectares	ha
		MASS (weight)		
oz	ounces	28	grams	g
lb	pounds	0.45	kilograms	kg
	short tons (2000 lb)	0.9	tonnes	t
		VOLUME		
tsp	teaspoons	5	milliliters	ml
Tbsp	tablespoons	15	milliliters	ml
fl oz	fluid ounces	30	milliliters	ml
c	cups	0.24	liters	l
pt	pints	0.47	liters	l
qt	quarts	0.95	liters	l
gal	gallons	3.8	liters	l
ft^3	cubic feet	0.03	cubic meters	m^3
yd^3	cubic yards	0.76	cubic meters	m^3
		TEMPERATURE (exact)		
°F	Fahrenheit temperature	5/9 (after subtracting 32)	Celsius temperature	°C

*1 in = 2.54 (exactly). For other exact conversions and more detailed tables, see NBS Misc. Publ. 286, Units of Weights and Measures, Price $2.25, SD Catalog No. C13.10:286.

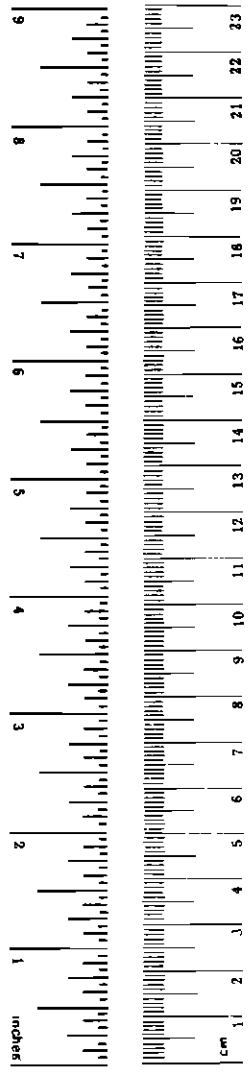

Approximate Conversions from Metric Measures

Symbol	When You Know	Multiply by	To Find	Symbol
		LENGTH		
mm	millimeters	0.04	inches	in
cm	centimeters	0.4	inches	in
m	meters	3.3	feet	ft
m	meters	1.1	yards	yd
km	kilometers	0.6	miles	mi
		AREA		
cm^2	square centimeters	0.16	square inches	in^2
m^2	square meters	1.2	square yards	yd^2
km^2	square kilometers	0.4	square miles	mi^2
ha	hectares (10,000 m^2)	2.5	acres	
		MASS (weight)		
g	grams	0.035	ounces	oz
kg	kilograms	2.2	pounds	lb
t	tonnes (1000 kg)	1.1	short tons	
		VOLUME		
ml	milliliters	0.03	fluid ounces	fl oz
l	liters	2.1	pints	pt
l	liters	1.06	quarts	qt
l	liters	0.26	gallons	gal
m^3	cubic meters	35	cubic feet	ft^3
m^3	cubic meters	1.3	cubic yards	yd^3
		TEMPERATURE (exact)		
°C	Celsius temperature	9/5 (then add 32)	Fahrenheit temperature	°F

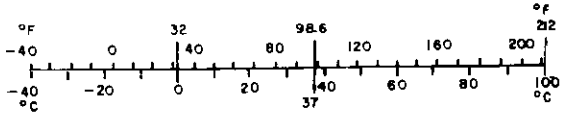

This document is disseminated under the sponsorship of the Department of Transportation in the interest of information exchange. The contents do not necessarily reflect the official views or policy of the Department of Transportation. This Plan does not constitute a standard, specification, or regulation. The United States Government assumes no liability for its contents or use thereof.

Subsequent revisions, amendments, or adjustments to this Technical Program Plan may be initiated, based on project additions (or deletions), major funding level changes, and schedule revisions.

TABLE OF CONTENTS

	Page
EXECUTIVE SUMMARY	vi
Introduction	vi
Objective	vi
Critical Issues	vi
Technical Approach	vii
Program Management	vii
Funding and Scheduling	vii
1.0 CRASHWORTHINESS PROGRAM	1
1.1 Problem	1
1.2 Program Structure	2
1.3 Critical Issues	2
1.4 Technical Approach	2
1.5 Coordination	3
2.0 AIRFRAMES	3
2.1 Objective	3
2.2 Technical Approach	4
2.3 Support	10
2.4 Critical Technological Issues	10
2.5 End Products	11
2.6 Funding and Scheduling	11
3.0 CABIN SAFETY-SEAT/RESTRAINT SYSTEMS AND INTERIOR FURNISHINGS	11
3.1 Objective	16
3.2 Technical Approach	16
3.3 Support	19
3.4 Critical Technological Issues	20
3.5 End Products	20
3.6 Funding and Scheduling	20
4.0 FUEL SYSTEM PROTECTION	20
4.1 Objectives	23
4.2 Technical Approach	30
4.3 Support	32
4.4 Critical Technological Issues	33
4.5 End Products	33
4.6 Funding and Scheduling	33

TABLE OF CONTENTS (Continued)

		Page
5.0	EMERGENCY EVACUATION SYSTEM	33
	5.1 Objective	36
	5.2 Technical Approach	36
	5.3 Support	39
	5.4 Critical Technological Issues	39
	5.5 End Products	40
	5.6 Funding and Scheduling	40
6.0	CRASHWORTHINESS BRANCH PROGRAM MANAGEMENT	40
	6.1 Functions	40
7.0	FUTURE PROGRAM PRODUCTS (PARTIAL LISTING)	42

LIST OF ILLUSTRATIONS

Figure		Page
ES-1	Crashworthiness Program Elemental Concept	viii
ES-2	Program Coordination	ix
ES-3	Program Funding and Milestone Schedule Summary	x
1	Lumped MASS Computer Simulation	5
2	Airframes Subprogram Elements	6
3	Program KRASH Development	7
4	Airframes Subprogram Funding and Major Milestones (3 Sheets)	12
5	Three Dimensional Seat-Occupant Computer Model	15
6	Cabin Safety Subprogram Elements	17
7	Cabin Safety Funding and Major Milestones (2 Sheets)	21
8	Typical Light Twin-Engined Aircraft Left Main Fuel Cell	24
9	Two-Ply Crash-Resistant Fuel Tank	25
10	Installation of Two-Ply Crash-Resistant Fuel Cell In Typical Light Twin-Engined Aircraft Wing	26
11	Frangible Coupling Mounted to Fuel Cell Mounting Flange	27
12	Typical Frangible Coupling Installation (Wing Root)	28
13	Typical Light Twin-Engined Aircraft Impact Test (Note: Left Wing Contains Crash-Resistant Fuel Cell)	29
14	Fuel System Protection Subprogram Elements	31
15	Fuel Systems Funding and Major Milestones (2 Sheets)	34
16	Emergency Evacuation Systems Subprogram Elements	38
17	Emergency Evacuation Funding and Major Milestones	41

EXECUTIVE SUMMARY

INTRODUCTION.

Crashworthiness may be defined as the ability of the aircraft structure, interior, and furnishings, to maintain adequate survivable space for passengers and crew in a crash environment. This technology has evolved from the realization, that despite continuous safety prevention efforts to reduce or eliminate aircraft accidents, these accidents will occur.

For many years, emphasis in aircraft accident investigation was placed on finding the probable cause of the accident with a lesser effort expended in the crash survival aspects of aviation safety. In the early 1960's, the United States (U.S.) Army began to reverse this ideological thinking trend by initiating long-range programs to study all aspects of aircraft safety and survivability, particularly related to helicopters. It has now become apparent through detailed accident investigations and associated analysis, that improvements could be made during the preliminary design stages to improve occupant survivability in the crash environment.

Today, the Federal Government has committed considerable resources to the study of crashworthiness. Ultimately, crashworthiness design features will be incorporated into the aircraft design, not only to increase occupant survivability but to minimize aircraft damage in a crash environment.

OBJECTIVE.

The objective of the Federal Aviation Administration (FAA) Aircraft Crashworthiness Development Program is to reduce or prevent occupant injuries and fatalities in a crash-impact accident (takeoff, approach, landing) by incorporating crashworthiness design features into the preliminary stages of aircraft development.

CRITICAL ISSUES.

The following are major issues that have been identified for study and analysis by the FAA and the Technical Center:

1. Airframes - ability of the aircraft structure to maintain survivable space for occupants throughout a crash.

2. Cabin Safety - ability of the seats/restraint systems and interior furnishings to withstand crash impact loads without injury to occupant.

3. Fuel System Protection - ability of fuel tanks to resist rupture regardless of the degree of failure of the surrounding structure.

4. Emergency Evacuation System - means available to occupants for self-evacuation in an emergency situation.

5. Regulations for Certification - existing certification regulations and, where necessary, provide revised or new certification procedure and criteria.

The Crashworthiness Program's elemental concept is presented in figure ES-1.

TECHNICAL APPROACH.

The approach to accomplish the Crashworthiness Program objectives will be as follows:

1. Utilization of available background data.

2. Development of analytical techniques, fixed wing and rotorcraft.

3. Validation of analytical techniques.

4. Cost/benefit analysis of data to determine feasibility/acceptability.

5. Transmittal of appropriate data for consideration as the basis for regulations, standards, criteria, etc.

PROGRAM MANAGEMENT.

The overall management of the Crashworthiness Program will be performed by the Crashworthiness Branch, ACT-330. The major participants within the FAA include: Office of Aviation Safety (ASF), Office of Systems Engineering Management (AFM), the FAA Operating Services, the Civil Aeromedical Institute (CAMI), and the Technical Center. Participating groups outside the agency include the Department of Defense (DOD), National Aeronautics and Space Administration (NASA), and industry. These working interfaces are illustrated in figure ES-2.

FUNDING AND SCHEDULING.

Total funding requirements and subprogram task scheduling are presented in figure ES-3.

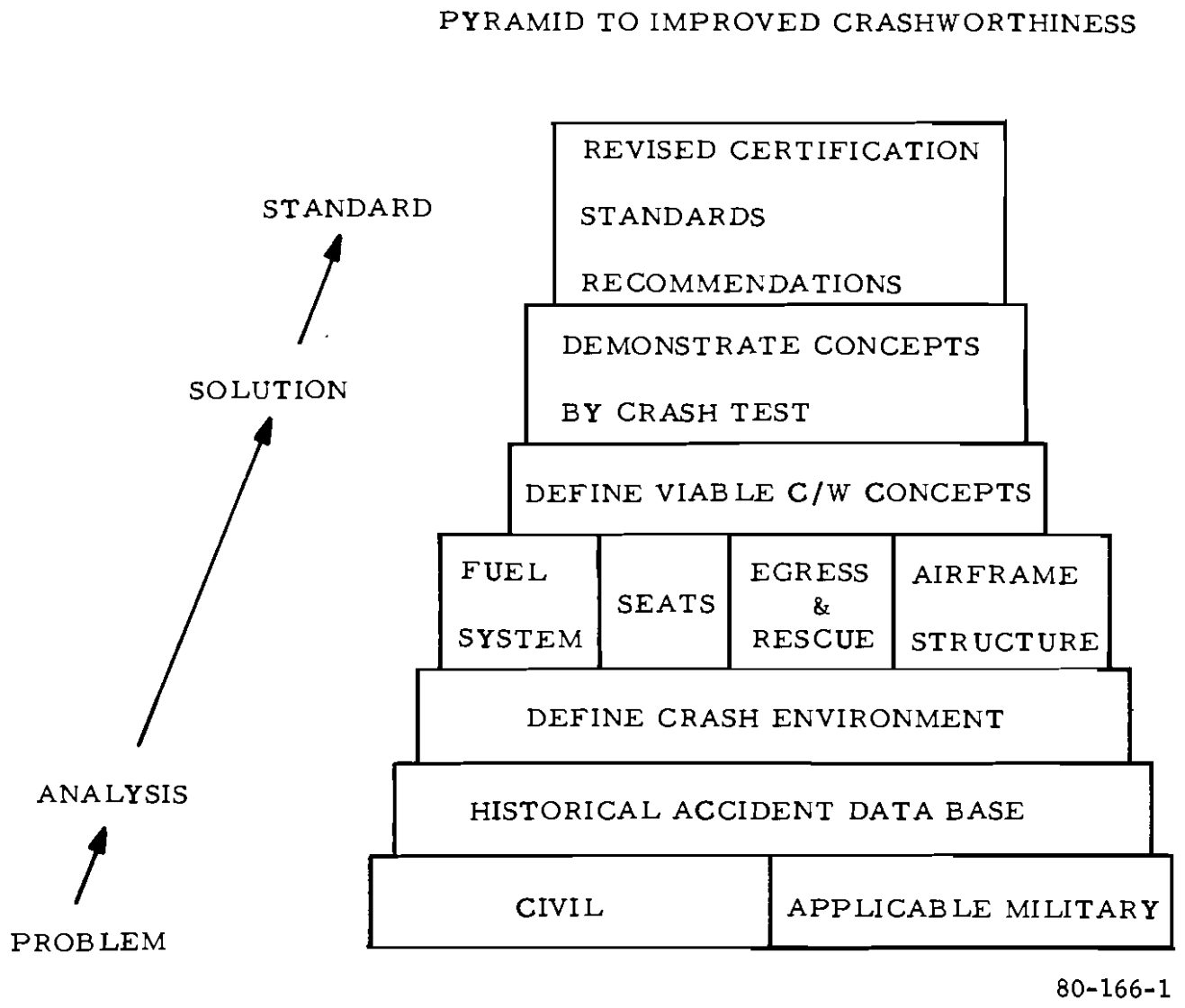

FIGURE ES-1. CRASHWORTHINESS PROGRAM ELEMENTAL CONCEPT

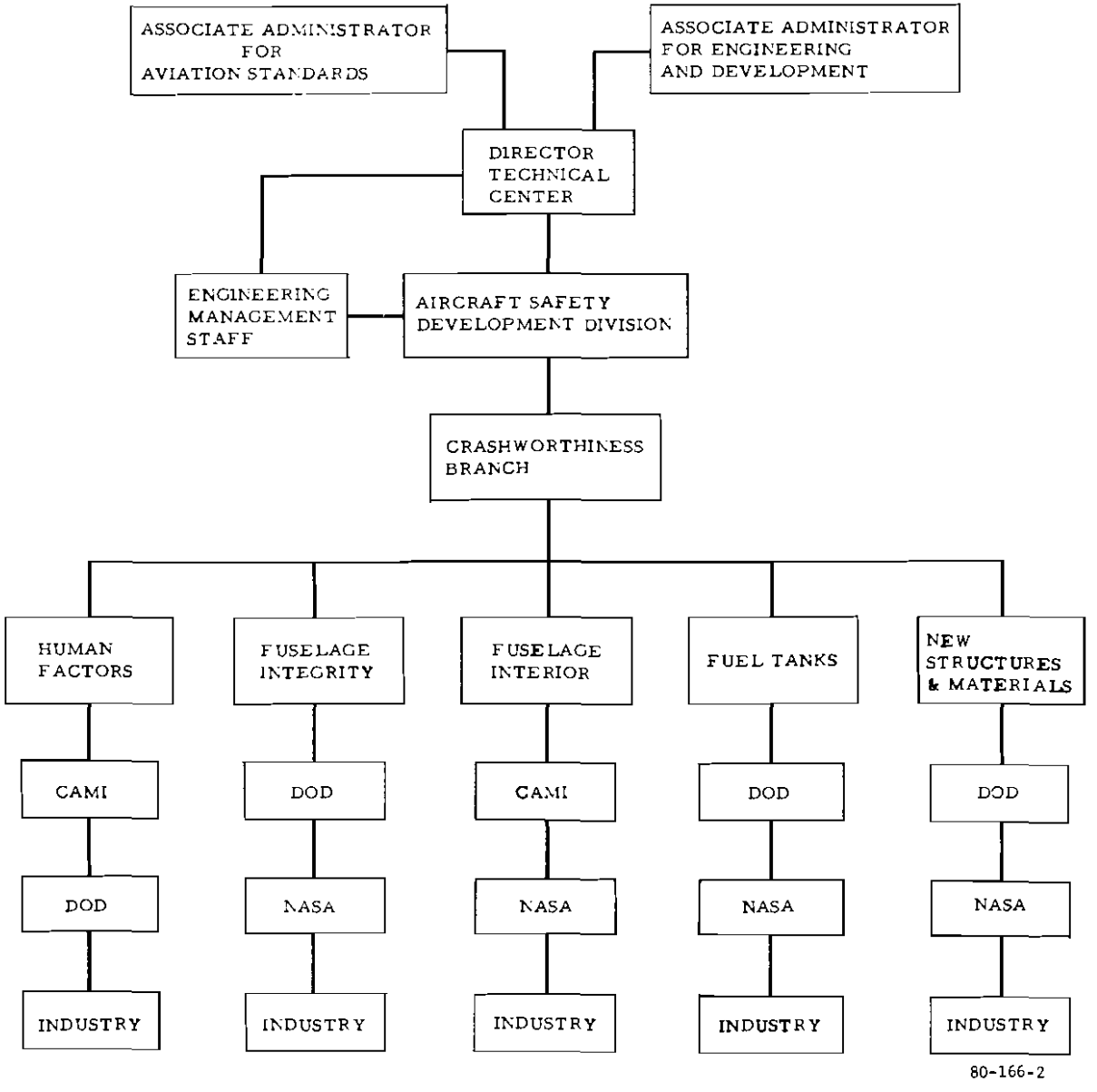

FIGURE ES-2. PROGRAM COORDINATION

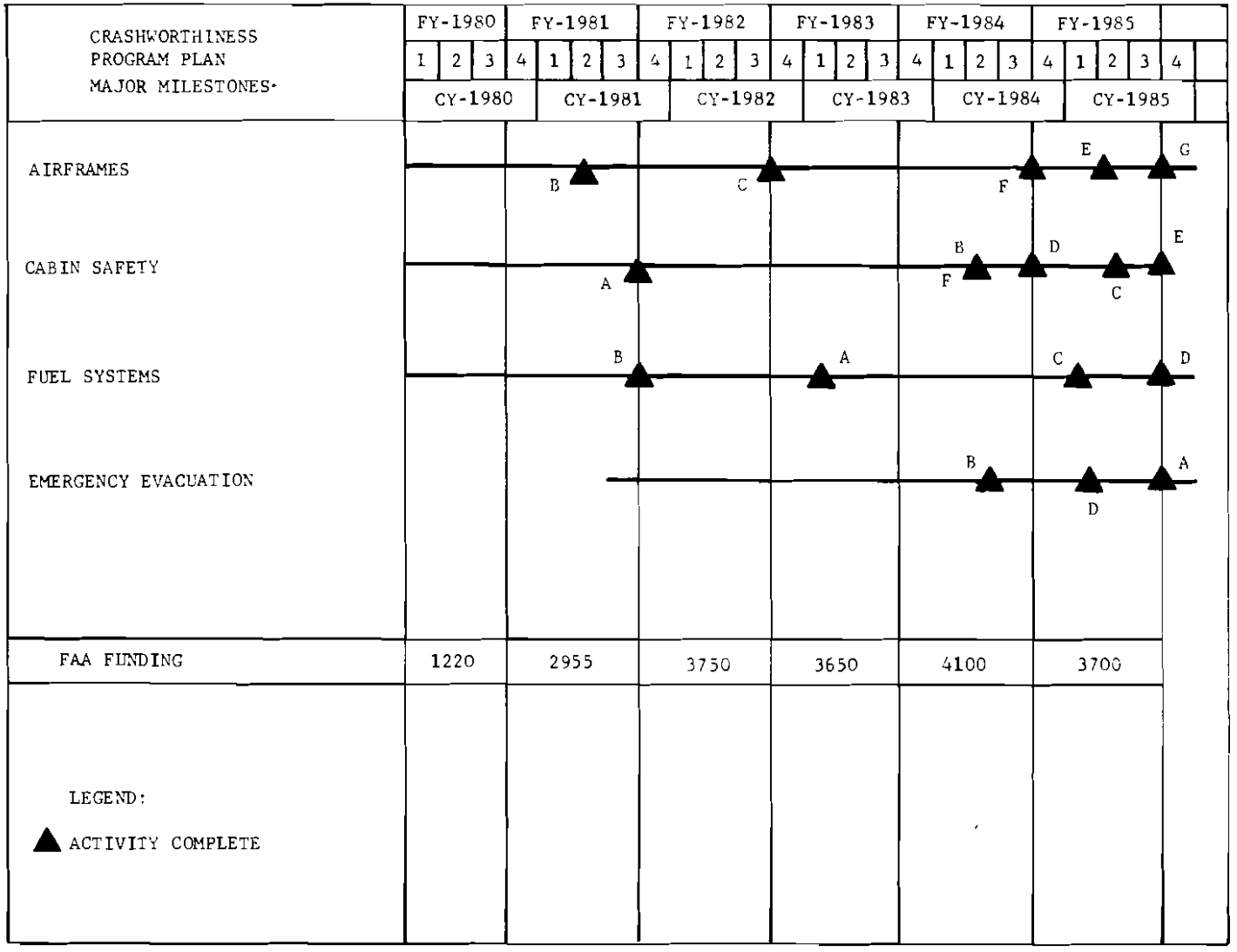

NOTE: ALL VALUES GIVEN IN THOUSANDS OF DOLLARS.

80-166-3

FIGURE ES-3. PROGRAM FUNDING AND MILESTONE SCHEDULE SUMMARY

1.0 CRASHWORTHINESS PROGRAM.

The objective of the Crashworthiness Program is to increase passenger and crew survivability in the event of an accident involving civil type aircraft. Previously, all accidents were investigated with emphasis placed on determinig the cause, with lesser thought given to the crash survival aspects. Within the past two decades, designers have made tremendous strides in the crashworthiness field, but still, these achievements represent only the embryonic stages of a growing technology. This emerging technology will give full consideration to the dynamics of an accident as related to:

a. Bio-Mechanics.
b. Structure.
c. Protective Systems.
d. Emergency Evacuation.

The scope of this effort includes all civil aircraft, both fixed and rotary wing.

This Engineering and Development Program Plan presents the agency's program for accomplishing these crashworthiness safety efforts. The plan describes these efforts, the requirements for them, their outputs and how they are utilized, and the funding requirements for the next 5-year period. The Crashworthiness Program is structured to accomplish these goals, and the details are presented in the following sections.

1.1 PROBLEM.

The Federal Aviation Act of 1958, as revised, empowers the Secretary of Transportation to "undertake or supervise such developmental work and service testing as tends to the creation of improved aircraft, aircraft engines, propellers, and appliances" (Section 312). He is also empowered "... and it shall be his duty to promote safety of flight of civil aircraft in air commerce by prescribing and revising from time to time:

a. Such minimum standards governing the design of aircraft, as may be required in the interest of safety;

b. Such minimum standards governing appliances as may be required in the interest of safety."

These basic legal requirements are acted upon by the agency's engineering and development (E&D) crashworthiness efforts in terms of:

a. Response to specific requests from the operating Offices and Services of the agency to provide the basis for new rulemaking, new operating procedures, or new advisory publications.

b. E&D on recognized crashworthiness safety problems that exist or are forecast to arise pertinent to the aircraft and its components, as they relate to occupant safety.

c. E&D to provide a knowledge and data base to establish crashworthiness standards and means to comply with these standards for new aircraft designs that will be presented to the agency for certification.

1.2 PROGRAM STRUCTURE.

The crashworthiness research and development program consists of four major subprogram elements:

a. Airframes.
b. Cabin Safety (Seats/Restraint Systems, Cabin Interior Furnishings).
c. Fuel System Protection.
d. Emergency Evacuation Systems.

1.3 CRITICAL ISSUES.

The critical issues associated with the successful accomplishment of this effort are centered around:

a. Development of Crash Impact Scenarios.

1. Research and evaluation of accident data.
2. Categorization of crash impact conditions.

b. Dynamic Response of Aircraft Structure, Subsystems, and Cabin Environment relative to Occupant Survivability

1. Identification of structures and subsystem failure patterns.

c. Availability of Test Facilities.

1. Capabilities to handle heavy-weight structures at high impact velocities.

1.4 TECHNICAL APPROACH.

The tasks delineated within each subprogram element are efforts which need research to meet crashworthiness safety requirements. Portions of the program may be accomplished at the Technical Center or through outside contracts, including interagency agreements (IA) which allow the FAA the expeditious access to, and use of, other agencies' in-house and contractual capabilities (see figure 2).

The efforts primarily funded by the FAA will be:

a. Develop design criteria to determine dynamic impact responses (KRASH) for aircraft structures, both fixed and rotary wing.

b. Analysis for seat/occupant restraint system (single and multiple occupants/seats).

c. Development of potentially survivable crash impact scenarios (airplanes and helicopters).

d. Helicopter applications for KRASH technology,
e. Crash resistant fuselage and wing center section fuel tank development.
f. Improved emergency evacuation systems.

FAA is supporting the following studies:

a. Definition of human injury tolerance limitations.
b. Integration of seat analysis with airframe analysis.
c. New seat concept studies.
d. Basic structural design concepts and analysis procedures for aircraft made of metal and advanced materials (i.e., composites).
e. Assessment of economic impact of crashworthiness concepts.

1.5 COORDINATION.

It is anticipated that the Technical Center, DOD, NASA, and other interested Government agencies will form an interagency working group(s) with appropriate membership designated by the parent agencies.

For specific parent agency program interests, whereby selected support or task accomplishment is desired, IA's and/or task order agreements will be initiated. These actions will be implemented if they are advantageous and mutually beneficial. The working groups will meet at periodic intervals to discuss program developments and to exchange any pertinent information.

2.0 AIRFRAMES.

Selected aircraft crash analyses have indicated that the ability to apply crashworthiness criteria into the basic structural configuration early in the design cycle would save lives. In the past, static analysis techniques have been applied by manufacturers to evaluate dynamic conditions, i.e., crash impact conditions. Previous research and development (R&D) efforts by the aviation community have attempted to develop some rational techniques for determining the dynamic response of aircraft structures to a crash impact environment.

New and advanced computer technology has provided the impetus by which the FAA, other Government agencies, and industry attempt to develop feasible crashworthy aircraft designs. Utilizing this approach, the U.S. Army has developed crashworthy helicopter designs and is presently investigating crashworthiness design features for light aircraft.

Grumman Aerospace, under contract to FAA and NASA, has developed analytical computer programs utilizing the state-of-the-art engineering advances to design and analyze crashworthy aircraft structures subjected to a crash impact environment. Successful accomplishment of this program effort will require the cooperation of the Government agencies and industry.

2.1 OBJECTIVE.

To develop and validate analytical methods and procedures, based on state-of-the-art technology, to be utilized in the crashworthiness design of aircraft/rotorcraft. The objective is categorized in two phases:

a. Phase I - Short-Term Objectives - is to utilize existing technology for the smaller type aircraft; namely, general aviation.

b. Phase II - Long-Term Objective - is to expand upon the above program for application to the more complex aircraft structure; namely, transport category airplane and rotorcraft.

2.2 TECHNICAL APPROACH.

The stated objectives will be achieved initially by researching the existing analytical methods and test data available from other federal agencies, armed forces, or industry. In recent years, for example, the U.S. Army, in cooperation with NASA, has directed much of their R&D resources toward the development of crashworthy design for combat aircraft.

To date, these methods have involved analytical computer models applied to the less complex type of structures, such as general aviation aircraft and utility helicopters. Program KRASH is such a model; this program involves a computer simulation of airplane structural response to crash impact conditions (figure 1).

Program KRASH was initiated by the U.S. Army for the prediction of helicopter crashworthiness. The FAA expanded its capability, making it a tool for use by the general aviation manufactures. This effort was undertaken in response to agency needs for improving the crashworthiness design of general aviation fixed-wing aircraft. Program KRASH developmental requirements were general in nature and described the desired capabilities to: (1) represent aircraft structure and impact conditions; (2) utilize computer equipment and language generally available to the industry; and (3) automate as much of the program as possible to minimize technical expertise needed for its use.

A detailed three-volume users' manual was prepared in 1977 describing the program, data preparation, possible problem areas, and means to avoid such problems in the use of the program. Program listings, two sample problems, and results interpretation were included as an end product of this effort.

The proposed efforts within the subprogram will provide a sound technical basis for expanding Program KRASH from helicopters/small aircraft to medium size, transport category airplanes.

As experience is gained in the utilization of crash impact modeling, correlative work will be undertaken to verify the model's applicability to the larger and more complex transport category aircraft structures.

2.1.1 Major Tasks.

The major subprogram elements are presented in figure 2.

2.1.1.1 Short-Term Tasks.

TASK A - GENERAL AVIATION: Complete the development and documentation of Program KRASH for general aviation airframes (figure 3).

Milestones: Completed FY-79

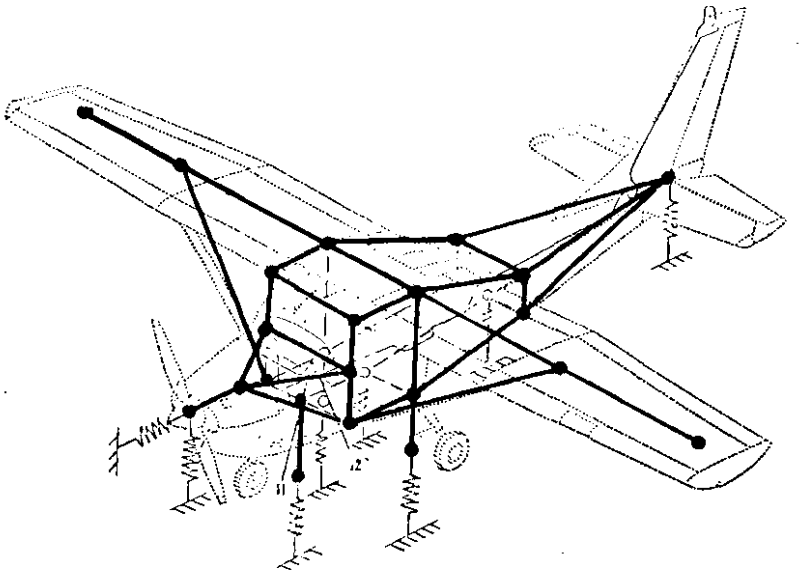

(A) AIRPLANE

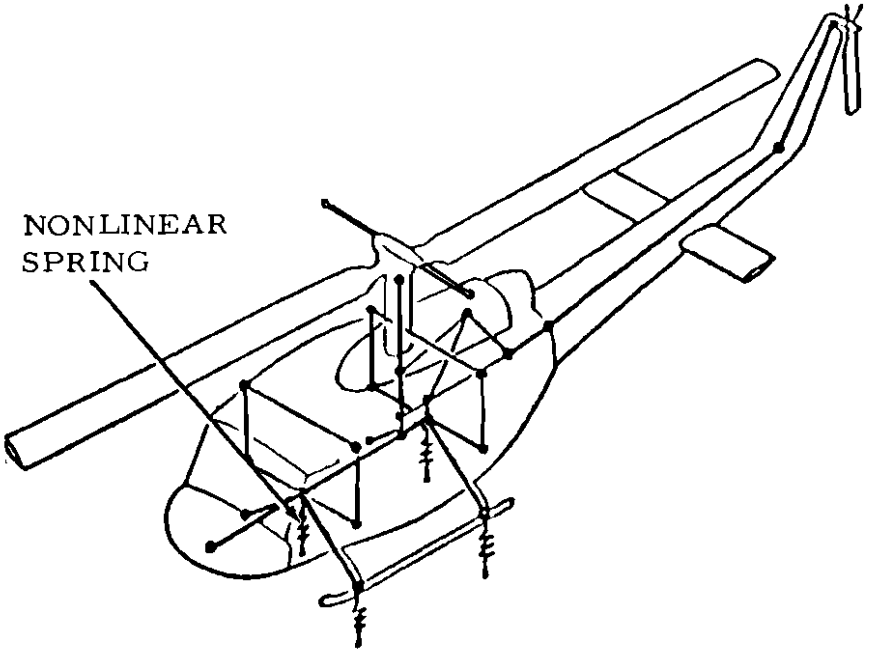

(B) HELICOPTER

80-166-4

FIGURE 1. LUMPED MASS COMPUTER SIMULATION

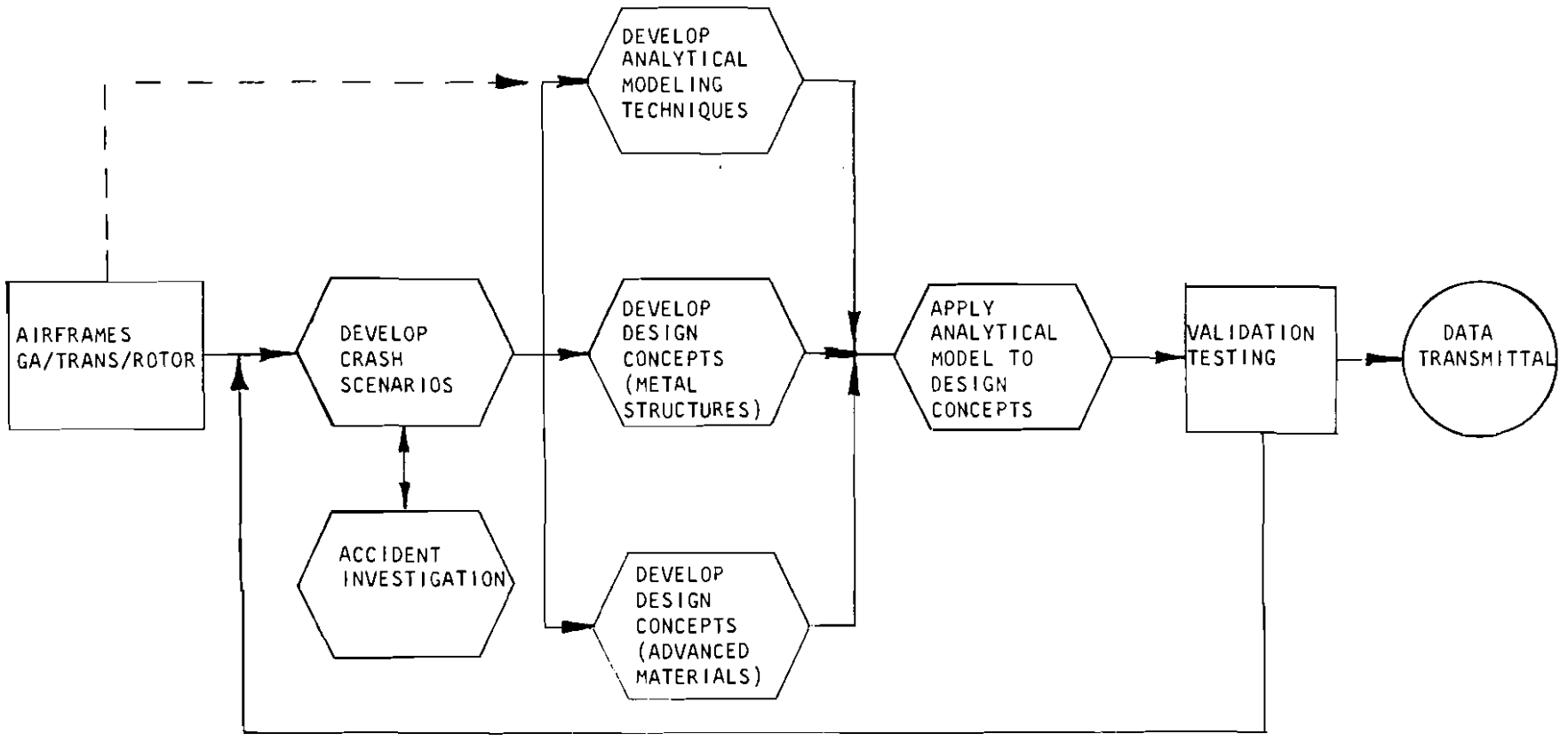

FIGURE 2. AIRFRAMES SUBPROGRAM ELEMENTS

A. PROGRAM KRASH MATHEMATICAL MODEL

1. DEVELOP A THREE-DIMENSIONAL MATHEMATICAL MODEL.
2. PREDICT FORCES, VELOCITIES, ACCELERATIONS, DISPLACEMENTS, ETC. ALONG THE THREE AXES.
3. SIMULATE VARIOUS CRASH IMPACTS AND CONFIGURATIONS OF GENERAL AVIATION AIRPLANES
4. SIMULATE SURVIVABLE CRASH CONDITIONS AND THE ENTIRE CRASH SEQUENCE.

B. GENERAL AVIATION AIRCRAFT CRASHWORTHINESS ANALYSIS

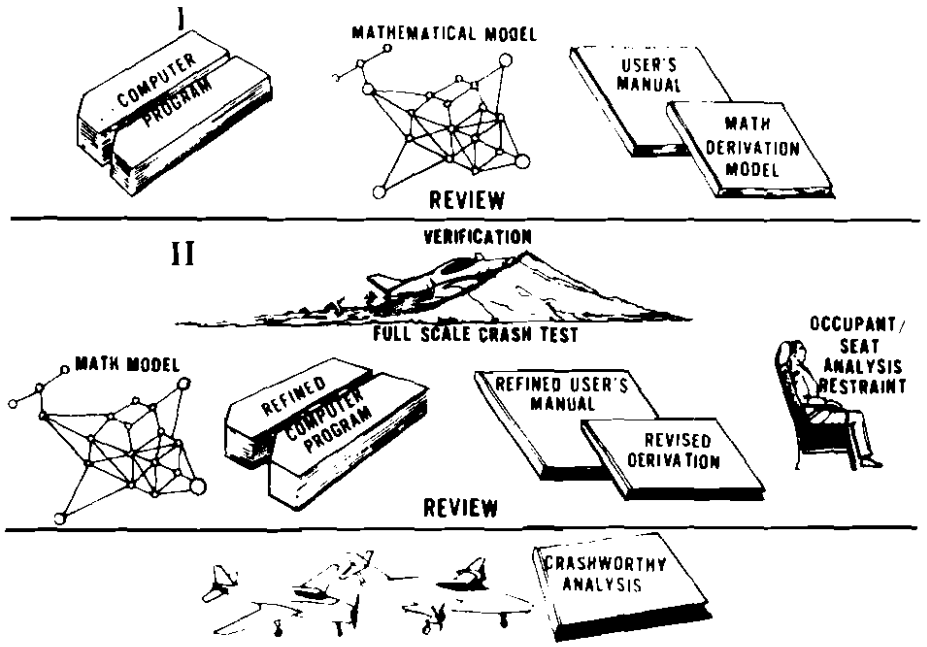

80-166-6

FIGURE 3. PROGRAM KRASH DEVELOPMENT

TASK B - GENERAL AVIATION: Application and evaluation of Program KRASH by general aviation aircraft manufacturers.

a. Phase I - FAA contractural award to general aviation manufacturers to develop their expertise in the use of Program KRASH.

b. Phase II - Evaluation of Program KRASH to determine the limitations with respect to aircraft, size, weight, and structure.

Fundings:	FY-80	FY-81
	$200K	50K
Milestone:	Completion	FY-81

TASK C - ROTORCRAFT APPLICATION

a. Phase I - Develop crash impact scenarios for civil rotorcraft (reference: U.S. Army data) and adapt Program KRASH.

Funding:	FY-80	FY-81
	$450K	-0-
Milestone:	Completion	FY-81

b. Phase II - Investigation of crash impact characteristics of rotorcraft composite structures.

Funding:	FY-80	FY-81	FY-82	FY-83	FY-84	FY-85
	$100K	$325K	$100K	$100K	$100K	$100K
Milestone:	Completion	FY-85				

TASK D - TRANSPORT CATEGORY: Development of crash impact scenarios for small/medium and large transport category airplanes.

a. Phase I - Develop crash impact scenarios based upon an investigation of past transport category aircraft accidents and incidents.

1. Determine the crash impact environment to which the airframe will be subjected.

These studies will include those parameters which contributed to occupant fatalities or injuries; i.e., impact conditions, breakup patterns of airframes, cabin interior, fuel system, etc.

b. Phase II - Assess existing analytical methods for adaptability to non-linear design and, if required, refine existing method or develop new analytical approach.

c. Phase III - Procure, design, and/or develop facilities and test articles to validate any existing or newly developed analytical techniques.

d. Phase IV - Develop a means of documenting pertinent crashworthiness data from future accidents/incidents; such data would be useful in recommending improved crashworthiness design criteria for new generation transport category aircraft.

Funding:	FY-80	FY-81	FY-82	FY-83	FY-84	FY-85
	100K	100K	100K	100K	100K	100K
Milestone:	Completion	FY-85				

NOTE: TASK D will be funded by FAA/NASA and administered by NASA under IA Number DOT-FA-79-NAI-070, dated July 26, 1979.

2.2.1.2 Long-Term Tasks.

The long-term tasks; E, F, G, H, and I, will be included in more detail as part of a NASA planning document. The management and funding for these tasks will be predominately NASA's with support from the Technical Center as indicated.

TASK E - TRANSPORT CATEGORY

a. Phase I - Develop methodology and define procedures for analyzing large transport category airframes by introducing simple plate elements into computer programs; Plastic and Large Deflection Analysis of Structures (PLANS) and Dynamic Analysis of Structures (DYCAST).

b. Phase II - Evaluate the performance of nonlinear finite element techniques and nonlinear hybrid computer programs as applied to large transport category airframes.

c. Phase III - Update revisions of existing crash impact methodologies to include nonlinear techniques.

1. PLANS, rather than being one comprehensive computer program, is a collection of finite element programs used for the static nonlinear analysis of structures.

2. DYCAST is a subprogram of PLANS and is a nonlinear finite element technique used to predict the dynamic response of aircraft structure to the crash environment.

Funding:	FY-81	FY-82	FY-83	FY-84	FY-85
	$400K	$300K	$200K	$200K	$200K
Milestone:	Completion	FY-85			

TASK F - TRANSPORT CATEGORY

a. Phase I - Together with industry, identify new and improved energy absorption design concepts for large transport category airframes and subsystems. The emphasis of this effort should be directed toward airframe fuselage floor, understructure, landing gear system, and seat design.

b. Phase II - Using the analytical techniques developed in TASK E, analyze the energy absorption design concepts developed during phase I of TASK F.

Funding:	FY-81	FY-82	FY-83	FY-84
	$300K	$300K	$300K	$300K
Milestone:	Completion	FY-84		

TASK G - TRANSPORT CATEGORY

Application of analysis techniques and energy absorption design concepts, TASKS E and F, respectively, to advanced materials; i.e., composite structures.

Funding:	FY-82	FY-83	FY-84	FY-85
	$300K	$300K	$300K	$300K
Milestone:	Completion	FY-85		

TASK H - GENERAL AVIATION

Together with NASA, DOD, and industry, identify, apply, and evaluate refined/advanced analytical techniques and energy absorption design concepts, utilizing advanced materials i.e., metal and composite structures, for their application to fixed-wing general aviation type aircraft.

Funding:	FY-82	FY-83	FY-84	FY-85
	$150K	$150K	$150K	$150K
Milestone:	Completion	FY-85		

TASK I - TRANSPORT CATEGORY

Perform full-scale crash tests to validate the techniques developed in TASKS D, E, F, G, and H. The successful completion of this task may require the construction of new test facilities. One such full-scale validation test will be conducted on a Boeing 720 aircraft in conjunction with the Antimisting Fuels Program.

Funding:	FY-82	FY-83	FY-84	FY-85
	$500K	$700K	$500K	$500K
Milestone:	Completion	FY-86		

2.3 SUPPORT.

The subprogram will require interagency participation among the FAA Technical Center, NASA, and DOD, as well as industry. Existing federal agencies' expertise and facilities will be utilized based upon their availability and test capabilities. It is anticipated, however, that the validation efforts of this program will require the redesign of existing facilities or construction of new facilities; i.e., the Technical Center catapult.

In addition, the Government will encourage and assist, through limited funding, fixed-wing and rotary-wing aircraft manufacturers to utilize the developed analytical models in evaluating the crashworthy design aspects of their product.

2.4 CRITICAL TECHNOLOGICAL ISSUES.

The critical technological issues involve the development of analytical methods for predicting the dynamic response of aircraft structure to the crash impact environment. The "lumped mass approach" developed in Program KRASH is not directly applicable to the more complex structure in transport category aircraft, except in extremely limited areas. It, therefore, appears that the larger and more complex structures will require further refinement of the finite element technique to incorporate nonlinear analysis, an area which is still in the infancy stages of development.

A secondary issue is the test facility. The successful completion of this program would entail full-scale tests. The Technical Center has in its possession a CE Mark I Model 3 catapult and track, which has the potential capability of fulfilling the subprograms test requirements. A feasibility study is being conducted to determine the operational scope of the Technical Center facility utilizing this catapult.

2.5 END PRODUCTS.

The end products of this subprogram plan are:

a. Identification of existing regulations and certification procedures requiring revision or new regulations.

b. Development of analytical methods to be used by the aircraft/rotorcraft manufacturers for crashworthiness design.

c. Improved method of collecting, storing, and utilizing crashworthiness data generated from investigations of aircraft accidents/incidents.

2.6 FUNDING AND SCHEDULING.

The funding and scheduling for the subject subprogram plan are indicated in figure 4.

3.0 CABIN SAFETY-SEAT/RESTRAINT SYSTEMS AND INTERIOR FURNISHINGS.

A review of past accident data has indicated that aircraft occupants have received serious or fatal injuries in accidents that have been termed survivable. A survivable accident has been defined as one in which the impact forces experienced by occupants are within the limits of human tolerance and the cabin environment remains reasonably intact.

To better understand aircraft crash impact dynamics, the FAA has undertaken the development of modeling techniques which will be capable of simulating the responses of various body components under crash impact conditions. Several models of the human body have been developed for crash survivability analysis of automobile accidents. However, seat representations used in these models were minimal in determining aircraft occupant survivability.

In aircraft accidents, the occupant in the seat experiences not only longitudinal forces but vertical forces and, to a lessor degree, lateral forces. In order to fulfill the needs of the agency and provide a validated analytical tool for crashworthy design, a program was undertaken to develop a user oriented computer program that predicts the dynamic response of a single seat, occupant and restraint system to a crash environment seat-occupant model light aircraft (SOMLA).

Figure 5 shows a typical occupant model. Body element weights are lumped at their mass center. Joints are represented with appropriate rotational resistance and typical rotational degrees of freedom. Body contours are represented by ellipsoids and cylinders. Any restraint system can be represented, e.g., lap belt or lap belt with single or double chest restraint and a crotch strap.

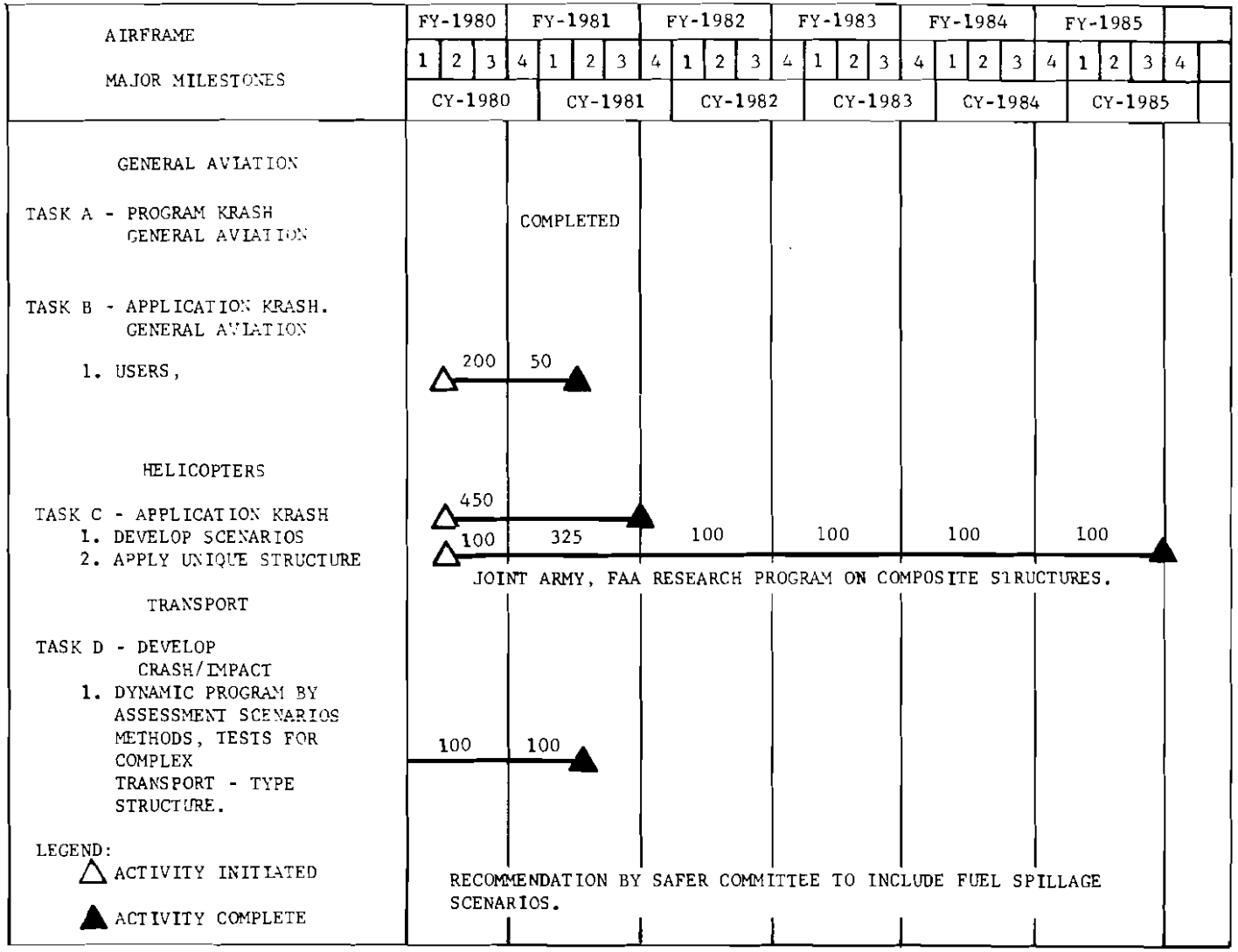

NOTE: ALL VALUES GIVEN IN THOUSANDS OF DOLLARS.

80-166-7

FIGURE 4. AIRFRAMES SUBPROGRAM FUNDING AND MAJOR MILESTONES (Sheet 1 of 3)

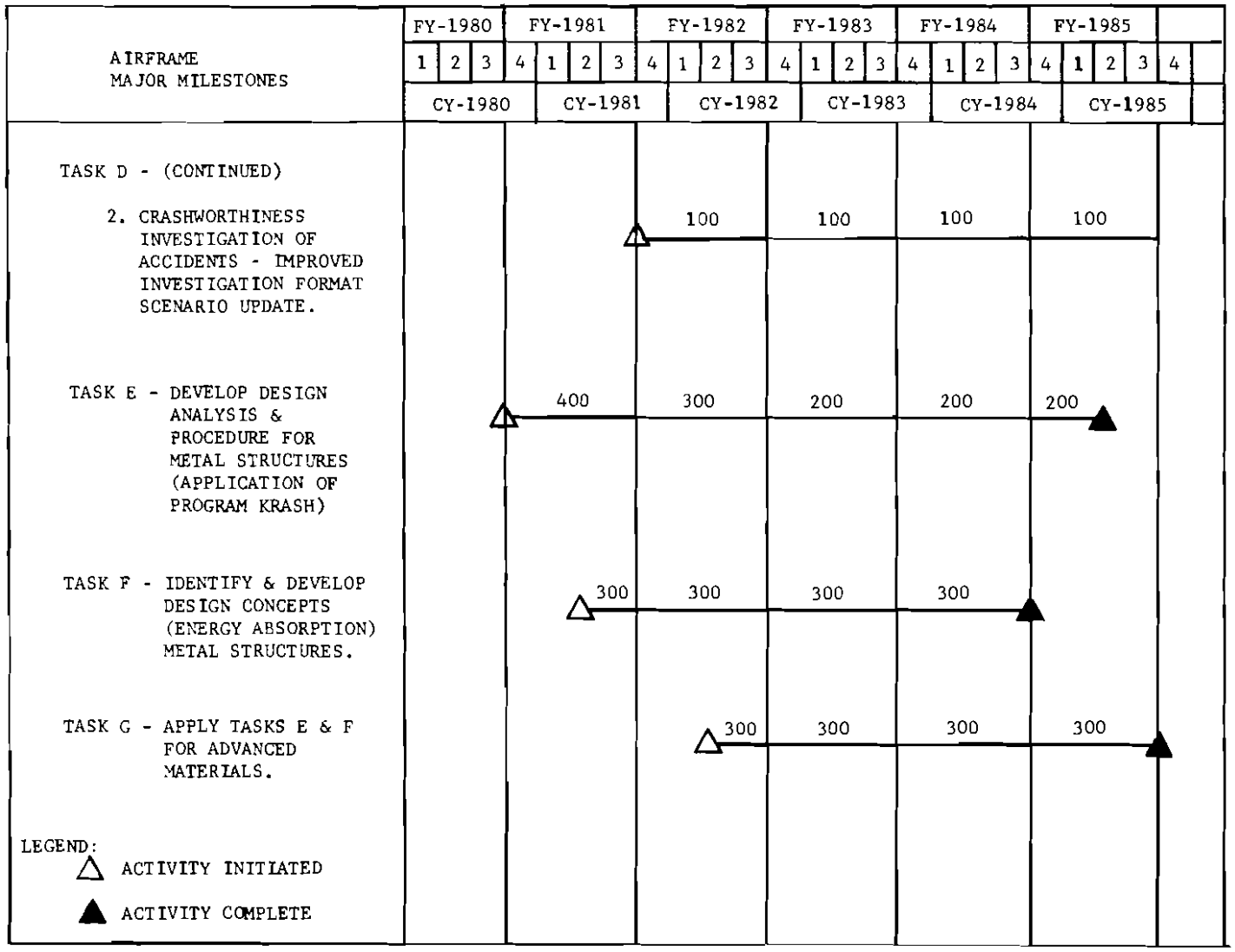

NOTE: ALL VALUES GIVEN IN THOUSANDS OF DOLLARS

80-166-7 (Continued)

FIGURE 4. AIRFRAMES SUBPROGRAM FUNDING AND MAJOR MILESTONES (Sheet 2 of 3)

AIRFRAME MAJOR MILESTONES	FY-1980	FY-1981	FY-1982	FY-1983	FY-1984	FY-1985
	1 2 3 4	1 2 3 4	1 2 3 4	1 2 3 4	1 2 3 4	1 2 3 4
	CY-1980	CY-1981	CY-1982	CY-1983	CY-1984	CY-1985
TASK H - IDENTIFY & EVALUATE ANALYTICAL PROCEDURES AND STRUCTURAL DESIGN CONCEPTS (ADVANCED MATERIALS) FOR GA AIRCRAFT.			150	150	150	150
TASK I - DESIGN, CONSTRUCT & CONDUCT FULL-SCALE VALIDATION TESTS.			500	700	500	500

LEGEND:
△ ACTIVITY INITIATED
▲ ACTIVITY COMPLETE

NOTE: ALL VALUES GIVEN IN THOUSANDS OF DOLLARS.

80-166-7 (Continued)

FIGURE 4. AIRFRAMES SUBPROGRAM FUNDING AND MAJOR MILESTONES (Sheet 3 of 3)

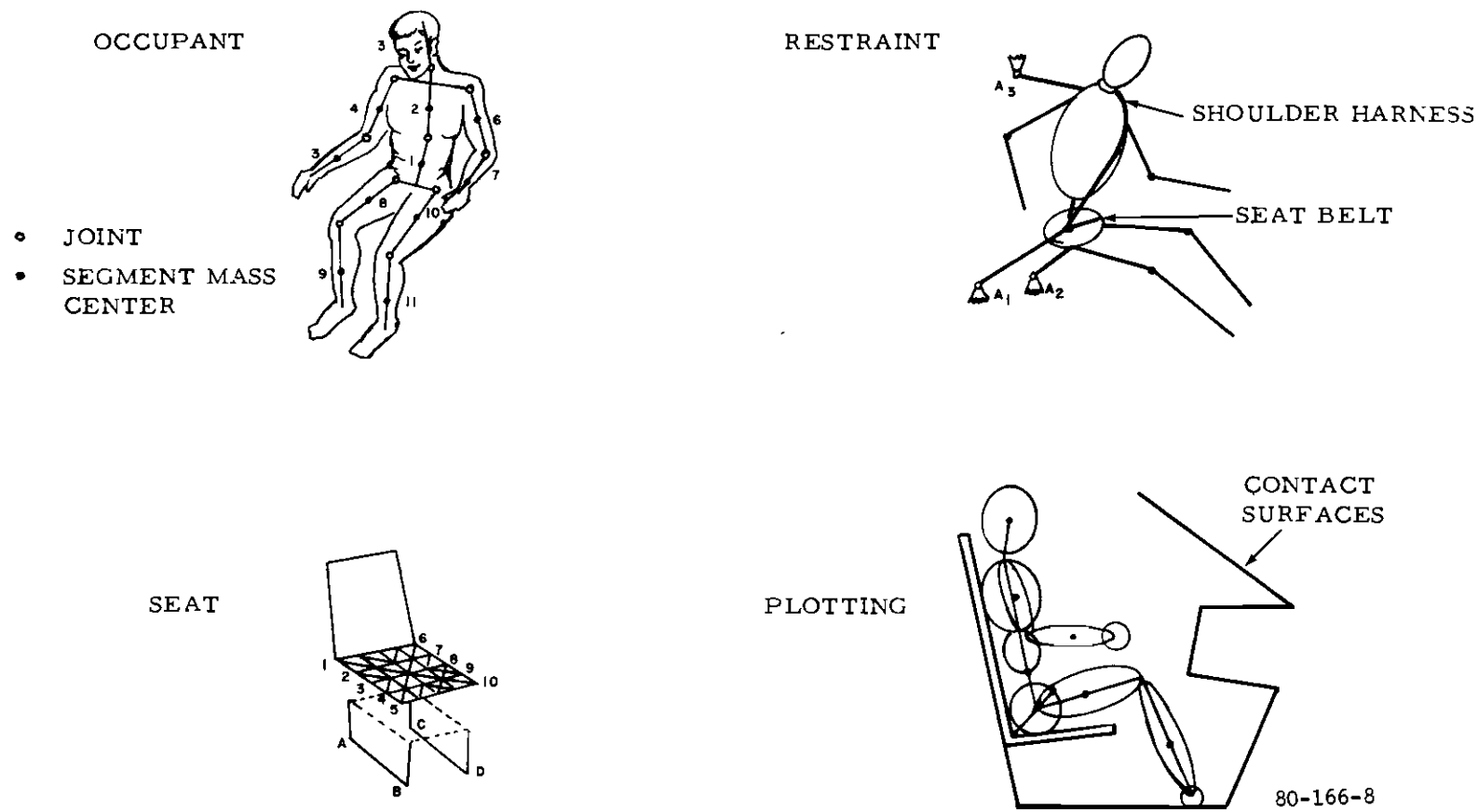

FIGURE 5. THREE DIMENSIONAL SEAT-OCCUPANT COMPUTER MODEL

Complimentary to SOMLA, a program will be developed to assess multiple seats/restraint systems for both transport category aircraft and rotorcraft. Also, an injury criteria based upon human tolerance limitations should be incorporated into the program.

In addition to seats/restraint systems, the cabin interior; e.g., galley, lavatories, panels, overhead racks, etc., will be evaluated for survivability in the crash environment.

3.1 OBJECTIVE.

To develop methods of improving the structural integrity of seat/restraint systems and cabin interior furnishings exposed to dynamic loads resulting from a crash environment.

a. Phase I - Short-Term Objectives - develop and validate SOMLA and integrate with DYCAST for a dynamic analysis of structures.

b. Phase II - Long-Term Objective - is threefold:

1. Determine human, tolerance limitations associated with crash impact environment.

2. Develop regulatory procedures and criteria based upon results of (1) above.

3. Identify interior cabin furnishing (seats, galleys, overhead bins, etc.) and their relationship to airframe structural features and evaluate how their interactions contribute to occupant injuries and/or fatalities.

3.2 TECHNICAL APPROACH.

The technical approach is comprised of four interrelated areas:

a. Development of an analytical method to evaluate the relationship between the occupant and seat/restraint system for single and multiple seat units as well as seat rows.

b. Integration of seat structure with basic airframe supporting structure.

c. Integration of developed human injury tolerance limits with the seat occupant model to predict seat/restraint failures and human injury criteria.

d. Assess and improve crash impact resistance of cabin interior furnishings to minimize occupant hazards.

3.2.1 MAJOR TASKS.

The major cabin safety subprogram elements are illustrated in figure 6.

3.2.1.1 Short-Term Tasks.

TASK A - DEVELOPMENT OF SOMLA:

a. Phase I - Develop and evaluate seat occupant model for light aircraft (SOMLA).

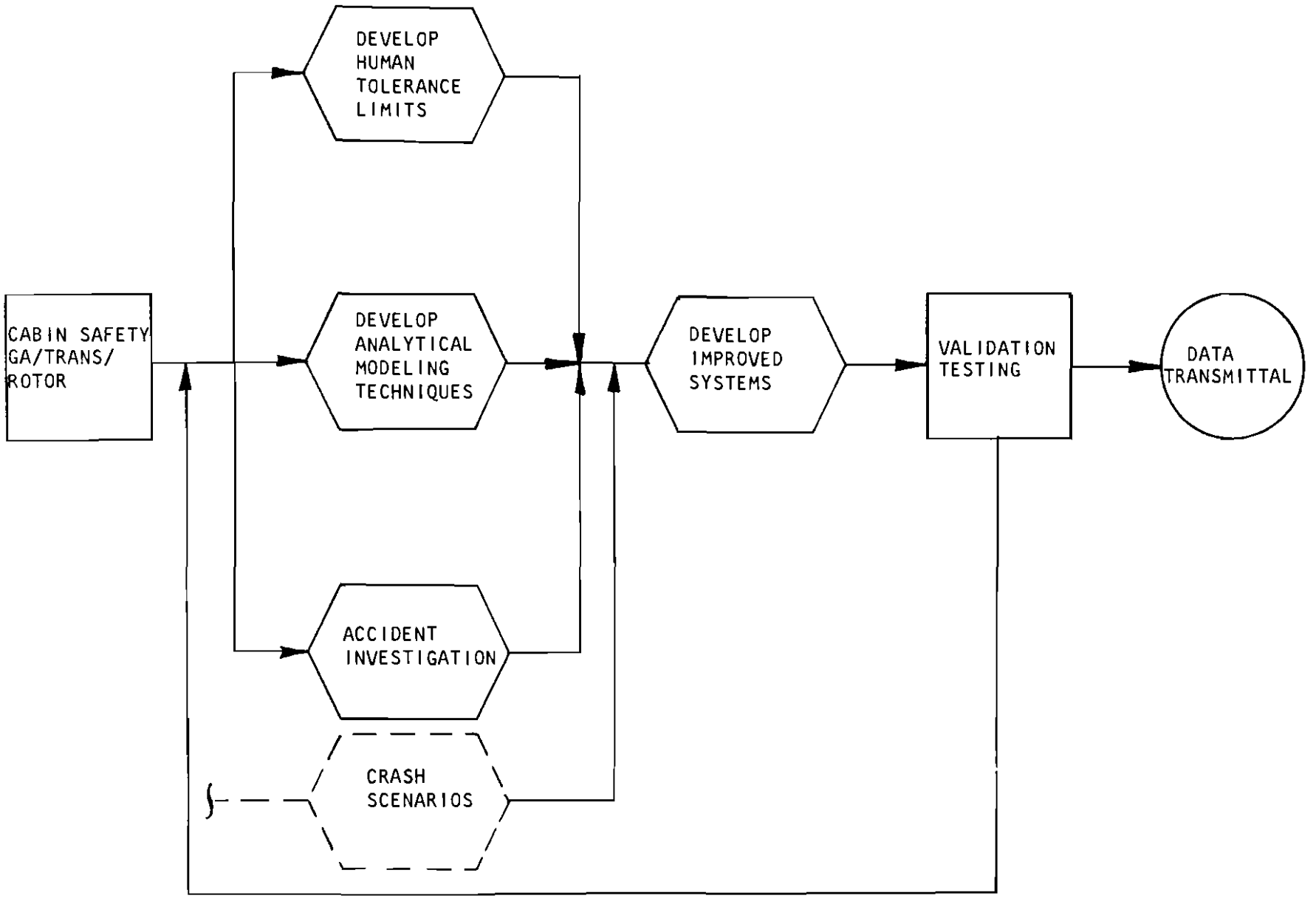

FIGURE 6. CABIN SAFETY SUBPROGRAM ELEMENTS

Funding:	FY-79
	$ 77K
Milestone:	Completion FY-80

b. Phase II - Expand SOMLA's capability to evaluate new seat designs and associated structural attachments.

Funding:	FY-80
	$ 20K
Milestone:	Completion FY-81

c. Phase III - Tests utilizing both theoretical seat designs and production seat configurations will be performed to assess validity of SOMLA's predictive capability.

Funding:	FY-81
	$ 80K
Milestone:	Completion FY-81

TASK B - TRANSPORT CATEGORY AIRPLANES: Integration of SOMLA and DYCAST.

a. Phase I - Integration of occupant model (SOMLA) with structural model (DYCAST). SOMLA will provide dynamic response of occupant, and DYCAST will provide dynamic response of seat and floor for any seat combination.

Funding:	FY-79
	$100K
Milestone:	Completion FY-81

b. Phase II - Full-scale verification tests and documentation of analytical method development in Phase I. This is a coordinated effort with NASA.

Funding:	FY-80
	$100K
Milestone:	Completion FY-81

c. Phase III - Utilizing the results obtained during Phase II, design, construct, and test new crashworthy occupant seat.

Funding:	FY-81	FY-82	FY-83	FY-84
	$100K	$100K	$100K	$200K
Milestone:	Completion FY-84			

TASK C - GENERAL AVIATION AND TRANSPORT SEAT TESTS: Expand validation tests to include several rows of multiple seats and accompanying floor structure.

Funding:	FY-81	FY-82	FY-83	FY-84	FY-85
	$200K	$200K	$200K	$400K	$200K
Milestone:	Completion FY-85				

TASK D - GENERAL AVIATION, TRANSPORT AND ROTORCRAFT.

a. Phase I - Review, collate, and evaluate accident data to develop a realistic crash scenario, identifying seat/restraint system failures which either resulted from or occurred in conjunction with airframe structural and cabin furnishings failures and contributed to occupant injuries and/or fatalities.

b. Phase II - Based on the data generated in phase I, existing and newly developed seats (single and multiple units), restraint systems, (inertia reels, latching devices, etc.), and cabin interior furnishings will be evaluated for delethalization characteristics.

Funding:	FY-80	FY-81	FY-82	FY-83	FY-84
	$100K	$100K	$100K	$ 50K	$ 50K
Milestone:	Completion FY-84				

TASK E - DEVELOP HUMAN TOLERANCE LIMITS: This task is part of a joint FAA/Tri-Services (Army, Navy, and Air Force) program which includes:

a. The development of test facilities, procedures, dummies, tolerable crash pulses, and other human parametric studies.

b. Studies on the use of cadavers and primates.

c. Development of appropriate human/dummy tolerance limits.

d. Subsequent to establishment of human injury and survival tolerance limits, interactive process between the seat/occupant/restraint model and the occupant must be used to assess injury evaluation.

This interactive process should result in an optimally designed seat for human tolerance limits for crash impact environment.

Funding:	FY-81	FY-82	FY-83	FY-84	FY-85
	$300K	$300K	$100K	$100K	$100K
Milestone:	Completion FY-85				

TASK F - CRITERIA DEVELOPMENT: Analyze test data generated in preceding tasks and develop design standards, test criteria, and procedures for crashworthy seat.

Funding:	FY-81	FY-82	FY-83	FY-84
	$100K	$100K	$100K	$ 50K
Milestone:	Completion FY-84			

3.3 SUPPORT.

This program will require the coordinated participation of the FAA Technical Center, FAA/CAMI, the DOD (Army, Navy, and Air Force), NASA, and industry.

Interagency participation has already been established and will continue at its present level. When efforts require the needs of industry analysis, testing, or validation, competitive contracts have been and will continue to be awarded. The

Technical Center's, NASA's, and CAMI's facilities will be utilized in the verification of the multiple seats with a portion of the airframe structure.

Progress of the program will be disseminated through the institution of periodic workshops.

3.4 CRITICAL TECHNOLOGICAL ISSUES.

One of the most difficult issues will be the definition, with reasonable accuracy, of the human tolerance limitations and their correlation with anthropomorphic dummies.A coordinated Government-wide determination of these limits is underway.

The interrelationship of the multiple seats/occupant model with the airframe floor structure will tax the capacities of present day computers unless an improved method is developed. The issue of optimizing the seat and seat/restraint design to be consistent with the human tolerance limitations for all scenarios in crash-impact survivable accidents will be another critical factor in the success of attaining the final objective. Another issue is the development of test facilities. Some validation efforts will require the redesign or construction of facilities capable of handling the test criteria.

3.5 END PRODUCTS.

The end products of this subprogram are:

a. Information which could provide the basis for improved certification standards and criteria.

b. Standardization of seat testing and data analysis procedures.

c. Development of analytical methods to be used by manufacturers in the design of crashworthy seats.

3.6 FUNDING AND SCHEDULING.

The funding and scheduling plan for this subprogram is presented in figure 7.

4.0 FUEL SYSTEM PROTECTION.

Studies of aircraft accident records show that a significant percentage of fatalities result from post-crash fires. From 1973 through 1976, the National Transportation Safety Board's (NTSB) yearly summary of general aviation accidents showed over 16 percent of all accidents resulted in fatalities, with 30 percent of these involving post-impact fire. It is apparent that, once ignition occurs in the presence of large quantities of spilled fuel, the survival chances of aircraft occupants are significantly reduced. The only feasible way to decrease the incidence of post-crash fires in fixed-wing and rotary-wing aircraft is with the reduction of fuel spillage and ignition sources. This philosophy has led to the design and development of crash resistant fuel system (CRFS) technology for both fixed-wing and rotary-wing application.

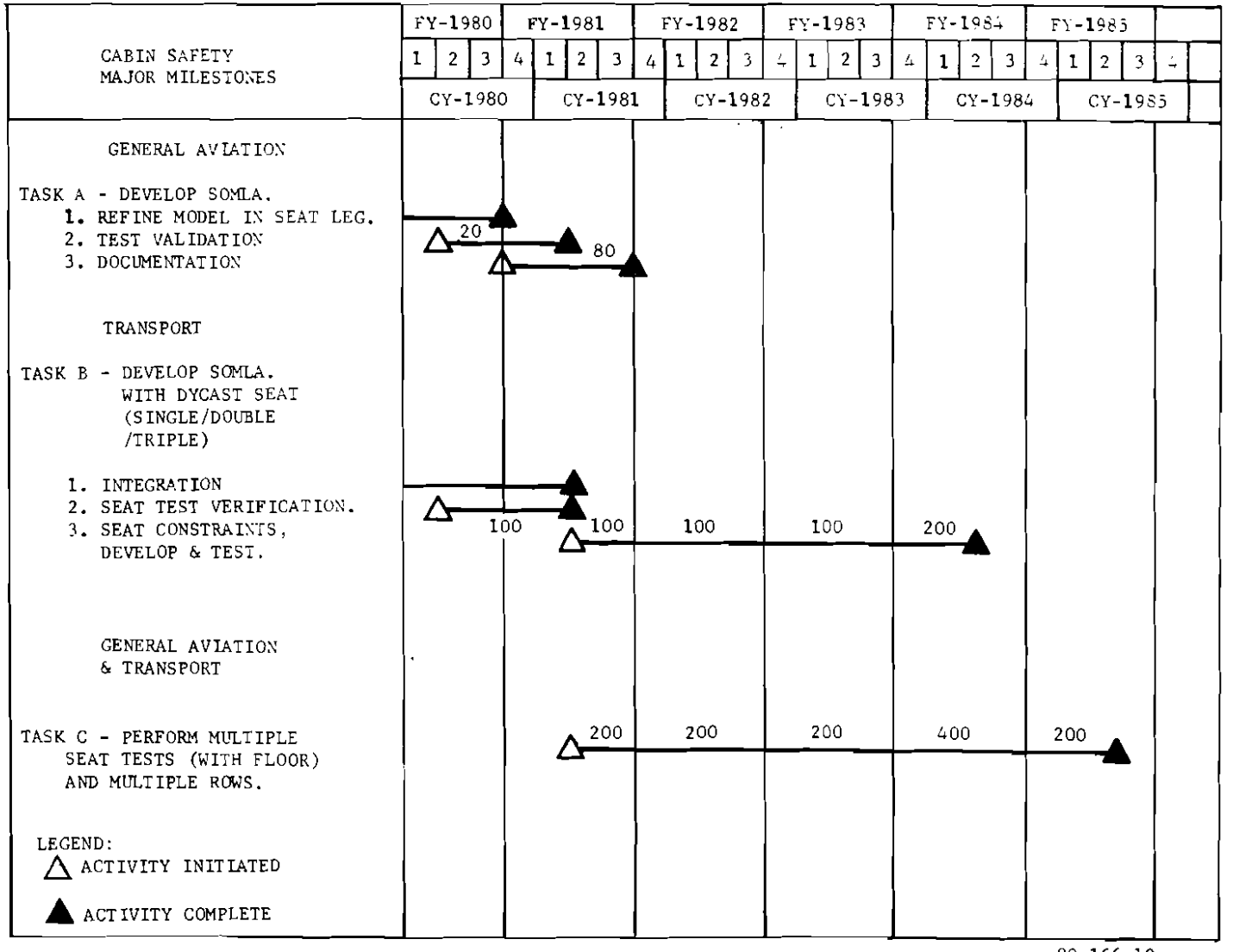

NOTE: ALL VALUES GIVEN IN THOUSANDS OF DOLLARS.

FIGURE 7. CABIN SAFETY FUNDING AND MAJOR MILESTONES (Sheet 1 of 2)

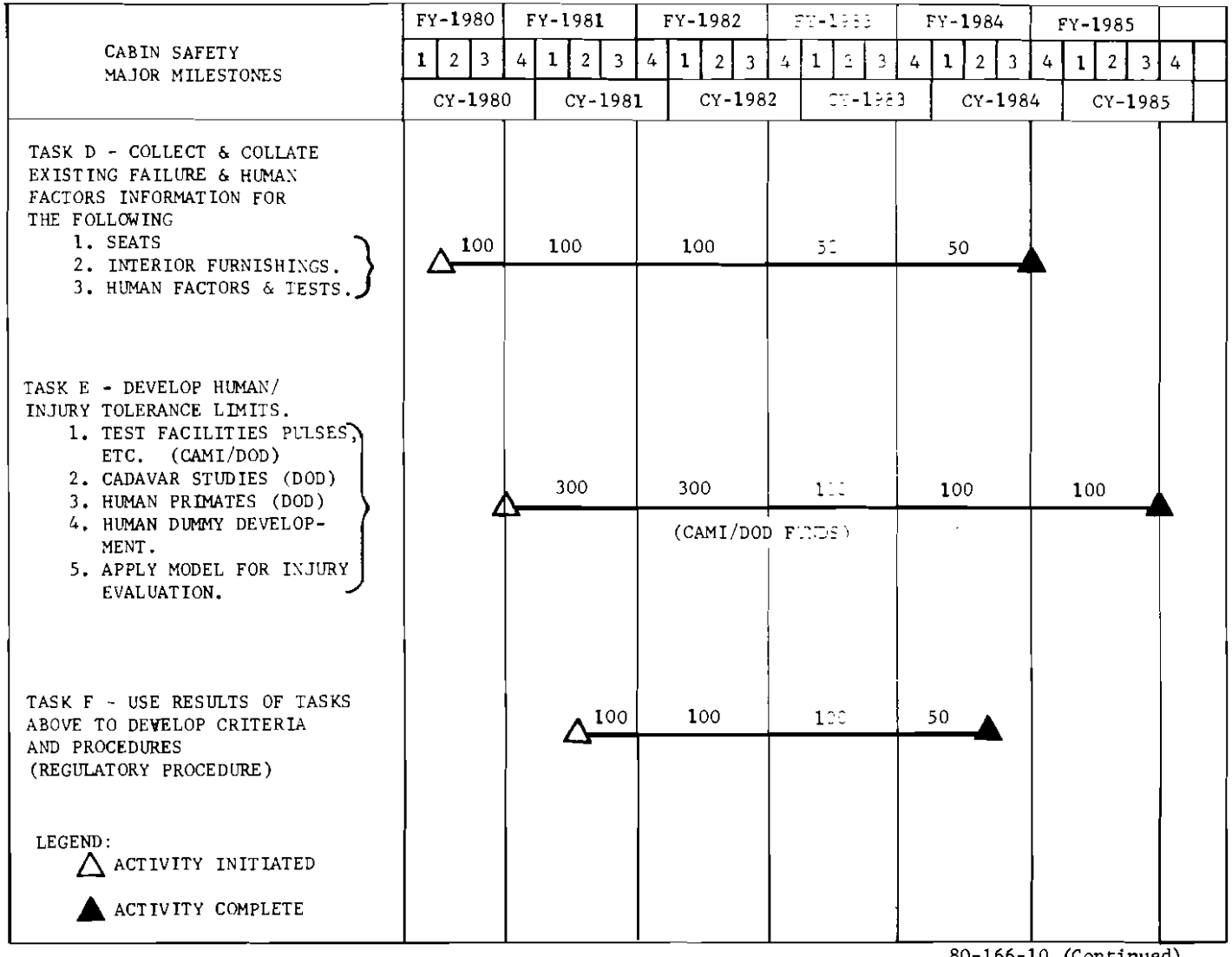

NOTE: ALL VALUES GIVEN IN THOUSANDS OF DOLLARS.

80-166-10 (Continued)

FIGURE 7. CABIN SAFETY FUNDING AND MAJOR MILESTONES (Sheet 2 of 2)

Early fuel system protection efforts were undertaken first by the Civil Aeronautical Administration (CAA) and then by the FAA to develop crash resistant tank materials and fast-acting self-sealing valves for fuel tank and line usage.

Early in 1968, the U.S. Army was concerned over the loss of personnel resulting from burn trauma and impact damage in what would otherwise have been survivable accidents. At that time, 3 million dollars in emerging R&D funds were made available for the development of a crashworhty fuel system (CWFS) for Army helicopters. The proposed technical approach for achieving an acceptable CWFS included the following:

a. To minimize fuel spillage by providing impact resistant fuel tanks.

b. To minimize the dispersion and flow of fuel by providing breakaway armored fuel lines routed through frangible plates in the airframe.

c. To isolate the fuel within the fuel tanks by means of a series of pressure sensitive fuel shutoff valves.

As a consequence of this R&D effort, various hardware items were developed for the overall system. In April 1970, the first UH-1H helicopters equipped with CWFS started to roll off the production line.

Though the Army does not now collate accident records, they do keep injury/ fatality records. To date, these data indicate that, in accidents involving those Army helicopters equipped with the CWFS, only five fire-related injuries and one possible fatality have occurred.

The FAA continued to explore CRFS technology for both transport category and general aviation aircraft application and, in 1978, conducted five full-scale crash tests utilzing typical light twin engine aircraft retrofitted with CRFS. The results of these tests successfully demonstrated the ability of lightweight, flexible, crash resistant fuel cells with self-sealing frangible fuel line couplings to retain fuel under crash impact loads (figures 8 through 13). As a result of these past R&D efforts, the FAA/AVS has identified the fuselage of both fixed- and rotary-wing aircraft as well as the wing center section fuel tanks in airplanes as locations where CRFS technology could be applied. The FAA/AVS recommended that appropriate R&D be undertaken to develop this technology.

This subprogram is directed toward:

a. Developing crash impact test criteria for evaluating the application of of U.S. Army CRFS technology to the civil helicopter fleet.

b. Developing CRFS technology for use on transport category airplanes.

c. Refining existing CRFS technology for utilization by general aviation airplanes.

4.1 OBJECTIVES.

The objectives of this effort is to develop the basic technology and methods for fuel system protection so that new design criteria can be considered for compliance to improve survivability in a crash.

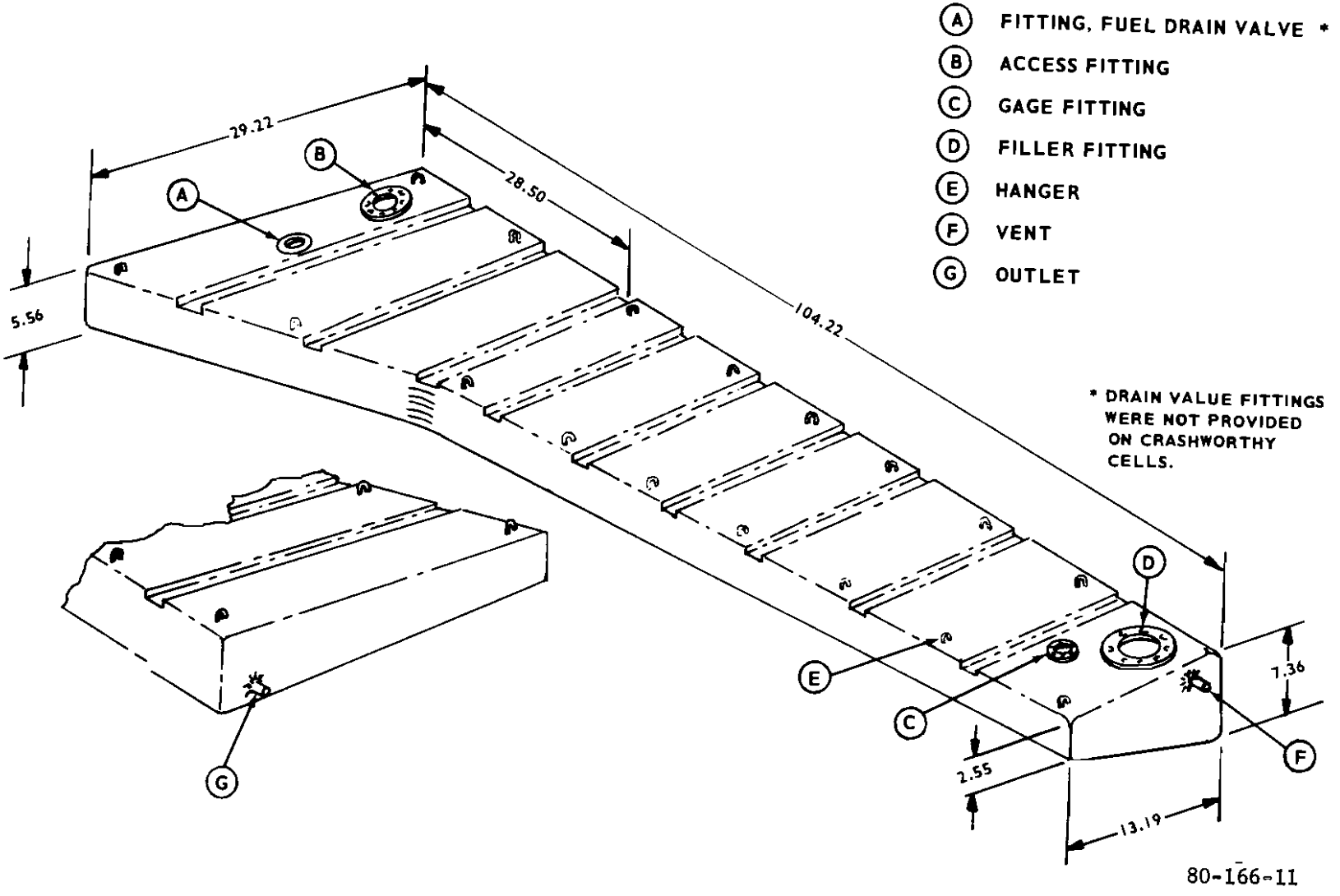

FIGURE 8. TYPICAL LIGHT TWIN-ENGINED AIRCRAFT LEFT MAIN FUEL CELL

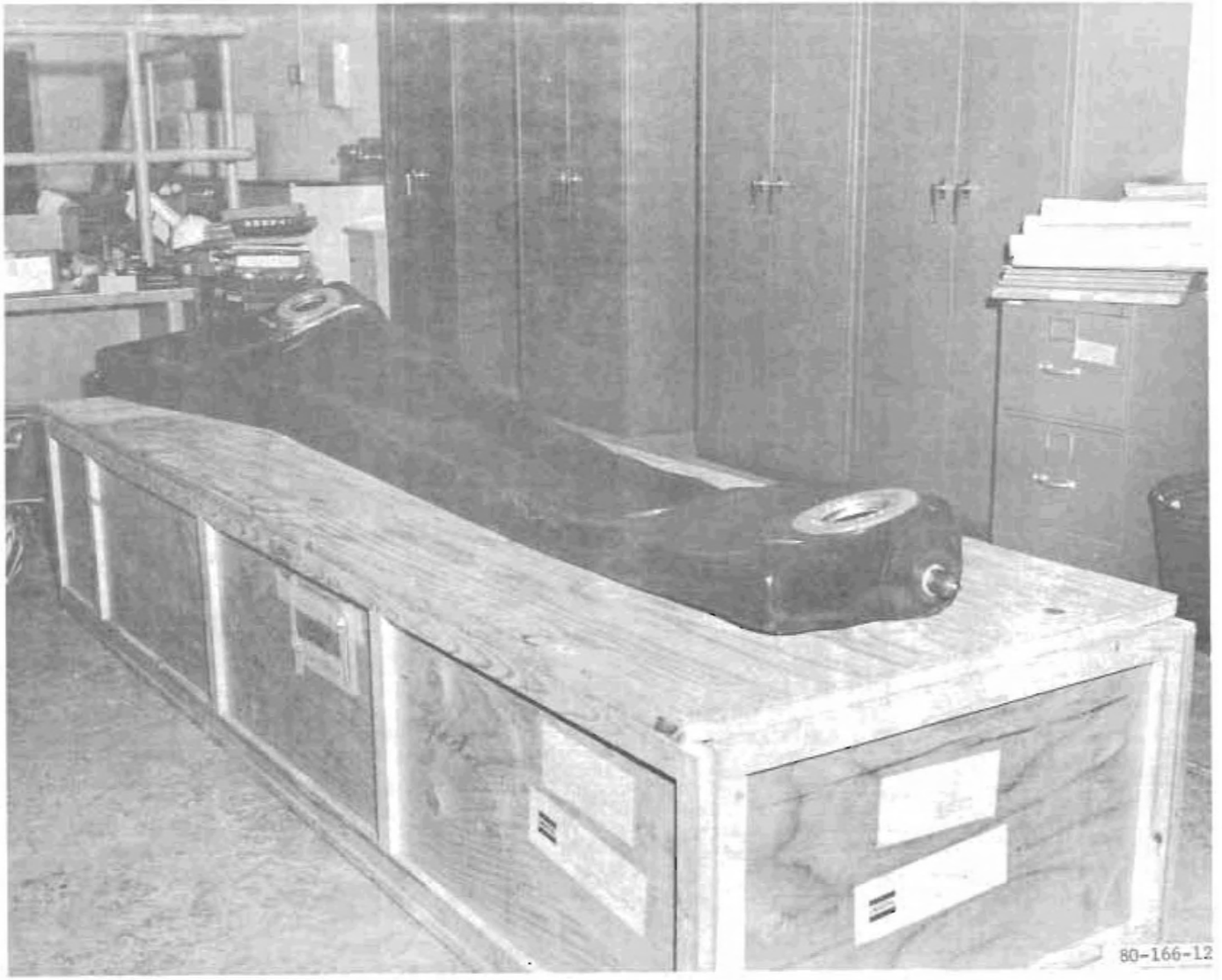

FIGURE 9. TWO-PLY CRASH-RESISTANT FUEL TANK

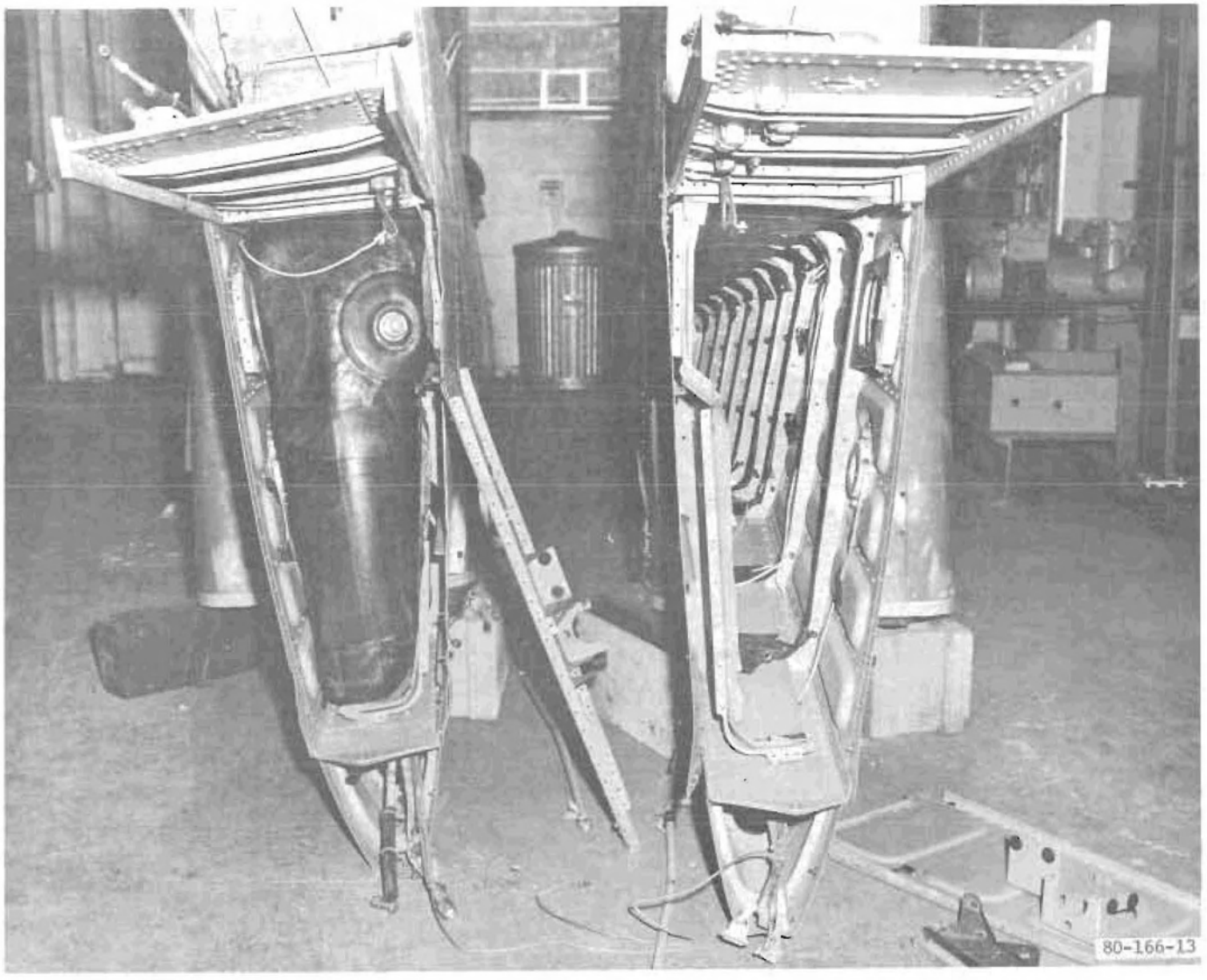

FIGURE 10. INSTALLATION OF TWO-PLY CRASH-RESISTANT FUEL CELL IN TYPICAL LIGHT TWIN-ENGINED AIRCRAFT WING

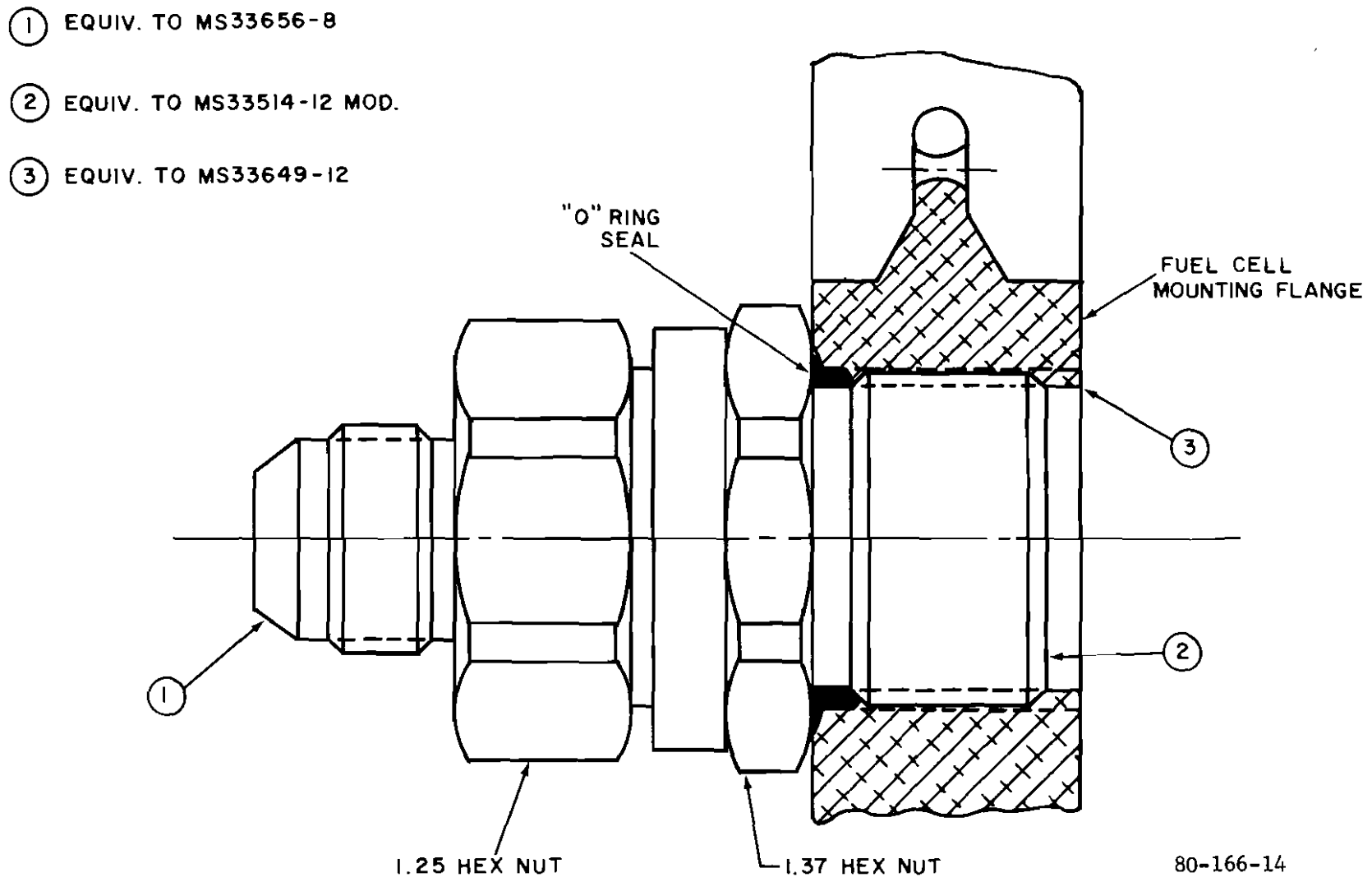

FIGURE 11. FRANGIBLE COUPLING MOUNTED TO FUEL CELL MOUNTING FLANGE

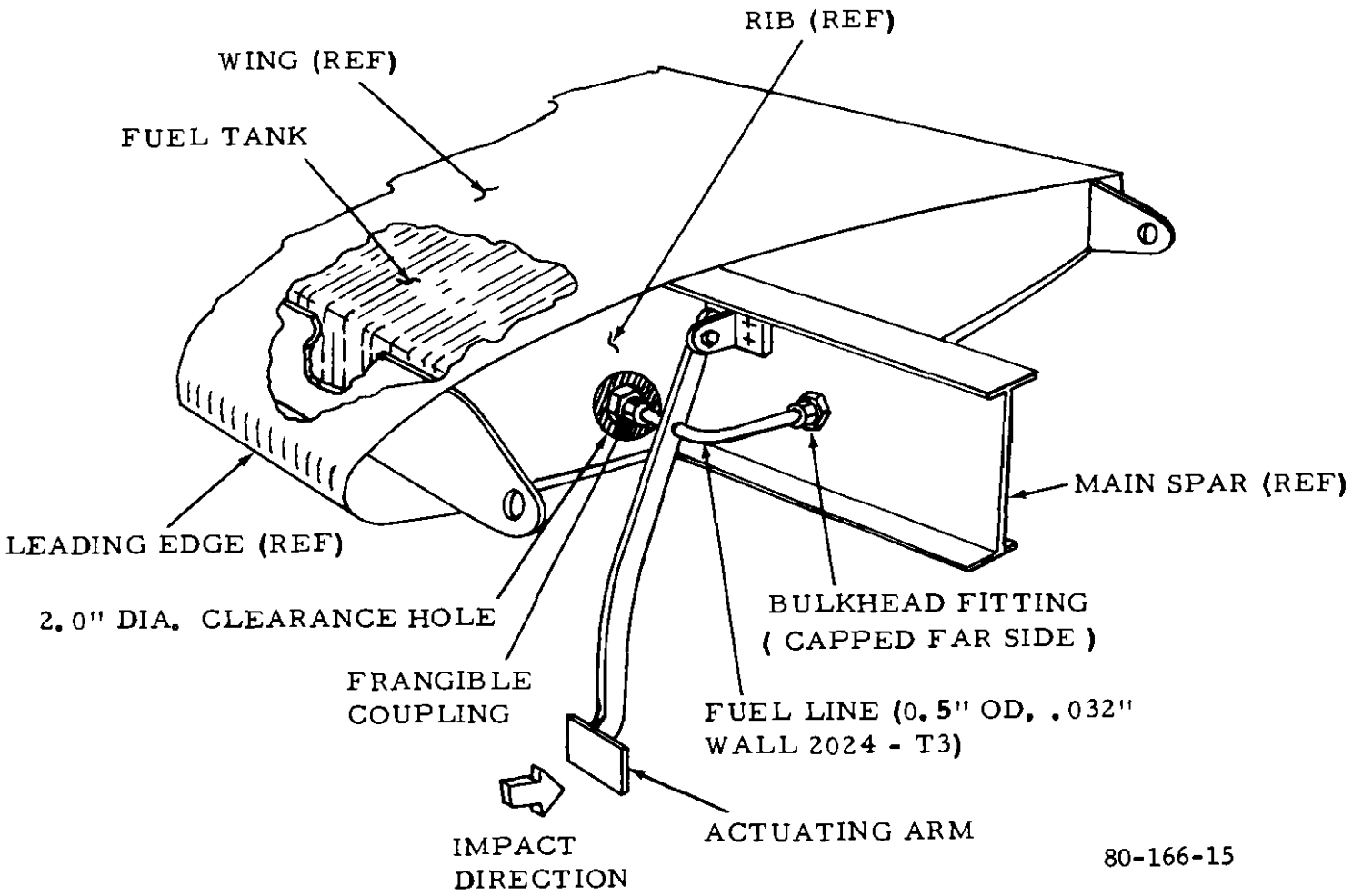

FIGURE 12. TYPICAL FRANGIBLE COUPLING INSTALLATION (WING ROOT)

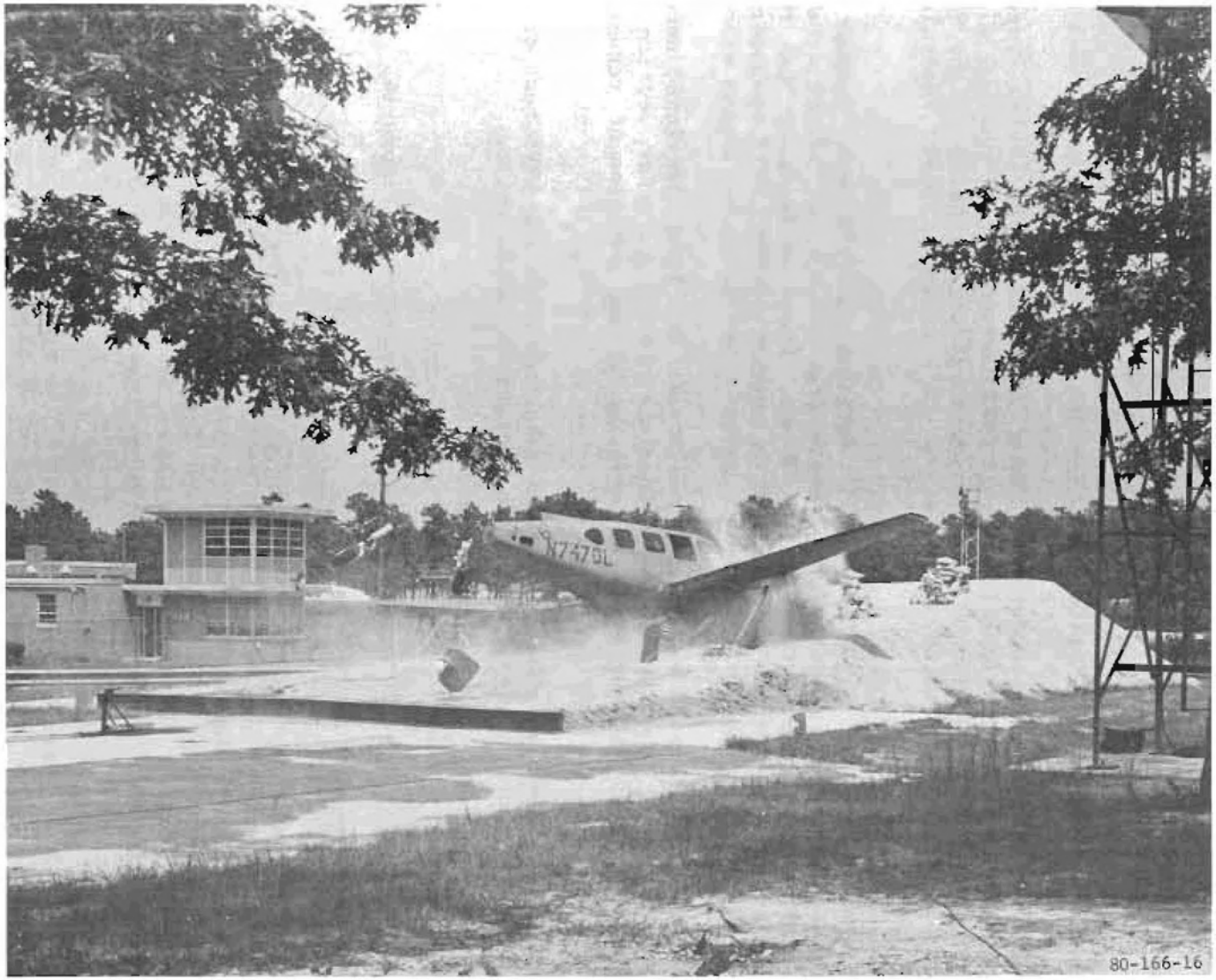

FIGURE 13. TYPICAL LIGHT TWIN-ENGINED AIRCRAFT IMPACT TEST
(NOTE: LEFT WING CONTAINS CRASH-RESISTANT FUEL CELL)

4.2 TECHNICAL APPROACH.

The U.S. Army CRFS technology will serve as the basis from which improvements will be made to introduce CRFS technology to the various types of civil aircraft. The general aviation CRFS technology has been demonstrated, and the remaining effort is directed toward completing the basis for which design standards can be considered.

In October 1979, the FAA/AVS conducted a Rotorcraft Regulatory Review Program to discuss new regulations for the application of CRFS technology. A point of discussion concerned the U.S. Army drop test requirements which are based on the 95 percentile of all crashes and which subjects the fuel cells to loads equivalent to a 65-foot vertical drop.

Based upon the results of this program, a decision will be made whether civil rotorcraft fuel tanks must withstand drop tests from the 65-foot height or whether the requirement can be reduced to a 50-foot drop. If it is mandated that the 65-foot drop is to be retained, no further R&D on rotorcraft CRFS will be undertaken. If not, then the proposed R&D is intended to provide the basis for design standards.

Crash scenarios for various size transport aircraft are being developed under the Airframe subprogram. This includes the fuselage and wing center section tanks. Drop height tests will be developed as well as impact environment requirements for tank tests.

The major tasks outlined are directed toward substantiating the CRFS test criteria, the basis for considering design criteria for regulatory application.

4.2.1 Major Tasks.

The Fuel System Protection subprogram elements are presented in figure 14.

4.2.1.1 Short-Term Tasks.

TASK A - GENERAL AVIATION: Develop CRFS design criteria for general aviation aircraft application. Design requirements will be based on an evaluation of historical accident data for: (1) general aviation aircraft, and (2) agricultural airplanes to determine the extent of fire injuries and fatalities in potentially survivable crash impact accidents. Include the assessment of the suitability of fuel tank liners, if utilized, to prevent normal operation leakage. This will be an in-house effort.

Funding:	FY-81	FY-82	FY-83
	$150K	$100K	$ 50K
Milestone	Completion	FY-83	

TASK B - HELICOPTERS

a. Phase I - Assess data generated from crash impact scenarios developed in the Airframe subprogram to determine the proper drop height from which CRFS fuel tanks should be evaluated.

b. Phase II - Develop laboratory tests which would realistically simulate full-scale crash impact tests.

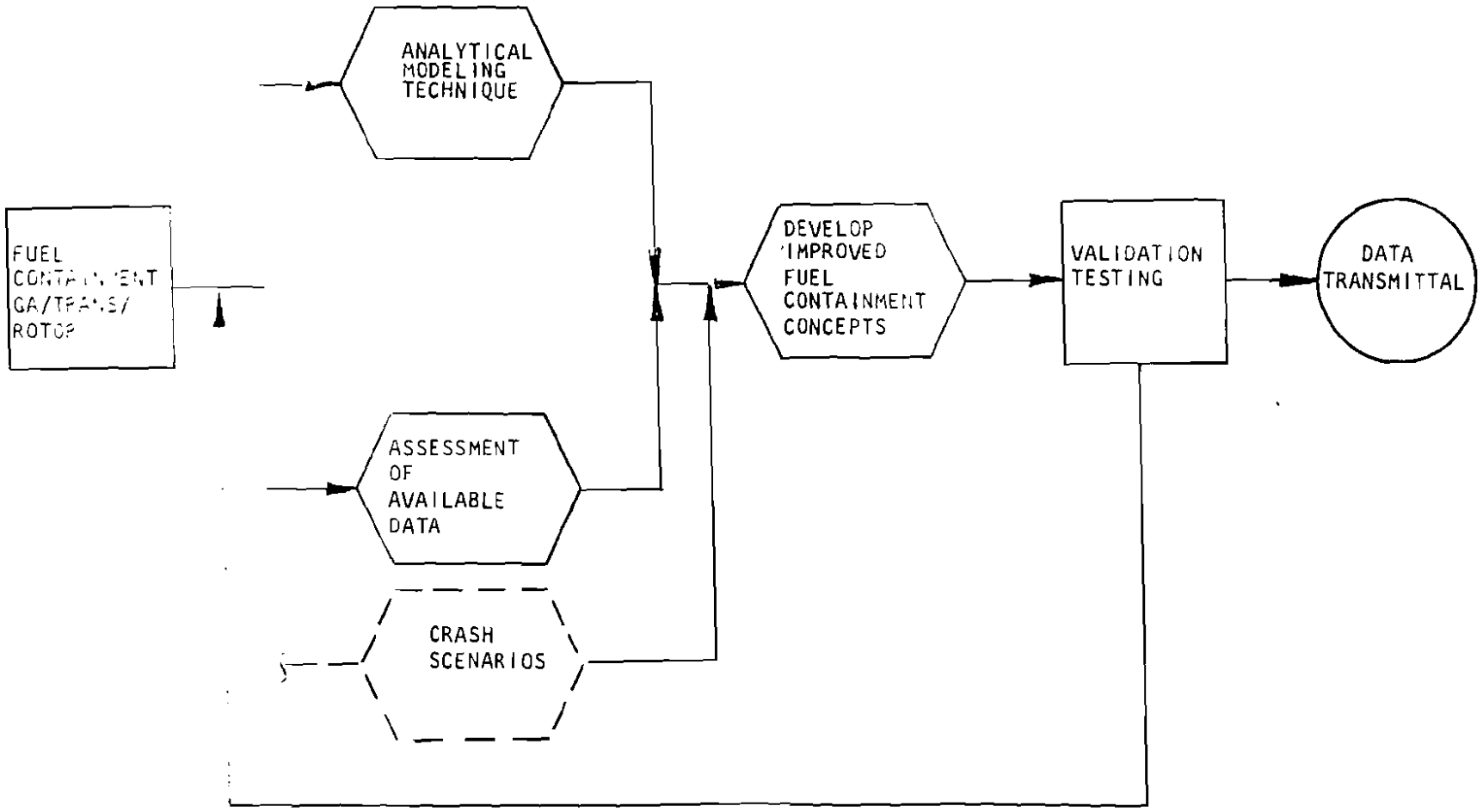

FIGURE 14. FUEL SYSTEM PROTECTION SUBPROGRAM ELEMENTS

Funding:	FY-80	FY-81
	$150K	$100K
Milestone:	Completion	FY-81

TASK C - HELICOPTERS: Conduct full-scale helicopter crash tests to evaluate the application of existing CRFS to the civil rotorcraft fleet. Apply data to Program KRASH and assess its suitability to be utilized in determining design criteria and standards for certification of rotary-wing aircraft.

Funding:	FY-81	FY-82	FY-83	FY-84	FY-85
	$150K	$100K	$100K	$100K	$ 50K
Milestone:	Completion	FY-85			

4.2.1.2 Long-Term Tasks.

TASK D: TRANSPORT CATEGORY AIRPLANES: Using the crash impact scenarios developed in the Airframe subprogram, dynamic tests will be conducted at the Technical Center of a typical transport aircraft fuselage and wing center section fuel tanks to evaluate the appropriate impact environment for fuel tank tests.

a. Phase I - Develop the necessary laboratory crash impact tests and/or test facility that could simulate full-scale transport category CRFS crash test environment.

b. Phase II - Design, construct, and test under laboratory conditions CRFS tank specimens.

c. Phase III - Based on the results of the laboratory tests, full-scale tests will be conducted on candidate CRFS, utilizing a fuselage/wing center section structure under appropriate crash conditions to evaluate their capabilities to eliminate massive fuel spills.

Funding:	FY-81	FY-82	FY-83	FY-84	FY-85
	$300K	$500K	$500K	$700K	$850K
Milestone:	Completion	FY-85			

TASK E: TRANSPORT CATEGORY AIRPLANES: Based on the data generated in TASK D, this effort will develop CRFS design criteria for the fuselage and wing fuel tanks of transport category airplanes.

Funding:	FY-85
	$200K
Milestons:	Completion FY-86

4.3 SUPPORT.

Participation in this effort will include the FAA Technical Center, U.S. Army, NASA, and industry. The Army and NASA will participate in evaluations of bidders' responses to contractual work statements. Contracts are expected to be awarded for the development of CRFS technology, development of laboratory test procedures, and laboratory verification tests. Potential large full-scale testing facilities include the Technical Center and NASA-Langley Research Center. The proposed IA's

already exist with NASA-Langley Research Center, the U.S. Army Applied Technology Laboratory, and the U.S. Army Safety Center. The FAA/AVS will be kept closely informed of task progress to ensure that their requirements are being met.

4.4 CRITICAL TECHNOLOGICAL ISSUES.

a. Availability of full-scale dynamic test facility.

b. Potential weight and volume restrictions associated with transport crashworthy fuel system.

c. Retrieval of information of impact scenarios being undertaken under the Airframe subprogram, TASK A.

d. Determination of the capability of the airframe understructure to absorb impact energy and resist penetration.

4.5 END PRODUCTS.

The end products of this subprogram are:

a. Data to provide the basis for improved certification standards and criteria.

b. Standardization of fuel system testing and data analysis procedures.

4.6 FUNDING AND SCHEDULING.

The funding and milestone scheduling for this subprogram is presented in figure 15.

5.0 EMERGENCY EVACUATION SYSTEMS.

Post-crash escape must be considered as part of a comprehensive crashworthiness design philosphy. It is not sufficient just to ensure that the cabin structure can withstand and absorb crash impact loads, or the seat/restraint system provide adequate protection to the occupant, or cabin environment be delethalized. In addition to these improvements, there must be an easily accessible, highly reliable means of egress available to the occupant by which he/she can self-evacuate during an emergency situation.

The NTSB, in a special study concerning the safety aspects of emergency evacuations from air carrier aircraft (NTSB-AAS-74-3) determined that a series of basic factors has influences, both of a positive and negative nature, on the success of an evacuation.

In this study, the NTSB divided these factors into three broad categories:

a. Environmental; i.e., weather, terrain, fire and smoke etc.
b. Machine; i.e., slides lighting systems, cummunications, etc.
c. Man; i.e., passenger preparedness, crew training, etc.

Also, the FAA accident studies have indicated that occupants were experiencing various types of injuries during emergency evacuations. Current airworthiness

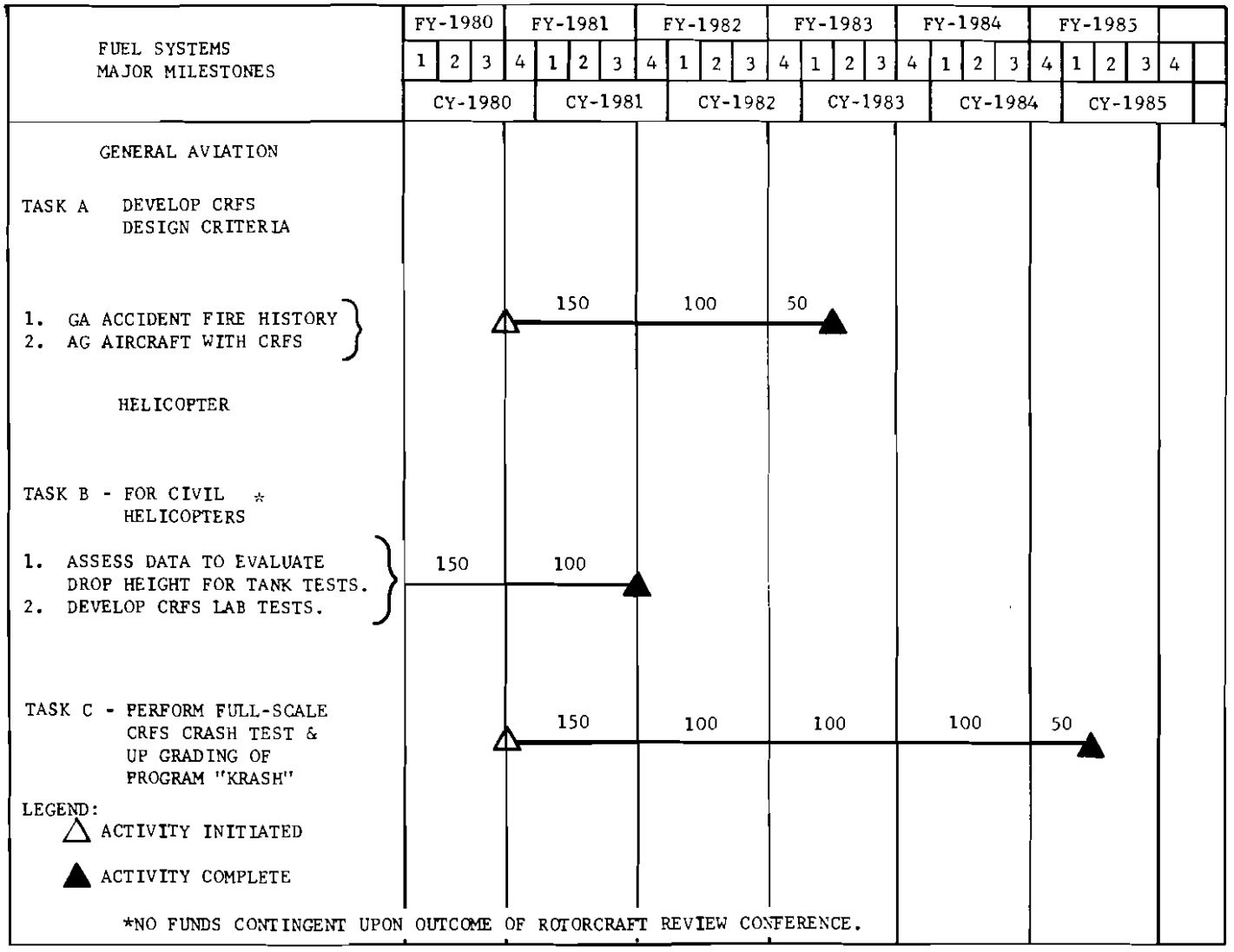

NOTE: ALL VALUES GIVEN IN THOUSANDS OF DOLLARS.

80-166-18

FIGURE 15. FUEL SYSTEMS FUNDING AND MAJOR MILESTONES (Sheet 1 of 2)

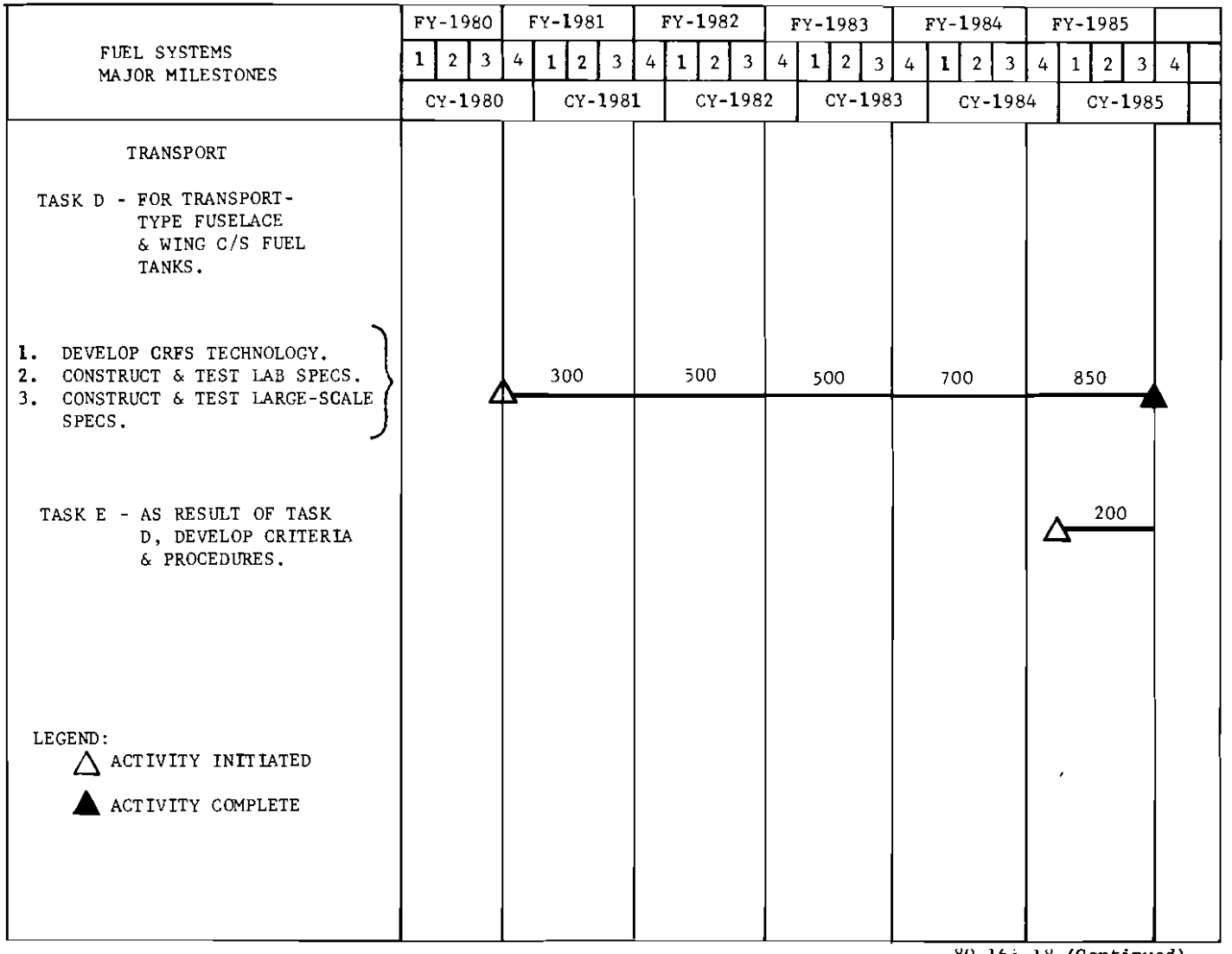

NOTE: ALL VALUES GIVEN IN THOUSANDS OF DOLLARS.

80-166-18 (Continued)

FIGURE 15. FUEL SYSTEMS FUNDING AND MAJOR MILESTONES (Sheet 2 of 2)

standards (14 CFR Part 25) require that it be demonstrated that the maximum seating capacity, including the number of crew members required by the operating rules for which certification is requested, can be evacuated from the aircraft to the ground within 90 seconds. The demonstration must be conducted either during the dark of the night or during daylight with the dark of the night simulated, utilizing only the emergency lighting system, the minimum number of required emergency exits, and the emergency evacuation equipment on one side of the fuselage with the aircraft in the normal ground attitude with landing gear extended. Additional provisions specify the conditions under which the demonstration must be conducted, including not more than fifty (50) percent of the emergency exits in the sides of the fuselage of an airplane that meet all of the requirements applicable to the required emergency exits for that airplane may be used for the demonstration. Also, only the airplane's emergency lighting system may provide illumination.

While the actual exit configurations vary from one type of aircraft to another, there is always some asymmetry in the distribution of exits and passenger seating which inevitably requires some passengers to travel farther than others to reach a potential exit. Actual accident experience indicates that the originally planned evacuation route may vary drastically because of interior blockage of the route, outside fuel spill fires, or structural deformation of the airframe and/or mechanical damage to the exit door. It is conceivable that evacuation situations could develop in which 50 percent of the exits would be serviceable at only one end of the aircraft, this would require some passengers to traverse the entire fuselage length to gain safety.

Therefore, new and advanced emergency evacuation concepts utilizing state-of-the-art technology must be developed, analyzed, and validated to ensure that occupants involved in impact survivable aircraft/rotorcraft accidents are afforded not only the most rapid means of egress, but also a greater degree of safety during the evacuation process.

5.1 OBJECTIVE.

To develop, analyze, and/or verify analytical methods, design concepts, and egress procedures based on current technology to ensure rapid and safe occupant self-evacuation from aircraft and rotorcraft invloved in impact survivable accidents.

5.2 TECHNICAL APPROACH.

Research existing analytical methods and test data from other Federal Agencies, the military services, and industry to determine what information is available to predict the time required for occupants to evacuate an aircraft/rotorcraft in an emergency situation.

Utilizing available background data and expertise, studies will be conducted:

a. To determine the relationship between the number, size, and location of exits to actual time of passenger egress.

b. To evaluate the capabilities of the exits to remain operational upon and after impact.

c. To investigate the effectiveness of emergency lighting, both internal and external, during evacuation.

d. To determine how emergency evacuation slides may be improved to compensate for unusual aircraft angles, adverse wind conditions, and low-load strengths.

Additional studies will evaluate the effects that certain features of passenger cabin layouts may have in hindering occupant evacuation. Examples of such obstacles include cabin dividers, lavatory partitions, clothes closets, and galley bulkheads. These fixtures may retard evacuation if they obscure exits from view or confuse occupants under conditions of limited visibility. Also, the effectiveness of physical exit cues will be investigated.

Based on these preceding studies, a series of technical efforts will be undertaken to analyze and validate suggested emergency evacuation improvements. Also, technical efforts will be initiated to develop new evacuation concepts that will be applicable to aircraft and/or rotorcraft.

The results of these technology assessments will be transformed into specific equipment procedures, criteria, or standard changes or innovations, and analyzed for operational, technical, and cost/benefit acceptability.

5.2.1 Major Tasks.

The evacuation systems subprogram elements are illustrated in figure 16.

TASK A - TRANSPORT CATEGORY AIRPLANES, EMERGENCY EXITS:

a. Phase I - Assess the feasibility of existing emergency exit configurations on small, medium, and large transport category aircraft to provide adequate occupant egress under adverse conditions prevalent in emergency situations. The evaluation will consider: (1) size of exits; (2) number of exits; (3) location of exits; (4) operation of exits; and (5) access to exits.

Funding:	FY-80	FY-81	FY-82
	$100K	$150K	50K
Milestone:	Completion	FY-82	

b. Phase II - Develop and validate new emergency exit concepts utilizing existing or newly developed analytical techniques and physical technologies.

Funding:	FY-83	FY-84	FY-85
	$100K	$300K	$300K
Milestone:	Completion	FY-85	

TASK B - TRANSPORT CATEGORY AIRPLANES: Refine, design, and/or develop improved operational reliability of evacuation slides during aircraft emergencies.

The following factors will be included under this effort:

a. Rapid inflation and deployment of the slide.
b. Angle of slide deployment versus aircraft attitude.
c. Attachment and load capabilities (strength).
d. Injuries associated with slide usage.

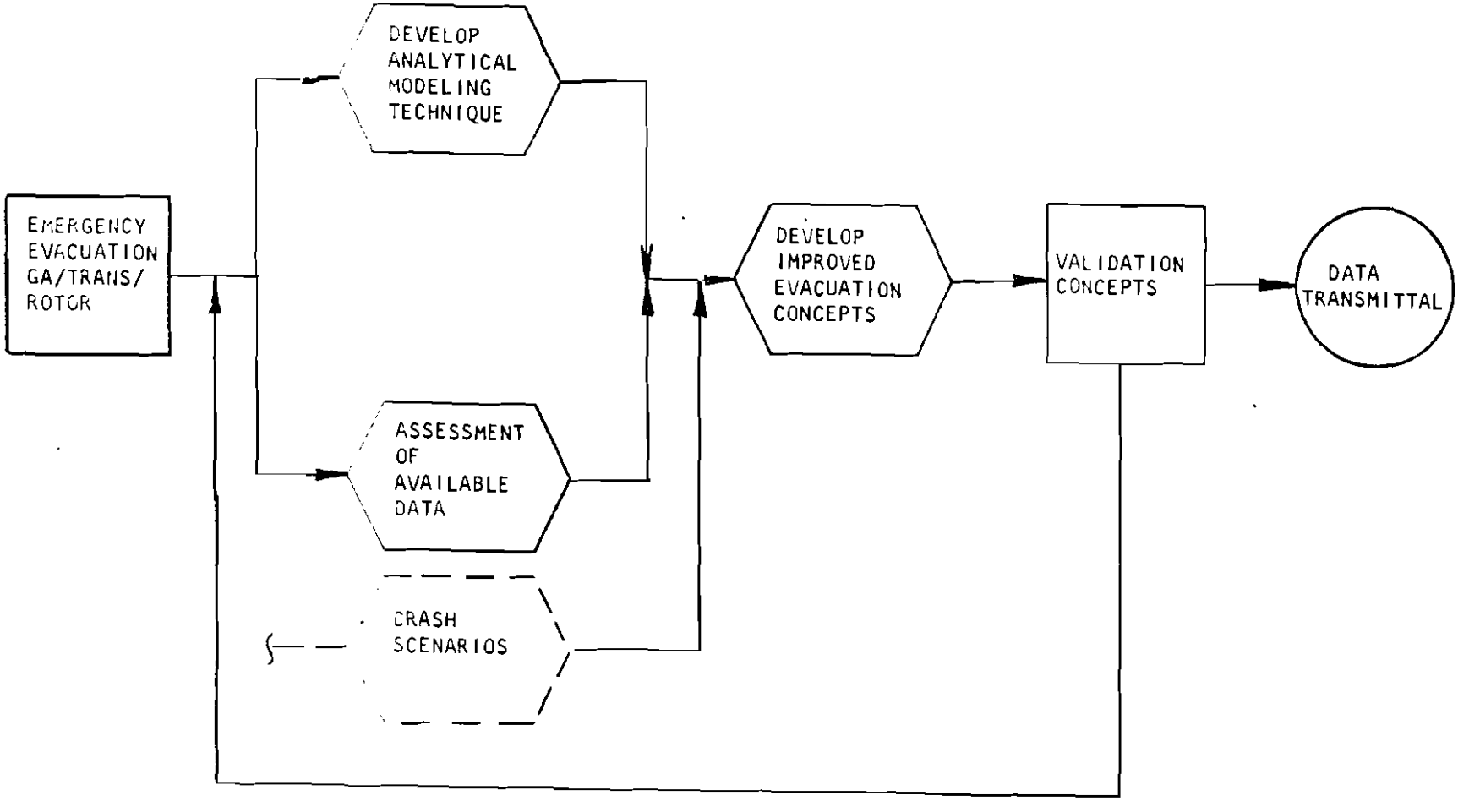

FIGURE 16. EMERGENCY EVACUATION SYSTEMS SUBPROGRAM ELEMENTS

Funding:	FY-82	FY-83	FY-84
	$200K	$100K	$100K
Milestone:	Completion	FY-84	

TASK C - TRANSPORT CATEGORY ROTORCRAFT, EMERGENCY EXITS: Conduct a similar effort as that outlined in TASK A, but for rotorcraft application. In addition, this effort will assess the feasibility of incorporating into the civilian fleet applicable U.S. Army crashworthiness exit data.

a. Phase I - Accident history of existing emergency exit configurations on rotary-wing aircraft.

Funding:	FY-81	FY-82	FY-83
	$ 50K	$150K	$ 50K
Milestone:	Completion	FY-84	

b. Phase II - Based on the results of Phase I new emergency exit concepts will be developed and validated.

Funding:	FY-82	FY-83	FY-84	FY-85
	$ 50K	$300K	$400K	$600K
Milestone:	Completion	FY-86		

TASK D - EMERGENCY LIGHTING, AIRPLANES AND ROTORCRAFT: Refine utilizing existing technology or design, develop, and validate new technology to improve the crashworthiness of internal and external illumination required in emergency situations. This effort will evaluate the crashworthiness of emergency lighting in terms of its: (1) power source, actuation system, and duration; (2) ability to provide internal passenger orientation under adverse conditions, such as smoke, etc.; and (3) ability to provide exterior illumination after post-crash impact.

Funding:	FY-82	FY-83	FY-84	FY-85
	$ 50K	$ 50K	$ 50K	$50K
Milestone:	Completion	FY-85		

5.3 SUPPORT.

This subprogram will involve the participation of the FAA Technical Center, FAA/CAMI, DOD, NASA, and industry. Existing expertise and facilities will be utilized as required; however, it is anticipated that some validation phases of this effort will necessitate the fabrication of new test bed configurations.

5.4 CRITICAL TECHNOLOGICAL ISSUES.

The critical technological issues involve the formulation of analytical methods to predict emergency evacuation egress times based on aircraft passenger density and the development of studies to determine how the factors (environmental, machine, and man) involved in post-crash egress influence passenger movement. Current testing facilities must be updated to simulate modern cabin internal and exterior configurations and innovations stimulated; i. e., slides, lighting, etc.

5.5 END PRODUCTS.

The end products of this subprogram effort are:

a. Data packages for consideration as the basis for regulations, standards, criteria, etc.

b. Development and validation of analytical methods to assist in predicting the emergency egress capabilities of aircraft/rotorcraft.

5.6 FUNDING AND SCHEDULING.

The funding and scheduling for this subprogram are indicated in figure 17.

6.0 CRASHWORTHINESS BRANCH PROGRAM MANAGEMENT.

The Crashworthiness Branch (ACT-330) has been established within the Aircraft Safety Development Division (ACT-300) at the Technical Center to perform the Division's mission pertinent to crash impact dynamics of airframes and cabin structures, seat and interior furnishings, and fuel containment. ACT-300 has been delegated by the Director (ACT-1) as the principal element in the Associate Administrator for Engineering and Development (AED) complex to plan, develop, manage, and perform R&D, test, evaluation, and demonstration efforts in the area of aircraft development, and improving safety and utility of civil aircraft flight operations. This Division is delegated authority as the primary agent within the AED complex for all R&D efforts in its mission. As such, ACT-300 develops program requirements for all projects within its assigned mission and is the primary office responsible for working with the operational services in translating requirements into R&D projects.

6.1 FUNCTIONS.

A partial listing of the functions of the Crashworthiness Branch is as follows:

a. Plans, develops, manages, and evaluates research, engineering, and develops crashworthiness program efforts in support of Division objective.

b. Provides technical direction, consultation, and assistance to other agency elements; other Government agencies; contractors involved in research, design, development, and testing; and aviation user organizations concerned with aircraft crashworthiness.

c. Identifies and initiates action for advancing the state-of-the-art in the crashworthiness program area.

d. Manages and directs the design, development, testing, and validation of programs, studies, and related elements from conception through prototype development and issuance of certification criteria. Maintains liaison and information exchange with agency, military, and aviation community elements as to progress and state-of-the-art crashworthiness development.

e. States requirements, participates in planning, and coordinates in specification of measurement and data collection systems or facilities, test bed facilities, and equipment essential to the performance of test and evaluation within the crashworthiness area. Performs functional design of special and unique testing facilities

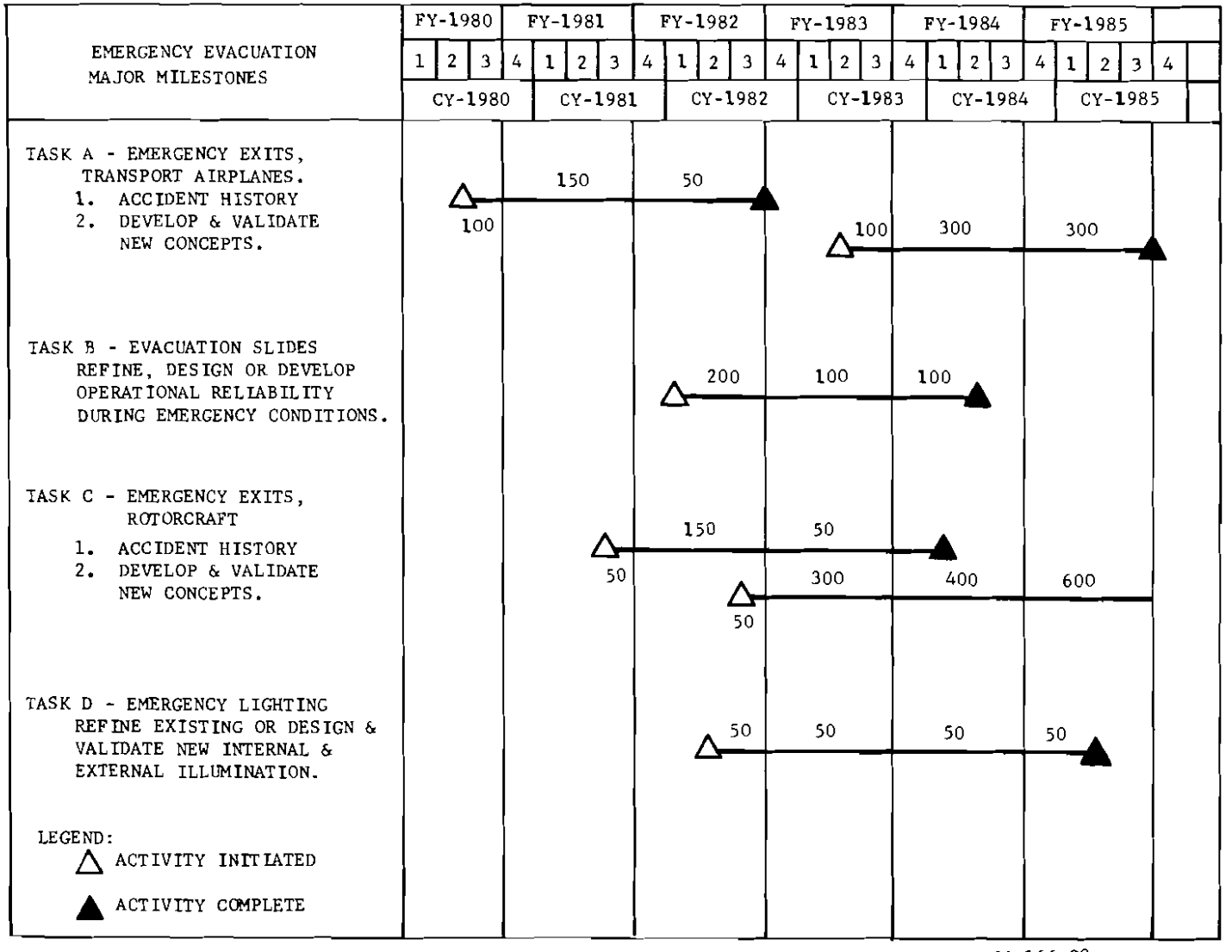

NOTE: ALL VALUES GIVEN IN THOUSANDS OF DOLLARS.

80-166-20

FIGURE 17. EMERGENCY EVACUATION FUNDING AND MAJOR MILESTONES

required for the conduct of testing, evaluation, experimental, and development programs. Manages, operates, maintains, and modifies existing unique test facilities.

f. Develops recommendations for future R&D programs deemed appropriate for enhancing aircraft safety for improved crashworthiness design. On a periodic basis, reviews program results within the context of regulation changes and makes recommendations to the Director through appropriate channels.

7.0 FUTURE PROGRAM PRODUCTS (PARTIAL LISTING).

a. Application and evaluation of Program KRASH by general aviation manufacturers.

b. Development of crash impact scenarios for rotorcraft.

c. Application of U.S. Army crashworthiness technology to the civilian fleet - helicopters MIL-STD-1290, Design Guide 79-22.

d. Adaptation of Program KRASH to rotorcraft.

e. Validation of transport aircraft crashworthiness methodology.

f. Development and validation of seat/occupant/model light aircraft.

g. Development of energy dissipating transport understructure, floor, seats.

h. New rotorcraft crashworthy design concepts.

i. Improved emergency evacuation occupant egress.

j. Development of program KRASH expertise.

k. Justification for new catapult.

l. Evaluation of advanced materials.

m. Landing Gear Systems.