EM 78/10

REPORT NO. FAA-EM-78-10

SYSTEMS INTEGRATION ANALYSIS FOR FUTURE TOWER CAB CONFIGURATIONS/SYSTEMS

FAA WJH Technical Center
00092461

U.S. DEPARTMENT OF TRANSPORTATION
RESEARCH AND SPECIAL PROGRAMS ADMINISTRATION
Transportation Systems Center
Cambridge MA 02142

TECHNICAL CENTER LIBRARY
ATLANTIC CITY, N.J. 08405

JUNE 1978

INTERIM REPORT

DOCUMENT IS AVAILABLE TO THE U.S. PUBLIC
THROUGH THE NATIONAL TECHNICAL
INFORMATION SERVICE, SPRINGFIELD,
VIRGINIA 22161

Prepared for

U.S. DEPARTMENT OF TRANSPORTATION
FEDERAL AVIATION ADMINISTRATION
Office of Systems Engineering Management
Washington DC 20590

NOTICE

This document is disseminated under the sponsorship of the Department of Transportation in the interest of information exchange. The United States Government assumes no liability for its contents or use thereof.

NOTICE

The United States Government does not endorse products or manufacturers. Trade or manufacturers' names appear herein solely because they are considered essential to the object of this report.

Technical Report Documentation Page

1. Report No.	2. Government Accession No.	3. Recipient's Catalog No.
FAA-EM-78-10		

4. Title and Subtitle	5. Report Date
SYSTEMS INTEGRATION ANALYSIS FOR FUTURE TOWER CAB CONFIGURATIONS/SYSTEMS	June 1978
	6. Performing Organization Code
7. Author(s) V.J. Hobbs, D.F. Clapp, P. Rempfer, L.E. Stevenson, D. Devoe, J. Bellantoni, J. Kuhn, J.R. Coonan	8. Performing Organization Report No. DOT-TSC-FAA-78-6
9. Performing Organization Name and Address U.S. Department of Transportation Research and Special Programs Administration Transportation Systems Center Cambridge MA 02142	10. Work Unit No. (TRAIS) FA8441/R8119
	11. Contract or Grant No.
12. Sponsoring Agency Name and Address U.S. Department of Transportation Federal Aviation Administration Office of Systems Engineering Management Washington DC 20591	13. Type of Report and Period Covered Interim Report July-October 1977
	14. Sponsoring Agency Code

15. Supplementary Notes

16. Abstract

This report presents the results of the analysis of various aspects of the integration of future ATC systems into the tower cab. The impact on the tower cab environment is analyzed from several points of view: how the systems information and displays might be used to approach idealized controller station configurations; how the cab equipment and displays resulting from these systems might be fitted into existing controller station configurations; how those systems--some not yet fully defined--might evolve and interact with the present and future systems; how the data-processing functions and equipment might be integrated; and how, or if, economies might be achieved through common siting of certain system sensors.

The report is a continuation of Report Nos. FAA-EM-77-10/(DOT-TSC-FAA-77-19) entitled "Characterization of Current Tower Cab Environments," dated November 1977 (210 pages), and Report Nos. FAA-EM-77-16/(DOT-TSC-FAA-78-2) entitled "Tower-Related Major System Development Programs," dated March 1978 (288 pages).

17. Key Words	18. Distribution Statement
Tower Cab, Major Systems Development Programs, TIPS, TAGS, ASDE-3, Wind Shear, Wake Vortex, Idealized Controller Stations	DOCUMENT IS AVAILABLE TO THE U.S. PUBLIC THROUGH THE NATIONAL TECHNICAL INFORMATION SERVICE, SPRINGFIELD, VIRGINIA 22161

19. Security Classif. (of this report)	20. Security Classif. (of this page)	21. No. of Pages	22. Price
Unclassified	Unclassified	314	

Form DOT F 1700.7 (8-72) Reproduction of completed page authorized

PREFACE

This report was prepared under Project Plan Agreement FA-744, "Major Systems Development Programs Integration Analysis," sponsored by the Federal Aviation Administration, Office of Systems Engineering Management. It documents the third phase of a three-phase effort to study the impact on the tower cab environment of introducing Major System Development Program (MSDP) elements into the CONUS ATC system.

The authors wish to acknowledge the cooperation of the many FAA personnel who contributed time and energy reviewing the material presented herein.

FOREWORD

This is the third and last report in a series of three reports on the subject of tower-related systems integration analysis. It constitutes sections twelve (12) through eighteen (18) of the complete report and documents the systems integration analysis for which the first two interim reports formed the foundation.

The first interim report, "Characterization of Current Tower Cab Environments." contains sections 1 through 5 of the overall report and discusses the tower cab as it is today, covering such topics as allocation of functions and equipment to tower positions, airspace surveillance data in the tower, surface surveillance, flight data handling, air/ground communications, data processing and display systems, weather-related systems, and landing systems.

The second interim report, "Tower-Related Major System Development Programs,"* contains sections 6 through 11 of the overall report and addresses those Major System Development Programs (MSDPs) which may have an impact on the current tower cab environment, existing systems, and/or operations. Included are Discrete Address Beacon System (DABS), Airport Surface Detection Equipment-3 (ASDE-3), Tower Airport Ground Surveillance System (TAGS), Terminal Information Processing System (TIPS), ARTS II and ARTS III Enhancements, Flight Service Station (FSS) Automation, Vortex Advisory System (VAS), Wake Vortex Advisory System (WVAS), Wind Shear Detection System (WSDS), and the Microwave Landing System (MLS). Each System is described in terms of its functional objectives, planned equipment, interfaces with other systems and with controllers, failure modes, and current development/deployment status.

In this (the third) report, the impact of the tower-related MSDPs on the tower cab environment is analyzed from several points of view: how the systems information and displays might be used to

*Systems formerly termed "UG3RD Systems" or "UG3RD Generation Systems" are now and henceforth referred to as "Major System Development Programs (MSDPs)."

approach idealized controller station configurations; how the cab equipment and displays resulting from these systems might be "fitted" into existing controller position configurations, with minimum change in design and minimum integration; how those systems which are, as yet, incompletely defined might evolve and affect the tower-cab environment; how the data-processing functions and equipment of the systems might be better integrated; and how, or if, economies might be achieved through common siting of sensors for the ASTC/TAGS and VAS systems.

METRIC CONVERSION FACTORS

Approximate Conversions to Metric Measures

Symbol	When You Know	Multiply by	To Find	Symbol
		LENGTH		
in	inches	2.5	centimeters	cm
ft	feet	30	centimeters	cm
yd	yards	0.9	meters	m
mi	miles	1.6	kilometers	km
		AREA		
in^2	square inches	6.5	square centimeters	cm^2
ft^2	square feet	0.09	square meters	m^2
yd^2	square yards	0.8	square meters	m^2
mi^2	square miles	2.6	square kilometers	km^2
	acres	0.4	hectares	ha
		MASS (weight)		
oz	ounces	28	grams	g
lb	pounds	0.45	kilograms	kg
	short tons (2000 lb)	0.9	tonnes	t
		VOLUME		
tsp	teaspoons	5	milliliters	ml
Tbsp	tablespoons	15	milliliters	ml
fl oz	fluid ounces	30	milliliters	ml
c	cups	0.24	liters	l
pt	pints	0.47	liters	
qt	quarts	0.95	liters	
gal	gallons	3.8	liters	
ft^3	cubic feet	0.03	cubic meters	m^3
yd^3	cubic yards	0.76	cubic meters	m^3
		TEMPERATURE (exact)		
°F	Fahrenheit temperature	5/9 (after subtracting 32)	Celsius temperature	°C

Approximate Conversions from Metric Measures

Symbol	When You Know	Multiply by	To Find	Symbol
		LENGTH		
mm	millimeters	0.04	inches	in
cm	centimeters	0.4	inches	in
m	meters	3.3	feet	ft
m	meters	1.1	yards	yd
km	kilometers	0.6	miles	mi
		AREA		
cm^2	square centimeters	0.16	square inches	in^2
m^2	square meters	1.2	square yards	yd^2
km^2	square kilometers	0.4	square miles	mi^2
ha	hectares (10,000 m^2)	2.5	acres	
		MASS (weight)		
g	grams	0.035	ounces	oz
kg	kilograms	2.2	pounds	lb
t	tonnes (1000 kg)	1.1	short tons	
		VOLUME		
ml	milliliters	0.03	fluid ounces	fl oz
l	liters	2.1	pints	pt
l	liters	1.06	quarts	qt
l	liters	0.26	gallons	gal
m^3	cubic meters	35	cubic feet	ft^3
m^3	cubic meters	1.3	cubic yards	yd^3
		TEMPERATURE (exact)		
°C	Celsius temperature	9/5 (then add 32)	Fahrenheit temperature	°F

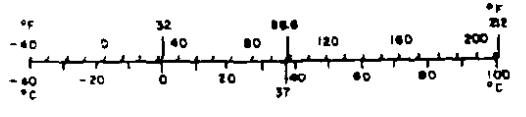

TABLE OF CONTENTS

Section		Page
12.	FOUNDATION FOR THE TOWER CAB INTEGRATION ANALYSIS..	12-1
12.1	Objectives.....	12-1
12.2	Approach.....	12-1
12.3	Motivation and Organization.....	12-1
12.4	Scope of the Studies.....	12-3
13.	IDEALIZED CONTROLLER STATION CONFIGURATIONS.....	13-1
13.1	Introduction.....	13-1
13.1.1	Information Requirements.....	13-1
13.1.2	Action Requirements.....	13-2
13.1.3	Derivation of Proposed Configurations	13-15
13.2	Local Control Position.....	13-16
13.2.1	Displays.....	13-16
13.2.2	Controls.....	13-16
13.2.3	Arrangement.....	13-20
13.3	Ground Control.....	13-25
13.4	Clearance Delivery.....	13-25
13.5	Flight Data.....	13-25
13.6	Synthesis from MSDP Elements.....	13-28
13.7	Human Factors Summary Discussion.....	13-29
13.8	Feasibility Analysis and Interface Issues....	13-29
13.8.1	Operational Considerations.....	13-29
13.8.2	Data Processing Considerations.....	13-49
14.	TOWER CAB CONFIGURATION STUDIES: EQUIPMENT INTEGRATION.....	14-1
14.1	Introduction.....	14-1
14.2	Los Angeles (LAX) Case Study.....	14-3
14.2.1	Current Good Visibility Operation....	14-3
14.2.2	Current Poor Cab-Visibility Operation.....	14-7
14.2.3	Future Los Angeles Operation.....	14-11
14.2.4	IFR Operation in the Late 1980's.....	14-12
14.2.5	VFR Operation in the Late 1980's.....	14-20
14.2.6	Overall System Assessment.....	14-20
14.3	Chicago O'Hare International Airport (ORD) Case Study.....	14-22
14.3.1	Current Good Visibility Operation....	14-22
14.3.2	Current Poor Visibility Operations...	14-29

TABLE OF CONTENTS (CONT.)

Section		Page
14.3.3	Future O'Hare Operation.....	14-31
14.3.4	O'Hare Operation in the Late 1980's...	14-31
14.3.5	VFR Operation at O'Hare in the Late 1980's.....	14-36
14.3.6	Overall O'Hare System Assessment.....	14-36
14.4	St. Louis (STL) Case Study.....	14-38
14.4.1	Current Good Visibility Operation.....	14-38
14.4.2	Current Poor Visibility Operation.....	14-43
14.4.3	Future St. Louis Operation.....	14-45
14.4.4	STL Operation in the Late 1980's.....	14-46
14.4.5	Overall System Assessment.....	14-49
14.5	Boston Logan International Airport (BOS) Case Study.....	14-51
14.5.1	Current Good Visibility Operation.....	14-51
14.5.2	Current Poor Visibility Operation.....	14-56
14.5.3	Future Logan Operation.....	14-57
14.5.4	Logan Operation in the Late 1980's....	14-59
14.5.5	VFR Operation at Logan in the Late 1980's.....	14-67
14.5.6	Overall Logan System Assessment.....	14-69
14.6	Bedford Hanscom Field (BED) Case Study.....	14-69
14.6.1	Current Good Visibility Operation.....	14-69
14.6.2	Current Poor Visibility Operation.....	14-74
14.6.3	Future Hanscom Operation.....	14-74
14.6.4	Hanscom Operation in the Late 1980's..	14-74
14.6.5	VFR Operation at Hanscom In the Late 1980's.....	14-77
14.6.6	Overall Hanscom System Assessment.....	14-77
14.7	Portland (Maine) International Airport (PWM) Case Study.....	14-77
14.7.1	Current Good Visibility Operation.....	14-77
14.7.2	Current Poor Visibility Operation.....	14-82
14.7.3	Future Portland Operation.....	14-82
14.7.4	Portland Operation in the Late 1980's.	14-83
14.7.5	Overall Portland System Assessment....	14-84
14.8	Operational Study Summary.....	14-85
14.8.1	Summary of Results.....	14-85
14.8.2	Recommendations.....	14-89
14.9	Feasibility Analysis and Interface Issues.....	14-91

TABLE OF CONTENTS (CONT.)

Section		Page
15.	INTEGRATION ANALYSIS OF ADVANCED SYSTEMS	15-1
15.1	Interfaces	15-2
15.2	Interface Analysis	15-12
15.3	Summary of Problems	15-21
16.	INTEGRATION OF SENSOR SYSTEMS	16-1
16.1	TAGS/VAS Sensor Integration	16-1
16.1.1	TAGS Intrasystem Communications Requirements	16-2
16.1.2	O'Hare TAGS Sensor Siting Study	16-5
16.1.3	O'Hare VAS Sensor Siting Study	16-13
16.1.4	Feasibility of Using Existing VAS Sites for TAGS Sensor Locations	16-17
16.1.5	Cost Impact of Shared Siting - O'Hare.	16-21
16.1.6	Extension of the Analysis to Los Angeles International Airport	16-23
16.1.7	Summary and Conclusions	16-30
17.	GENERAL TOWER-RELATED DATA PROCESSING	17-1
17.1	Analysis of General Issues of Information Processing	17-1
17.1.1	Characterization of Tower-related Data Processing	17-1
17.1.2	General Factors Affecting Choices	17-6
17.1.3	Specific Factor Affecting Choices	17-9
17.2	Analysis of Functional Aspects of Tower Cab Systems	17-13
17.2.1	Functional Description of the Systems.	17-13
17.2.2	Functional Development	17-36
17.3	Overall Analysis and Recommendations	17-44
17.3.1	Analysis and Trade-off Studies	17-44
17.3.2	Conclusions and Recommendations	17-49
18.	SUMMARY OF FINDINGS, CONCLUSIONS, AND RECOMMENDATIONS	18-1
18.1	Introduction	18-1
18-2	Physical Integration in the Cab and Airport	18-1
18.2.1	Tower Cab Studies	18-1

TABLE OF CONTENTS (CONT.)

Section		Page
18.2.2	Integration of Keyboards.....	18-3
18.2.3	Integration of Displays.....	18-4
18.2.4	Idealized Controller Stations.....	18-4
18.2.5	Sensor Collocation.....	18-5
18.3	The Effect on Operations in the CAB.....	18-6
18.4	Human Factors Aspects of System Integration..	18-6
18.5	Functional Integration of the System.....	18-8
18.6	Interfaces among Tower Cab Systems.....	18-8
18.7	Failure Modes in the Tower Cab.....	18-14
APPENDIX C.	GROUND CONTROL STAFFING REQUIREMENTS.....	C-1

LIST OF ILLUSTRATIONS

Figure		Page
12.4-1.	Tower Cab - Composite of the MSDP Cab/Airport Equipments and External Cab Interfaces.....	12-6
13.2-1.	II-A Basic.....	13-22
13.2-2.	II-B Weather.....	13-23
13.2-3.	II-C&D Navaids and Taxiways.....	13-24
13.2-4.	Possible Arrangement of Idealized Local Control Position.....	13-26
13.5-1.	Possible Arrangement of Idealized Clearance Delivery or Flight Data Position.....	13-27
13.8-1.	ARTS/Basic Keyboard with PEM.....	13-43
13.8-2.	Key Layout for TIPS Keyboard Module for Various Control Positions.....	13-44
13.8-3.	Integrated TIPS/ARTS Keyboard.....	13-45
13.8-4.	Integrated TAGS/TIPS/ARTS Keyboard.....	13-47
14.2-1.	Los Angeles Airport Layout and Cab Location.....	14-4

LIST OF ILLUSTRATIONS (CONT.)

Figure		Page
14.2-2.	Los Angeles Cab Layout and Visual Line-of-Sight Assumptions	14-5
14.2-3.	Display Viewing Area Estimate	14-8
14.2-4.	Los Angeles Cab Layout and Current Controller Locations in Poor-Visibility IFR	14-10
14.2-5.	Major Cab Displays	14-13
14.2-6.	TIPS Installation Options	14-14
14.2-7.	Los Angeles IFR Operational Layout in the Late 1980's	14-17
14.2-8.	TAGS Display Setup at Los Angeles for 2 Channels	14-19
14.2-9.	Los Angeles VFR Operational Layout in the Late 1980's	14-21
14.3-1.	O'Hare Airport Layout and Cab Location	14-23
14.3-2.	O'Hare Cab Layout and Visual Line-of-Sight Assumptions	14-24
14.3-3.	O'Hare Current IFR Operational Layout	14-28
14.3-4.	ASDE Display Setups at O'Hare	14-30
14.3-5.	O'Hare IFR Operational Layout in the Late 1980's	14-32
14.3-6.	O'Hare VFR Operational Layout in the Late 1980's	14-37
14.4-1.	St. Louis Airport Layout and Cab Location	14-39
14.4.2.	St. Louis Cab Layout and Visual Line-of-Sight Assumptions	14-41
14.4-3.	St. Louis IFR Operational Layout in the Late 1980's	14-44
14.4-4.	ASDE Display Setup at St. Louis Airport for 2 Channels	14-48
14.4-5.	St. Louis VFR Operational Layout in the Late 1980's	14-50
14.5-1.	Logan Airport Layout and Cab Location	14-53

LIST OF ILLUSTRATIONS (CONT.)

Figure		Page
14.5-2.	Logan International Airport Cab Layout and Visual Line-of-Sight Assumptions.....	14-54
14.5-3.	Logan International Airport Current IFR Operational Layout.....	14-58
14.5-4.	Current/Proposed MSDP Layout for LC-1 Station....	14-60
14.5-5.	Current/Proposed MSDP Layout for LC-2 Station....	14-61
14.5-6.	Current GC Station/Proposed MSDP GC-1 and GC-2 Stations.....	14-63
14.5-7.	Logan International Airport IFR Operational Layout in the Late 1980's.....	14-64
14.5-8.	ASDE Display Setups at Logan.....	14-66
14.5-9.	Logan Airport VFR Operational Layout in the Late 1980's.....	14-68
14.6-1.	Hanscom Field Layout and Cab Location.....	14-70
14.6-2.	Hanscom Field Cab Layout and Visual Line-of-Sight Assumptions.....	14-72
14.6-3	Hanscom Field IFR Operational Layout in the Late 1980's.....	14-75
14.7-1.	Portland (Maine) Layout and Cab Location.....	14-80
14.7-2.	Portland (Maine) Cab Layout and Visual Line-of-Sight Assumptions.....	14-81
15.1-1.	Simplified Schematic of the Major Interfaces.....	15-3
15.2-1.	Arrival/Departure/Arrival for Single Runway.....	15-17
15.2-2.	Arrival/Departure/Departure/Arrival for Single Runway.....	15-18
15.2-3.	Arrival/Departure/Departure/Arrival for Airborne Intersections.....	15-20
16.1-1.	TAGS Functional Block Diagram (Trilateration Sensor Portion).....	16-3

LIST OF ILLUSTRATIONS (CONT.)

Figure		Page
16.1-2.	O'Hare DAS Siting (Preliminary).....	16-6
16.1-3.	Interrogator Coverage Zones.....	16-8
16.1-4.	Contours of Constant Uncertainty.....	16-8
16.1-5.	Receive Station Tower Details.....	16-10
16.1-6.	Brassboard Antenna Tower Details.....	16-11
16.1-7.	O'Hare VAS Site Locations.....	16-14
16.1-8.	VAS Tower Ideal Locations.....	16-15
16.1-9.	O'Hare VAS DAS Site Collocations.....	16-18
16.1-10.	Initial Los Angeles TAGS Siting.....	16-24
16.1-11.	TAGS/VAS Collocation.....	16-26
16.1-12.	Interrogation Cell Distortion on Taxiway near 25L Threshold (Los Angeles).....	16-28
17.2-1.	Block Diagram of Class A Equipment.....	17-14
17.2-2.	Tower/TRACON System Hierarchy.....	17-17
17.2-3.	Block Diagram of Class B Equipment.....	17-33
17.2-4.	Block Diagram of Class C Equipment.....	17-34
17.2-5.	Integrated Class A Cab - Collocated TRACON.....	17-37
17.2-6.	Integrated Class A Cab - Remote TRACON.....	17-38
17.2-7.	Integrated Class B Cab - Collocated TRACON.....	17-43
17.3-1.	Mini/Microprocessor Configuration.....	17-48

LIST OF TABLES

Table		Page
12.4-1.	POTENTIAL CAB INTERFACES - NOT YET WELL DEFINED...	12-8
12.4-2.	MAJOR CAB EQUIPMENT DEPLOYMENTS.....	12-10
13.1-1.	INFORMATION REQUIREMENTS POSITION: LOCAL CONTROL (1).....	13-3
13.1-1.	INFORMATION REQUIREMENTS POSITION: LOCAL CONTROL (2).....	13-4
13.1-1.	INFORMATION REQUIREMENTS POSITION: GROUND CONTROL (1).....	13-5
13.1-1.	INFORMATION REQUIREMENTS POSITION: GROUND CONTROL (2).....	13-6
13.1-1.	INFORMATION REQUIREMENTS POSITION: CLEARANCE DELIVERY.....	13-7
13.1-1.	INFORMATION REQUIREMENTS POSITION: FLIGHT DATA...	13-8
13.1-2.	INFORMATION ENTRY AND ACTION REQUIREMENTS POSITION: LOCAL CONTROL (1).....	13-9
13.1-2.	INFORMATION ENTRY AND ACTION REQUIREMENTS POSITION: LOCAL CONTROL (2).....	13-10
13.1-2.	INFORMATION ENTRY AND ACTION REQUIREMENTS POSITION: GROUND CONTROL (1).....	13-11
13.1-2.	INFORMATION ENTRY AND ACTION REQUIREMENTS POSITION: GROUND CONTROL (2).....	13-12
13.1-2.	INFORMATION ENTRY AND ACTION REQUIREMENTS POSITION: CLEARANCE DELIVERY.....	13-13
13.1-2.	INFORMATION ENTRY AND ACTION REQUIREMENTS POSITION: FLIGHT DATA.....	13-14
13.2-1.	LOCAL CONTROL DISPLAY REQUIREMENTS.....	13-17
13.2-2.	LOCAL CONTROL REQUIREMENTS FOR CONTROLS.....	13-21

LIST OF TABLES (CONT.)

Table		Page
13.8-1.	TIME IN POOR CAB VISIBILITY FOR ASTC SITES WITH ANNUAL OPERATIONS OVER 300,000	13-32
13.8-2.	ESTIMATED DEPLOYMENT OF MSDP KEYBOARDS IN TERMS OF CAB CONTROLLER STATIONS	13-35
13.8-3.	PRELIMINARY LIST OF THE KEYBOARD CONTROL KEYS FOR ARTS, TAGS, AND TIPS	13-37
13.8-4.	LIST OF ARTS KEYBOARD FUNCTIONS	13-38
13.8-5.	PRELIMINARY LIST OF SPECIAL TIPS KEYBOARD SYMBOLS	13-39
13.8-6.	LIST OF ARTS KEYBOARD FUNCTIONS	13-40
13.8-7.	PRELIMINARY LIST OF TIPS KEYBOARD FUNCTIONS	13-41
13.8-8.	PRELIMINARY LIST OF TAGS KEYBOARD FUNCTIONS	13-43
13.8-9.	MODE SWITCHING LOGIC FOR THE INTEGRATED TAGS/TIPS/ ARTS KEYBOARD	13-48
14.2-1.	LOS ANGELES OPERATIONS RATES - CURRENT AND FORECASTED	14-6
14.2-2.	LOS ANGELES CONTROLLER STAFFING	14-6
14.3-1.	O'HARE OPERATIONS RATES - CURRENT AND FORECASTED	14-25
14.3-2.	O'HARE CONTROLLER STAFFING	14-25
14.3-3.	O'HARE CONTROLLER MOVEMENT	14-27
14.4-1.	ST. LOUIS OPERATIONS RATES - CURRENT AND FORECASTED	14-40
14.4-2.	ST. LOUIS CONTROLLER STAFFING	14-40
14.4-3.	ST. LOUIS CONTROLLER MOVEMENT	14-40
14.5-1.	LOGAN OPERATIONS RATES - CURRENT AND FORECASTED	14-52
14.5-2.	LOGAN CONTROLLER STAFFING	14-52
14.6-1.	HANSCOM OPERATIONS RATES - CURRENT AND FORECASTED	14-71
14.6-2.	HANSCOM CONTROLLER STAFFING	14-71
14.7-1.	PORTLAND (MAINE) OPERATIONS RATES - CURRENT AND FORECASTED	14-78

LIST OF TABLES (CONT.)

Table		Page
14.7-2.	PORTLAND (MAINE) CONTROLLER STAFFING	14-78
15.1-1.	MAJOR INTERFACES	15-4
16.1-1.	TAGS DAS CONTROL INFORMATION FLOW	16-4
16.1-2.	TAGS TRILATERATION SENSOR HARDWARE COST ESTIMATE (O'HARE)	16-12
16.1-3.	VAS O'HARE SENSOR INSTALLATION COSTS	16-16
16.1-4.	VAS SITE USE FOR TAGS SENSOR LOCATION	16-19
16.1-5.	RUNWAY COVERAGE FOR TAGS INTERROGATORS SITED AT CURRENT VAS LOCATIONS	16-20
16.1-6.	VAS COST ITEMS ELIMINATED FOR COLLOCATION OF SENSORS	16-22
16.1-7.	COST SAVINGS AS A PERCENTAGE OF TOTAL SYSTEM INSTALLATION COSTS - O'HARE	16-22
16.1-8.	COST SAVINGS AS A PERCENTAGE OF INSTALLATION COSTS EXCLUSIVE OF ACQUISITION COSTS - O'HARE	16-23
16.1-9.	RUNWAY AND TAXIWAY COVERAGE FOR TAGS LAX INTERROGATOR SITING	16-29
16.1-10.	LOS ANGELES VAS SENSOR INSTALLATION COSTS	16-31
16.1-11.	TAGS TRILATERATION SENSOR HARDWARE COST ESTIMATE	16-32
16.1-12.	COST SAVINGS RELATED TO TOTAL SYSTEM COSTS-LOS ANGELES THREE-SITE COLLOCATION	16-33
17.2-1.	HIPO CHART - OVERALL TOWER/TRACON	17-18
17.2-2.	HIPO CHART - SRAP/SRAP II	17-20
17.2-3.	HIPO CHART - DABS	17-21
17.2-4.	HIPO CHART - TAGS	17-22
17.2-5.	HIPO CHART - TAGS DATA ACQUISITION SUBSYSTEM	17-23
17.2-6.	HIPO CHART - TAGS PROCESSOR SUBSYSTEM	17-24

LIST OF TABLES (CONT.)

Table		Page
17.2-7.	HIPO CHART - RDBM	17-25
17.2-8.	HIPO CHART - TIPS	17-26
17.2-9.	HIPO CHART - TIPS TFDP	17-27
17.2-10.	HIPO CHART - TIPS TDS	17-28
17.2-11.	HIPO CHART - ARTS IIIA	17-29
17.2-12.	HIPO CHART - VAS/WVAS/WIND SHEAR	17-30
17.2-13.	HIPO CHART - METEOROLOGICAL	17-31
17.2-14.	DATA TYPES AT THE SYSTEM INTERFACES	17-35
18.6-1.	MSDP TOWER-SYSTEM INTERFACES	18-9
C-1.	CURRENT GROUND CONTROL STAFFING	C-3
C-2.	GROUND CONTROL STAFFING ESTIMATE	C-4

GLOSSARY

A/C	Aircraft
A/N	Alphanumeric
AC	Approach Control
ACID	Aircraft Identification
AMA	Airport Movement Area
AMPS	ATCRBS Monopulse Processing System
ARSR	Air Route Surveillance Radar
ARTCC	Air Route Traffic Control Center
ARTS	Automated Radar Terminal System
ASDE	Airport Surface Detection Equipment
ASR	Airport Surveillance Radar
ASTC	Airport Surface Traffic Control
ATCBI	ATC Beacon Interrogator
ATCRBS	ATC Radar Beacon System
ATIS	Automatic Terminal Information Service
BDAS	Beacon Data Acquisition Subsystem
BRITE	Bright Radar Indicator Tower Equipment
CD	Clearance Delivery
CDR	Critical Data Recording
CRT	Cathode Ray Tube
CTA	Calculated Time of Arrival
DABS	Discrete Address Beacon System
DAS	Data Acquisition Subsystem
DC	Departure Control
DDC	Display, Data Entry and Control
DEDS	Data Entry and Display Subsystem
DPS	Data Processing Subsystem
ETA	Estimated Time of Arrival
FD	Flight Data
FDEP	Flight Data Entry and Printout
FP	Flight Plan
GDOP	Geometric Dilution of Precision
GC	Ground Control
HC	Helicopter Control

ILS	Instrument Landing System
IOP	Input-Output Processor
IOT	Input-Output Terminal
IPC	Intermittent Positive Control
LAWRS	Limited Aviation Weather Reporting Service
LC	Local Control
LOS	Line of Sight
MLS	Microwave Landing System
MSAW	Minimum Safe Altitude Warning
MSDP	Major System Development Program
NAS	National Airways System
NAVAIDS	Navigation Aids
NOTAM	Notice to Airmen
NUBRITE	New BRITE
PEM	Position Entry Module
PTD	Predicted Time of Departure
R/W	Runway
RDBM	Remote Display Buffer Memory
REIL	Runway End Identifier Lights
RVR	Runway Visual Range
RVV	Runway Visibility Value
SPI	Special Position Indicator
SRAP	Sensor Receiver and Processor
TAGS	Tower Airport Ground System
TCA	Terminal Control Area
TDP	Tower Display Processor
TELCO	Telephone Company
TFDP	Terminal Flight Data Processor
TIPS	Terminal Information Processing System
TOA	Time of Arrival
TRACAB	Terminal Radar Cab
TRACON	Terminal Radar Control
TS	Tower Supervisor
VAS	Vortex Advisory System
VASI	Visual Approach Slope Indicator

WSDS	Wind Shear Detection System
WVAS	Wake Vortex Avoidance System
WX	Weather.

12. FOUNDATION FOR THE TOWER CAB INTEGRATION ANALYSIS

12.1 OBJECTIVES

The tower-cab integration analysis was undertaken for the purpose of identifying issues or problems associated with the introduction of new major systems into the existing ATC system's tower-cab environment, and, where feasible, to postulate solutions or identify areas for further investigation by the FAA. The study presented in this report, therefore, examines "first-level" issues. The conclusions drawn or solutions proposed are preliminary in nature, and are intended to be the foundation for more detailed studies or experimentation to verify feasibility and/or identify lower-level problems.

12.2 APPROACH

The integration analysis project was carried out over a nine-month period, January through September 1977. It was divided into three phases of approximately three months each. Fully two-thirds of the effort was devoted to examination, characterization, and documentation of first, the existing tower cab environment; and then, the various new major systems which could impact upon it.[1,2] This left a rather limited amount of time for the task of integrating the information and performing the requisite analysis. It was necessary, therefore, to structure the analysis into a set of parallel independent studies to examine the integration problem from several points of view. While the results of each of the independent study efforts was exposed to an exchange review and critique, there was no opportunity to perform a second iteration through each study to resolve points of contention. Thus, this report presents the results of the independent studies, each followed by comments generated during the exchange review.

12.3 MOTIVATION AND ORGANIZATION

Several important factors presented themselves during the

first two phases of this integration analysis which influenced the manner in which the third phase was structured.

a. Each tower cab is essentially unique in layout, use of space, and the variations employed in combining controller positions, making generalizations and standardization extremely difficult.

b. The autonomous design and development process of each new system cannot adequately address optimum presentation of total cab information and overall workload of the controller from a human factors point of view.

c. The introduction of several large pieces of new equipment into "busy" tower cabs is likely to create problems in terms of space and operations without rearrangement of work stations and/or integration of some equipment.

d. Several of the proposed new major systems (TIPS, TAGS, ASDE, and ARTS-BRITE) will result in relatively large tower-cab displays.

e. Several of the new major systems which were considered have only a minor link with the tower cab (e.g., M&S); the design of several other systems have not been sufficiently defined, at the time of this study, to assess their impact on the tower cab from an operational, equipment-space, or human factors points of view with a high degree of certainty (WVAS, WSD, and DABS data link).

f. Several of the new tower-related major systems independently involve the use of sensors at the airport site.

g. Many of the new major systems involve new computer systems or requirements for computer system's resources or interfaces.

h. Many of the new major systems under consideration will not be deployed in the field until the mid-1980s or later, thus minimizing the issue to time-phasing between 1978 and 1985.

A set of autonomous study activities was formulated to address these points. The results are presented as separate sections in this report as follows:

Points 1 and 2, generalization of the tower-cab environment and the integration of total cab information, are considered in the Human Factors study: Idealized Controller Station Configurations, Section 13.

Points 1, 3, and 4, the uniqueness of tower cabs, and the expected introduction of large displays into the cab from several new major systems, are considered in the Operational analysis: Tower-Cab Configurations Studies-Equipment Integration, Section 14.

Point 5, the possible impact of new major systems for which design concepts and/or design details are not yet firm, is considered in Section 15: Integration Analysis of Advanced Systems.

Point 6, integration of several systems utilizing sensors deployed over the airport surface, is discussed in Section 16: Sensor Integration.

Point 7, computer system requirements, is addressed in Section 17: General Tower-Related Data Processing.

As a result of point 8, 1985 to 1990 deployment of most systems, the time-phasing of system installation between 1978 and the late 1980s was not considered as a vital issue.

Section 18 summarizes and integrates the major findings of Sections 13 through 17.

12.4 SCOPE OF THE STUDIES

This section gives a brief introduction to the separate integration studies which were carried out in parallel, and indicates the approach and scope of each.

In Section 13, idealized control tower-cab positions are derived, based solely on the controllers' information requirements, unconstrained by physical considerations related to existing equipment designs and interfaces. For each position, the information provided by current systems and by proposed Major System Development Programs (MSDPs) is assumed to be available, and voice

communication by radio is assumed as the output mode. Then, the functions to be performed by the controller (see Section 4 of the second report[2]) are used to evaluate the needs for information, and from these needs, an idealized system of displaying the information is proposed with the objective of minimum display surfaces and control panels required at the position. These idealized configurations are then discussed briefly in terms of how they might be approximated with planned MSDP devices.

Section 14 addresses the impact on the tower-cab operational environment of the introduction of Display, Data entry, and Control (DDC) equipment associated with elements of the Major System Development Programs. The space required for large devices and the effectiveness of these devices as substitutes for existing devices or manual procedures was of particular concern. The objective was to examine methods of introducing the DDC units and integrating them into the operational environment with a minimum amount of re-design. Integration for cost reduction was not considered. Only large DDC units were considered in this analysis, since it was felt that they would have the principal impact on the cab. Display/control devices associated with such equipment as VAS, WVAS, and wind shear systems were not included due to their comparatively small size.

The questions addressed were: If the current cab equipment and controller station layout were to be maintained, and the large DDC units for such systems as TIPS, TAGS, and ASDE-3 were added to the cab,

a. what would be the impact on the controller duties and cab operation?

b. does the result seem acceptable or is station and equipment integration required to provide acceptable performance? and

c. if station and equipment integration is required, how should it be accomplished to provide optimum controller performance?

To arrive at a determination of which systems and equipment could have a "major" impact on tower-cab space and operations, the

following procedure was carried out:

The MSDP system equipments related to the tower cab were categorized. The first two categories consist of

1) well defined equipments which can have a major impact on the tower cab (major cab equipments), and

2) equipments whose interfaces with the cab are considered to be minor or not yet well defined (minor cab equipments).

The major cab equipments were then treated in greater detail throughout the analysis. The major cab equipments are depicted in Figure 12.4-1. The ASTC equipments (TAGS and ASDE-3) and the wind shear system are exclusively cab-related. Each system has sensors located on the airport surface, equipment located in the cab-equipment room, and/or processing, and Display, Data entry, and Control (DDC) units located only in the cab. The remaining systems, TIPS, ARTS, and VAS, are terminal area/approach control systems but have significant impact on the cab. TIPS will provide a Tower Display Subsystem (TDS) with a processor located in the cab-equipment room and DDC units in the cab. ARTS will provide the BRITE Alphanumeric equipment to the cab for VFR advisories, limited IFR control, or, in the case of a TRACAB, full radar-approach control service. VAS will have sensors on the airport surface, processors, and equipment in the cab-related equipment room and DDC units in the cab. However, it will also provide DDC units to the TRACON where Approach Control will be the primary user. For that reason, it was considered a terminal-area system but with strong cab impact.

The minor cab-related systems are also shown in Table 12.4-1. In this table, possible cab interfaces are hypothesized along with the means for providing the interface. These interfaces are hypothesized along with the means for providing the interface. These interfaces are, as yet, not well defined by the respective programs, and so, were not treated in detail in this analysis.

In considering integration issues relative to cab operations, a further screening of major cab-related equipments was performed.

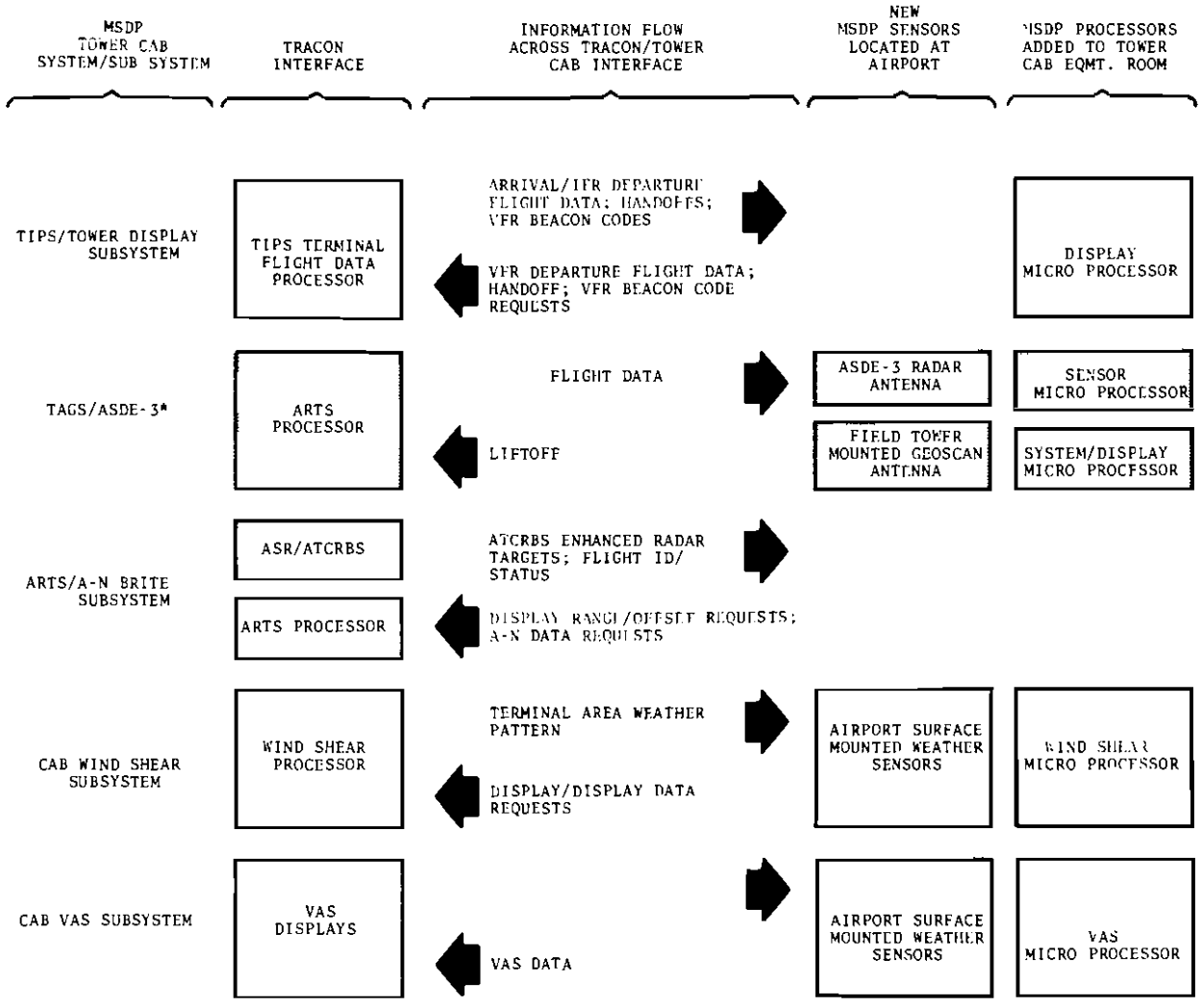

NOTES

* TAGS CONSISTS OF ALL BLOCKS BOTH SHADED AND UNSHADED
ASDE-3 CONSISTS OF ONLY UNSHADED BLOCKS

FIGURE 12.4-1 TOWER CAB - COMPOSITE OF THE MSDP CAB/AIRPORT EQUIPMENTS AND EXTERNAL CAB INTERFACES

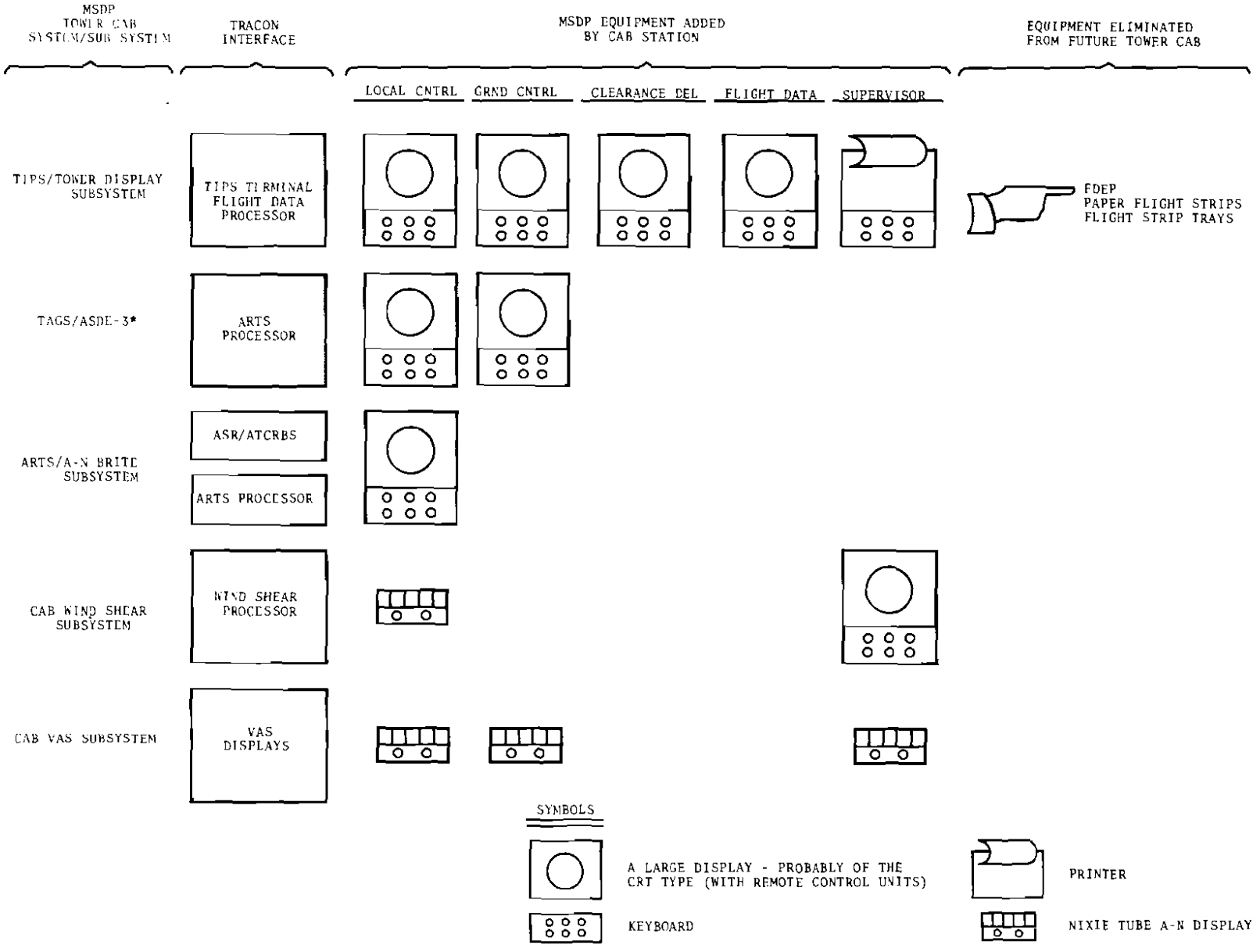

FIGURE 12.4-1 TOWER CAB - COMPOSITE OF THE MSDP CAB/AIRPORT EQUIPMENTS AND EXTERNAL CAB INTERFACES (CONCLUDED)

FAA WJH Technical Center
00092461

TABLE 12.4-1. POTENTIAL CAB INTERFACES - NOT YET WELL DEFINED

ELEMENT	FROM CAB	TO CAB	PROBABLE MEANS
M&S	SPACING REQUESTS	REQUEST CONFIRMATION	ARTS A/N BRITE
DABS DATA LINK	FLIGHT DATA AND TRANSMISSION COMMANDS	CLEARANCE REQUESTS AND RECEIPT CONFIRMATION	TIPS
	TAKE OFF (CRITICAL) CLEARANCE TRANS-MISSION COMMANDS (POOR VISIBILITY IFR APPLICATION)	CLEARANCE RECEIPT CONFIRMATION	TIPS
MLS		CURVED APPROACH PATH SELECTED	ARTS/A-N BRITE
WVAS		SPACING REQUIREMENT	ARTS/A-N BRITE

As seen from Figure 12.4-1, only TIPS, the ASTC equipments (TAGS and ASDE-3), and BRITE equipment will require large displays (probably CRT displays) at active control positions. The BRITE, ASDE-3, and TAGS displays are all approximately 19 by 19 by 27 inches deep. All three require control panels, and the BRITE A/N equipment and TAGS require keyboards. The TIPS display with quick-action data entry is approximately 12 by 18 by 14 inches deep. On the other hand, the VAS and wind shear systems are more modest in size. The VAS unit is approximately 3 by 7 by 6 inches deep, and the wind shear (LLWSAS) unit is approximately 8 by 8 inches high. Due to their large size, the TIPS, TAGS, ASDE-3, and BRITE Display, Data entry, and Control (DDC) units were termed major cab DDC units. It was felt that these DDC units would have a dominant effect on cab operations while the VAS and wind shear unit might simply be added to the appropriate stations.

Because each tower cab is unique in its layout, operations, use of space, and the variations employed in combining controller positions, it is not practical to postulate a "representative" tower cab and to draw generally applicable conclusions with regard to operational impact. For this reason, a case-study approach was chosen for this particular portion of the integration analysis. The problem that remained was one of how to classify tower cabs so that integration issues might be examined as a function of class. Facility level, operations rates, and cab size were suggested as classification parameters. However, installation of new equipment is the integration issue, and it became clear that the previously suggested classifications bore no correlation to the types of new systems and equipment which would be installed at a particular airport. Therefore, the mechanism chosen to classify tower cabs into representative groups for case study was the new system/equipment deployment plans.

Table 12.4.2 summarizes the deployment plans for the major cab-related equipment. It can be seen that airports which will be most affected in that they receive all major DDCs (ASTC, BRITE, and TIPS) are listed as the first 27 airports. Note that these

TABLE 12.4-2. MAJOR CAB EQUIPMENT DEPLOYMENTS

AIRPORT IDENTITY NAME & LOCATION		FACILITY LEVEL	CAB AREA FT^2	CY 1975* ITINERANT OPERATIONS (THOUSANDS)	BRITE(1)	TIPS	TAGS	ASDE-3	VAS	WIND SHEAR	CLASSIFICATION	
ORD	Chicago O'Hare**	V	400	690	B	X	X		X	X	CLASS A (4 AIRPORTS)	BRITE TIPS TAGS
ATL	Atlanta, Intl.	V		471	B	X	X		X	X		
LAX	Los Angeles Intl.**	V	480	454	B	X	X		X	X		
JFK	J.F. Kennedy Intl.	IV		341	B	X	X		X	X		
DEN	Denver Stapleton	IV	360	372	B	X		X	X	X	CLASS B (23 AIRPORTS)	BRITE TIPS ASDE-3
DFW	Dallas/Ft. Worth	V	620	345	B	X		X		X		
LGA	LaGuardia	IV		331	B	X		X	X	X		
SFD	San Francisco	IV	260	330	T	X		X	X	X		
STL	St. Louis Intl.**	IV	400	322	B	X		X		X		
MIA	Miami Intl.	V		315	B	X		X	X	X		
DCA	Washington, D.C.	IV	330	309	B	X		X				
PHL	Philadelphia Intl.	IV	230	307	B	X		X		X		
BOS	Boston Logan**	IV	420	284	B	X		X	X	X		
PIT	Pittsburgh Gt.	IV	290	284	B	X		X		X		
HNL	Honolulu	IV		270	A	X		X				
DTW	Detroit Metro.	IV	330	244	B	X		X		X		
MSP	Minneapolis/St. Paul	IV	380	224	B	X		X		X		
BAL	Baltimore/Wash.	IV	230	208	B	X		X				
CLE	Cleveland Hop.	IV		205	B	X		X		X		
EWR	Newark	III		193	B	X		X		X		
TPA	Tampa Intl.	IV		184	B	X		X		X		
IAH	Houston Inter.	IV		179	B	X		X		X		
MCI	Kansas City Intl.	III	400	168	B	X		X		X		
MDW	Midway Chicago	II		163	B	X		X				
SEA	Seattle/Tacoma	III	580	162	B	X		X		X		
SAN	San Diego Lind.	II		154	T	X		X				
MSY	New Orleans	III		141	B	X		X		X		
PHX	Phoenix Sky	III		335	B	X					CLASS C (48 AIRPORTS)	BRITE TIPS
SNA	Santa Ana	III		306	T	X						
LGB	Long Beach	III		291	B	X						
LAS	Las Vegas	IV		243	B	X				X		
BED	Bedford**	II		130	T	X						
.												
.												

*400 full time airport traffic control towers in CY 1975

**Selected for detailed analysis (Section 14).

(1) B - BRITE display on direct feed from ASR
T - Television Microwave Link remoted BRITE
A - ASR, probably has BRITE but not verified

TABLE 12.4-2. CONCLUDED

AIRPORT IDENTITY NAME & LOCATION	FACILITY LEVEL	CAB AREA FT^2	CY 1975* ITINERANT OPERATIONS (THOUSANDS)	BRITE(1)	TIPS	TAGS	ASDE-3	VAS	WIND SHEAR	CLASSIFICATION	
PTK Pontiac	II		113		X					CLASS D (14 AIRPORTS)	TIPS
SEE San Diego Gillespi	II		115		X						
LVK Livermore Muni	II		76		X						
RNT Renton	I		53		X						
.											
.											
.											
MEM Memphis	IV		279	B			X		X	CLASS E (7 AIRPORTS)	ASDE-3 BRITE
IND Indianapolis	III		187	B			X		X		
MKE Milwaukee	III		175	B			X				
PDX Portland Intl.	III		158	B			X				
IAD Washington Dulles	III		140	B			X				
BUF Buffalo Intl.	III		131	B			X				
CVC Cinncinnati Gr.	III		125	B			X				
SJU San Juan	III		203	A						CLASS F (78 AIRPORTS)	BRITE
SLC Salt Lake City	III		194	B							
BNA Nashville Metro.	III		186	B							
PWM Portland ME**	II		68	B							
.											
.											
.											
CCR Concord	II		123							CLASS G (240 AIRPORTS)	NO EQUIP.
VRB Vero Beach	II		94								
EMT El Monte	II		92								
.											
.											
.											

*400 full time airport traffic control towers in CY 1975

**Selected for detailed analysis (Section 14).

(1) B - BRITE display on direct feed from ASR
T - Television Microwave Link remoted BRITE
A - ASR, probably has BRITE but not verified

airports span four facility levels, cab areas from 230 to 620 square feet, and operations levels from 141,000 to 690,000 per year.

The equipment-oriented tower-cab classification scheme is shown in the right-hand column of the table. For the case studies, two airports were selected from Class A, Chicago-O'Hare and Los Angeles; two airports were selected from Class B, Boston-Logan and St. Louis; one airport was selected from Class C, Bedford; and Portland ME was selected from Class E to represent an ARTS II facility and a TRACAB. In this manner, all classes with two or more major DDC units were included, and the study spans large and medium ARTS III facilities, an ARTS II facilities, and all major DDC systems.

In Section 15, system-level integration issues are explored for tower-related systems that are presently in the early stages of design or development such as WVAS, Advanced Metering and Spacing, and WSDS. The purpose is identification of incompatibilities, duplications, gaps in information flow, and other system-level problems. Because of the advanced nature of these systems, however, the detailed design data needed for such an analysis are largely unavailable. Hence, it was found necessary to make general assumptions about the deployment, functional characteristics, and intent of many of these elements. To simplify the analysis, attention is restricted to a single tower configuration containing all the above elements. Because of the limited deployment planned for systems like Advanced Metering and Spacing, such a configuration probably will be found in only a few large towers, which have ARTS IIIA installations at the associated TRACON, and that none of them are TRACABs, The existence of a BRITE display in the cab is assumed.

The analysis carried out in this section assumes that the idealized controller station configurations of Section 13 are not realized. The method of analysis is to detail the interfaces among the MSDP elements under consideration and the tower personnel, and then, to compare their information content.

Section 16 investigates the potential benefits of integrating the TAGS and VAS system sensors. The deployment of ASTC Surveillance and Vortex Advisory Systems (VAS) at the major airports adds two more systems to the airport surface already congested with terminal surveillance, communications, meteorological, lighting, ILS, and other systems. Because the siting criteria for both the multilateration TAGS sensors and the VAS ground wind-sensing towers favor locations at the airport periphery (VAS near runway thresholds and TAGS to the outside of runways), at first glance, a collocation seems worth exploration. Possible benefits from such a collocation are a reduced number of new towers obstructing navigable airspace and installation cost savings. The first benefit is probably unquantifiable, but is motivated by Federal Aviation Regulation part 77.25. Installation cost savings are in the form of common cable runs, common access roads, and common site construction (grading, surveying, concrete foundations, etc.). Because cabling installation costs are a major factor in the overall cost, this study first estimated the intrasystem communications requirements for TAGS. From that, land-line and microwave-line costs for a given sensor deployment were determined. Installation siting costs were then examined independently for the TAGS and VAS deployments. Based on currently known siting criteria, the feasibility of collocating the TAGS and VAS sensor sites was determined. Finally, the cost savings of the resulting collocation were determined for both the region and FAA, expressed in dollars and also as a percentage of total acquisition plus installation cost.

The initial study was done for O'Hare, as considerable data exist concerning VAS tower locations and costs, and a preliminary TAGS siting study had been done previously. The same techniques were then applied to Los Angeles, the next most likely airport to receive TAGS.

Section 17 of the report presents a unified view of the data-processing activities which occur in the tower cab, or which occur elsewhere (e.g., in the TRACON), but are closely associated with

tower-cab activities. The classes of data which are gathered and processed are listed, and the flow of information through the system is examined. After the current and proposed data-processing systems are described, the factors which might affect any possible integrated design are presented.

An analysis follows of the functional aspects of the tower-cab systems which makes use of Hierarchical Input, Process, Output (HIPO) charts to show the relationships among the classes of data and the processing. This was done for each of the MSPD systems and for the various classes of tower cabs defined earlier.

Finally, some suggestions are made concerning the interconnection of the various systems and the integration of the data processing of some of them.

Section 18 provides a summary of the findings and conclusions of Sections 13 through 17. It also presents a consolidation of the differing points of view expressed as a result of the exchange review, which took place after the completion of the independent analyses. These analyses were carried out in parallel due to time constraints.

REFERENCES FOR SECTION 12

1. Hobbs, V.J. et al., Characterization of Current Tower Cab Environments, U.S. Department of Transportation, Transportation Systems Center, FAA-EM-77-10, November 1977.

2. Hobbs, V.J. et al., Tower-Related Major System Development Programs, U.S. Department of Transportation, Transportation Systems Center, FAA-EM-77-16, March 1978.

13. IDEALIZED CONTROLLER STATION CONFIGURATIONS

13.1 INTRODUCTION

In this section, idealized control tower cab positions are derived based solely on the controllers' information requirements, unconstrained by physical considerations related to existing equipment designs and interfaces. For each position, the information provided by current systems and by proposed MSDP is assumed to be available and voice communication by radio is assumed as the output mode. Then the functions to be performed by the controller (see Section 4) are used to evaluate the needs for information, and from these needs an idealized system of displaying the information is proposed with the objective of minimum display surfaces and control panels required at the position. These idealized configurations are then discussed briefly in terms of how they might be approximated with planned MSDP devices.

13.1.1 Information Requirements

For four generalized tower cab controller positions (Local Control, Ground Control, Clearance Delivery, and Flight Data) and principal kinds of information needed by the controller to perform the functions of the position were identified by expanding on the analyses of Section 4. Each requirement for information was then examined to determine the most useful mode of presentation from among the following:

Pictorial Display - for information specific to a geographical location.

Alphanumeric Display - for information best expressed in words and numbers.

Indicator - for information that could be shown by an on/off light or a pointer.

Audible Alarm - for emergency information that must be responded to without delay.

Communications - for information presently received via radio or telephone and unlikely to be affected by MSDP changes.

Each item of required information was further categorized by the most desirable type of generation from among the following:

Continuously - information that should be on display continuously - either as a permanent display or as data preset and left for a period of time.

Automatically - information that should be displayed, modified or deleted* by the system, without intervention by the controller.

Selectively - information displayed or deleted by action of the controller.

The results of this analysis are summarized in Table 13.1-1.

13.1.2 Action Requirements

For the four generalized tower cab controller positions (Local Control, Ground Control, Clearance Delivery and Flight Data) the principal actions required of the controller to control data flow at that position were identified. Each action requirement was examined to determine the nature of the required action from among the following:

Alphanumeric - to enter alphanumeric data into the system.

Actuation - to start, stop or set equipment.

Selection - to select information for display.

Communications - to enter information into the system vocally via radio or telephone (operations unlikely to be affected by MSDP changes).

The results of this analysis are summarized in Table 13.1-2.

---

*Occasionally, as in the case of alarms, an item of information may appear automatically and be removed from the display by the operator.

TABLE 13.1-1. INFORMATION REQUIREMENTS POSITION: LOCAL CONTROL (1)

	MODE						GENERATED	
	Pictorial Displ.	Alphanumeric	Indicator	Audible Alarm	Communications	Continuously	Automatically	Selectively
ALL AIRCRAFT								
Location	X			X	X		X	
ID		X			X		X	
Beacon Code		X					X	
Type and Weight		X					X	
Restrictions	X	X				X	X	
ARRIVING AIRCRAFT								
Approach Pattern	X					X		
Runway Assignment		X					X	
Time to Touchdown		X					X	
Gate Destination		X						X
DEPARTING AIRCRAFT								
Lineup Position		X					X	X
Runway Assignment		X						X
Departure Pattern	X					X		

TABLE 13.1-1. INFORMATION REQUIREMENTS POSITION: LOCAL CONTROL (2)

	MODE						GENERATED		
	Pictorial Displ.	Alphanumeric	Indicator	Audible Alarm	Communications		Continuously	Automatically	Selectively
RUNWAY/TAXIWAY									
Visibility	X	X							X
Wind (direction, speed, gusts, vortices, shear)	X	X		X				X	X
Forecast Changes in Weather		X							X
Navaids Status (ILS, MLS)		X	X	X				X	X
Lighting Status (taxiway, runway, approach, VASI)			X	X				X	X
Runway/Taxiway Condition		X					X		X
GENERAL									
Weather Observation		X						X	X
Weather Forecast		X							X
ATIS Letter and Altimeter Setting		X						X	
ATIS Text		X							X
Time		X						X	
Communications Channels			X				X		
Emergency Information	X	X	X	X	X			X	X

TABLE 13.1-1. INFORMATION REQUIREMENTS POSITION: GROUND CONTROL (1)

	MODE					GENERATED		
	Pictorial Displ.	Alphanumeric	Indicator	Audible Alarm	Communications	Continuously	Automatically	Selectively
ALL AIRCRAFT ON GROUND								
Location	X				X		X	
ID		X			X		X	
Beacon Code		X					X	
Type and Weight		X					X	
Restrictions		X				X		
ARRIVING AIRCRAFT								
Gate Destination		X			X		X	
Holding Requirements		X			X		X	
DEPARTING AIRCRAFT								
Runway Assignment		X					X	
Ready for Pushback		X			X		X	
Ready to Taxi		X			X		X	
First Navigation Fix		X						X
Gate Hold (as required)		X			X		X	

TABLE 13.1-1. INFORMATION REQUIREMENTS POSITION: GROUND CONTROL (2)

	MODE					GENERATED		
	Pictorial Displ.	Alphanumeric	Indicator	Audible Alarm	Communications	Continuously	Automatically	Selectively
RUNWAY/TAXIWAY								
Active Runways and Taxiways	X					X		
Taxi Routing		X						X
ILS Sterile Areas	X					X		
Obstructions	X					X		
Traffic under Local Control		X			X		X	
GENERAL								
Traffic Flow	X						X	
Status of Gates		X				X		
Vehicular Traffic	X				X		X	
Status of Holding Areas		X			X	X		
Weather Observation		X						X
Weather Forecast		X						X
ATIS Letter and Altimeter Setting		X					X	
ATIS Text		X						X
Time		X					X	
Communications Channels			X			X		
Emergency Information		X	X	X	X		X	X

TABLE 13.1-1. INFORMATION REQUIREMENTS POSITION: CLEARANCE DELIVERY

	MODE					GENERATED		
	Pictorial Displ.	Alphanumeric	Indicator	Audible Alarm	Communications	Continuously	Automatically	Selectively
DEPARTING AIRCRAFT								
ID		X			X			X
Beacon Code		X						X
Clearance Text		X			X			X
Clearance Status		X			X			X
GENERAL								
Departure Routes		X						X
Weather Observation		X						X
Weather Forecast		X						X
ATIS Letter and Altimeter Setting		X					X	
ATIS Text		X						X
Time		X					X	
Communications Channels			X			X		
Gate Holds		X						X
Restrictions		X						X
Emergency Information		X			X		X	X

TABLE 13.1-1. INFORMATION REQUIREMENTS POSITION: FLIGHT DATA

	MODE					GENERATED		
	Pictorial Displ.	Alphanumeric	Indicator	Audible Alarm	Communications	Continuously	Automatically	Selectively
ALL AIRCRAFT								
ID		X			X			X
Clearance Text		X			X			X
Clearance Status		X			X			X
Clearance Requests		X			X			X
GENERAL								
ATIS Letter		X					X	X
ATIS Message Content		X	X		X			X
Weather Observation		X						X
NOTAM's		X			X			X
Runways in Use		X						X
Restrictions		X						X
Communications Channels			X			X		
Weather Instrument Readouts (LAWRS Towers)		X	X					X
Equipment Status		X	X					X
Emergency Information		X		X	X		X	X
Time		X			X		X	X

TABLE 13.1-2. INFORMATION ENTRY AND ACTION REQUIREMENTS POSITION: LOCAL CONTROL (1)

	Alphanumeric	Actuation	Selection	Communications
ALL AIRCRAFT				
Maintains Safe Separation (aloft and on runways)				X
Monitors Location of All Aircraft in Control Area			X	
ARRIVING AIRCRAFT				
Receives Inbound Report				X
Adjusts Aircraft Separation				X
Clears Aircraft to Land				X
Advises Aircraft of Traffic and Position in Sequence				X
Controls Missed Approach (as required)				X
Advises Aircraft of Desired Turnoff (as required)				X
Records Arrival Time	X			
Issues Taxi Instructions (until A/C is clear of runways)				X
Hands Off to Ground Control	X			X
Adjusts Airport Light Intensities (at pilot's request)		X	X	

TABLE 13.1-2. INFORMATION ENTRY AND ACTION REQUIREMENTS POSITION: LOCAL CONTROL (2)

	Alphanumeric	Actuation	Selection	Communications
DEPARTING AIRCRAFT				
Receives Handoff from Ground Control	X			X
Coordinates Runway Crossings with Ground Control				X
Adjusts Sequence of Aircraft (as necessary)	X			X
Advises Aircraft of Local Conditions (as required)				X
Advises Aircraft of Initial Routing				X
Positions Aircraft for Takeoff				X
Clears Aircraft for Takeoff				X
Controls Aborted Takeoff (as required)				X
Hands Off to Departure Control	X			X
Records time of Takeoff	X			
GENERAL				
Monitors and Controls Navaids		X	X	
Monitors and Controls Airport Lighting		X	X	
Coordinates with Supervisor on Selection of Runways				X
Exercises Necessary Control in Emergencies		X	X	X

TABLE 13.1-2. INFORMATION ENTRY AND ACTION REQUIREMENTS POSITION: GROUND CONTROL (1)

	Alphanumeric	Actuation	Selection	Communications
ALL AIRCRAFT ON GROUND				
Issues Taxi Instructions				X
Informs Pilot of Traffic Advisories, Intersection Priorities, etc.				X
Coordinates Runway Crossings with LC				X
Monitors Ground Traffic Flow			X	
Monitors Vehicular Traffic			X	X
Resolves Traffic Conflicts				X
Keeps Critical ILS Areas Sterile (as required)				X
Provides Assistance in Emergencies		X	X	X
ARRIVING AIRCRAFT				
Determines Gate Destination				X
Notifies Pilot of Gate Status				X
Assigns Holding Area (as required)				X
Releases Aircraft from Holding Area				X

TABLE 13.1-2. INFORMATION ENTRY AND ACTION REQUIREMENTS POSITION: GROUND CONTROL (2)

	Alphanumeric	Actuation	Selection	Communications
DEPARTING AIRCRAFT				
Clears for Pushback				X
Clears to Taxi				X
Determines Runway Assignment			X	
Adjusts Sequence of Taxiing Aircraft	X			X
Receives Handoff from Clearance Delivery	X			X
Hands Off to Local Control	X			X
Advises Pilots of Gate Hold, Expected Start Time (as required)				X
Advises Pilots of Weather, Local Data (on request)				X

TABLE 13.1-2. INFORMATION ENTRY AND ACTION REQUIREMENTS POSITION: CLEARANCE DELIVERY

	Alphanumeric	Actuation	Selection	Communications
Reads Clearance to Pilots				X
Records Gate	X			
Records Clearance Delivery	X			
Hands Off Control to Ground Control	X			X
Records Delivery of ATIS, Restrictions, etc.	X			
Advises Pilots of Gate Holds				X
Records for Gate Hold (request time, expected start time, time start approved)	X			

TABLE 13.1-2. INFORMATION ENTRY AND ACTION REQUIREMENTS POSITION: FLIGHT DATA

	Alphanumeric	Actuation	Selection	Communications
Checks Clearances				X
Hands Off Clearances to Clearance Delivery	X			X
Monitors Information Flow			X	
Receives, Relays, or Posts Data	X			X
Prepares and Records ATIS	X	X		X
Records Clearance Verification	X			
Monitors Equipment Status			X	
Copies Clearances (as required)	X			
Replenishes Equipment (paper, ink, etc.)		X		
Enters Local Restriction Data	X			
Checks and Obtains Misssing Clearances			X	X
Obtains Beacon Codes (as required)			X	X
Enters Clearances (as required)	X			
Transmits Status Information to Other Airport Operating Elements				X
Transmits and Receives Emergency Communications				X
Maintains Records (as required)	X			
Activates Emergency Alarm (as required)			X	
Takes Weather Observation (LAWRS towers)	X	X	X	

13.1.3 Derivation of Proposed Configurations

For each of the four generalized tower cab controller positions (Local Control, Ground Control, Clearance Delivery,and Flight Data), a configuration of displays and controls was derived that met the requirements summarized in Tables 13.1-1 and 13.1-2. The information provided by current systems and by proposed MSDP systems was assumed to be available, and voice communication procedures and equipment were assumed to continue unchanged (i.e. this analysis does not assume digital data link).

Some basic principles were used in arriving at the recommended configurations:

1. Provide all the information required at a given time.
2. Suppress all information not required at a given time.
3. Arrange information to minimize the need for processing (integration, correlation, conversion, etc.) by the controller.
4. Minimize the search and retrieval actions required to obtain information.
5. Provide the controller with flexibility in selecting information configurations.
6. Minimize the number of display surfaces and control panels required.
7. Minimize the probability that significant information will be overlooked.

Since some of these principles may be incompatible (1 and 2 vs. 4; 4 vs. 5, or 5 vs. 6, for example), tradeoff evaluations and compromise solutions were necessary. These tradeoffs resulted in some constraints on callup of individual items of information. For example, a single key is proposed for LC to call up all weather data for all locations within an area rather than individual keys for such items as wind or visibility data on a specific runway. A single audible alarm is proposed for all emergencies, paired with a blinking symbol or indicator to show the nature of the

emergency, and a suppress key is provided for the alarm. Several different types of alarm might be substituted.

The proposed configurations for each position are described and discussed in more detail in the following sections.

13.2 LOCAL CONTROL POSITION

13.2.1 Displays

Essentially the LC must maintain safe separation of aircraft, both airborne and on the ground, within an area of control. Much of the information needed by the LC, then, involves the relative positions and movement of identified aircraft. A map-like display of ID, position, and movement of aircraft was thus considered a primary requirement. Some additional information was considered so critical that it should be continuously displayed. Some information was considered critical at times, but unnecessary (and therefore a form of clutter) at other times; this information was classified as selective. (See Table 13.2-1).

The analyses summarized in Table 13.1-1 led to a proposed configuration involving four major display areas or surfaces:

I. Area Pictorial - pictorial and alphanumeric

II. Airport Pictorial - pictorial and alphanumeric

III. Information Text - alphanumeric

IV. Auxiliary display - indicators

The contents and nature of these proposed display areas are summarized in Table 13.2-1.

13.2.2 Controls

In a similar fashion, the analyses summarized in Table 13.1-2 led to a proposed configuration of four control panel areas:

V. Pictorial displays - select

TABLE 13.2-1. LOCAL CONTROL DISPLAY REQUIREMENTS

I. Area Pictorial-Airport Centered, Scale Selective		
Content	Origin	Nature
Runways, landmarks	P	Map
Approach/departure routes	E	Map
Navaid systems	E	Alphanumeric
Aircraft in area-plan location	A	Symbols
ACID for A/C under own control	A	Tag, leader
Altitude for A/C under own control	A	Tag
ACID, altitude for all A/C	S	Tag, leader (quick-look)
Weather hazard warning	A	Symbol, blink, audible alarm
A/C hazard warning (MSAW,TCA)	A	Tag alphanumeric, blink, audible alarm
Time, ATIS letter, alt. setting	A	Alphanumeric
Arrival sequence, time to touch down	S	Alphanumeric listing
Departure sequence	S	Alphanumeric listing

Origin Symbols

P = Permanent
E = Entered (Keyboard entries setup and left)
A = Automatically entered
S = Selected (Controller selects with special pushbuttons or touch panels.)

TABLE 13.2-1. LOCAL CONTROL DISPLAY REQUIREMENTS (CONTINUED)

II. Airport Pictorial-Fixed Scale		
A. Continuously Displayed		
Content	Origin	Nature
Runways	P	Map
Runway identification	P	Alphanumeric
Approach/departure routes	E	Map
All A/C	A	Symbol at location (may be radar return)
ACID, alt, weight for A/C under own control	A	Tag, leader
Runway status (restrictions, assigned)	E	Letters with ID
Weather hazard warning	A	Symbol, blink, audible alarm
Time, ATIS letter, altimeter setting	A	Alphanumeric
B. Weather Selective - (One Button)		
Runway winds		Symbols and digits at locations
Runway VAS criteria		Digits at locations
WVAS vortex location		Symbol at location
Wind shear line, direction, speed		Symbol, digits, at location
RVR, RVV		Alphanumeric at location
Latest weather observation		Alphanumeric in available space
C. NAVAIDS Selective - (One button)		
NAVAIDS available		Alphanumeric at location
NAVAIDS in operation		Added symbol
NAVAIDS out of service		Added symbol
D. Taxiways Selective - (One button)		
Taxiways		Map
Taxiway identification		Symbol or letter
Taxiway status		Symbol or letter
A/C gate or runway assignments		Symbol added to A/C data tag

TABLE 13.2-1. LOCAL CONTROL DISPLAY REQUIREMENTS (CONTINUED)

II. Airport Pictorial (Continued)	
E. Quick-Look Selective (One button for both I and II)	
Content	Nature
ACID for all A/C	Tag, leader
Controller	Symbol on tag
F. Listings Selective (One button for both I and II)	
Arrival sequence, time to touch down	Alphanumeric listing
Departure sequence	Alphanumeric listing
III. Information Text	
All features proposed for TIPS at LC position.	
In addition:	
Full text of ATIS should be displayed on request.	
Full test of latest local and satellite weather observations should be displayed on request, to include VAS, WVAS, and wind shear information.	
Full text of latest terminal weather forecast should be displayed on request.	
IV. Auxiliary Display	
Field lighting status - indicator lights on map	
NAVAIDS status - indicator lights	
V. Audible Alarms	
Aircraft hazard	Same alarm for all. Suppressed when any appropriate switch or button action is taken.
Weather hazard	
Light status	
Emergency warning	

VI. Alphanumeric keyboard

VII. Display adjustments

VIII. Auxiliary panels.

The nature of these controls is summarized in Table 13.2-2. Figures 13.2-1, 13.2-2 and 13.2-3 illustrate the use of the V keys to select various data configurations on display II.

13.2.3 Arrangement

Considering the LC standing at the center of his designated area, and looking out the window, displays I and II should be closest to his line of sight. Display II could be slightly below line of sight. Displays I and II differ primarily in scale (and thus ability to depict details of runways and taxiways). If they could be used alternatively, they could be combined on the display II device with a scale-select callup. However, current operational use of ASR and ASDE BRITE's suggests that LC will generally want both scales available at the same time. Therefore, suspending display I above the line of sight as in current practice is proposed. The surface of display III should be beside, and in the same plane as, display II, to minimize eye movement and accommodation between the two. The select keys (V) should be directly under display II; likewise the keyboard and PEM (VI) should be directly under display III. Location of the display adjustments panel is less critical, but it should be easily reached from the central LC position. Any additional space adjacent to displays II and III should be allocated to communications equipment. The auxiliary display and controls (IV and VII) need not be within immediate reach of LC, since they are operated less frequently than the other elements. They could be located beside and beyond the communications or the display adjustment areas, or on an island console behind the controller.

TABLE 13.2-2. LOCAL CONTROL REQUIREMENTS FOR CONTROLS

V. Pictorial Displays - Select		
FUNCTION	NATURE	DISPLAY
Select weather (WX)	Double-action button	II
Select NAVAIDS (N)	Double-action button	II
Select taxiways (T)	Double-action button	II
Select quick-look (Q)	Double-action button	II
Select listings (L)	Double-action button	II
Suppress alarm	Single-action button	II
Select scale, brightness, contrast	Rotary switches	I

VI. Alphanumeric Keyboard

Function

Select alphanumeric information displays (as in TIPS, ARTS)
Actuate handoff (as in TIPS)
Record arrival and departure times (modification to TIPS)
Input information (resequence, cancel, missed approach) (as in TIPS)
Request printout (modification to TIPS).
Set up data for pictorial displays (runway assignment, status information, routing maps, etc.) (modification to ARTS).
Position cursor on I or II (PEM, as in ARTS)

VII. Display Adjustments	
Function	Nature
Select display to be adjusted	Pushbuttons
Adjust brightness	Rotary switch
Adjust contrast	Rotary switch
Adjust panel lighting brightness	Rotary switch

VIII. Auxiliary Panel	
Function	Nature
Actuate NAVAIDS	Pushbutton array
Control Airport Lighting	MIMIC Panel[3]

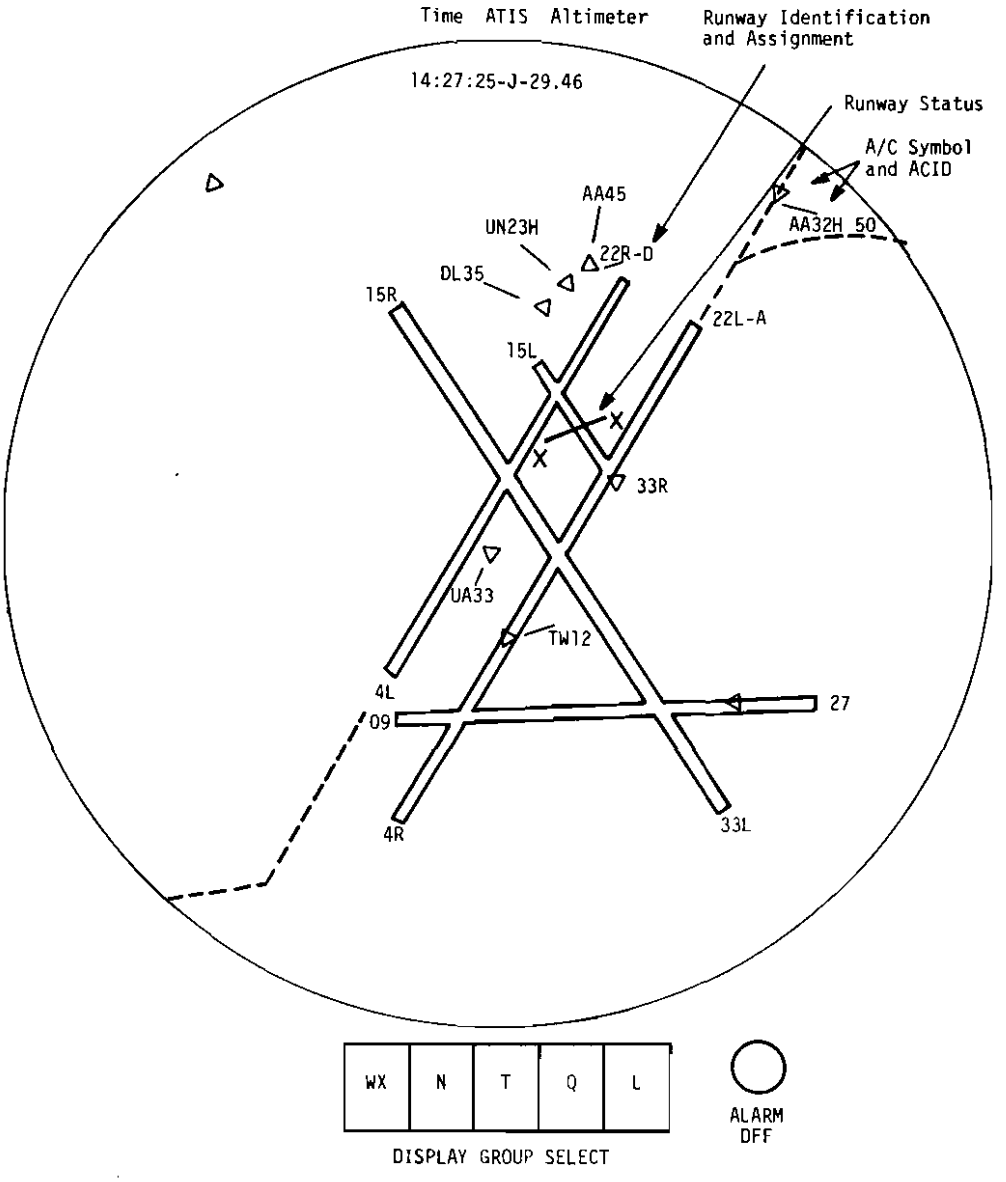

FIGURE 13.2-1 II-A BASIC

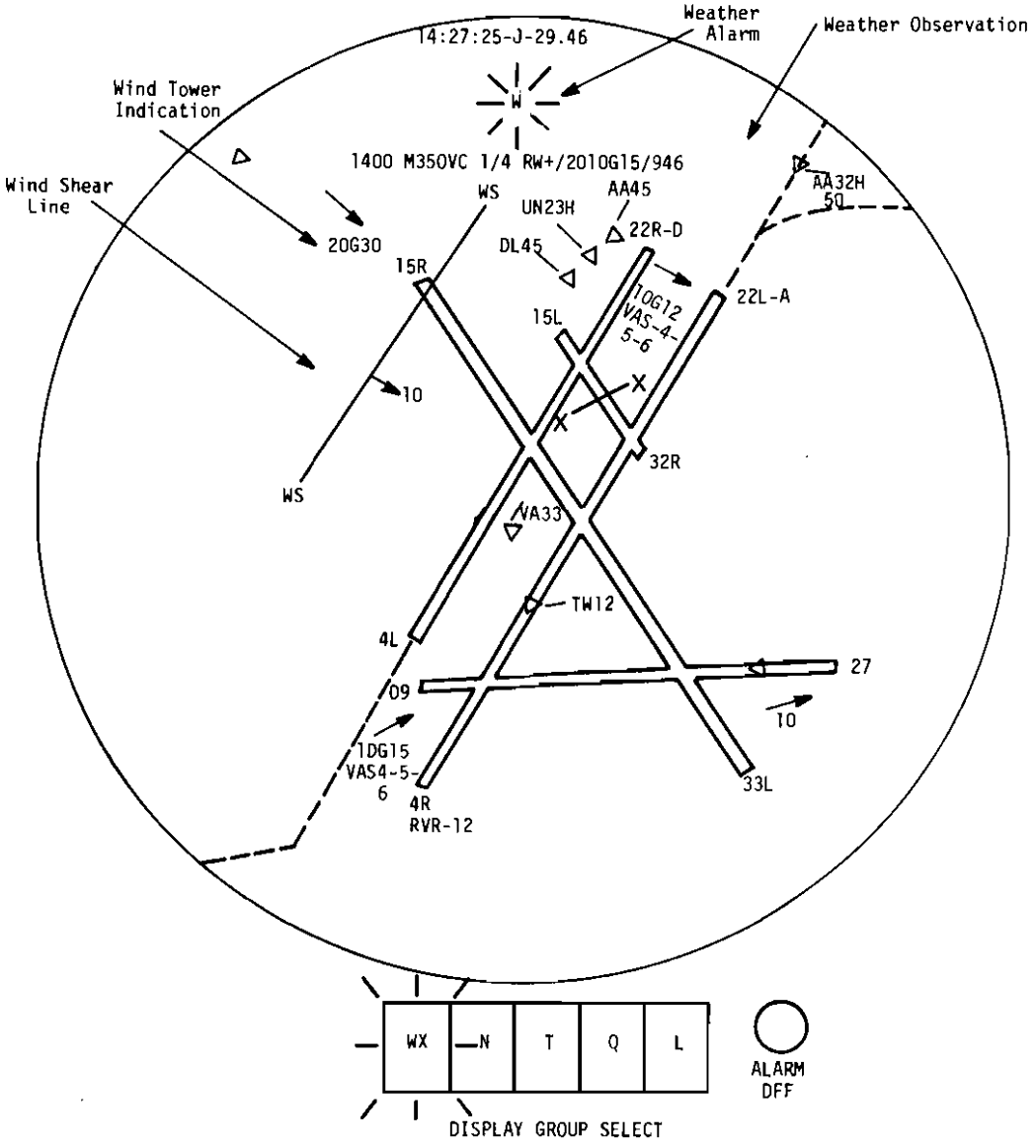

FIGURE 13.2-2. II-B WEATHER

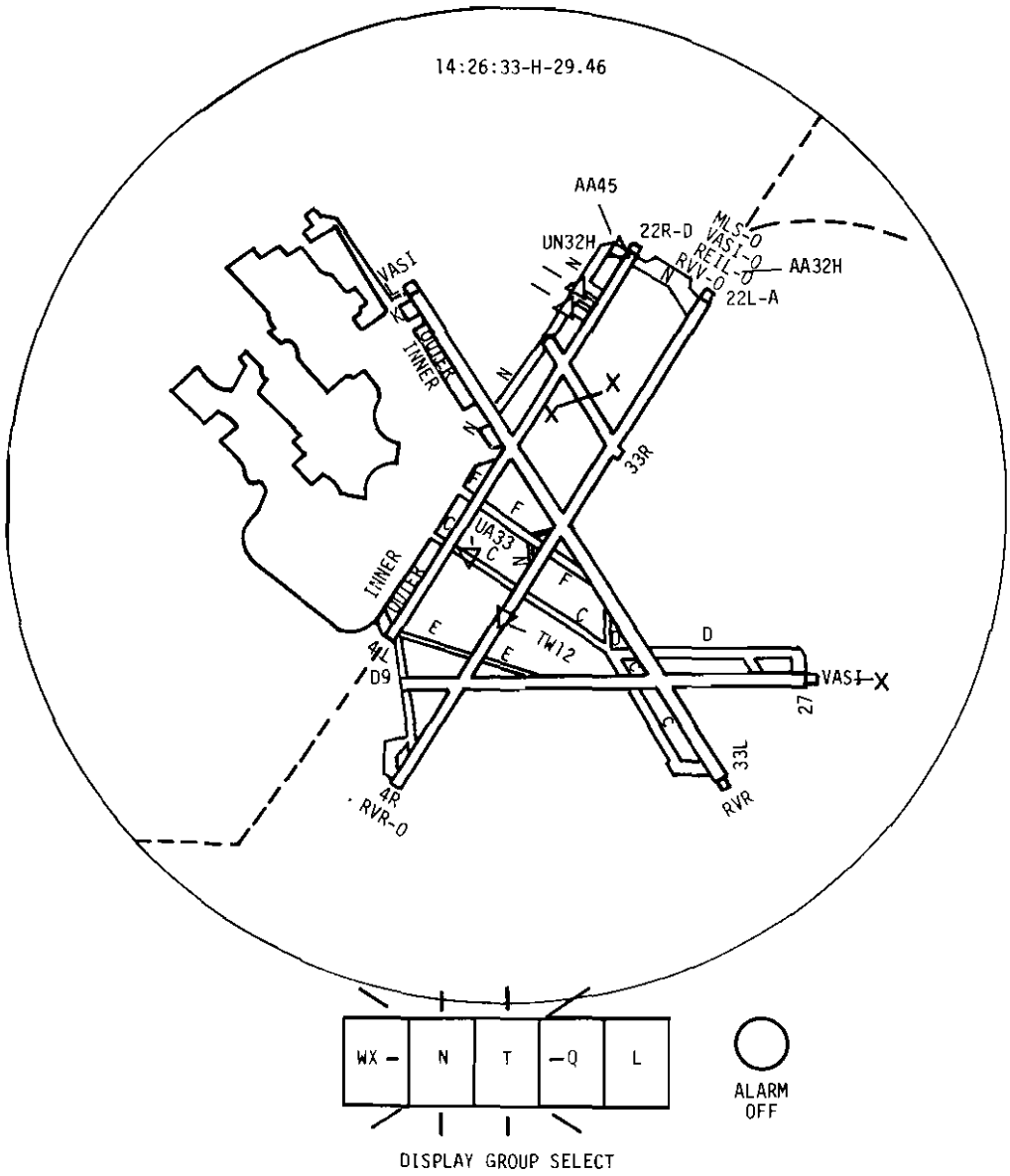

FIGURE 13.2-3. II-C&D NAVAIDS AND TAXIWAYS

A possible configuration of these elements, arranged in the NAFEC console,[1] is illustrated in Figure 13.2-4.

13.3 GROUND CONTROL

Ground Control (GC) display and control requirements have been well worked out in the TAGS program. In the idealized cab, the GC position would look like the LC position (Figure 13.2-4) minus display I and panel IV/VIII. The select functions for display II (panel V) would not require Navaids and Taxiways (Taxiways should be continuously displayed for GC, as should all aircraft under GC control). Perhaps buttons could be added to select only arriving or departing aircraft. Alphanumeric formats for GC are adequately planned in the TIPS program. Gate Hold should be indicated by a blinking symbol on display II.

13.4 CLEARANCE DELIVERY

CD would require only display III and keyboard VI with the communications panel. Format requirements for CD are well worked out in the TIPS program.

13.5 FLIGHT DATA

FD would require display III and keyboard VI with the communications panel. The 'Enter Weather Data' function now assigned in TIPS to the Input-Output Terminal (IOT) should be made at least optional at the FD position since he frequently is given responsibility for that kind of activity (see Section 4.4.5). If information from VAS, WVAS, Wind Shear or other systems becomes available through TIPS then further development of display formats will be required.

Figure 13.5-1 shows a possible arrangement for the CD or FD position.

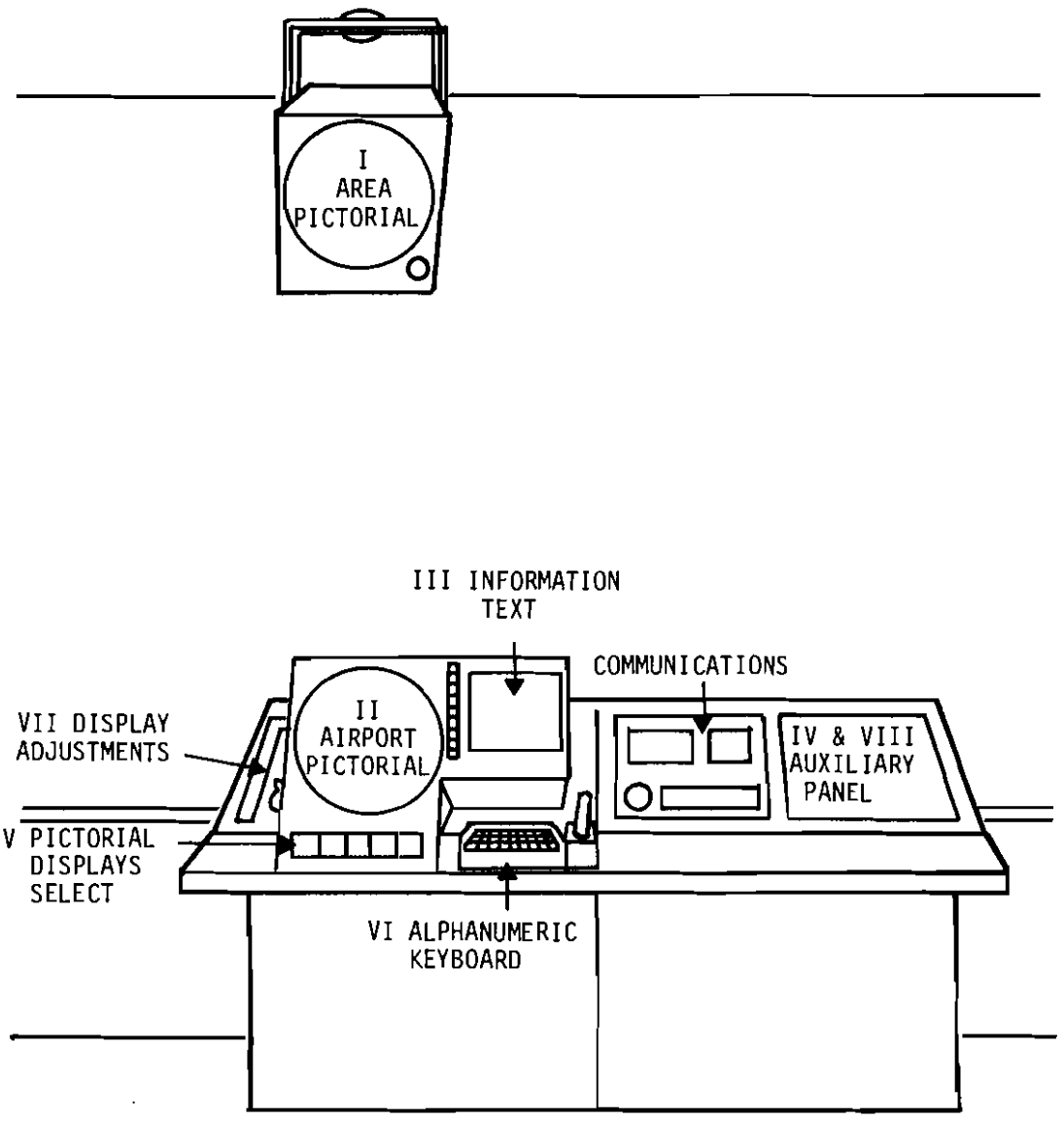

FIGURE 13.2-4. POSSIBLE ARRANGEMENT OF IDEALIZED LOCAL CONTROL POSITION

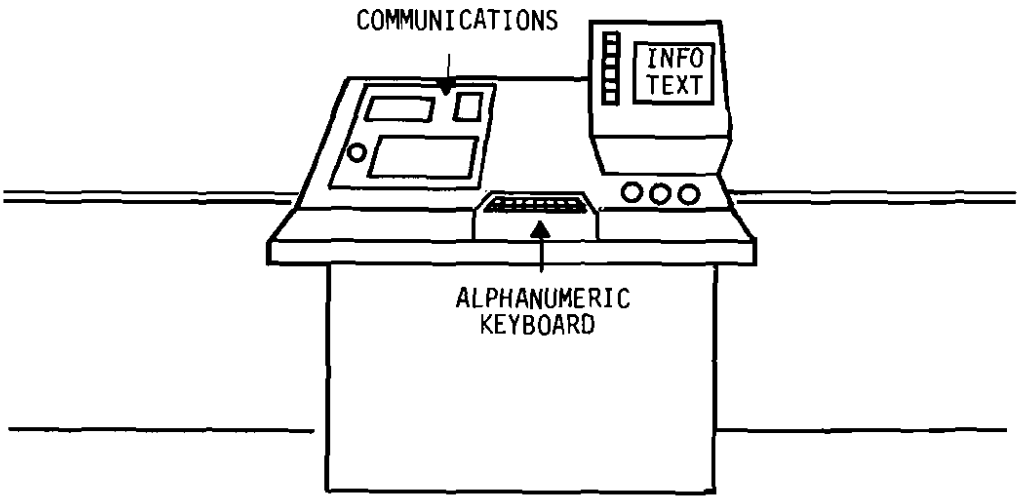

FIGURE 13.5-1 POSSIBLE ARRANGEMENT OF IDEALIZED CLEARANCE DELIVERY OR FLIGHT DATA POSITION

13.6 SYNTHESIS FROM MSDP ELEMENTS

The primary impact of MSPDs is on the LC position, where information from such systems as VAS, WVAS, and Wind Shear must be integrated and disseminated. Therefore, in the idealized design, great emphasis has been placed on including such data in symbolic form on map-like presentations. If wind information is sensed, it should be shown at the sensor location. Similarly status information should be shown where it applies -- on or near the runways and taxiways. The proposed configurations generally do not call for information other than that planned for the near future. Similarly, the proposed display devices could be implemented with existing (BRITE) or planned (TIPS) devices. Also, current arrangement of equipment was considered in determining the proposed arrangement.

Special note should be made of the proposed "quick entry" capability of TIPS, using a touch-sensitive display face. This feature is particularly valuable in minimizing the number and complexity of keying operations required for data retrieval. The feasibility of using this capability as an alternative to keyboard, trackball or joystick cursor controls wherever applicable should be explored.

Since a limited deployment of TAGS is planned, the Airport Pictorial (II) display at the LC and GC positions in many towers must be approximated from other MSDP elements. The principal loss (the basic feature of TAGS) will be the data tags associated with aircraft symbols or returns, because there will be no beacon system for tracking aircraft on the ground. The other data for display II will be in the system. The best candidate for the pictorial data will be the ASDE information on a BRITE (or equivalent) device. Superposition of much of the symbolic data might be accomplished in the same way that ARTS alphanumeric data are superimposed on today's ASR BRITE displays. Registration of meteorological data might be assisted by installing radar reflectors or beacons on the meteorological towers.

13.7 HUMAN FACTORS SUMMARY DISCUSSION

The proposals for an idealized layout are aimed primarily at moving information now displayed via a variety of dials and indicators onto two or three display surfaces, adding information from new sensors, and grouping the information in forms matching controllers' needs, while minimizing the effort required to retrieve the information. This approach may raise problems of software preparation and system interface redesign. It may be necessary that the sensed information from MSDP elements (old and new) be centrally processed and then sent to the appropriate display devices, thus adding requirements for combining the processing powers and output interfaces of TIPS, TAGS, and ARTS. The challenge, then, is to eliminate the space-taking indicators now in use (wind, altimeter, clock, etc.), avoiding adding any new display devices from new elements, and put all the information in a few surfaces in the most usable form.

13.8 FEASIBILITY ANALYSIS AND INTERFACE ISSUES

13.8.1 Operational Considerations

The idealized stations proposed in this section are large by today's standards. The proposed consoles are 45 inches in length; and in this study, controllers were allocated the following counter space for their individual stations:

- Local Control - 2 consoles or 7.5 ft.
- Ground Controls - 1.5 consoles or 5.6 ft.
- Clearance Delivery - 1 console or 3.8 ft.
- Flight Data - 1 console or 3.8 ft.

These stations are based on a NAFEC design which was the result of a program to develop tower cab operator consoles for high activity airports. The NAFEC program developed their station design in a tower cab mockup with 525 square feet of floor space.

As seen from Table 12.4-2, few current towers can equal this floor area and some class B tower cabs have less than half this area available. Elongated controller stations will tend to:

- o Increase the pressure for space at those tower cabs already experiencing space limitation problems, and
- o Accentuate controller line of sight problems, particularly at those towers located to the side of their respective airports, by spreading the controllers around the cab away from the favorable viewing locations.

If an analysis of tower cab spatial and line-of-sight requirements indicates that shorter stations are needed, two alternatives are:

- o Remove the Airport Pictorial Display from the console and hang it from the ceiling, or
- o As with the station's single integrated keyboard and its display control unit, physically integrate the two large console mounted displays (i.e., Airport Pictorial and Information Text Displays) into a single display unit.

In terms of today's MSDPs (i.e., TAGS, TIPS, and BRITE), the idealized station concept developed in this section proposes the following integration for Class A equipped tower cabs:

- o Consolidation of the BRITE, TIPS, and TAGS keyboards into a single unit.
- o Consolidation of the BRITE and TAGS display control units into a single unit.
- o Expansion of the TAGS presentation capability to include the ability to provide a variety of information formats on a quick look basis.

Class B equipped control towers could also qualify for the two latter options if the ASDE display were modified to present lists of alphanumeric and symbolic information. Conceptually, the only difference that need exist between a TAGS and an ASDE presentation

is that the TAGS presentation can associate its computer generated data to the actual positions of the targets on the display face. ASDE-3 is to be an analog and not a digitized radar and, therefore, cannot perform such target association.

Of the above integration options associated with this station concept, two have been singled out for discussion in the following subsections:

- The feasibility of integrating the TIPS and ASTC displays (i.e., either TAGS or ASDE) into a single display unit, and
- The integration of the BRITE, TIPS, and TAGS keyboards into a single keyboard unit.

13.8.1.1 Feasibility of a TIPS/ASTC Display Integration - The ASDE-3 display will be the NUBRITE TV display. This display was recently developed for ASDE-3 and is currently operating on three ASDE-2's (JFK, ORD, and SFO). It is described in Appendix A.2.3 If TAGS is to be a hybrid system employing ASDE-3, it too will use the NUBRITE TV display.

The TIPS display has not yet been developed. It may be a TV display as have been the units tested to date at NAFEC. If it is to be a TV display, the potential integration of the ASTC and TIPS TV displays into a single TV display may be considered. However, without benefit of detailed analysis, this possibility does not appear promising for the two most likely options based upon the following rationale.

Option 1 - Specify that the TIPS display permit its use to view ASDE-3/TAGS during bad cab visibility conditions (i.e., about two percent of the time, see Table 13.8-1). This option does not look feasible for the following reasons.

(1) The high resolution requirements associated with the ASTC system are quite severe. These requirements motivated the recent NUBRITE system development program (estimated cost of $500,000) and resulted in a very expensive display (approximately

TABLE 13.8-1. TIME IN POOR CAB VISIBILITY FOR ASTC SITES WITH ANNUAL OPERATIONS OVER 300,000

AIRPORT IDENTITY NAME & LOCATION		CY 1975 ITINERANT OPERATIONS (THOUSANDS)	PERCENT* TIME IN POOR CAB VISIBILITY
ORD	Chicago O'Hare	690	1.7
ATL	Atlanta Intl.	471	4.1
LAX	Los Angeles Intl.	454	3.1
JFK	J.F. Kennedy Intl.	341	3.1
DEN	Denver Stapleton	372	1.0
DFW	Dallas Ft. Worth	345	1.2
LGA	LaGuardia	331	2.4
SFO	San Francisco	330	1.1
STL	St. Louis Intl.	322	1.5
MIA	Miami Intl.	315	0.3
DCA	Washington DC	309	1.2
PHL	Philadelphia Intl.	307	2.2
		Average	1.9

*Visibility <400 feet and/or 1 mile between 0700 and and 2100 hours - local time.

ten times the price of a standard TV monitor). Levying these requirements on the TIPS display when only 27 of the 89 TIPS sites would use them would be of questionable benefit. Clearance Delivery and Flight Data would never use the surveillance feature and an extended TIPS deployment (e.g., to all ARTS sites) would further aggravate the problem.

(2) The information content of ASTC and TIPS displays is for the most part exclusive and is by nature different. ASTC displays are pictorial plan view displays showing the airport map and target location. TIPS displays are text displays listing flight data information. The only common information is that TAGS and TIPS both indicate the identity of aircraft under control. Since the information is exclusive and quite different in nature, it is unlikely that an integrated display will take up any less space than the two individual displays unless the display area is time shared. The one possible combined concept, that of adding flight data to the TAGS data blocks, has been judged unacceptable based upon simulation evaluations. (The added alphanumerics tend to compromise target detection). The possibility does exist that acceptable ASDE-3/TAGS performance might be provided if the flight data, in list format for ASDE-3 and either list or in data blocks for TAGS, were displayed in a "quick look" mode. However, this mode would severely compromise the TIPS functions.

Option 2 - Specify that TIPS utilize the NUBRITE TV display at sites so equipped. This option exhibits problem (2) above. In addition, the TIPS concept uses the "quick action" data entry feature to provide the flexibility required for data manipulation and retrieval. The TIPS display will, therefore, require data entry as an integral part of the display. The NUBRITE system does not provide this feature and would severely compromise the TIPS usefulness.

13.8.1.2 Integration of the TAGS/TIPS/ARTS Keyboards - Analysis in Section 14 indicates that the keyboard entry devices required by TAGS, TIPS, and the BRITE Alphanumeric Equipment should be

integrated. To examine the extent of the integration requirement, the keyboard combinations which will be required when the systems are deployed are estimated in Table 13.8-2. From this table, it is seen that the majority of the TIPS and ARTS keyboards will be used individually. However, at least 79 keyboards will be used in combinations, 71 of which are the TIPS/ARTS combination. This number and the cab space limitations discussed in Section 14, may be adequate to justify a keyboard integration effort.

In integrating the various keyboards, many design considerations and trade-offs must be made. Since the majority of keyboards do not need to be used in combination, at least the existing ARTS keyboards will be used individually, without integration. The addition of integrated keyboard combinations will, therefore, result in a family of keyboards. Each keyboard must provide the functions unambiguously without confusion as the controllers rotate through the various cab positions and each chassis should be as small as possible to save space. Satisfaction of these requirements will require decisions regarding key arrangement and chassis configuration.

A complete system design would require considerable time and effort. Many alternatives will have to be considered. Such a complete study was not conducted here due to resource limitations. However, one alternative was considered in some detail to examine the basic feasibility of integration. The design approach would minimize the operational impact of the set of keyboards on the existing ARTS keyboard. The keyboards would be modular in nature and based upon the ARTS keyboard.

In conducting the preliminary modular keyboard design, the functions required by each keyboard had to be defined. The information was drawn from Sections 7 and 8 for TAGS and TIPS respectively and the ARTS III Air Traffic Training Manual[2] for the BRITE (ARTS) keyboard. The individual keyboards for each system will have:

1. The capitalized alphabet
2. The numbers 0-9

TABLE 13.8-2. ESTIMATED DEPLOYMENT OF MSDP KEYBOARDS IN TERMS OF CAB CONTROLLER STATIONS

CAB EQUIPMENT CLASS	MSDP KEYBOARDS IN CLASS	NUMBER OF AIRPORTS IN CLASS	TYPE OF CONTROLLER STATION KEYBOARD: TAGS/TIPS/ARTS		TAGS/TIPS		TIPS/ARTS		TIPS		ARTS		NONE
			CONT. POS.	EST.*1 DEPLOYMT.	CONT. POS.	EST.*1 DEPLOYMT.	CONT. POS.	EST.*1 DEPLOYMT.	CONT. POS.	EST.*1 DEPLOYMT.	CONT. POS.	EST.*1 DEPLOYMT.	CONT. POS.
A	TIPS, ARTS, TAGS	4	LC	4	GC	4			CD,FD	8			
B&C	TIPS, ARTS	71					LC	71	GC CD,FD	213			
D	TIPS	14							LC,GC CD,FD	56			
E&F	ARTS	85									LC	85	GC CD,FD
G	NONE	240											LC,GC CD,FD
TOTAL EST. DEPLOYMENTS*1				4		4		71		277		85	

NOTES

*1 Low estimates since multiple controller positions not counted.

3. "Display Preview Area" control keys - presented in Table 13.8-3.

4. Special symbols - presented in Table 13.8-4 for ARTS and Table 18.3-5 for TIPS. At present, TAGS has no plans for including special symbols on its keyboard.

5. Function keys - presented in Table 13.8-6 for ARTS, Table 13.8-7 for TIPS, and Table 13.8-8 for TAGS.

The ARTS keyboard is shown in Figure 13.8-1 and is the unit which would continue to be used at the Class E and F equipped tower cabs. The arrangement of keys would be kept as it is today. To this basic keyboard, modules could be attached to expand the keyboard capability to include both TIPS and TAGS features. There would be one module for each of the two systems.

The TIPS keyboard module is presented in Figure 13-8-2. The TIPS keyboard functions are expected to differ by control position so there are three variations of the TIPS module - one for each type of cab position. Figure 13.8-3 presents the free standing version of the integrated TIPS/ARTS keyboard. The TIPS module is attached to the ARTS/Basic keyboard and the electrical output from the ARTS unit is input to the TIPS module. Two sets of electrical outputs come from the module - one set to the TIPS computer and the other set to the ARTS computer. The TIPS module contains:

- A TIPS mode select key plus a light to indicate when the keyboard is in the TIPS mode as opposed to the ARTS mode.
- The set of TIPS special symbols.
- The set of TIPS function keys.
- Two of the six TIPS control keys.

To save space the TIPS module does not contain either the alphanumeric keys or the basic set of four control keys which TIPS and ARTS have in common.

TABLE 13.8-3. PRELIMINARY LIST OF THE KEYBOARD CONTROL KEYS FOR ARTS, TAGS, AND TIPS

ARTS	TAGS	TIPS
CLEAR	CLEAR	CLEAR
BACKSPACE	BACKSPACE	BACKSPACE
SPACE	SPACE	SPACE
ENTER	ENTER	ENTER
		CARRIAGE RETURN LINE FEEDER

TABLE 13.8-4. LIST OF ARTS KEYBOARD FUNCTIONS[2]

KEYBOARD SYMBOLS	KEY CODE
1) Plus Sign	+
2) Period	.
3) Slant	/
4) Asterisk	*
5) Arrow, Up	↑
6) Arrow, Down	↓
7) Arrow, Left	←
8) Arrow, Right	→
9) Arrow, Up Left	↖
10) Arrow, Up Right	↗
11) Arrow, Down Left	↙
12) Arrow, Down Right	↘
13) Delta	Δ

TABLE 13.8-5. PRELIMINARY LIST OF SPECIAL TIPS KEYBOARD SYMBOLS

KEYBOARD SYMBOLS	KEY CODE
1) Plus Sign	+
2) Comma	,
3) Hyphen	-
4) Period	.
5) Slant	/
6) Asterisk	*
7) Ampersand	&
8) Number Sign	#
9) Arrow, Up	↑
10) Arrow, Down	↓
11) Arrow, Left	←
12) Arrow, Right	→

TABLE 13.8-6. LIST OF ARTS KEYBOARD FUNCTIONS[2]

KEYBOARD FUNCTIONS *	KEY CODE
1. TRACK START	TRK START
2. TRACK REPOSITION	TRK REPOS
3. TRACK SUSPEND	TRK SUSP
4. TRACK DROP	TRK DROP
5. HAND OFF	HANDOFF
6. ENTER FLIGHT DATA	FLT DATA
7. MULTIPLE FUNCTION	MULTI FUNC
8. SPARE KEY	F8
. . .	. . .
16. SPARE KEY	F16
17. REQUEST IFR BEACON CODE	IFR
18. REQUEST VFR BEACON CODE	VFR
19. BEACON CODE MANIPULATION/READOUT	BCN
20. CONTROL STATION ASSIGNMENT	CFG
21. TRACK FORMAT MANIPULATION	DIS
22. EMERGENCY FORMAT	EMG
23. FILTER LIMIT MANIPULATION/READOUT	FIL
24. MODIFY LEADER OFFSET DIRECTION	LDR
25. MODIFY DATA FIELD FORMATS	MOD
26. SELECT/INHIBIT AUTO-OFFSET	OFF
27. RELOCATE PREVIEW AREA	PRE
28. RELOCATE SYSTEM DATA AREA	SYS
29. RELOCATE VARIOUS LISTS	TAB

NOTE

* Abbreviated statement of functions.

TABLE 13.8-7. PRELIMINARY LIST OF TIPS KEYBOARD FUNCTIONS

KEYBOARD FUNCTIONS*	KEY CODE
1. Enter IFR Flight Plan	IFR FP
2. Enter VFR Flight Plan	VFR FP
3. Amend IFR Flight Plan	IFR AM
4. Amend VFR Flight Plan	VFR AM
5. Flight Plan Readout	REQ FP
6. Cancel Flight Plan	CAN
7. Departure Delay Status	DELAY
8. Enter Weather Data	WTHR
9. Enter Airport Status Data	STATUS
10. Modify Display Organization	LIST
11. Runway/Aircraft Reassignment	RWY
12. Transfer to Ground Control	XGC
13. Transfer to Local Control	XLC
14. Transfer for Clearance Delivery	XCD
15. Change Displayed Aircraft Hold Status	HLD
16. Conduct Internal Communications Test	TEST
17. Multiple Function	MULTI FUNC

NOTE

* Based on Section 8.

TABLE 13.8-8. PRELIMINARY LIST OF TAGS KEYBOARD FUNCTIONS

KEYBOARD FUNCTIONS*	KEY CODE
1.) TRACK START**	TRK START
2.) TRACK REPOSITION**	TRK REPOS
3.) TRACK DROP**	TRK DROP
4.) SELECT/INPUT SCHEME LIMITING TAGGED TARGETS	CLASS
5.) INPUT MAP COORDINATE (TO DEFINE GEOGRAPHIC AREAS LISTED IN SCHEMES TO LIMIT TAGGED TARGETS)	COORD
6.) TAG START***	TAG START
7.) TAG DROP***	TAG DROP
8.) DELETE ALL LEADERS	LDR DLT
9.) SELECT ALTERNATIVE TAG DIRECTIONS BY AIRCRAFT CLASS/GEOGRAPHIC AREA	TAG DIR
10.) INPUT LIST LOCATION	LIST LOC
11.) SELECT LIST TO BE DISPLAYED	LIST CALL
12.) MULTIPLE FUNCTION	MULTI FUNC

NOTES

* Based on Section 7.

** This function is intended to provide manual track control on those occasions the set of tracking algorithms proves too slow.

***Similarly, this function is intended to provide manual tag control on those occasions the set of tagging algorithms proves too slow or inappropriate.

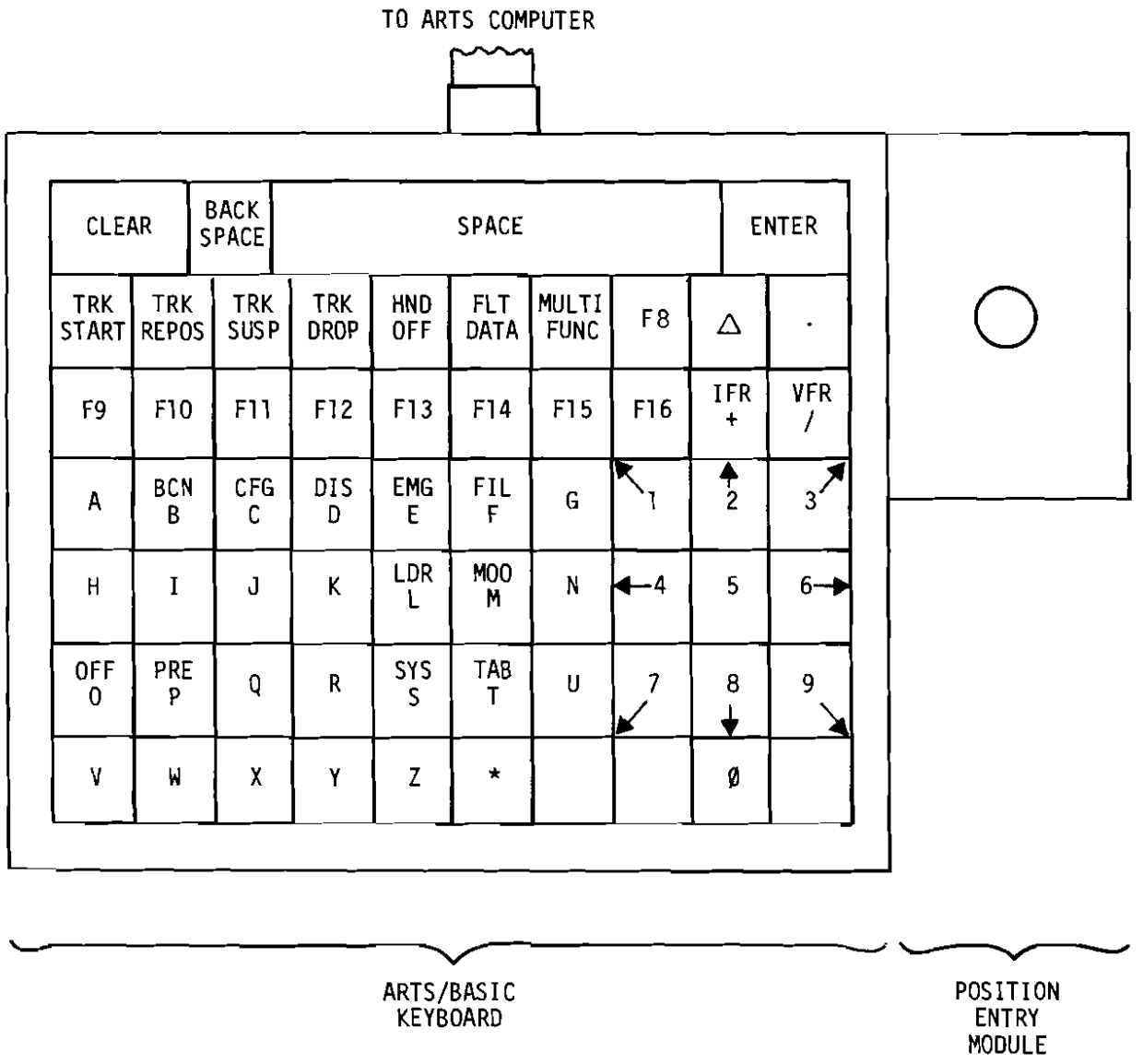

FIGURE 13.8-1. ARTS/BASIC KEYBOARD WITH PEM[2]

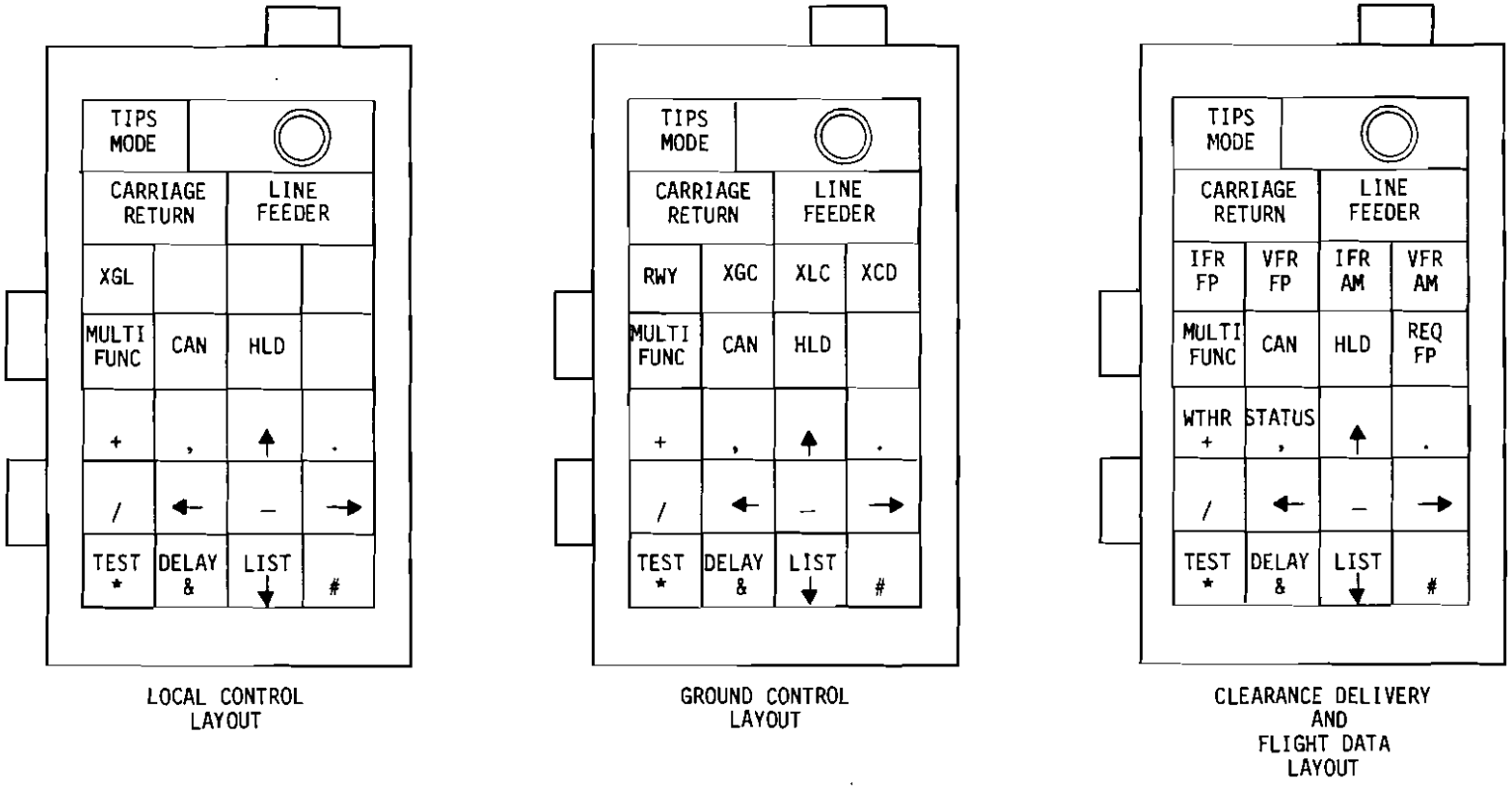

FIGURE 13.8-2. KEY LAYOUT FOR TIPS KEYBOARD MODULE FOR VARIOUS CONTROL POSITIONS

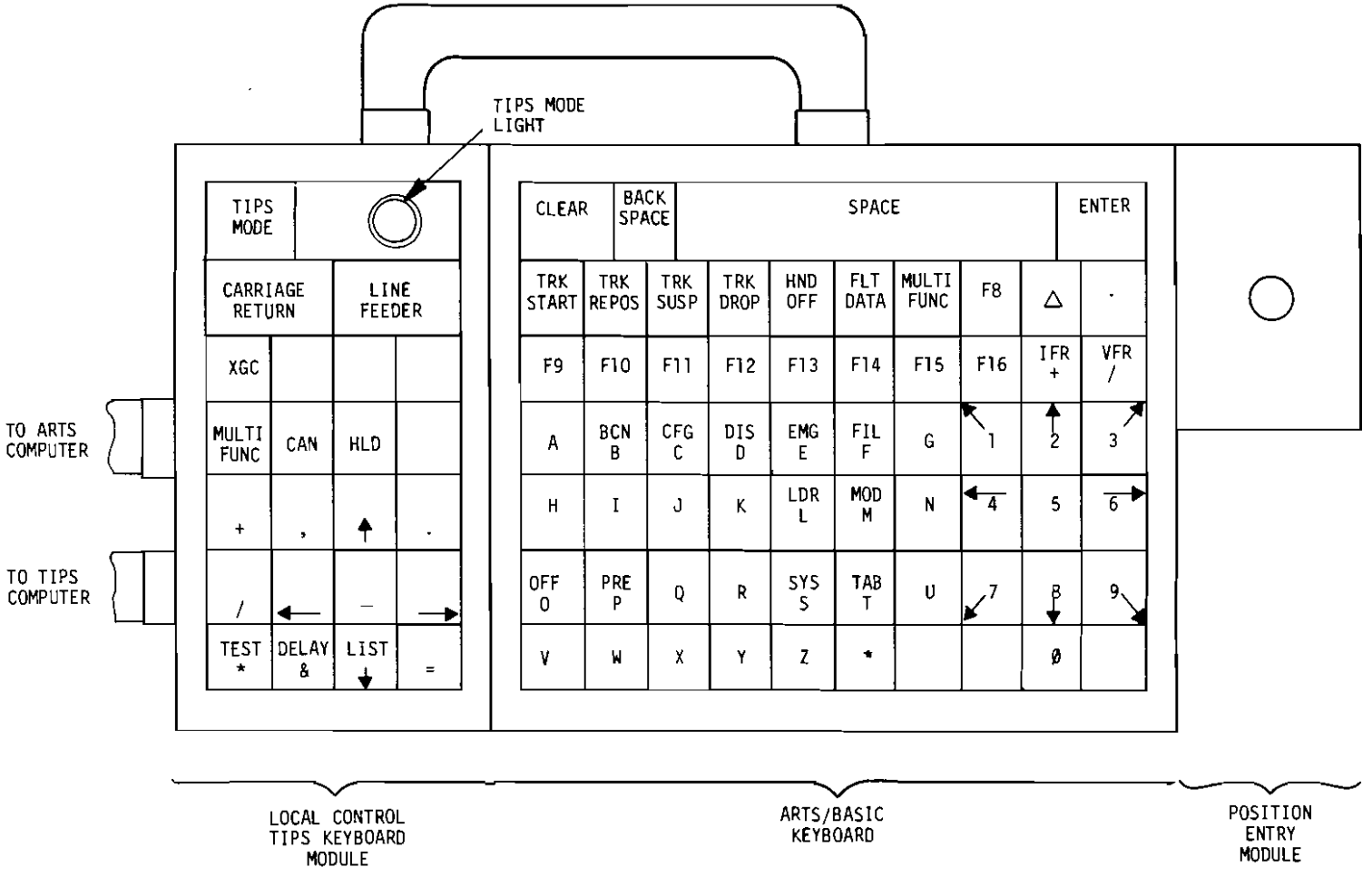

FIGURE 13.8-3. INTEGRATED TIPS/ARTS KEYBOARD

To put the overall keyboard into the TIPS mode, the TIPS mode select key would be depressed on the TIPS module. The TIPS mode light would then turn "on" and the controller would be able to address the TIPS computer by means of the keys on the TIPS module used in conjunction with the alphanumeric and control keys on the ARTS/Basic keyboard. Depressing the TIPS mode select key once again would turn the TIPS mode light "off" and would return the integrated keyboard to its original state. The controller would then be able to address the ARTS computer by means of the ARTS/ Basic keyboard.

Of the five required keyboard combinations presented in Table 13.8-2, this keyboard would be used for both the TIPS/ARTS and the TIPS only combinations. In the TIPS only configuration, the keyboard would always be in the TIPS mode and the keyboard output to an ARTS computer would be unconnected. The keyboard would have an extensive deployment which would include Class A, B, C, and D tower cabs.

To provide a TAGS capability to the keyboard, a TAGS module is added to the integrated TIPS/ARTS keyboard, Figure 13.8-4. The TAGS module would appear and function in a manner similar to that described for the TIPS module. The TIPS/ARTS portion of the keyboard would operate as described in the previous paragraphs. To put the overall keyboard into the TAGS mode from either the TIPS or ARTS mode, the TAGS mode select key would be depressed. The TAGS mode light would then turn "on" and the controller would be able to address the TAGS computer by means of the keys on the TAGS module used in conjunction with the alphanumeric and control keys on the ARTS/Basic keyboard. To switch from the TAGS to the TIPS mode, the TIPS mode select key would be depressed; and to switch from the TAGS to the ARTS mode, the TAGS mode select key would be depressed for a second time. This keyboard switching logic is summarized in Table 13.1-8.

This keyboard would be used for both the TAGS/TIPS/ARTS and TAGS/TIPS keyboard combinations called out in Table 13.8-9. The keyboard would have a small deployment restricted to the Class A equipped tower cabs.

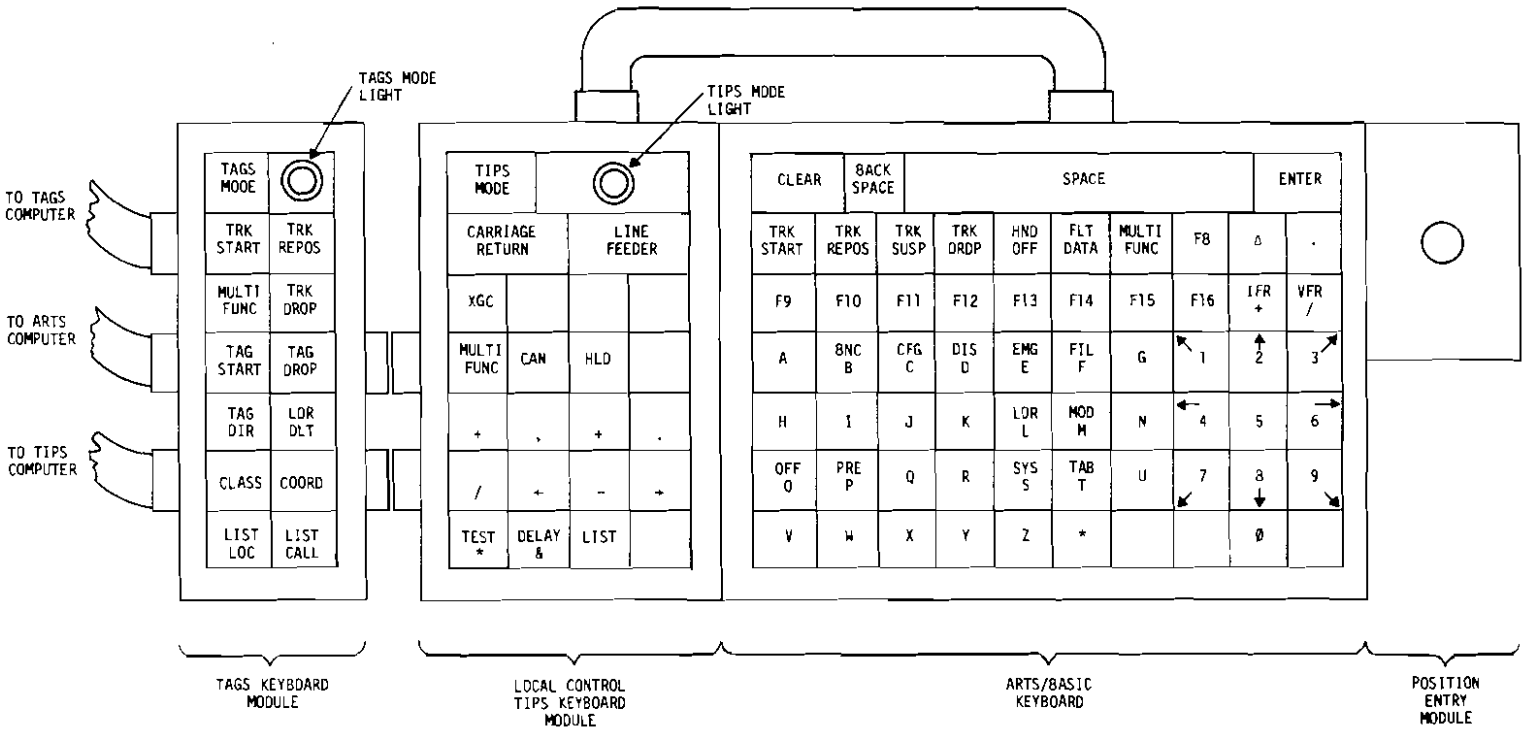

FIGURE 13.8-4. INTEGRATED TAGS/TIPS/ARTS KEYBOARD

TABLE 13.8-9. MODE SWITCHING LOGIC FOR THE INTEGRATED TAGS/TIPS/ARTS KEYBOARD

CURRENT KEYBOARD MODE	DESIRED KEYBOARD MODE		
	ARTS	TIPS	TAGS
ARTS	NA	Depress TIPS mode select	Depress TAGS mode select
TIPS	Depress TIPS mode select	NA	Depress TAGS mode select
TAGS	Depress TAGS mode select	Depress TIPS mode select	NA

In summary, this integrated keyboard alternative consists of the existing ARTS keyboard, a TIPS keyboard module, and a TAGS keyboard module. Although the keyboard has not undergone a human factors analysis, an attempt has been made to arrange the keys in a manner that would not be found ambiguous operationally in that,

- o The layout of keys on the ARTS keyboard is already familiar to most controllers, and
- o The keys for each of the three systems are kept separate except for the sets of keys that are essentially common to all three systems - namely, the alphanumeric and control keys.

In place of having controller stations with one, two or three ARTS sized keyboards, this integrated keyboard design would provide keyboards that are 1.0, 1.5, and 1.8 times the length of the existing ARTS keyboard. Finally, by covering the requirement for five keyboard combinations with three keyboards, as is done with this concept, the number of cabs with two or more types of keyboards would be reduced from 85 to less than 5, Table 13.8-2. By not requiring a controller to use different types of keyboards as he rotates through the various control positions in the tower cab, a source of potential controller confusion has been elminated.

13.8.2 Data Processing Considerations

There is a handful of suggestions put forth in the preceding sections of this chapter that have implications for the data processing systems in the tower cab. The first of these involves the availability of weather data for display on display III, the alphanumeric Information Text display, which is approximately the TIPS display. It is suggested in Table 13.2-1, Part III that

a) the full text of ATIS,

b) the full text of the latest local weather observations (including VAS, WVAS and wind shear), and

c) the full text of the latest terminal weather forecast be available for display upon request. In order that these data be available in the system driving the display, either some operator must enter the text, or an automatic entry method must be developed. The data from the VAS and other systems would be relatively easy to acquire, but the other data is not so readily available in machine readable form.

A suggestion is to put weather data in graphic form on the Airport Pictorial display (see Section 13.6). This implies both that the relevant observations are available in the display processor and that the software to generate the display tables and drive the display are available. It is the TAGS/ASDE-3 display that corresponds to the Airport Pictorial display described here, but that will be deployed to only a few airports. In essence, then, a new function is being suggested; namely, to generate alphanumerics for the ASDE-3 display using wind and weather observations as input.

A third suggestion, that 'time to touch down' be displayed on the pictorial displays, requires a computation whose reliability is open to question when based on the currently available data. Preliminary experiments using ARTS III beacon target reports were very disappointing.

REFERENCES FOR SECTION 13

1. Bradley, J. R., Jr., Evaluation of High Activity, Level Tower Cab, U.S. Department of Transportation, Federal Aviation Administration, FAA-RD-72-111, October 1972.
2. U.S. Department of Transportation, Federal Aviation Adminstration, NAS Operational Equipment, ARTS III, Air Traffic Training Publication N-9, April 1971.
3. Reamer, E.L., "Evaluation of an Airport Lighting Control and Display System," Report No. FAA-RD-75-158, October 1975.

14. TOWER CAB CONFIGURATION STUDIES: EQUIPMENT INTEGRATION

14.1 INTRODUCTION

This section is concerned with the installation of the display, data entry, and control (DDC) units for the major cab related elements of the MSPDs. Its objective is to estimate the minimum integration required from a cab operations viewpoint. Integration for cost reduction is not considered. The questions addressed are: If the current cab equipment and station layout were to be maintained and the major DDC units were added to the cab,

1. What would be the impact on the controller duties and cab operation?
2. Would the resulting operation be acceptable?
3. What equipment must or should be integrated to achieve satisfactory performance?

In examining these questions only the major DDC units were considered since they would have the principal impact on the cab. Display/control devices associated with such equipment as VAS, WVAS and Wind Shear systems were not included in the study.

The approach taken in the study was to select airports from each of the critical equipment based classes, i.e., classes for which two or all three major equipments (ASTC, TIPS, BRITE) would be installed, and to perform detailed analyses on each airport. From these analyses, the results were generalized to their respective classes as much as possible.

This case study approach was taken due to the great variation in cab layouts and operations. Cab equipment and station layouts and viewing problems are dependent on such factors as airport layout, cab orientation and location at the airport, runway utilization and configurations, cab size, and cab shape. In addition, each facility can have a different approach to satisfying the same requirement. Because of this variation it is not possible to study a "standard" cab for each class of airport. For the same reason, the ability to generalize from the case studies is limited.

The airports selected for study are shown in Table 12.4-2. Two airports were selected from Class A, Chicago, O'Hare, and Los Angeles, and two airports were selected from Class B, Boston Logan and St. Louis. These two classes will receive all three major DDC units, ASTC (TAGS or ASDE-3), TIPS, and BRITE A/N equipment. One airport was selected from Class C and the current operation at Chicago O'Hare, Los Angeles, and Boston was used to cover Class E. In this manner, all classes with two or more major DDC units were included. Future operations at Class E airports could not be included due to the lack of data on those airports. Finally, Portland, Maine was selected to represent an ARTS II facility and a TRACAB. With its addition the studies spanned large ARTS III facilities (Chicago and Los Angeles), medium ARTS III facilities (Boston and St. Louis) and an ARTS II facility.

The analysis of each airport is presented in the following sections beginning with Los Angeles. Techniques and assumptions used throughout each analysis are explained in the Los Angeles section and, thereafter, simply used. It is important to note that these analyses have not been reviewed by the respective airports and until so verified or corrected should be considered quite preliminary.

14.2 LOS ANGELES (LAX) CASE STUDY

14.2.1 Current Good Visibility Operation

The LAX airport layout with the cab location is shown in Figure 14.2-1. The cab is square and is aligned with the sides facing the compass directions. There are two sets of dual lane runways, the 24's on the Northside and the 25's on the Southside. The airport operates arrivals from the East and departures to the West about 70 percent of the time[1] and this includes the high activity periods. Normally arrivals land on the outside runways. There are six satellite type terminals, two on the Northside and four on the Southside. One-way flow restrictions for large aircraft moving between and around the satellites requires Ground Control advisories which represent a significant workload and require surveillance of the ramps. Noise abatement procedures and terminal layout place most operations on the Southside runways. Most flights originate or terminate at the four Southside satellites. For these reasons the Southside is of primary concern to the cab (particularly Ground Control). Current operations rates are shown in Table 14.2-1.

Helicopter operations operate into and out of the pad shown in Figure 14.2-1 and other areas in the general aviation and manufacturing area. Operations cross the approach ends of the 24's at about 500 feet of altitude and the 25's between the approach end and the crossing taxiways at about 1500 feet. Demand is 10 to 12 operations per hour and growing.

The controller stations are indicated in Figure 14.2-1. These are located in more detail along with the cab layout[2] in Figure 14.2-2. The area of responsibility for each control position is given in Table 14.2-2. As indicated in Table 14.2-2, the Northside Ground Control position is staffed only in the event of unusually high operations rates or operational difficulties. The Line of Sight (LOS) required by each controller is shown in Figure 14.2-2 with and without the Northside Ground Control position staffed. The LOS was established by correlating viewing angle from the cab with area of responsibility. Also,

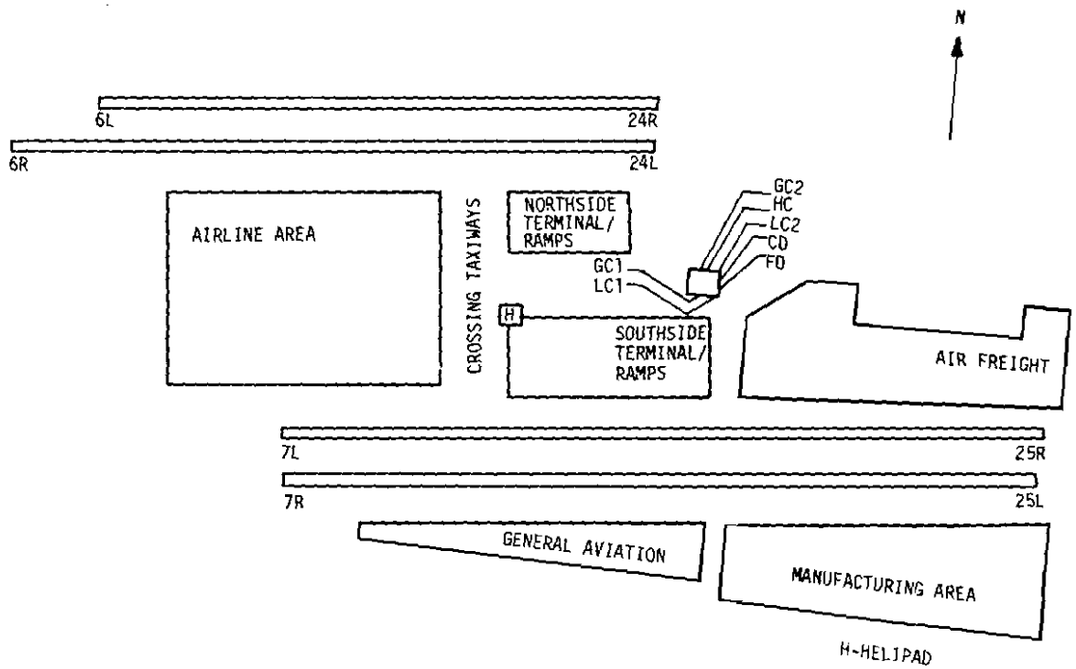

FIGURE 14.2-1. LOS ANGELES AIRPORT LAYOUT AND CAB LOCATION (CAB NOT TO SCALE)

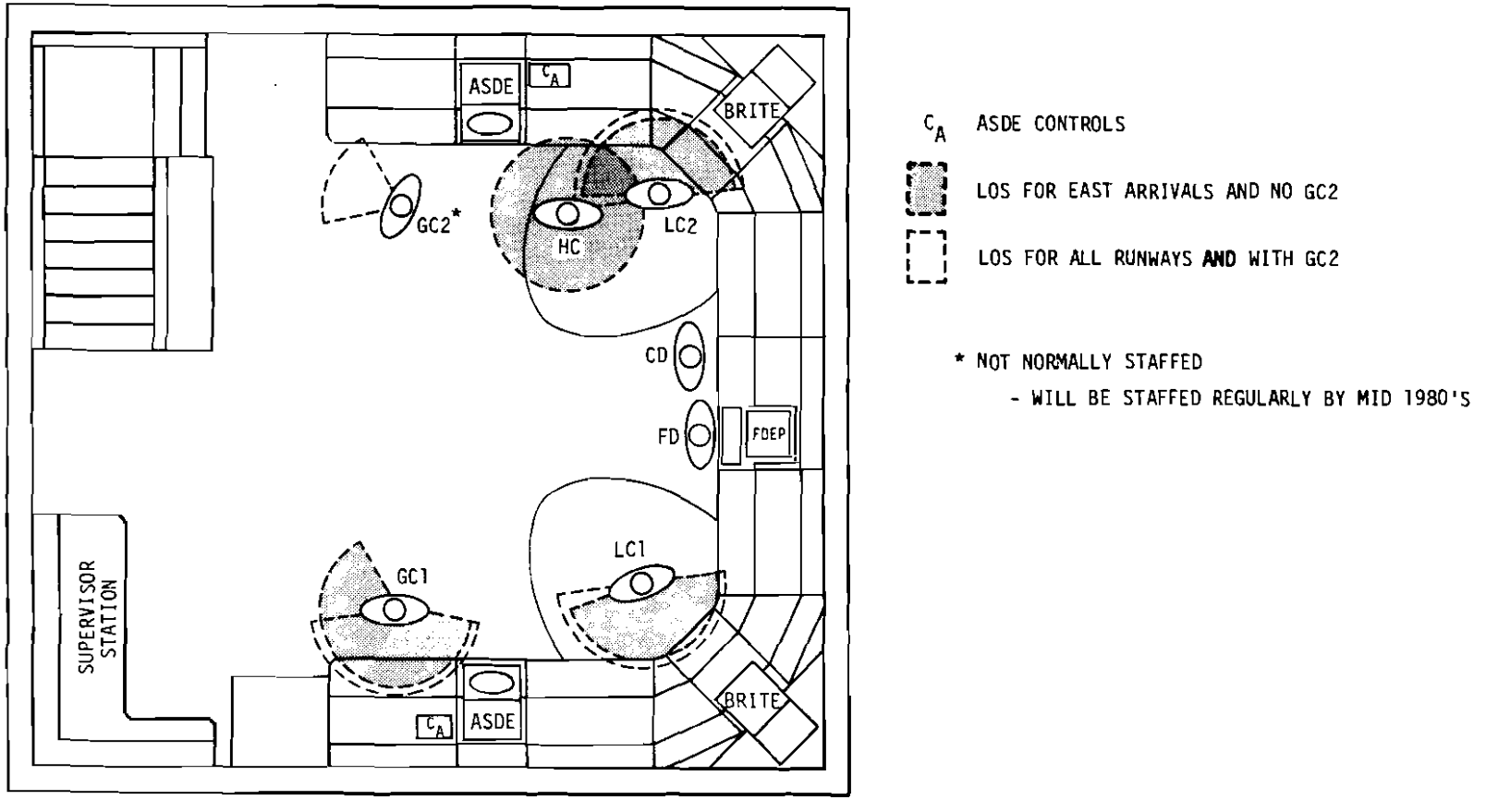

FIGURE 14.2-2. LOS ANGELES CAB LAYOUT AND VISUAL LINE-OF-SIGHT ASSUMPTIONS

TABLE 14.2-1. LOS ANGELES OPERATIONS RATES - CURRENT AND FORECASTED

	1976	1987[9]
Operations (000)		
Air Carrier	357	513
Air Taxi	64	86
Itinerant	475	600
Total	483	600
Instrument Approaches (000)	49	99

TABLE 14.2-2. LOS ANGELES CONTROLLER STAFFING

Control Position	Area of Responsibility
Local Control - 1 (LC1)	Southside runways
Local Control - 2 (LC2)	Northside runways
Ground Control - 1 (GC1)	Southside taxiways
Ground Control - 2 (GC2)*	Northside taxiways
Helicopter Control (HC)	All helicopter operations
Clearance Delivery (CD)	
Flight Data (FD)	

*Not normally staffed.

shown in Figure 14.2-2 is the BRITE viewing area. The large "footprint" on the floor surrounding the local controllers represents the area within which an observer will be able to read the ARTS alphanumerics with 90 percent accuracy. This viewing area is shown in more detail in Figure 14.2-3.

The viewing area "footprint" is based upon the work in referance 3. The area applies for alphanumerics 0.25" high on the 16-inch diameter, 145-raster line BRITE-TV display. Ninety percent legibility was used since this figure represents tests with no prior or related information on what was to be read. Controllers have flight strips, scratch pads, and, above all, mental correlation to assist in reading the alphanumerics which would tend to increase the legibility.

As seen in Figure 14.2-2, the controllers have good LOS to their area of responsibility. The only potential interference would involve Helicopter Control (HC) particularly when the Northside Ground Control is staffed. He will tend to block the view of LC2 when marking his flight strips or scratchpad and LC2 will tend to block the HC view of the BRITE. Some movement to avoid this blockage is required but its impact would be slight.

While LOS requirements look good, the flight strip flow appears laborious. Due to the layout of the cab there would be a great deal of movement required for Clearance Delivery (CD) to pass flight strips to Ground Control (GC1 and GC2). If CD and Flight Data (FD) were moved to a location closer to Ground Control, say at an island near the stairway, the strip flow would be better but the controllers would interfere with the LOS requirements of GC1 when GC2 is not staffed. Therefore, at Los Angeles, to limit the movement required of CD, the Ground Controllers do not use flight strips except in special circumstances. They use only a scratch pad. CD then hands off the flight strips directly to Local Control or Helicopter Control for their use.

14.2.2 Current Poor Cab-Visibility Operation

Los Angeles experiences visibility conditions which impact on airport surface surveillance (poor cab-visibility conditions)

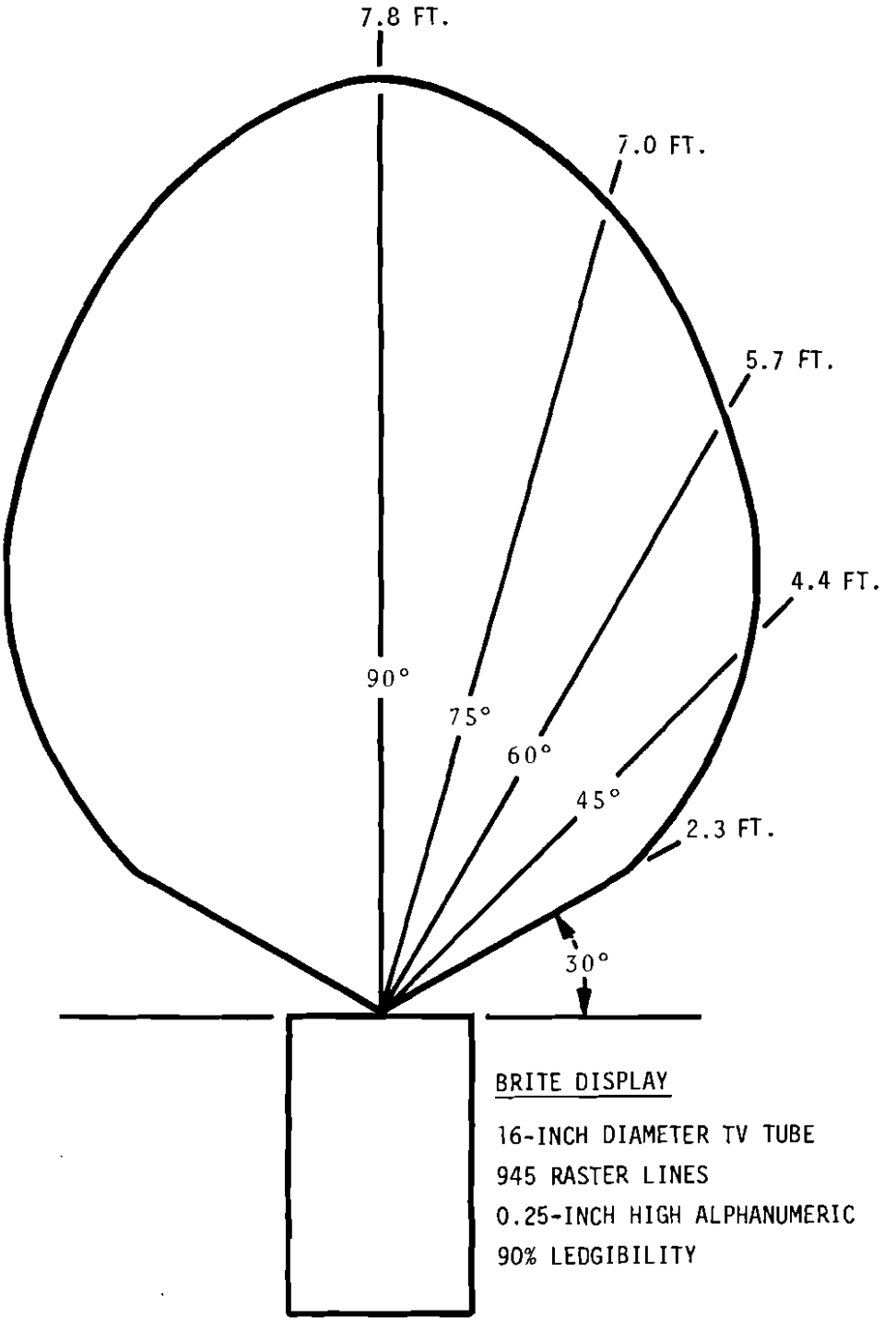

FIGURE 14.2-3 DISPLAY VIEWING AREA ESTIMATE

about 2.3 percent of the time. This figure is taken from reference 4 and covers visibilities of less than 1 mile between the hours of 0700 and 2100 (i.e., the airport's busy period). Despite this low percentage, it represents approximately 120 hours each year.

During poor cab-visibility conditions the ASDE radar is used. Figure 14.2-4 shows the viewing areas for both ASDE and the BRITE and the controller locations which must be taken to view them. While ASDE does not present alphanumerics, the same viewing area that is used for the BRITE is assumed. The requirements which would dictate this viewing area are target heading discrimination and position resolution. Test data[5] on these parameters is very preliminary but suggest a viewing area similar to that estimated for the BRITE. As is seen in Figure 14.2-4, GC1 and LC1 share an ASDE display and GC2, LC2 and HC share an ASDE display. Each of the ASDE displays is an independent radar channel having its own range and offset capabilities.

In examining the poor cab-visibility operation, LOS to the surface must be considered. Poor cab-visibility rarely eliminates all view of the surface and controllers generally prefer direct viewing to the radar presentation if possible (e.g., close in to the ramps). LOS is not included in Figure 14.2-4 to avoid an overly cluttered picture. Reference should be made to Figure 14.2-2 for LOS.

As can be seen from Figure 14.2-4, the ground controllers (GC1 and GC2) must stand away from their station somewhat to see the ASDE at a good viewing angle. Some movement back and forth between their station and the radar would be expected to permit scratchpad marking and a good view of the ramps (if visible),but the impact would be minor. Southside Local Control (LC1) must move back away from his station to see the ASDE. Since the viewing areas for the BRITE and ASDE intersect, the controller can view the ASDE without losing the use of the BRITE. However, when using his flight progress strips, he will have to leave the ASDE to return to his station as does Ground Control.

The most serious viewing problems appear to occur in the

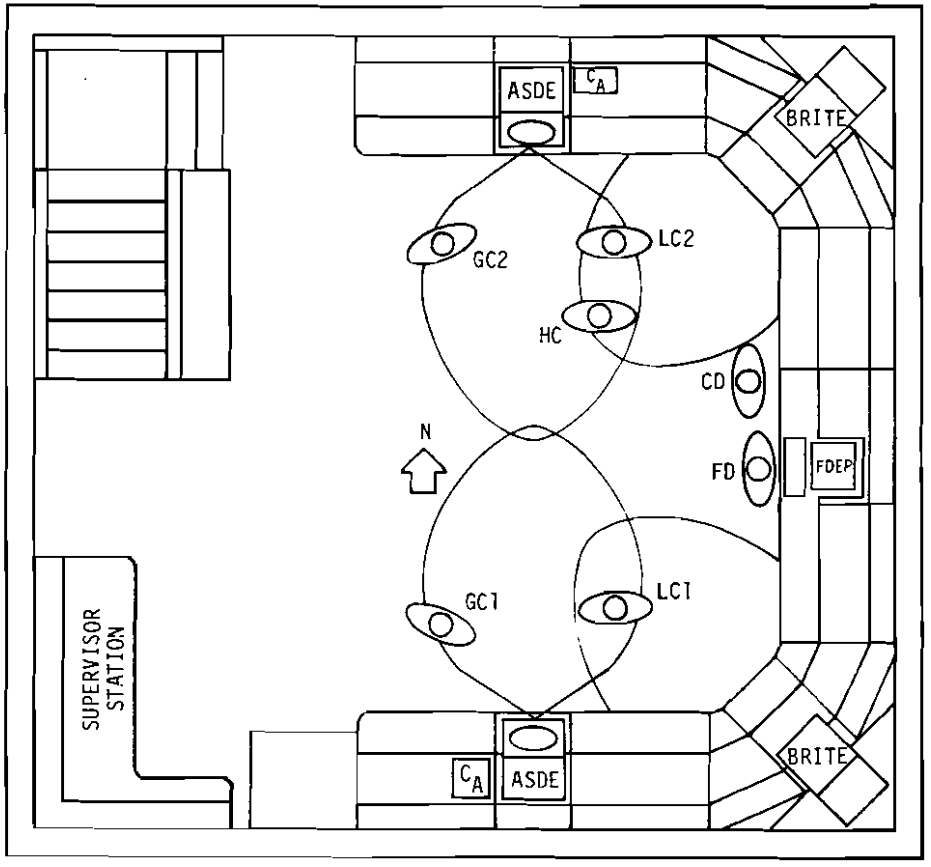

C_A ASDE CONTROLS

FIGURE 14.2-4. LOS ANGELES CAB LAYOUT AND CURRENT CONTROLLER LOCATIONS IN POOR-VISIBILITY IFR

Northside between HC and LC2. The local controller has priority on the use of the surveillance equipment and must move into the HC station to see the ASDE. HC must either move close into his station, precluding his use of ASDE, or out away from his station behind LC2. When out away from his station he can see both the ASDE and BRITE but cannot keep notes. As LC2 and HC find it necessary to go to their stations to take notes or mark strips, viewing loss and interference could be a serious problem. This problem will grow as the number of helicopter operations increases and when GC2 is staffed regularly impacting on the HC LOS to that portion of the surface which remains visible (e.g., the helicopter pad itself).

A potential solution to the HC/LC2 viewing problem is to add an ASDE display to the cab hung beside the Northside BRITE on a double yoke. This solution is not now possible since the LAX radar is a special one of-a-kind unit with only two displays available (see Section 5.2.4.2). However, the Western Region is in the process of procuring a NUBRITE display system for the LAX radar at which time a third display could be added, which could simply be a repeater showing the same presentation as that at the current Northside location.

14.2.3 Future Los Angeles Operation

The forecasted LAX operations rates are given in Table 14.2-1. Significant growth in operations is forecast, approximately 25 percent overall and over 40 percent in air carrier. To support this increase in demand, it does not appear that added runways are planned. Therefore, the two Local Control positions should remain as they are. An increase in helicopter operations is contemplated and so Helicopter Control will become a more active position. Finally, the increase in operations will require that the Northside Ground Control position (GC2) be staffed more frequently. An analysis in Appendix C indicates that no more than two Ground Controller positions will be required but that GC2 will possibly be staffed on a regular basis.

Major cab related equipment planned for LAX is given in Table 12.4-2. The DDC units associated with TAGS, TIPS, and the BRITE

Alphanumeric equipment are considered in this analysis. The TAGS and BRITE displays were considered for installation either in the console (if there was existing space) or hung from the ceiling in a yoke to permit turning and tipping. These options are depicted as they will be shown in subsequent layouts in Figure 14.2-5. Although Los Angeles does not today have a control unit or alphanumeric keyboard because of the relatively long run required to the TRACON (located in the Manufacturing area on Figure 14.2-1), it was assumed that they would in the future. Digital modems will probably be available for controls and keyboard based upon the experiments currently under way in the Tampa/Sarasota terminal area. These would facilitate adding these functions to the Los Angeles cab.

The TIPS display is also shown in Figure 14.2-5. In this analysis it was assumed that TIPS would be pedestal mounted as suggested in Section 8, but from the floor, not the counter top. A pedestal mount was assumed to provide the flexibility of rotating or tipping the display. The floor mount was chosen to better position the quick action entry keys and to improve line of sight and reach to the console. The two pedestal mounting options are shown in Figure 14.2-6. As can be seen from Figure A, a counter mounted display will obstruct the controller's view of the console and even some of the airport surface. This obstruction of the surface will be even worse to controllers from other stations. Being further away these controllers (e.g., LC1 looking past the GC1 TIPS) will have less ability to look over the display. In addition to viewing problems, the counter mount makes "quick action" keyboard entry awkward. The controller must hold his entire arm up with a sharp bend at the elbow rather than out and down as in the floor mounted option. In Figure B, it is seen that a simple keyboard entry is provided at counter height. In addition, no obstruction to the airport or console occurs.

14.2.4 IFR Operation in the Late 1980's

14.2.4.1. Equipment Installation

The equipment layout and controller viewing areas for the

ASDE/TAGS/BRITE TV DISPLAYS

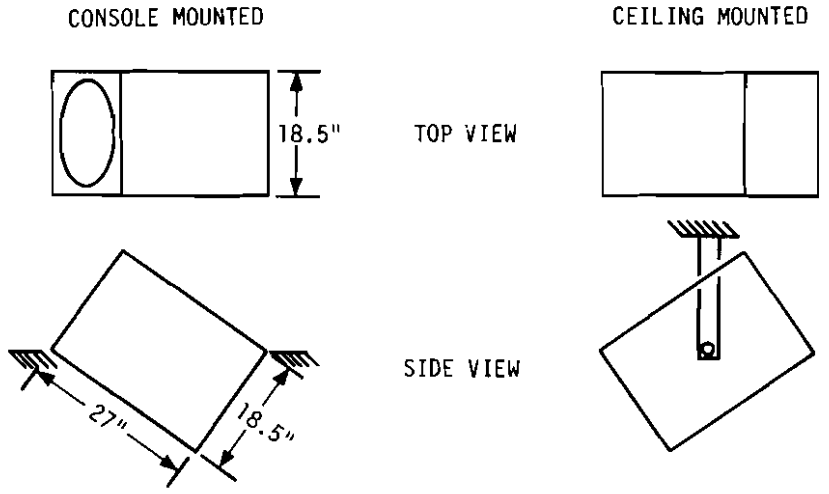

FLOOR MOUNTED TIPS DISPLAY/DATA ENTRY

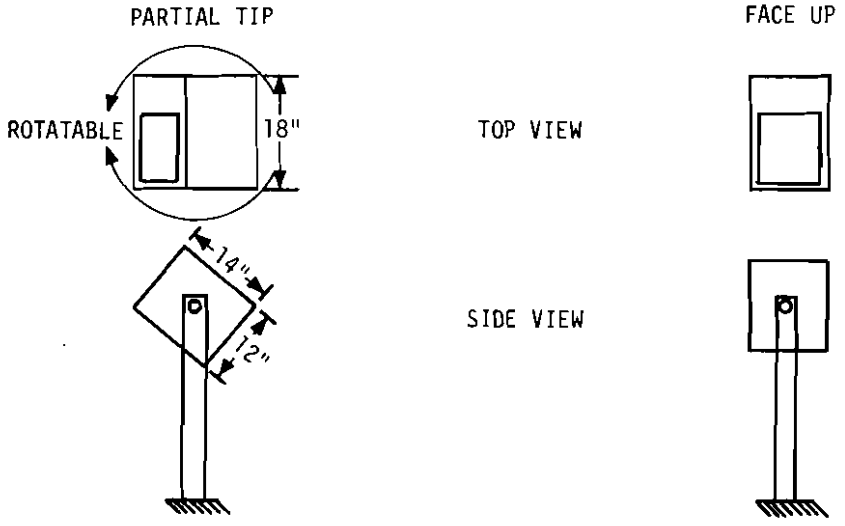

FIGURE 14.2-5. MAJOR CAB DISPLAYS

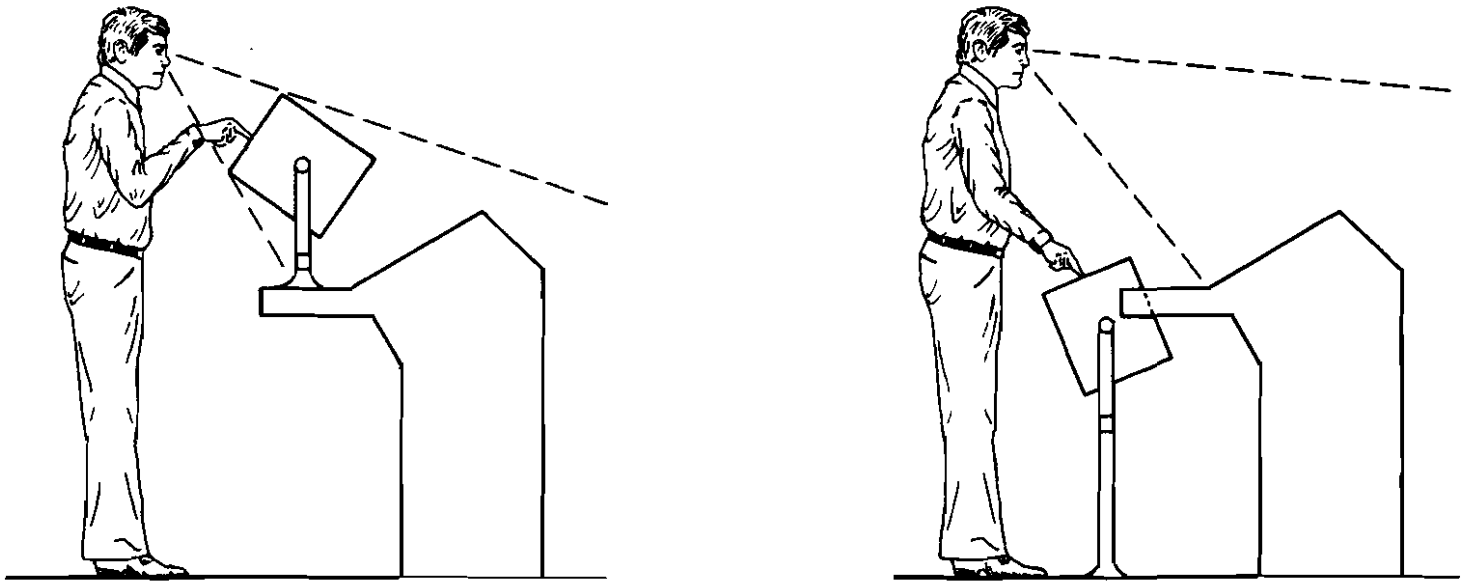

A. TIPS PEDESTAL MOUNT FROM COUNTER

B. TIPS PEDESTAL MOUNT FROM FLOOR

FIGURE 14.2-6. TIPS INSTALLATION OPTIONS

LAX cab in the late 1980's are shown in Figure 14.2-7. The TAGS display is shown simply replacing the current ASDE. TAGS would then provide two independent channels with each channel being shared by a ground and local controller. While sharing TAGS between ground controllers is not considered acceptable due to the large number of surface targets, sharing between ground and local control would probably be acceptable. Each display channel would identify only the targets corresponding to the user ground controller plus relatively few Local Control targets. To avoid excessive display clutter, the departure queue would not be identified and Local Control would rely on the ordering of his TIPS list for this information. The TAGS controls and keyboard would be located near Ground Control, the primary user. In Figure 14.2-7 the control unit is shown replacing the ASDE control unit and the keyboard is simply sitting on the counter top beside the display.

The TIPS display units (with "quick action" data entry) are shown pedestal mounted from the floor as previously discussed except for Flight Data. At that location the unit was console mounted in the space left by the FDEP removal. The TIPS keyboard is assumed to be integrated with the BRITE keyboard for Local Control due to anticipated space limitations. This is discussed further insubsequent sections and in Section 14.8.1 Item 3. Each station is assigned a TIPS keyboard with the keyboard simply sitting on the counter near the display except for Northside Ground Control which is console mounted in currently available console space since there is no available counter space.

The BRITE displays are located as they currently are. BRITE controls are added to the console in currently empty locations. BRITE keyboards are assumed integrated with TIPS keyboards and are left on the counters near the displays.

14.2.4.2 Equipment Impact on the Operation

The addition of the MSDPs equipment has both positive and negative effects on the cab operation. These effects are listed as follows:

Positive Aspects

1) Flight identity is provided to Ground Control via TAGS to

assist control under bad cab-visibility conditions.

2) Inter-controller hand-off of flight data is facilitated by TIPS permitting Ground Control full access to flight data.

3) The LC2/HC interference problem discussed previously with regard to ASDE and the BRITE is somewhat reduced with the introduction of TIPS. As shown in Figure 14.2-7, LC2 can simply use the helicopter controller's TIPS in poor visibility IFR. Such system reconfiguration is straightforward for TIPS. HC must still stand back behind LC2 but he has a clear view of the tilted TIPS. At 0.25-inch height (as specified), the TIPS alphanumerics should be legible to HC. However, repeated movement away from TAGS to TIPS will be required for "quick action" data manipulation and entry.

Negative Aspects

1) Even mounted low, from the floor TIPS may interfere with access to console mounted controls. However, the controller can move around TIPS and can rotate and tilt the unit up to facilitate reaching the console. With these actions the BRITE and TAGS control units can be reached while keeping the display in view, but the action is somewhat awkward. This is probably acceptable for the infrequently used controls but may not be for the "quick look" controls (TAGS and BRITE) or the TAGS "two presentation" select feature.

2) TIPS displays and the TAGS, TIPS, and BRITE keyboards take up a good deal of counter space. Writing space for note and record keeping is very limited for both ground controllers and for Helicopter Control. TIPS may not eliminate all note and record keeping. To the degree this is the case, an alternative space will have to be provided (e.g., a pull out surface from beneath the counter).

   In the case of the GC2 position, limited counter space forces installation of the TIPS keyboard in available console space. This results in a very poor location. The controller must move around the console and swing the TIPS display around to see the preview area.

3) The shared TAGS display while acceptable with respect to

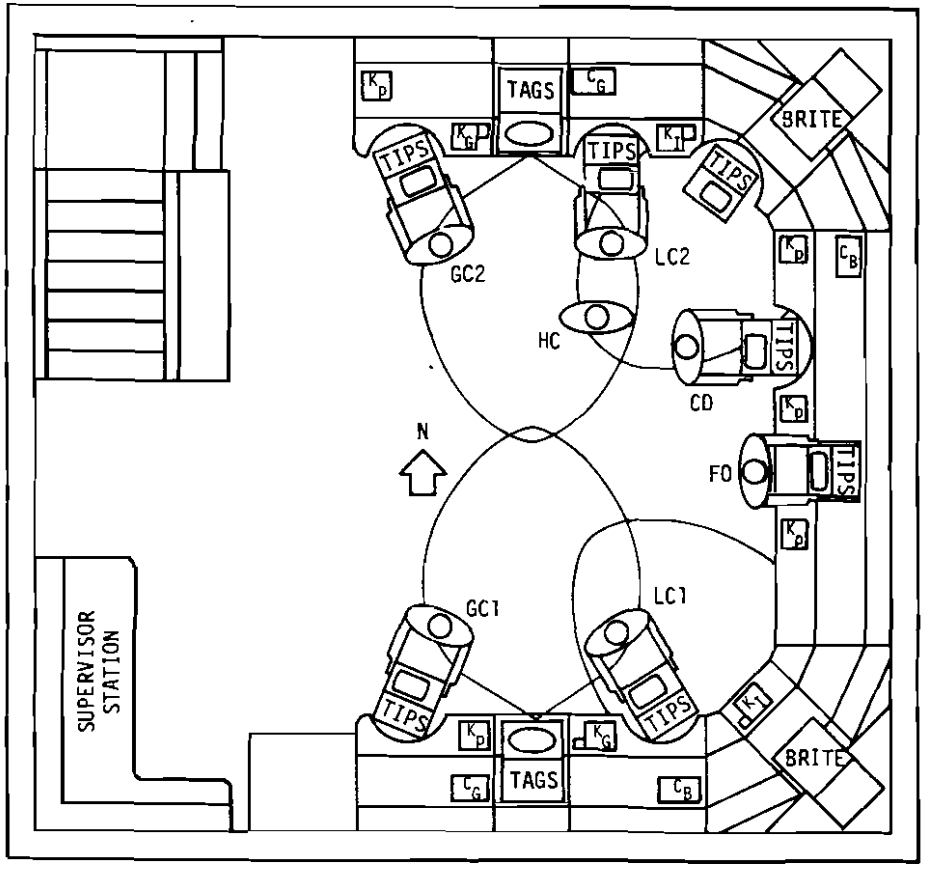

C_B BRITE CONTROLS

C_G TAGS CONTROL

K_I INTEGRATED BRITE/TIPS KEYBOARD

K_P TIPS KEYBOARD

K_G TAGS KEYBOARD

FIGURE 14.2-7. LOS ANGELES IFR OPERATIONAL LAYOUT IN THE LATE 1980'S

alphanumeric clutter, will compromise the "quick look" and "two presentation" select options. When shared, these options will have to be set up so as to not adversely affect the local controller. For example, if the options are set up with Ground Control,the prime user, the identity tagging scheme or range and offset switched to should not effect the local controller's use of the system. Figure 14.2-8 shows how the two channels might be set up at LAX. Also shown is an optional Ground Control range and offset which might give better resolution in the ramp area due to its smaller range. This option would not be available to either ground controller since it would withhold from both local controllers airport coverage they require.

14.2.4.3 Equipment Options

In response to the negative aspects of the equipment in the installation hypothesized in Figure 14.2-7, several options can be defined. These are presented as follows:

1) To correct for the LC2/HC interference, a TAGS repeater may be hung beside the Northside BRITE display. LC2 and HC would then remain in their VFR (current) stations at their TIPS displays and with good view of both TAGS and the BRITE.

2) To improve access to the TAGS/BRITE "quick look" functions and the TAGS "two presentation" select, these controls could be located on the keyboards rather than in the remote control units. Better still, the functions could be integrated into the TIPS display/"quick action entry."

3) To provide counter space and improve the TIPS keyboard location for GC2, the TAGS and TIPS keyboards can be integrated.

4) To permit more flexibility in setting up TAGS "quick look" and "two presentation" select options, added TAGS channels could be provided. Local control displays could be hung beside the BRITES. However, if this were done an integrated TIPS/TAGS/BRITE keyboard would have to be provided and space found for the TAGS controls at the Local Control stations.

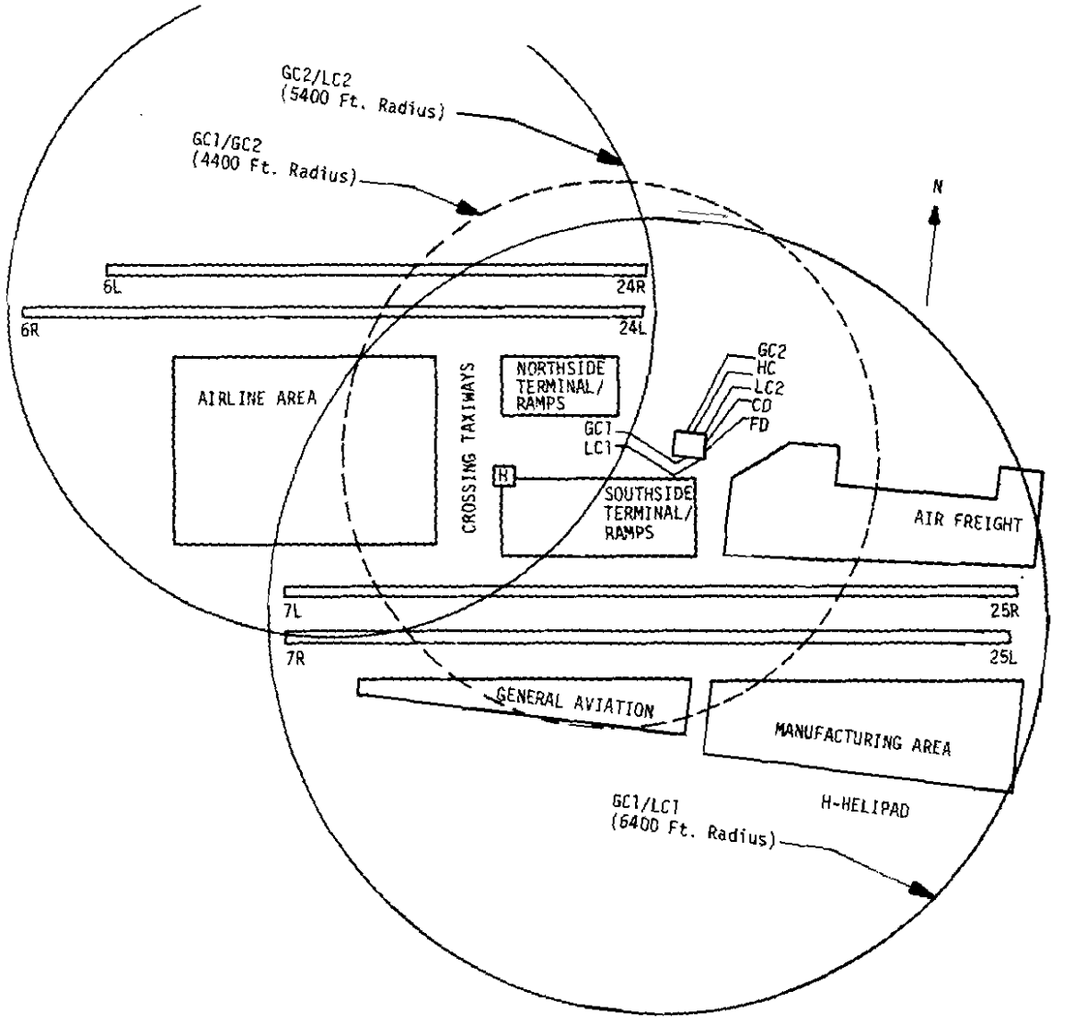

FIGURE 14.2-8. TAGS DISPLAY SETUP AT LOS ANGELES FOR 2 CHANNELS

14.2.5 VFR Operation in the Late 1980's

The equipment layout and controller stations for the LAX cab in the late 1980's with the controllers positioned for VFR operation are shown in Figure 14.2-9. As indicated only the clearance delivery controller is moved with respect to the current station since the console is currently occupied by a field lighting panel and various landing aid controls/monitors (REIL, VASI). This slight movement back would not affect Clearance Delivery's primary duties.

As seen in the figure, the TIPS display units are tipped and rotated from their IFR orientations to permit the current VFR positioning. Pedestal mounting permits this flexibility. However, as in the poor cab-visibility situation, the TIPS may interfere with access to console mounted controls. In addition, if it is necessary for Ground Control to move close to the console to see all of the ramp area, TIPS will interfere with this action. Whether or not this is required at LAX was not determined in this study.

14.2.6 Overall System Assessment

The equipment installation in a more or less add-on fashion appears acceptable under the following conditions:

1) The Northside Local Control and Helicopter Control positions should receive at least a TAGS repeater to relieve the interference problem cited. This would even seem advisable now, with the ASDE system.

2) The TIPS, TAGS, and BRITE keyboards should be integrated to minimize their impact on the limited space available.

Even under these conditions, the equipment leaves very little counter space available for note taking, etc. and alternative means for providing this may be required.

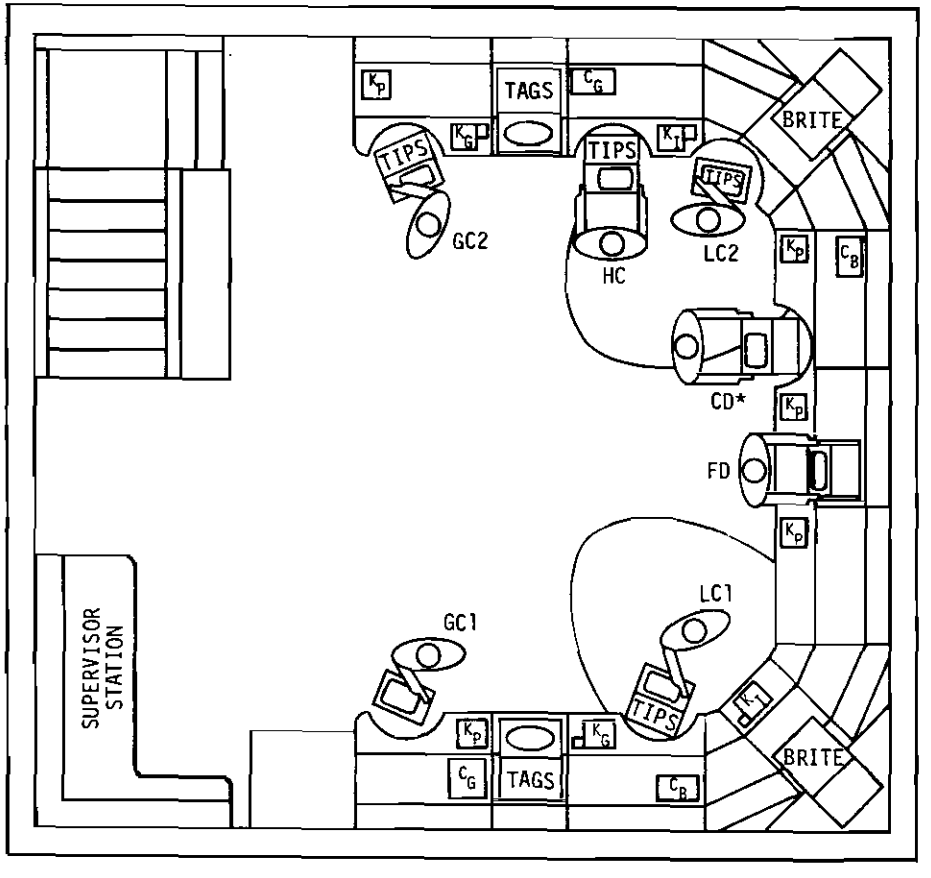

C_B BRITE CONTROLS

C_G TAGS CONTROLS

K_I INTEGRATED BRITE/TIPS KEYBOARD

K_P TIPS KEYBOARD

K_G TAGS KEYBOARD

* MOVED SLIGHTLY COMPARED WITH CURRENT VFR POSITION

FIGURE 14.2-9. LOS ANGELES VFR OPERATIONAL LAYOUT IN THE LATE 1980'S

14.3 CHICAGO O'HARE INTERNATIONAL AIRPORT (ORD) CASE STUDY

14.3.1 Current Good Visibility Operation

The ORD airport layout is shown in Figure 14.3-1. The cab is a pentagon and is located adjacent to the airline terminal facilities near the center of the airport. The airport's runways are operated as two independent operations. The northside operation utilizes runways 14L/32R, 18/36, 22R/4L, and 27R/9L; and the southside operation utilizes runways 14R/32L, 22L/4R, and 27L/9R. Typically, the airport operates four runways at a time - an arrival/departure pair on both the north and the south sets of runways. To accommodate arrival traffic peaks, the airport can operate five runways - arrivals on 14L, 14R, and 9R and departures off 4L and 4R. Current operations rates are presented in Table 14.3-1.

The controller stations are shown in Figure 14.3-1. These are located in more detail along with the cab layout[6] in Figure 14.3-2. The area of responsibility for each control position is given in Table 14.3-2. The six control positions are staffed on a full time basis.

From Figure 14.3-2, it is seen that LC4 has a good LOS of his area of responsibility - the northside runways. For the various runway configurations, both GC1 and GC2 must have a 360-degree LOS capability. To reduce potential LOS problems, both ground controllers have been stationed on the southside of the cab in good view of the primary airport traffic areas.

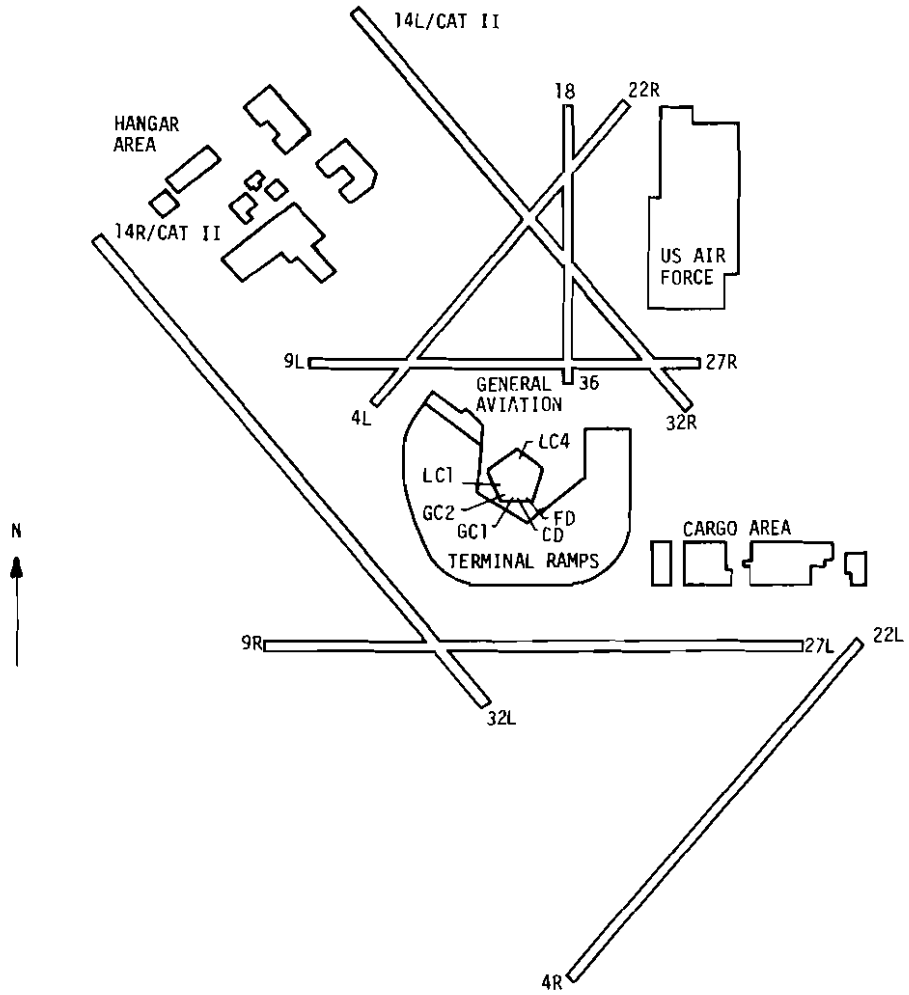

FIGURE 14.3-1. O'HARE AIRPORT LAYOUT AND CAB LOCATION (CAB NOT TO SCALE)

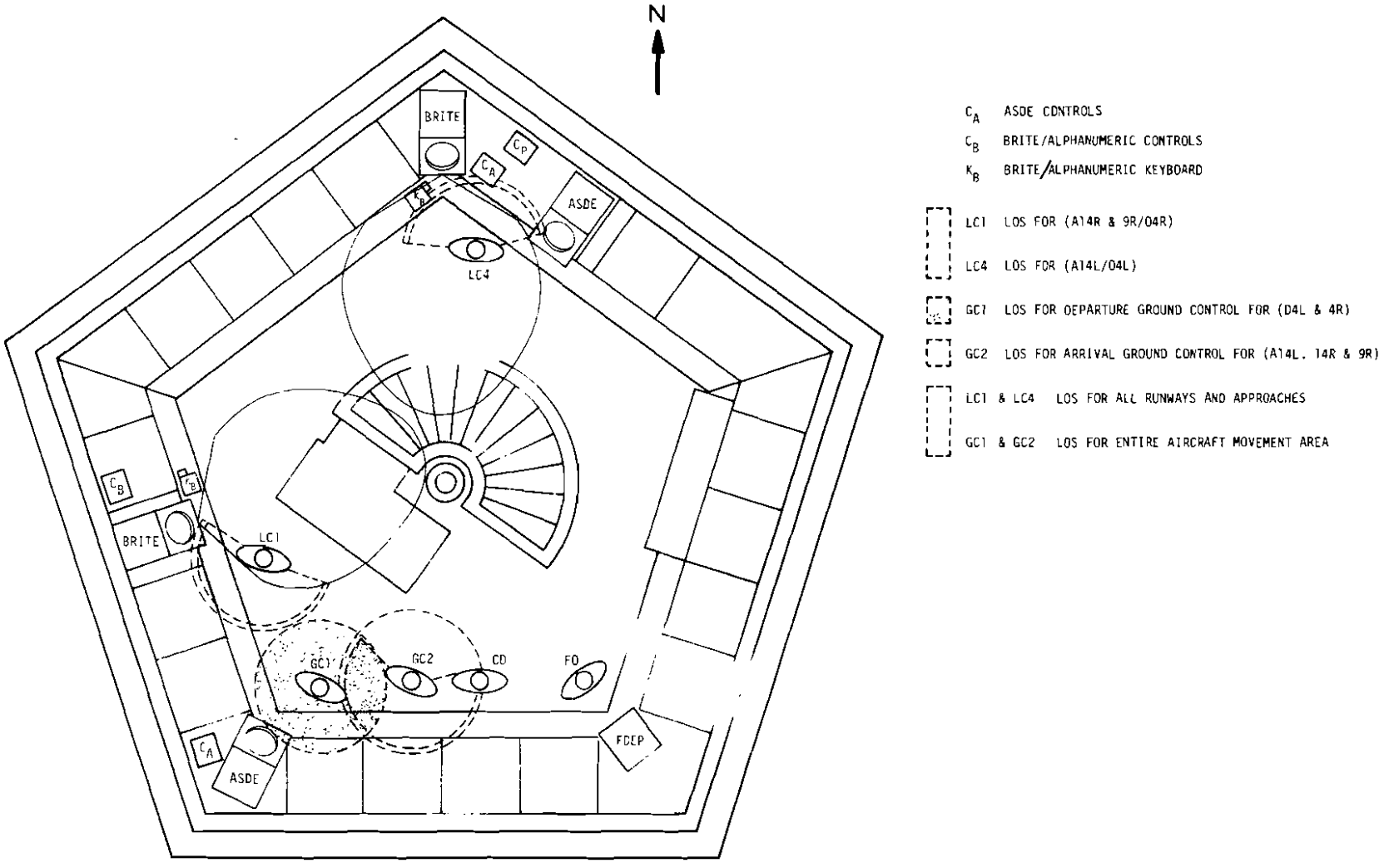

FIGURE 14.3-2. O'HARE CAB LAYOUT AND VISUAL LINE-OF-SIGHT ASSUMPTIONS

TABLE 14.3-1. O'HARE OPERATIONS RATES - CURRENT AND FORECASTED

	1977 [9]	1987 [9]
Operations (000)		
Air Carrier	639	663
Air Taxi	76	76
Itinerant	730	740
Total	730	740
Instrument Approaches (000)	48	50

TABLE 14.3-2. O'HARE CONTROLLER STAFFING

Control Function	Control Station	Area of Responsibility
Local Control	LC1 LC2 LC3 LC4	Southside runways Backup station Backup station Northside runways
Ground Control	GC1 GC2	Arrival taxiway traffic Departure taxiway traffic
Clearance Delivery	CD	
Flight Data	FD	

LC1, who is responsible for the southside runways, has a good LOS of runway 14R/32L. However, LC1 must look between controllers GC1, GC2, CD and FD in order to monitor traffic on either runway 9R/27L or 4R/22L. This situation is a potential LOS problem.

Two BRITE displays are installed in the tower cab. A console mounted BRITE-2 is located adjacent to both the LC1 and the LC4 stations. The display viewing area at each of the two stations appears acceptable.

From Figure 14.3-2, it is seen that the flow of departure flight strips requires some controller movement. The extent of this movement was estimated from the cab layout and is presented in Table 14.3-3. GC2, who is responsible for departures, must move approximately five feet to deliver flight strips to either the LC1 station or to a LC4 flight strip receiving tray located over the stair well at the center of the tower cab. This movement may cause a problem during low visibility operations when GC2 shares the ASDE display with GC1 and LC1. As seen in Figure 14.3-3, GC2 is at the outer edge of the display viewing area when he is standing at his station. In delivering strips to the LC4 receiving tray, GC2 is forced to move beyond the acceptable ASDE viewing area and to lose contact with the on-going traffic situation.

TABLE 14.3-3. O'HARE CONTROLLER MOVEMENT

Controller Movement to Deliver Departure Flight Strips		
From	To	Approximate Distance
FD	CD	2 FT
CD	GC2	2 FT
GC2	LC1	5 FT
GC2	LC4	6 FT (to strip tray located over stair-well at center of Tower CAB)

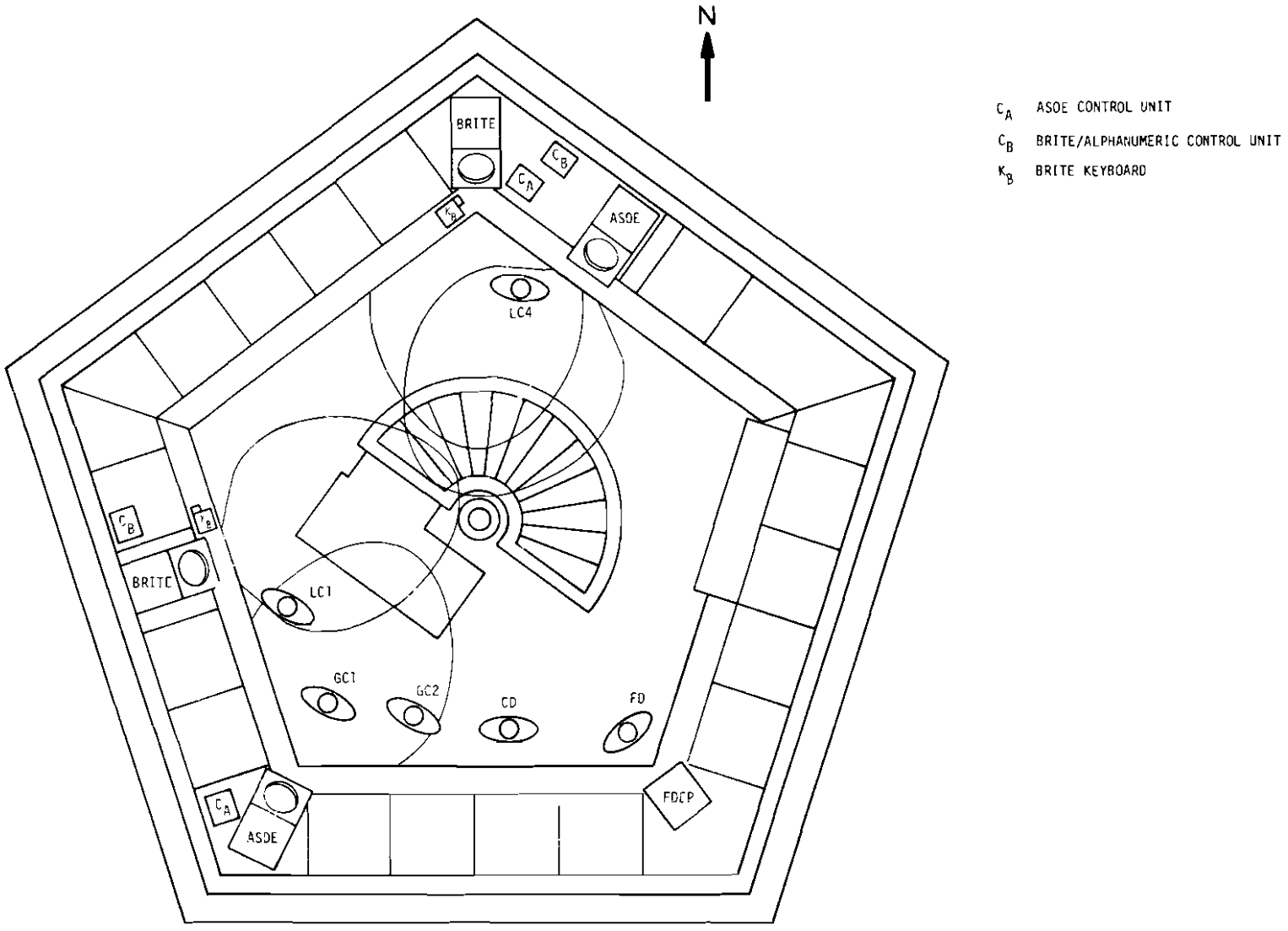

FIGURE 14.3-3. O'HARE CURRENT IFR OPERATIONAL LAYOUT

14.3.2 Current Poor Visibility Operation

ORD experiences visibility conditions which impact on airport surface surveillance about 2.3 percent of the time.[4] This number represents all visibilities under one mile between 0700 and 2100 and totals about 118 hours each year. ORD has two Category II equipped runways - 14L and 14R.

Two ASDE displays are installed in the tower cab, Figure 14.3-3. One unit is console mounted next to the LC4 station and is used solely by that controller. The second unit is console mounted between the GC1 and LC1 stations and is shared by those two controllers and GC2. The display viewing areas are acceptable for GC1 and LC4. However, LC1 and GC2 may experience some difficulty in viewing the shared ASDE display. In addition to operating at the edges of the display viewing area, LC1 and GC2 may find GC1 blocking their views of the console mounted display as he moves about his station.

Each of the ASDE displays is an independent radar channel with its own range and offset capabilities. Figure 14.3-4 shows range and offset setups for both ASDE displays. They are in keeping with the areas of responsibility of the display's viewers. LC4 has his display setup on the northside runway complex. The display shared by LC1, GC1, and GC2 is setup to cover the southside runways and the taxiway network. Depending on the operational southside runways, the coverage of this second ASDE presentation can be extensive. However, both ground controllers at times prefer a more compact

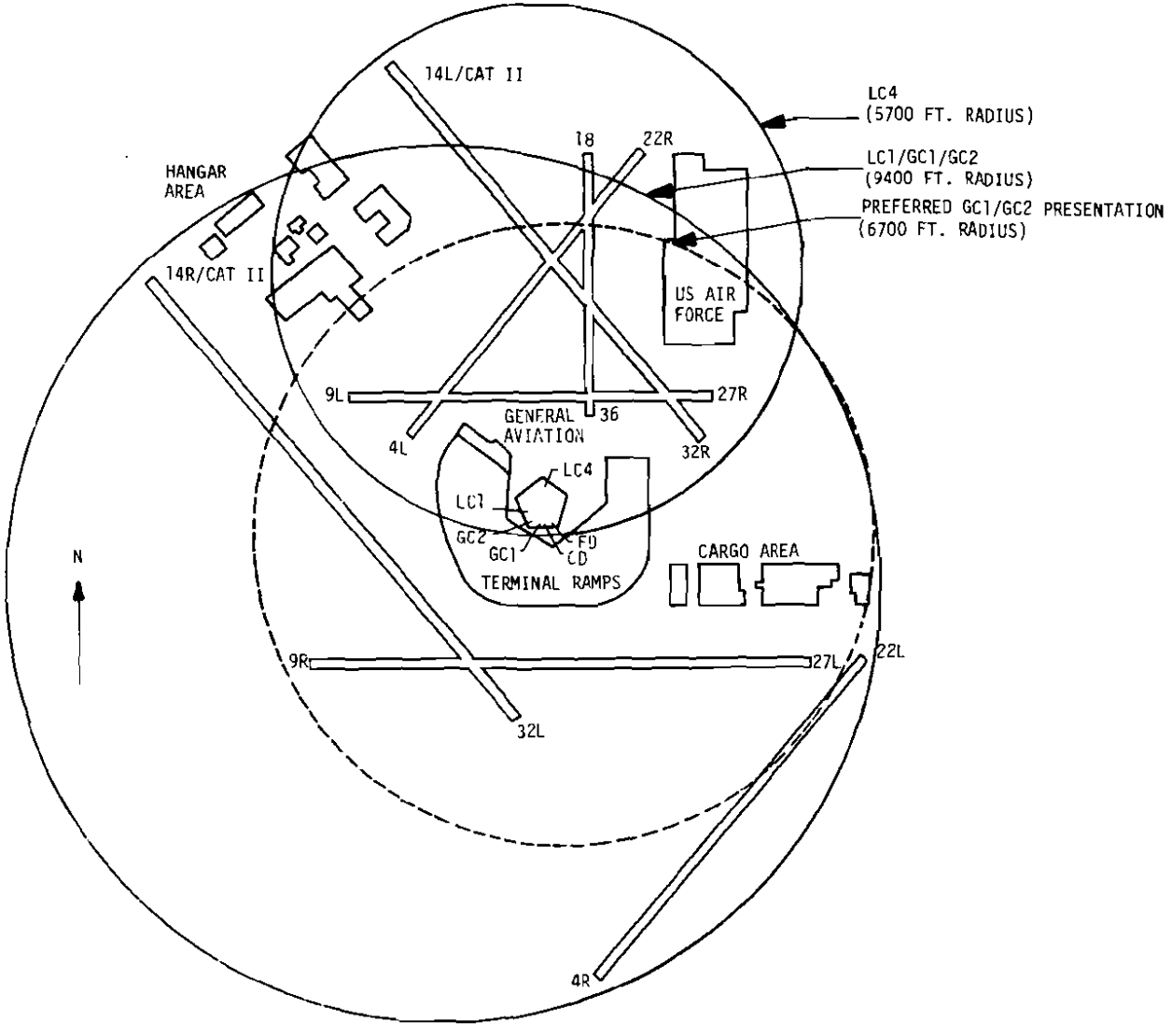

FIGURE 14.3-4 ASDE DISPLAY SETUPS AT O'HARE

presentation focused on the hub of traffic around the terminal area. This more compact coverage is shown by the dotted circle in Figure 14.3-4. If the display coverage requirements of LC1 as opposed to those of GC1 and GC2 cause operational difficulties, a possible, but expensive, solution would be to install a third ASDE channel/display. A third ASDE display, ceiling-hung between GC1 and GC2 would permit the two ground controllers to share the ASDE display. LC1 would continue to use the ASDE console mounted in the corner.

14.3.3 Future O'Hare Operation

The forecasted ORD operations rates are presented in Table 14.3-1. ORD is a mature airport with little growth anticipated. The airport layout and the tower cab staffing are expected to remain as they are today.

The major cab related equipment planned for ORD is given in Table 12.4-2. The DDC units associated with TAGS, TIPS, and the BRITE alphanumeric equipment are considered.

14.3.4 O'Hare Operation in the Late 1980's

14.3.4.1 Equipment Installation

The equipment layout and controller viewing areas for the ORD cab in the late 1980's are shown in Figure 14.3-5. A TAGS display is shown replacing each of the two ASDE displays. Since sharing a TAGS display between two ground controllers is not considered acceptable due to the large

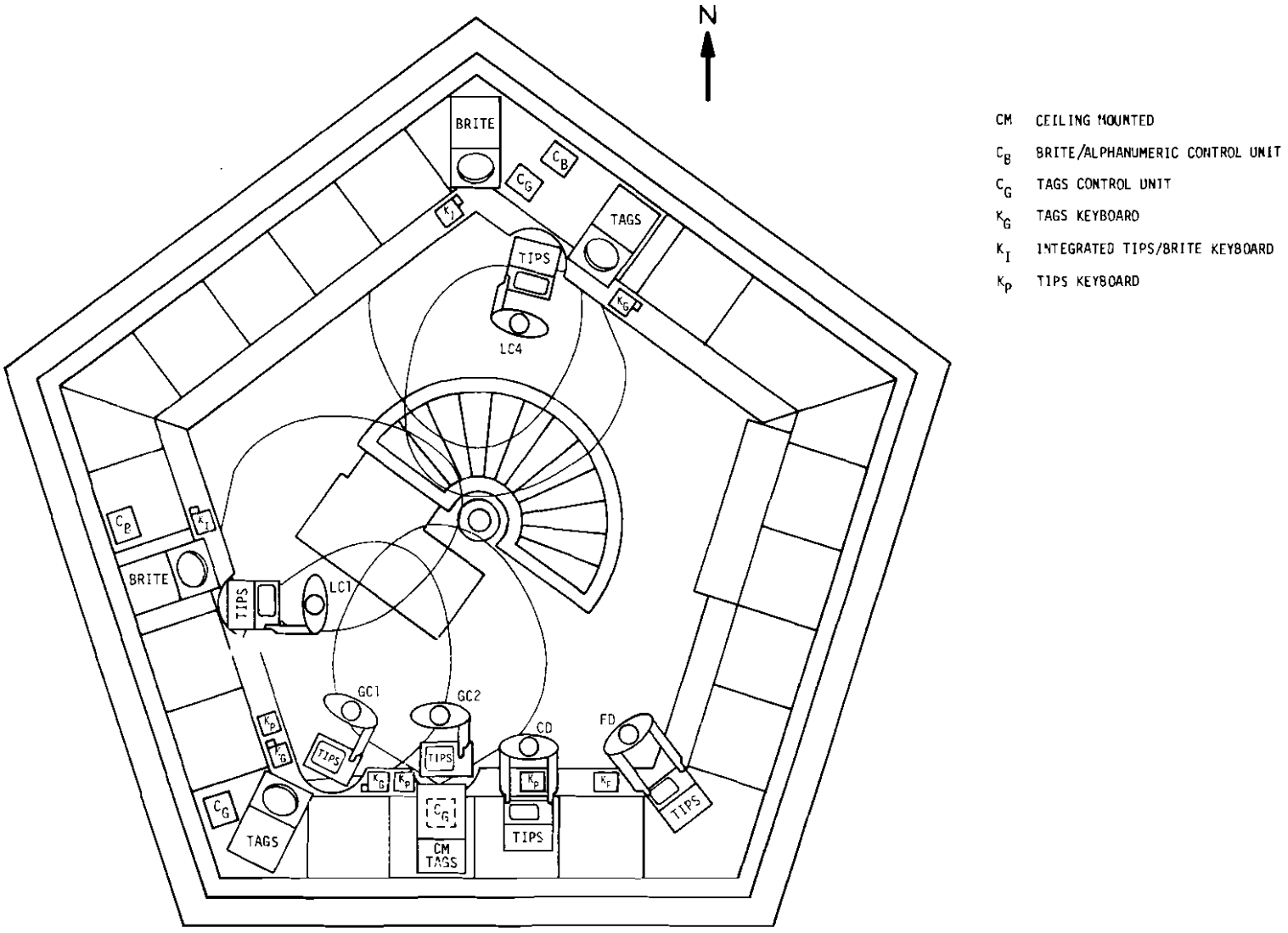

FIGURE 14.3-5. O'HARE IFR OPERATIONAL LAYOUT IN THE LATE 1980'S

number of surface targets, a third TAGS display is shown as ceiling-mounted over the GC2 station. Consequently, LC4 and GC2 have individual TAGS displays/channels and LC1 and GC1 share a TAGS display/channel. In Figure 14.3-5 the control units are shown as replacing the ASDE control units or in vacant console areas and the keyboards are shown as sitting on the counters beside the displays. For the shared display, the TAGS control unit and keyboard are located near GC1, the primary user.

The TIPS display for FD is shown replacing the console mounted FDEP. The TIPS display for CD is also console mounted in the space currently occupied by flight strip trays. The four remaining TIPS displays are pedestal mounted from the floor and cut into the counter. The TIPS keyboards are located on the counters near the displays. To reduce the number keyboards for local control, the TIPS keyboard is assumed to be integrated with the BRITE keyboard at that position.

The BRITE displays/controls are located at their current positions. The BRITE keyboard is assumed to be integrated with the TIPS keyboard and positioned on the counters near the displays.

14.3.4.2 Equipment Impact on Future O'Hare Operation

It is estimated that the addition of the MSDPs equipments in the manner just described would have the following operational impact:

Positive Aspects

1) Flight identity via TAGS is provided to Ground Control to assist control under poor visibility conditions.
2) Inter-controller handoff of flight data is facilitated by TIPS so GC2 is no longer required to leave his station in order to deliver flight strips.
3) TIPS provides flight data at the controller stations on arrivals as well as departures.
4) TAGS, used as an all weather surveillance display, could eliminate the possibly significant LC1 line-of-sight problem by eliminating the need for LC1 to look between GC1, GC2, CD, and FD, when monitoring traffic on runways 9R/27L and 4R/22L.

Negative Aspects

1) The post mounted TIPS display would tend to interfere with the controller's access to TAGS and BRITE control units. However, the controllers would still be able to reach these units while keeping the displays in view. This potential awkwardness may be satisfactory on an infrequent basis but could cause a problem for the TAGS and BRITE quick look features and the TAGS two presentation select feature.
2) The post mounted TIPS display and the counter positioned keyboards take up counter space. At ORD the

reduced counter space will be most apparent for GC2. As seen in Figure 14.3-5, GC2 has little remaining counter space for note-taking or for personal use.

3) The TAGS display shared by LC1 and GC1 will compromise the display presentation and the utilization of the unit's quick look and two presentation select features.

4) The counter locations of the TIPS keyboard for LC1 and LC4 are somewhat inconvenient, requiring rotation of the TIPS display to see it when making entries. The anticipated infrequent use of the keyboard may make this situation operationally acceptable.

In response to the negative aspects of equipment installation hypothesized in Figure 14.3.5, several options have been defined:

1) To improve access to the TAGS/BRITE quick look and the TAGS two presentation features, these controls could be located in a more central position, such as the keyboards or as part of the TIPS display quick action entry device.

2) To provide more counter space, the TAGS keyboard could be integrated with the TIPS and BRITE keyboards. An alternative solution is to provide a pull out surface from beneath the counter.

3) To eliminate the TAGS display shared by LC1 and GC1 with its compromised control features, a fourth display/channel could be provided. This display could be ceiling mounted at the LC1 station.

14.3.5 VFR Operation at O'Hare in the Late 1980's

The equipment layout and the controller positions for VFR operations are shown in Figure 14.3-6. Clearance Delivery and Flight Data are both seated at their TIPS consoles. All the post mounted TIPS displays have been tipped "face up" and rotated so as to provide the controllers access to their station consoles. During IFR operations, both local controllers would tip and rotate their TIPS displays in order to better position themselves to view both the TAGS and BRITE displays, Figure 14.3-5. The post mounted TIPS displays will tend to have controllers standing somewhat farther back from their stations than is current practice. The ability to tip and swivel the TIPS display requires this standback from the stations to only be a matter of inches. However, this standback may compromise the controller's ability to reach station controls and to view the ramp area traffic to some extent. Whether this would be the case or not at ORD was not determined in this study.

14.3.6 Overall O'Hare System Assessment

The equipment installation in an add-on fashion in the ORD tower cab appears acceptable with some reservations. In particular, counter space remaining to the four controllers along the south side of the tower cab for note taking and for personal use may not be sufficient. Controller requirements for counter space were not determined in this study.

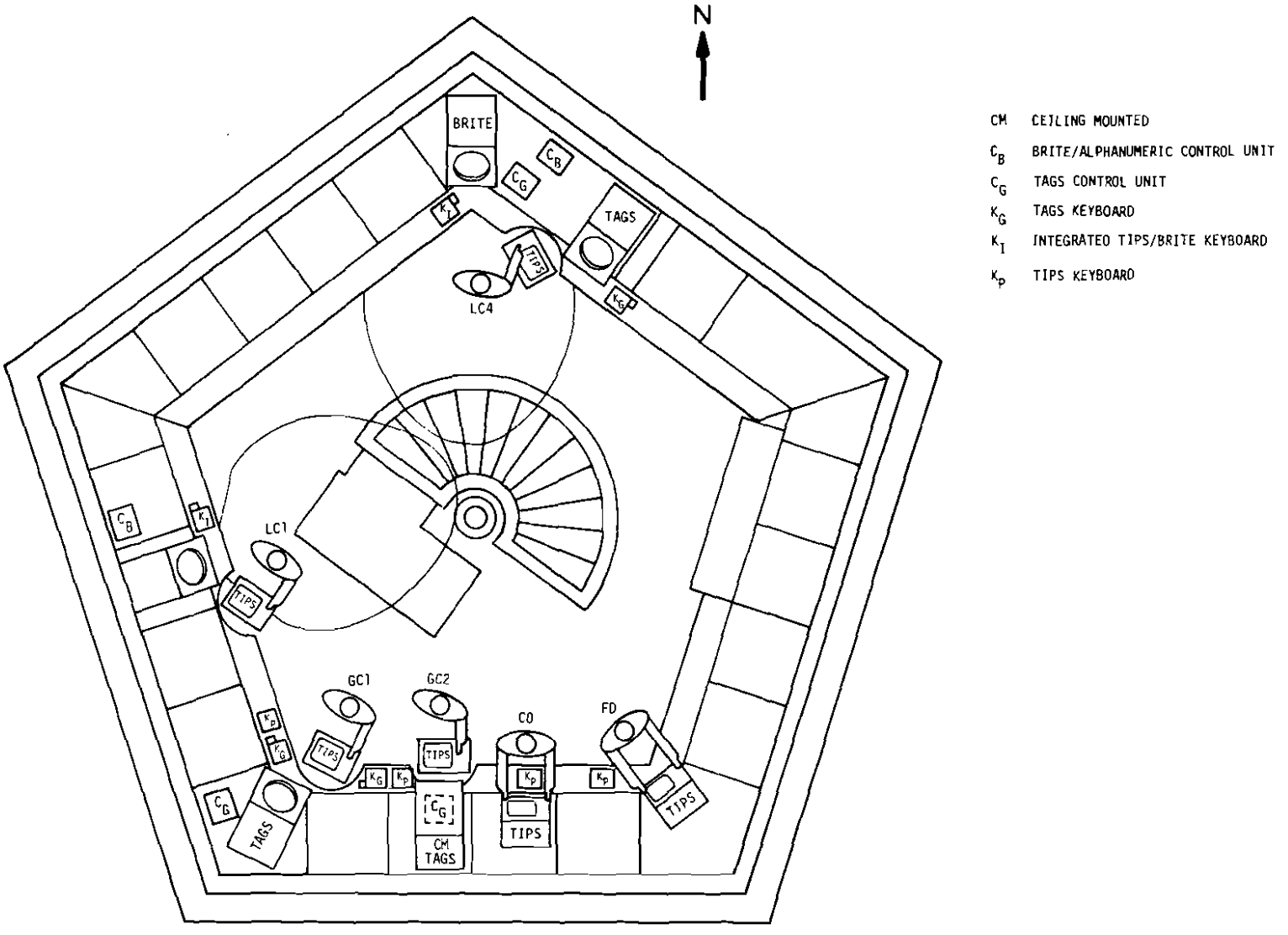

FIGURE 14.3-6. O'HARE VFR OPERATIONAL LAYOUT IN THE LATE 1980'S

14.4 ST. LOUIS (STL) CASE STUDY

14.4.1 Current Good Visibility Operation

The STL airport layout with the cab location is shown in Figure 14.4-1. The cab is a pentagon and is located on the southside of the airport. The parallel runways located in the center of the airport are used more heavily, about 90 percent of the time.[1] With arrivals from the East, 30R is used for both the arrival and departure of general aviation aircraft and 30L is used in the same mode (i.e. single runway mixed arrivals and departures) for air carrier operations. With arrivals from the West, 12L is operated in the single mixed mode for general aviation and 12R is used for air carriers. In addition to the single mixed mode, 12R is sometimes operated with departures from runway 6. The air carrier terminal is located East of the tower, while general aviation facilities are scattered about the airport. General aviation traffic represents a significant portion (32%) of the traffic at STL. Military operations out of the facilities shown in Figure 14.4-1 are relatively low in volume (4%). Current operations rates are shown in Table 14.4-1.

The controller stations are indicated in Figure 14.4-1. These are located in more detail along with the cab layout[7] in Figure 14.4-2. The area of responsibility for each control position which was assumed for this study is shown in Table 14.4-2. These were based upon the airport layout and runway configurations and were not discussed with local

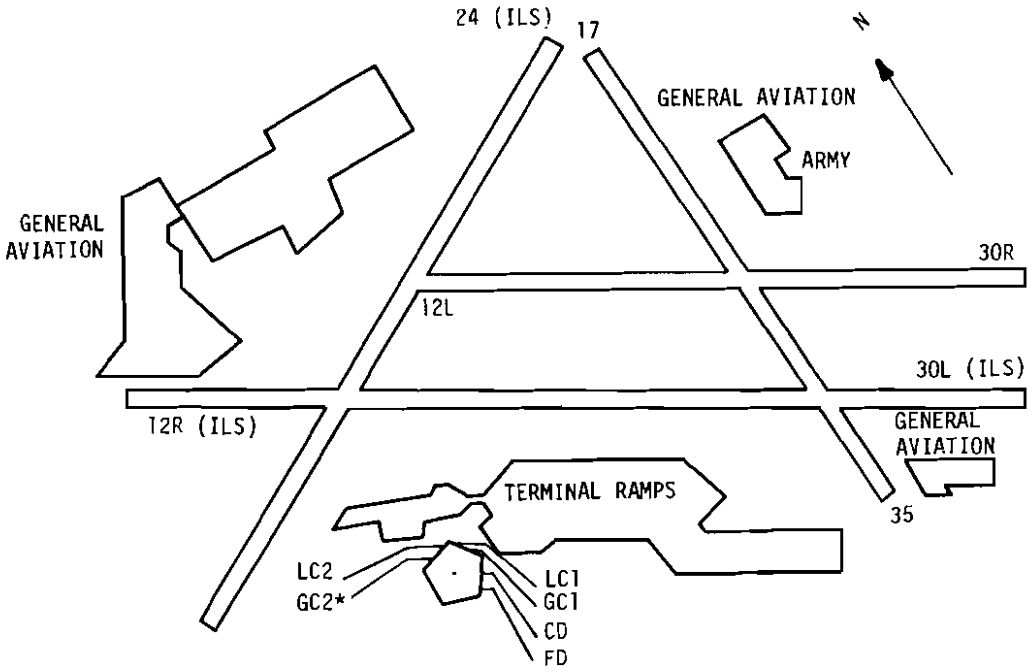

* NORMALLY NOT STAFFED

FIGURE 14.4-1. ST.LOUIS AIRPORT LAYOUT AND CAB LOCATION
(CAB NOT TO SCALE)

TABLE 14.4-1. ST. LOUIS OPERATIONS RATES - CURRENT AND FORECASTED

	1976	1987 [9]
Operations (000)		
Air Carrier	175	280
Air Taxi	29	60
Itinerant	320	413
Total	321	415
Instrument Approaches (000)	10	29

TABLE 14.4-2. ST. LOUIS CONTROLLER STAFFING

Control Position	Area of Responsibility
Local Control - 1 (LC1)	Air Carriers (12R/30L)
Local Control - 2 (LC2)	General Aviation (12L/30R)
Ground Control - 1 (GC1)	Primary Ground Control
Ground Control - 2 (GC2)*	General Aviation traffic taxiing North of 12R/30L
Clearance Delivery (CD)	
Flight Data (FD)	

*Authorized but not normally staffed.

TABLE 14.4-3. ST. LOUIS CONTROLLER MOVEMENT

Movement	Approximate Distance
Flight data to Clearance Delivery	7 FT
Clearance Delivery to Ground Control 1	5 FT
Clearance Delivery to Ground Control 2	14 FT
Ground Control 1 to Local Control 2	7 FT

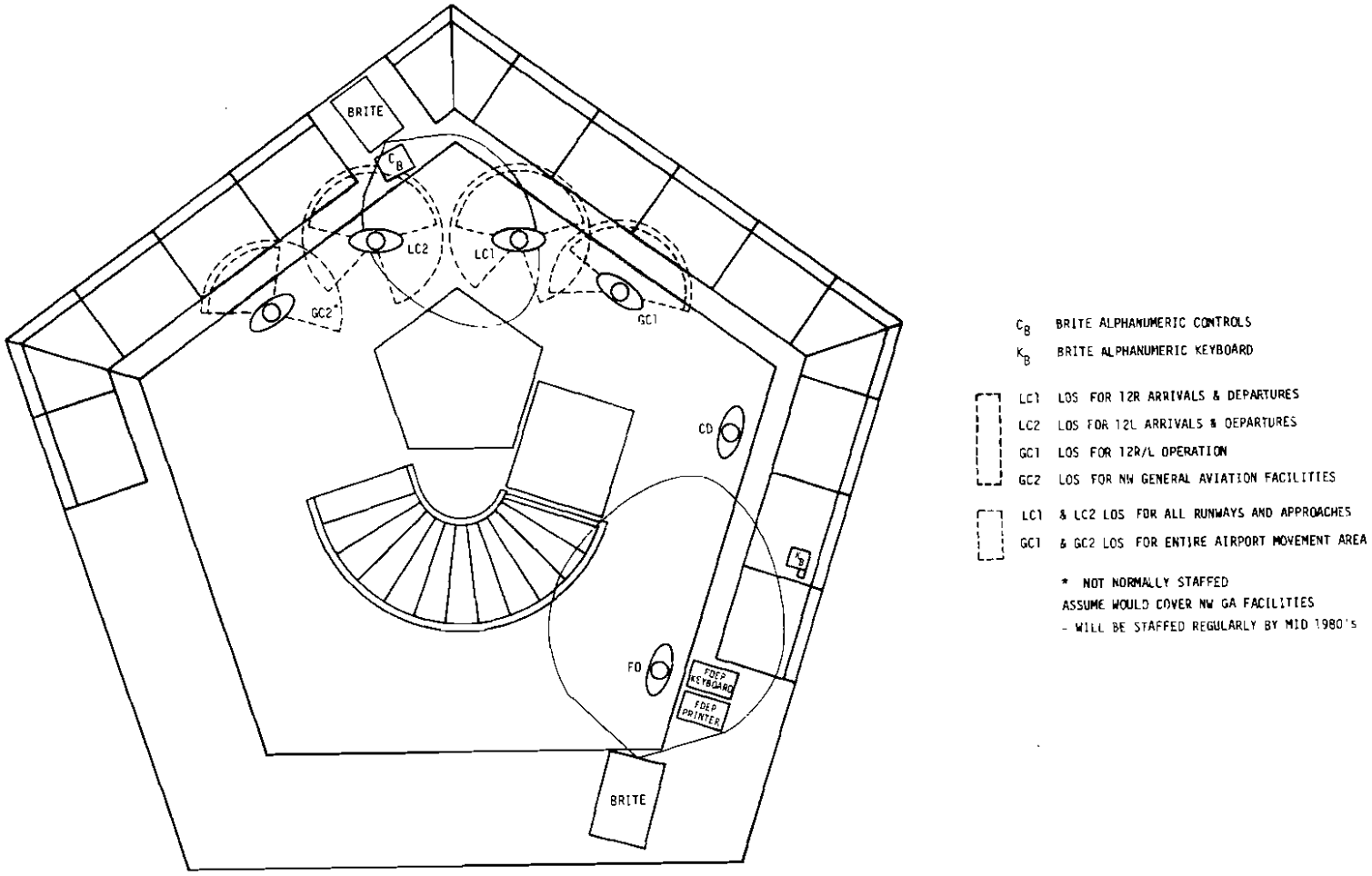

FIGURE 14.4-2. ST. LOUIS CAB LAYOUT AND VISUAL LINE-OF-SIGHT ASSUMPTIONS

tower personnel. Based upon the analysis in Appendix C, it was assumed that GC2 is not normally staffed, but is only used during unusually high traffic peaks.

From Figure 14.4-2, it can be seen that in the primary runway operation both local controllers have a good LOS. If departures are released off of runway 6, LC1 would probably issue the clearance since he controls 12R/30L, the intersecting air carrier runway. It appears that LC2 does not interfere with this LOS requirement but that GC2, if staffed, might interfere somewhat. When GC2 is not staffed, GC1 does not have clear LOS. Both local controllers stand in his way of the northwest general aviation facilities and their associated taxiways to 12L/30R. Either GC1 must walk over between LC1 and LC2 or LC2, assumed to be the general aviation local controller, could act as ground control for taking general aviation traffic in this area. It is assumed that GC2, who cannot see the air carrier terminal very well, would perform this general taxi function when staffed.

Two BRITE displays are installed in the tower cab. A BRITE-1 is pedestal mounted from the counter in the North corner of the cab and is shared by the two local controllers. The BRITE-1 has a 12-inch diameter tube versus the 16-inch tube of the BRITE-2 and BRITE-4. The unit is smaller overall and is shown as such. In addition, due to the smaller picture (alphanumeric height), the viewing area

"foot print" is also scaled down from that shown in Figure 14.2-3. Nevertheless, the viewing area appears acceptable for shared local controller use.

The other BRITE display is a BRITE-2 located on the counter at the Flight Data position. This unit permits use of the preview area for ARTS data interchange. For example, STL is a TCA (Group II) and may use this interface for VFR beacon code assignment. The ARTS keyboard is shown between FD and CD. It sits on the console and can be moved. The BRITE viewing area permits use by either FD or CD.

From Figure 14.4-2 it can be seen that the flight strip flow requires a good deal of controller movement. The extent of this movement is estimated from the cab layout[7] and is shown in Table 14.4-3. The problem is particularly acute when GC2 is staffed. As at Los Angeles, STL may not use flight strips at the GC2 position and instead may rely solely on a scratch pad.

14.4.2 Current Poor Visibility Operation

St. Louis experiences visibility conditions which impact on airport surface surveillance about 1.3% of the time. This figure is taken from Reference 4 and covers visibilities of less than 1 mile between the hours of 0700 and 2100. Despite this low percentage this represents approximately 66 hours each year. St. Louis is not Category II landing system equipped.

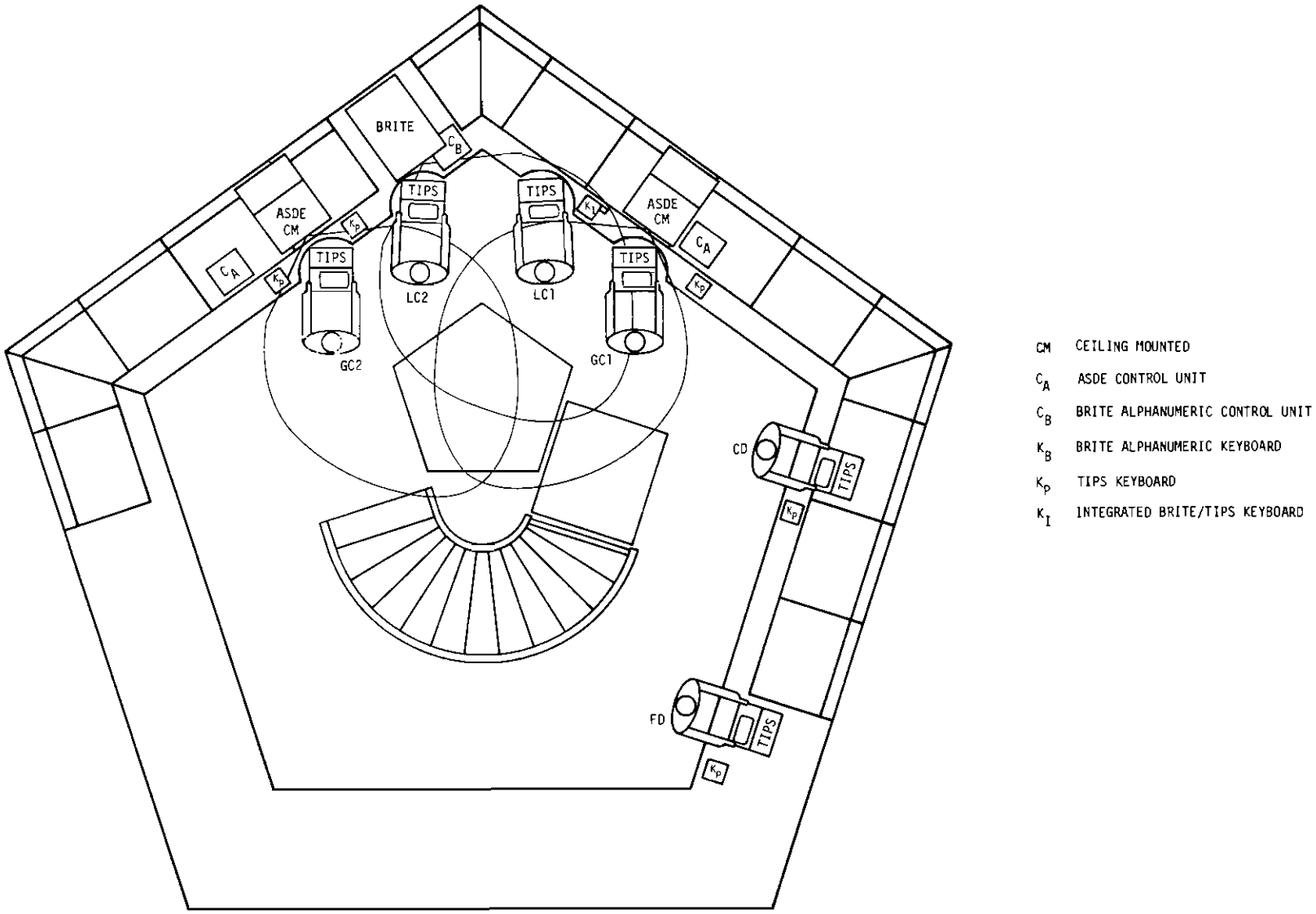

FIGURE 14.4-3 ST. LOUIS IFR OPERATIONAL LAYOUT IN THE LATE 1980's

STL does not have an ASDE-2 radar. In poor visibility conditions the controllers must rely on pilot position reports by radio voice communication. The cab viewing areas and controller locations would remain as shown in Figure 14.4-2.

14.4.3 Future St. Louis Operation

The forecasted STL operations rates are given in Table 14.4-1. A large amount of growth is estimated (29 percent overall) with the greatest increase in air carrier operations (60 percent). To satisfy this demand it is expected that runway 12L/30R will be extended to permit air carrier operations.[8] The 12L/R or 30L/R runways could then be operated in a dual lane mode for air carriers or in the single mixed mode as they are today with air carriers on both runways. In either case, no more than the two current local control positions would be required.

With total itinerant operations of 413,000, the GC2 position will be staffed more frequently than at present. With air carrier plus air taxi operations exceeding 320,000 per year, the use of GC2 for general aviation alone may not be possible. If GC2 is to control air carrier and air taxi operations in the terminal/ramp area and adjoining taxiways, it may be necessary to locate him on the northeast face of the cab to provide the required LOS. However, in this study GC2 was kept at its current station rather than to invent a new cab layout.

The major cab related equipment planned for STL is given in Table 12.4-2. The DDC units associated with TAGS, TIPS, and the BRITE alphanumeric equipment are considered.

14.4.4 STL Operation in the Late 1980's

14.4.4.1 Equipment Installation

The equipment layout and controller viewing areas for the STL cab in the late 1980's are shown in Figure 14.4-3. A BRITE-4 has been shown replacing the BRITE-1. The BRITE which is now used by FD or CD is not shown since TIPS would provide this ARTS interface. The TIPS display for FD is shown console-mounted in the space made available by removing the FDEP. The TIPS display for CD is also console mounted in the space currently occupied by the flight strip trays. The four other TIPS displays are pedestal mounted from the floor and cut into the counter. All TIPS keyboards are simply sitting on the counter.

Two ASDE-3 displays are shown, each shared by a local and ground controller. The displays are hung from the ceiling since console space is not currently available. Each display is assumed to be an independent channel. The associated controls are console-mounted in space made available by the removal of flight strip trays. Thus, this configuration is dependent upon TIPS being installed before or at the same time as ASDE-3. However, the dependence

is not serious since if ASDE-3 precedes TIPS, the ASDE-3 controls can simply be seated on the counter as are the BRITE controls. Without TIPS there is a lot of counter space.

14.4.4.2 Equipment Impact on Poor Visibility Operations

The addition of the MSDPs equipment has the following effects:

Positive Aspects

1) Controllers are provided surface surveillance via ASDE-3 to assist them under poor cab visibility conditions.

2) Inter-controller hand-off of flight data is facilitated by TIPS. Excessive controller movement is eliminated.

Negative Aspects

Sharing the ASDE channels between local and ground control limits the effective use of the "two presentation" select feature. Figure 14.4-4 shows how the two channels might be set up and also an option that the ground controllers might prefer. With the channels and displays shared by Ground and Local Control this option is not available. In fact, since the two channels would probably be set up so similarly, one ASDE channel with two displays might be just as effective at St. Louis.

One solution to the problem is added ASDE-3 displays and display channels. But the expense of this solution for equipment which is used only a small fraction of the time is questionable. If the cab should be reconfigured with GC2

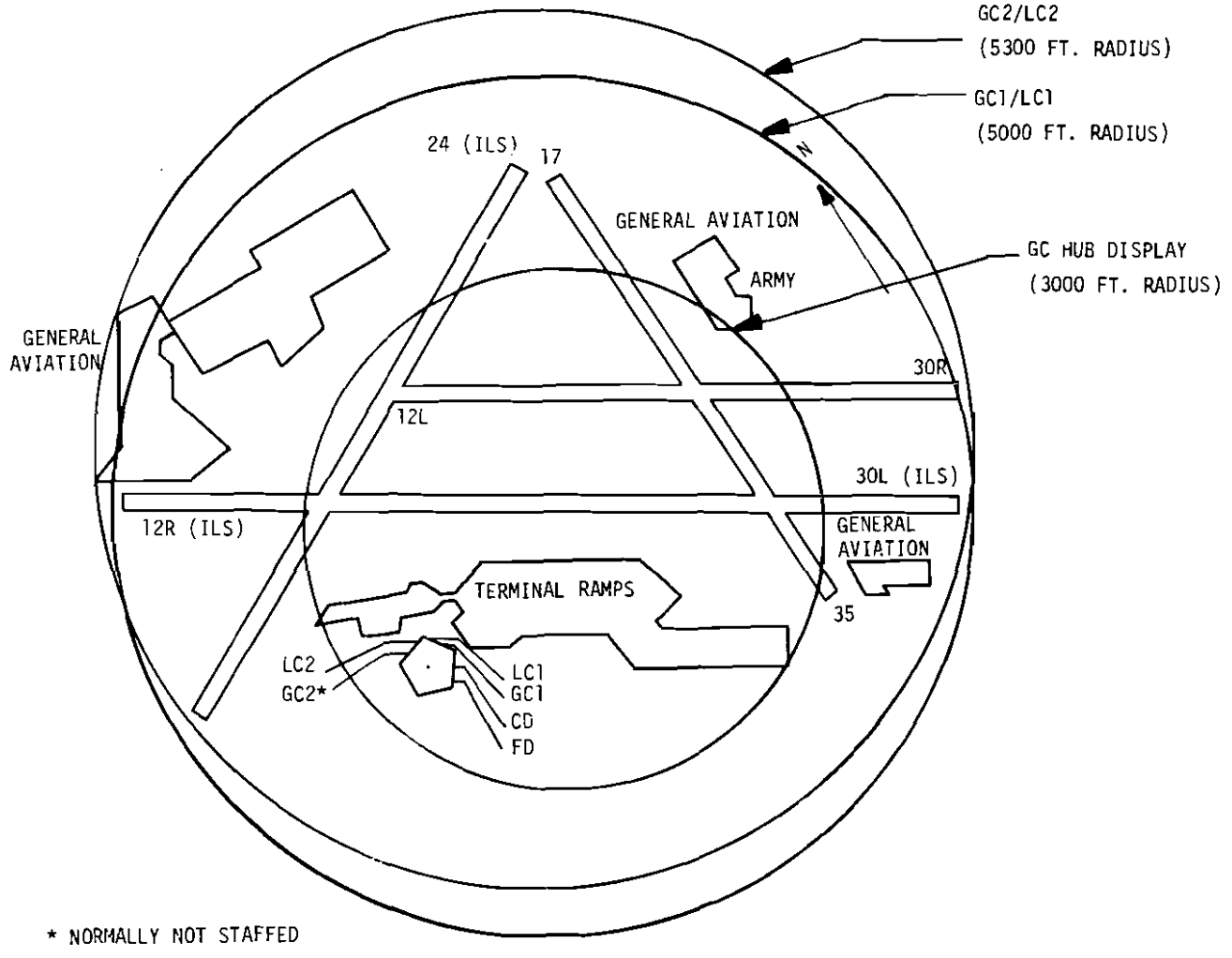

FIGURE 14.4-4. ASDE DISPLAY SETUP AT ST. LOUIS AIRPORT FOR 2 CHANNELS

located on the northeast side of the cab beside GC1 for a better view of the air carrier ramps, a channel for the two ground controllers and a channel for the two local controllers would be an improvement permitting better range and offset selection.

14.4.4.3 Equipment Impact on VFR Operations

The equipment layout and controller stations for the STL cab with controllers positioned for VFR operation are shown in Figure 14.4-5. As previously mentioned, all excessive controller movement to provide flight strip hand-offs is eliminated by TIPS. Clearance Delivery and Flight Data are both seated at their TIPS console. The TIPS displays at the four other positions may be tipped and rotated to permit the adherence to the current VFR locations. In addition, this flexibility provided by the pedestal mount can be used to facilitate reaching console located controls.

14.4.5 Overall System Assessment

The equipment installation in a more or less add-on fashion appears acceptable. TIPS has a very beneficial effect on the operation by reducing the excessive controller movement which would otherwise be required to pass flight strips. Only the ASDE-3 "two presentation" select feature is compromised due to Local and Ground Control sharing an ASDE-3 channel and this problem is considered minor.

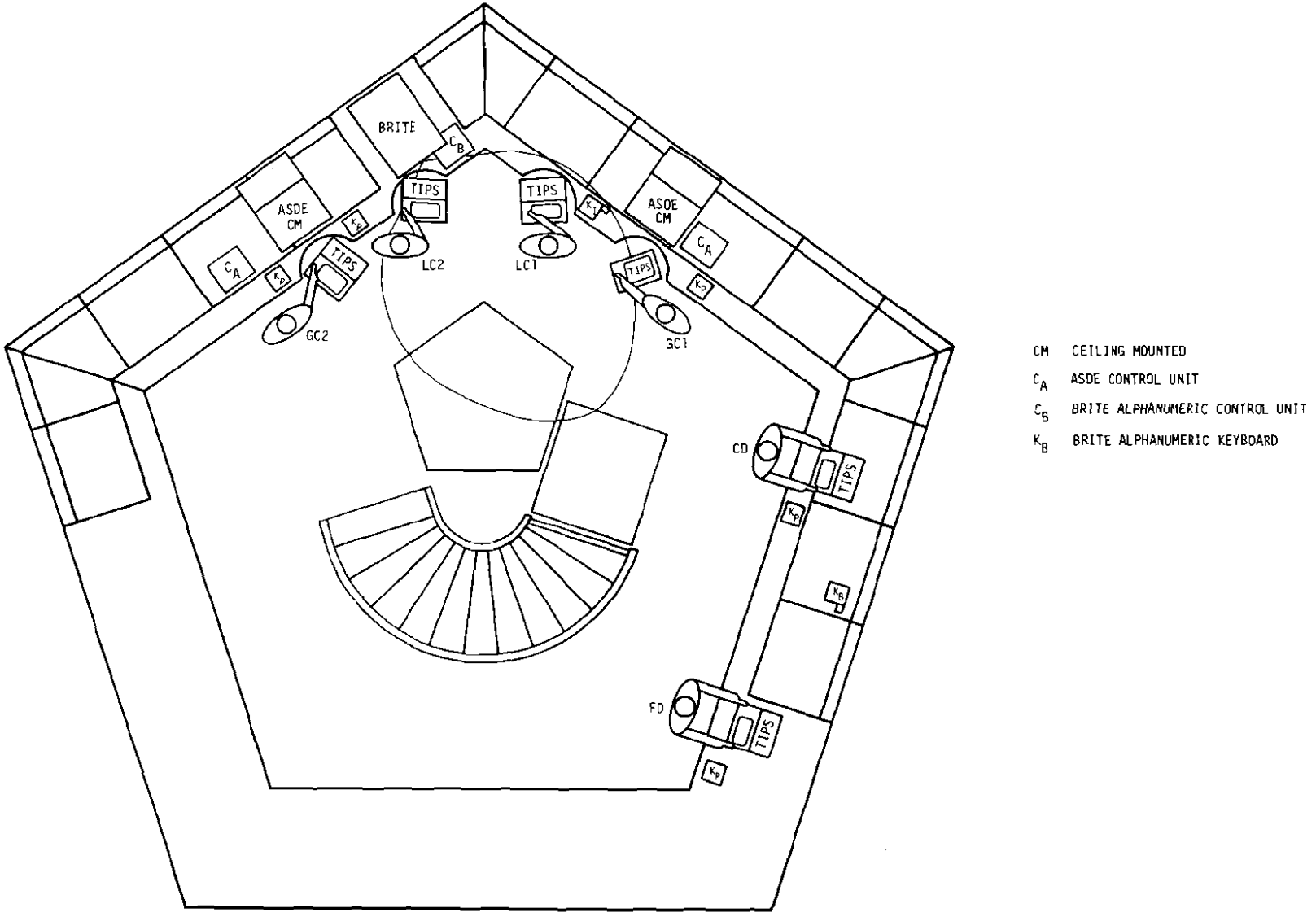

FIGURE 14.4-5. ST. LOUIS VFR OPERATIONAL LAYOUT IN THE LATE 1980's

14.5 BOSTON LOGAN INTERNATIONAL AIRPORT (BOS) CASE STUDY

14.5.1 Current Good Visibility Operation

The BOS airport layout with the tower cab location is shown in Figure 14.5-1. The cab is eleven sided and is located on the west side of the airport adjacent to the airline terminal facilities. The airport utilizes a number of different runway configurations. The primary configuration is arrivals on 4L and 4R and departures on 4R and 9, which is used about 40 percent of the time[1]. The airport has relatively few general aviation and military operations, being only 9 percent and 1 percent of the total traffic respectively[1]. Current operations rates are shown in Table 14.5-1. Helicopters operate from the helicopter pad adjacent to the General Aviation facilities as indicated in Figure 14.5-1.

The controller stations are shown in Figure 14.5-1. They are located in more detail along with the cab layout[10] in Figure 14.5-2. The area of responsibility for each control position is given in Table 14.5-2. Skyway control (SC) is a position unique to BOS. This position is responsible for airport helicopter pad traffic and for separating the low flying aircraft over the Boston Metropolitan Area, which are used by various local radio stations to report on "rush hour" highway traffic. SC is only staffed during the morning and evening rush hours. Local Control (LC) has the option of

TABLE 14.5-1. LOGAN OPERATIONS RATES - CURRENT AND FORECASTED

	1977 [9]	1987 [9]
Operations (000)		
Air Carrier	224	314
Air Taxi	23	35
Itinerant	291	420
Total	295	420
Instrument Approaches (000)	21	30

TABLE 14.5-2. LOGAN CONTROLLER STAFFING

Control Function	Control Station	Area of Responsibility
Local Control	LC1 or LC2	All runways/approaches
Skyway Control	Vacant Local Control station-either LC1 or LC2	Helicopter pad and "rush hour" highway surveillance aircraft
Ground Control	GC	All taxiways
Clearance Delivery	CD	
Flight Data	FD	

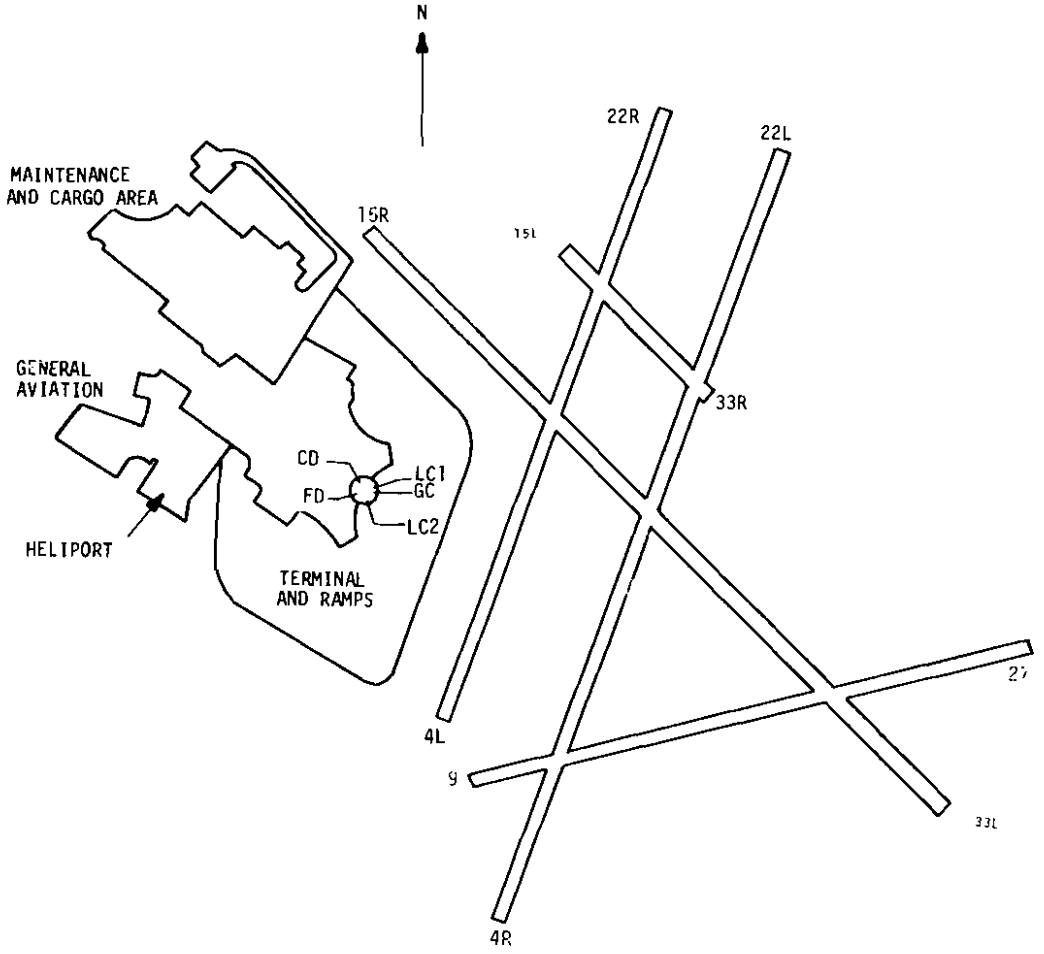

FIGURE 14.5-1. LOGAN AIRPORT LAYOUT AND CAB LOCATION (CAB NOT TO SCALE)

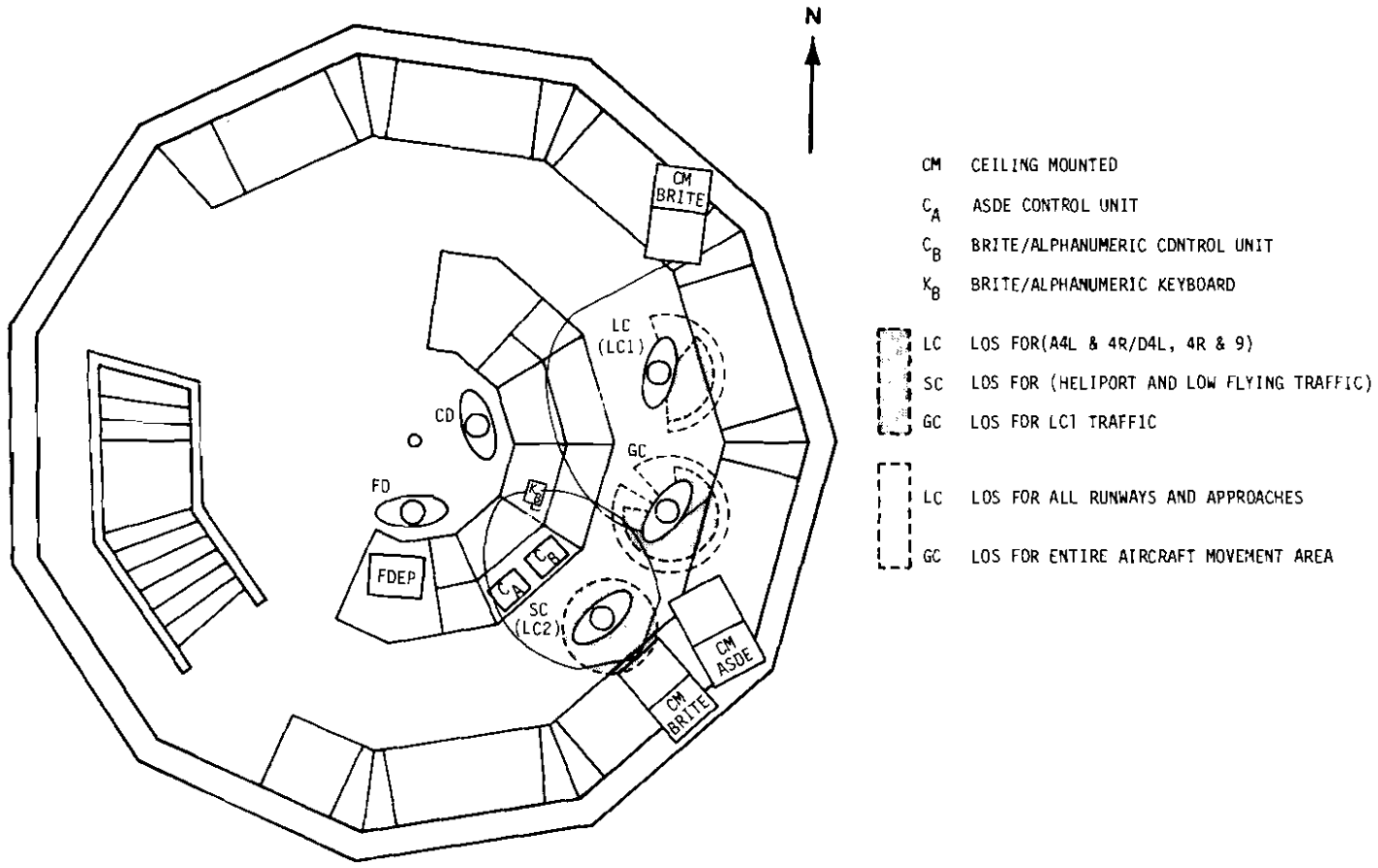

FIGURE 14.5-2. LOGAN INTERNATIONAL AIRPORT CAB LAYOUT AND VISUAL LINE-OF-SIGHT ASSUMPTIONS

standing his watch at either station LC1 or LC2. SC stands his watch at the unoccupied Local Control station. For this analysis, Local Control is positioned at the LC1 station and Skyway Control is positioned at the LC2 station.

From Figure 14.5-2, it is seen that LC has a good LOS of the airport's runways and approaches. GC requires almost a full 360-degree LOS capability in order to pick up traffic coming out of the General Aviation Area and the Maintenance and Cargo Area. To reduce potential LOS problems, GC has been stationed on the east side of the tower cab in good view of the primary traffic areas. SC requires a 360 degree LOS although his primary surveillance area is located to the west of the tower cab in the direction of the airport helicopter pad and Boston. LOS requirements may not be critical for SC since his primary surveillance activity is with low flying aircraft in the terminal area for which he uses the BRITE display. The controllers do not appear to have any significant LOS problems.

The tower cab has 3 surveillance displays - a BRITE-1, a BRITE-4 and a 16-inch Conrac monitor. These displays are interchangeable between ASR and ASDE modes. All three displays are ceiling mounted. In Figure 14.5-2:

- The display labeled "CONBRITE" located next to the LC1 station is the BRITE-4 and for the purposes of this analysis is assumed to be in the

ASR mode.

- The display labeled "CONASDE" is the Conrac monitor and for the purposes of this analysis is assumed to the in the ASDE mode.
- The display labeled "CONBRITE" over the LC2 station is the BRITE-1 and for the purpose of this analysis is assumed to be in the ASR mode.

The display viewing areas for LC and SC appear to be acceptable.

In Figure 14.5-2, it is seen that both FD and CD are located at an island immediately behind the LC, GC, and SC positions. This arrangement permits an excellent flight strip routing system that eliminates any need for controllers to leave their stations in order to handoff flight strips. CD hands off flight strips to GC by putting the strips into a flight strip receiving tray located in the island facet behind GC. GC takes the strips, turns around and places them into the tray at his station.

14.5.2 Current Poor Visibility Operation

BOS experiences visibility conditions which impact on airport surveillance about 2.9 percent of the time.[4] This percentage represents all visibilities of less than one mile between 0700 and 2100. This condition occurs approximately 148 hours each year. BOS does not have a Category II landing

capability.

Figure 14.5-3 shows the position of the controllers at their stations during poor visibility operations and the BRITE and ASDE display viewing areas. The ASDE display is oriented so all three controllers can use it. LC can move closer to GC and position himself in the intersection of the BRITE and ASDE display viewing areas. If SC requires to see the ASDE, he also can shift his position so as to stand at the intersection of the two display viewing areas as shown in Figure 14.5-3. Being a shared display, the quick look and two presentation select features of ASDE will be of limited usefulness.

14.5.3 Future Logan Operation

The forecasted BOS operations rates are presented in Table 14.5-1. A large amount of growth is anticipated (42 percent overall) with the greatest increase being in air carrier operations (40 percent). To accommodate this growth to 420,000 annual itinerant operations, a second Ground Control position will have to be created and staffed. Considering the spaciousness of the current GC station and the philosophy adopted in this section of minimizing the impact of future changes, this analysis has assumed that the current GC station will be outfitted to accommodate two ground controllers (GC1 and GC2). Theoretically, the current runway complex and local controller staffing are adequate to handle this growth. If increased Local Control staffing is

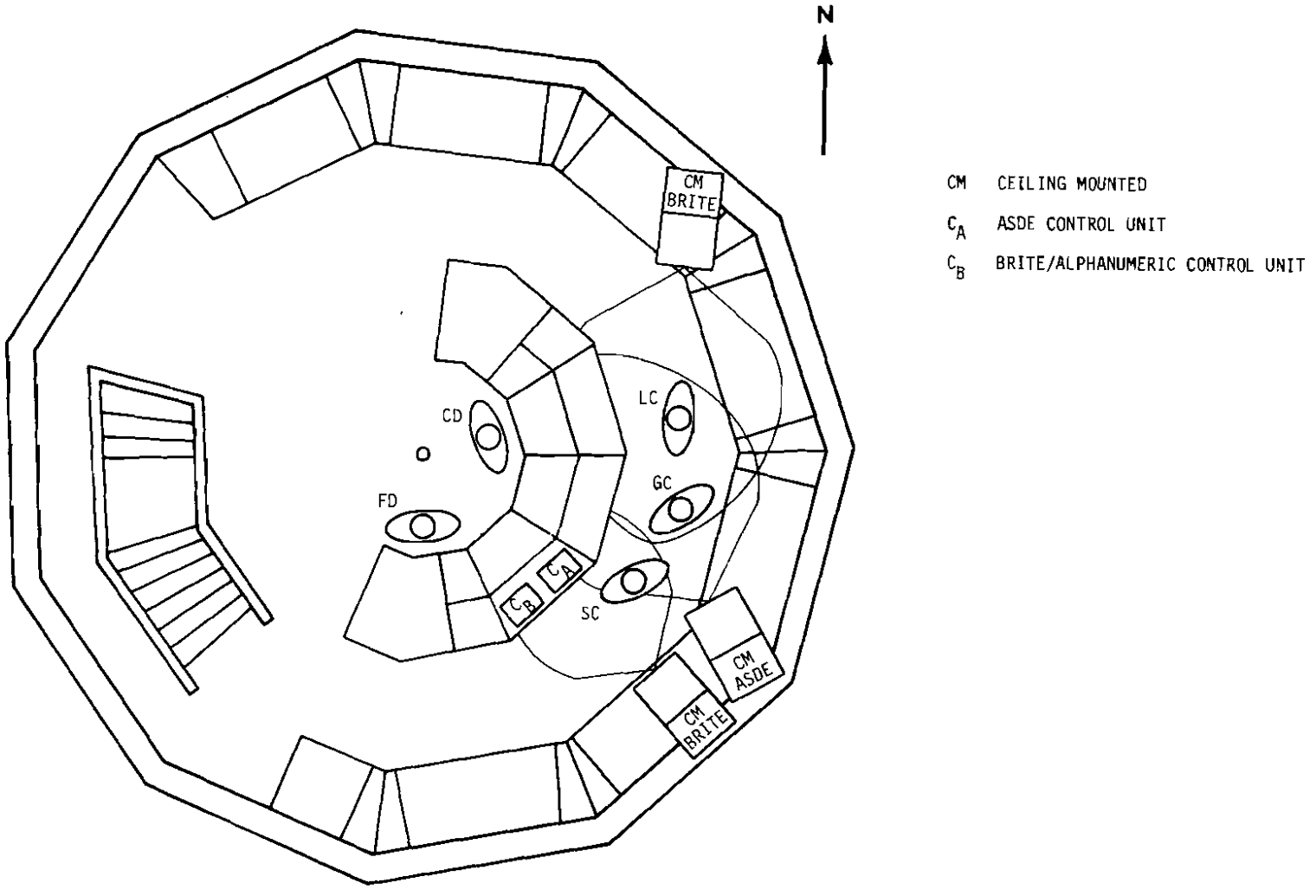

FIGURE 14.5-3. LOGAN INTERNATIONAL AIRPORT CURRENT IFR OPERATIONAL LAYOUT

found to be required, the second Local Control station will be staffed and Skyway Control will be repositioned. However, for the purposes of this analysis it was assumed that the current Local Control and Skyway Control staffing will remain unchanged.

The major cab related equipment planned for BOS is given in Table 12.4-2. The DDC units associated with ASDE, TIPS, and the BRITE Alphanumeric equipment are considered.

14.5.4 Logan Operation in the Late 1980's

14.5.4.1 Equipment Installation - The concept of pedestal mounting the TIPS displays on the floor in front of the controller's consoles, so as to avoid the need to modify the consoles in order to accommodate the TIPS displays, can not be applied to the BOS tower cab. The lack of station counters and the nearness of the island to the Local and Ground Control stations makes this scheme impractical. Figure 14.5-4 shows the current LC1 station equipment layout and the proposed layout which incorporates the TIPS display and keyboard. The stripboards are removed and replaced by the console's binocular well and ashtray and coffee cup well. In addition, the flight strip podium from the center of the console is removed. The remainder of the current console equipment layout remains the same. Figure 14.5-5 shows the current and modified LC2 station. The modifications are the same as in the LC1 case.

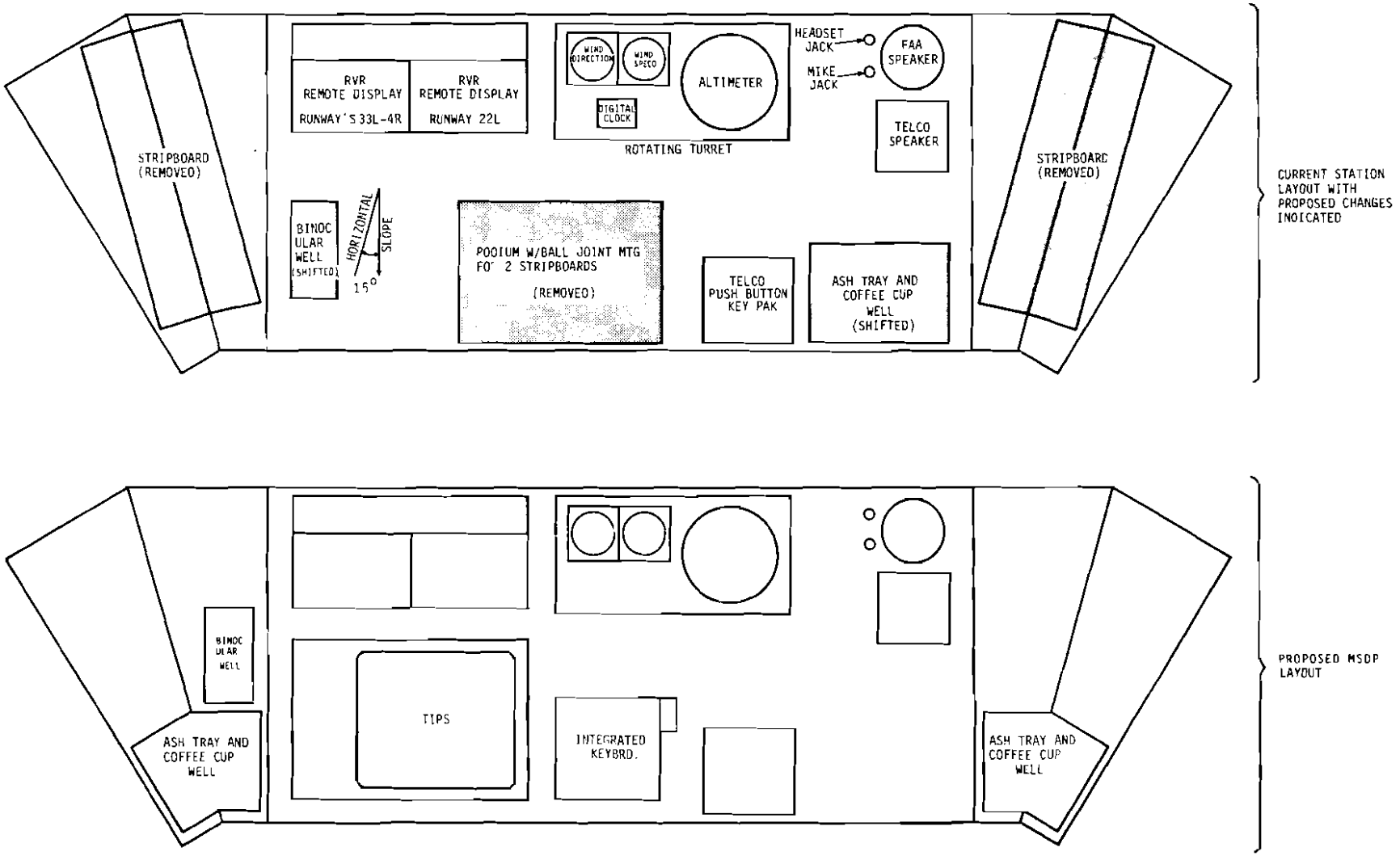

FIGURE 14.5-4 CURRENT/PROPOSED MSDP LAYOUT FOR LC-1 STATION

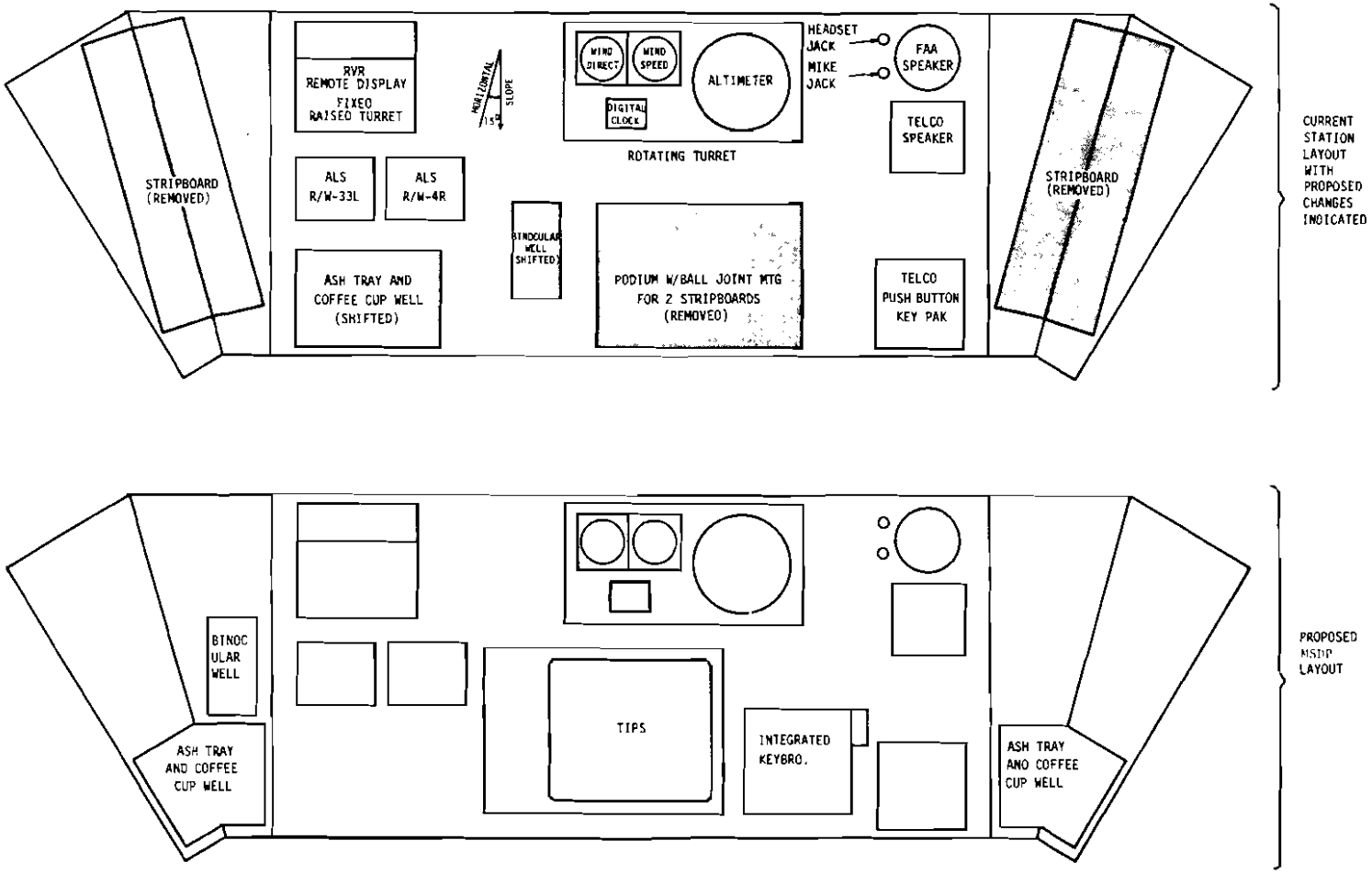

FIGURE 14.5-5. CURRENT/PROPOSED MSDP LAYOUT FOR LC-2 STATION

Figure 14.5-6 shows the current Ground Control station layout and the proposed combined GC1 and GC2 station equipment layout. To accomodate the second control position, duplicate mike and headset jacks, FAA/TELCO speakers and TELCO pushbutton keyback are installed. To accommodate the TIPS keyboards, a counter is added to the dual station. The equipment layout of these stations and for the entire cab, including the controller viewing areas, are shown in Figure 14.5-7. The TIPS display/keyboard for FD is shown replacing the desk top FDEP. CD has a console mounted TIPS display/keyboard. To reduce the number of keyboards for Local and Skyway Control the TIPS keyboard is assumed to be integrated with the BRITE keyboard at those positions.

Since four controllers will be unable to share a single ASDE display, a second ASDE channel/display is added. The two ASDE displays are ceiling mounted at the corners of the dual Ground Control station. One display is to be shared by GC1 and LC and the second display is to be shared by GC2 and SC. The ASDE control units are located in the island across from the displays. The original unit maintains its current location and the new control unit is in an area currently unoccupied.

The BRITE-4 display remains in its current location next to the LC1 station. A second BRITE-4 display replaces the BRITE-1 unit and is shifted to the corner of the LC2 station. The BRITE control units are located in the same

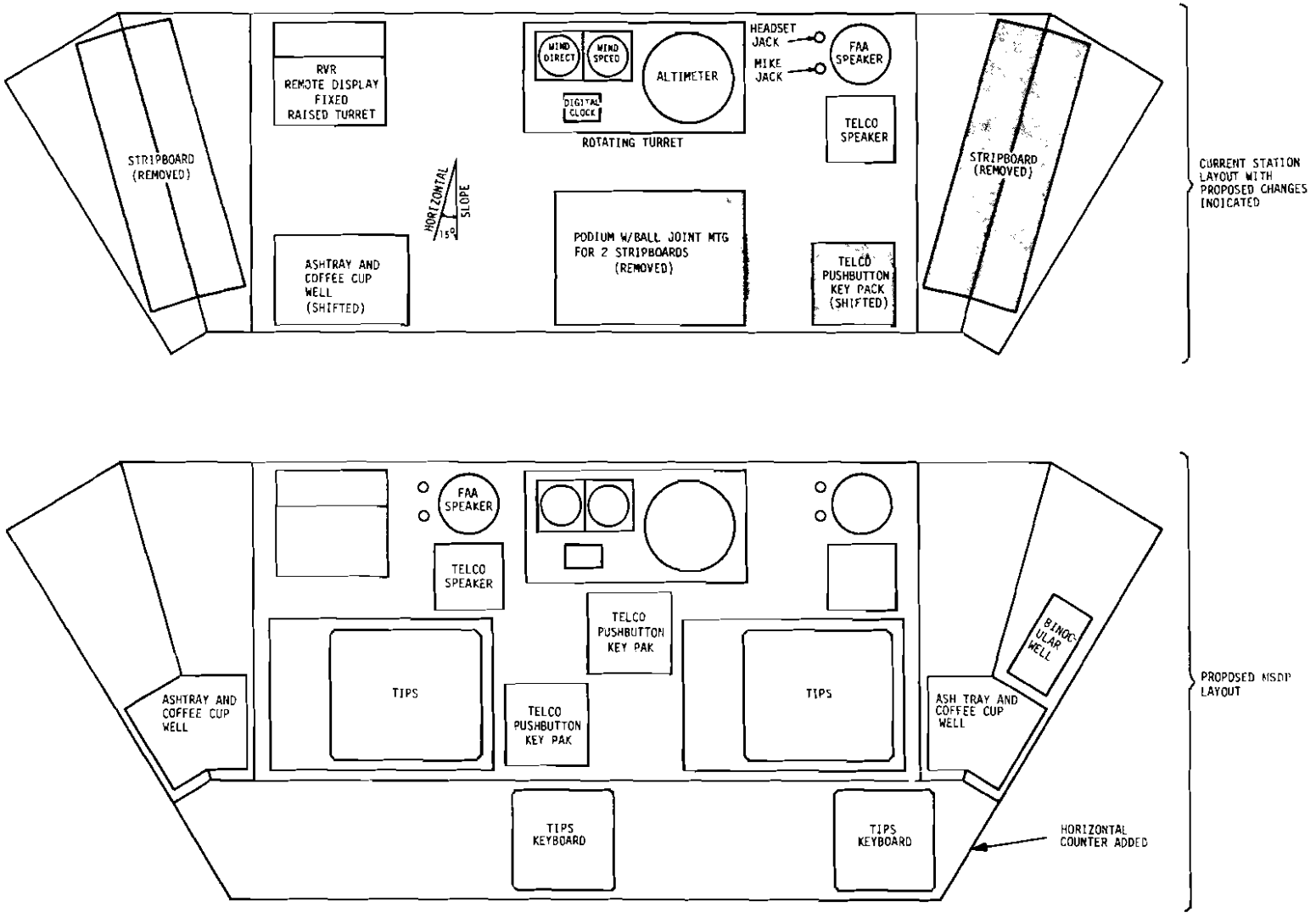

FIGURE 14.5-6. CURRENT GC STATION/PROPOSED MSDP GC-1 AND GC-2 STATIONS

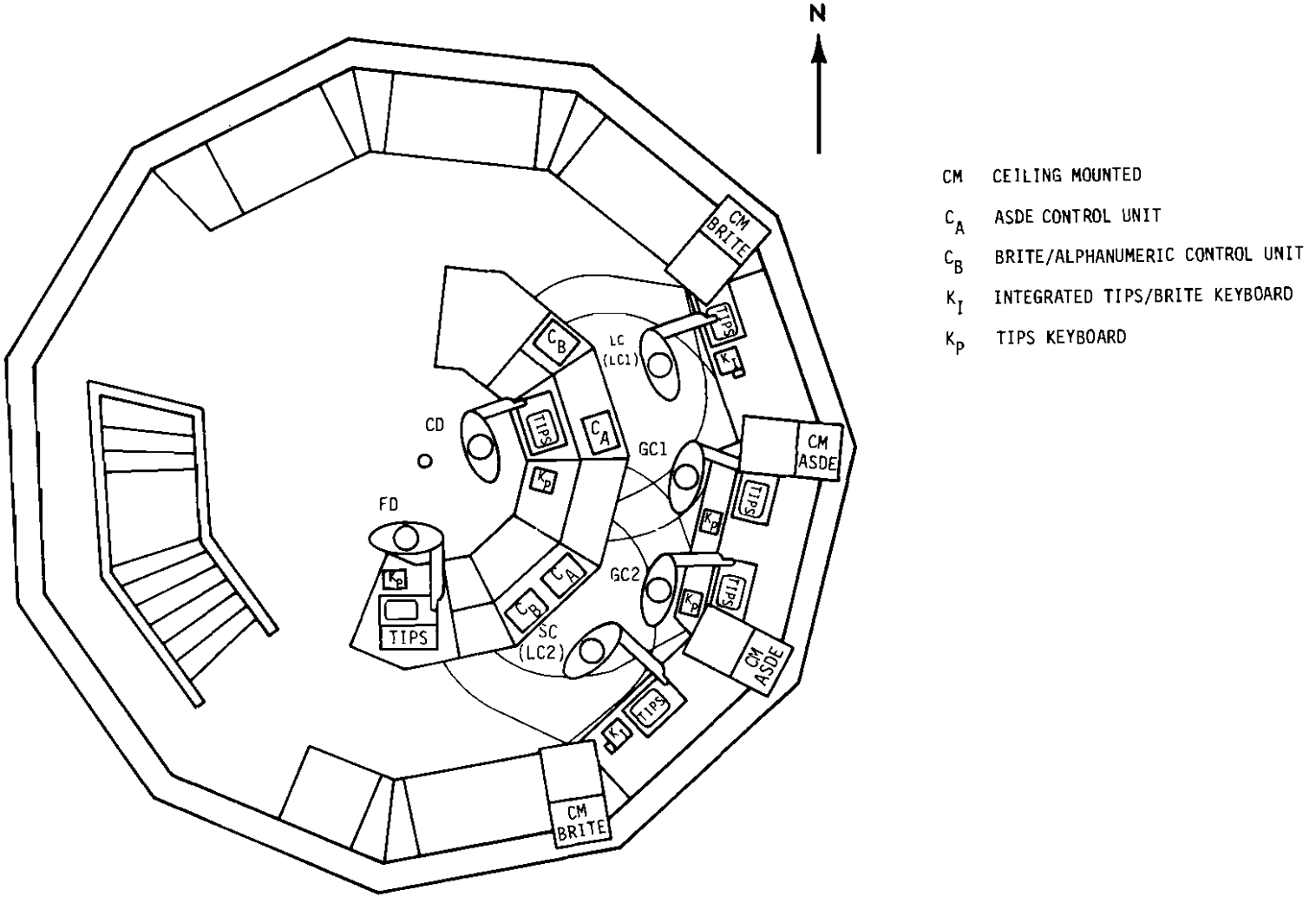

FIGURE 14.5-7. LOGAN INTERNATIONAL AIRPORT IFR OPERATIONAL LAYOUT IN THE LATE 1980's

manner described for the ASDE control units. The BRITE keyboards are assumed to be integrated with the TIPS keyboards and positioned in the consoles near the displays.

14.5.4.2 Equipment Impact on Future Logan Operation - It is estimated that the addition of the MSPDs equipment in the manner just described would have the following operational impact:

Positive Aspects

TIPS provides flight data at the controller stations on arrivals as well as on departures.

Negative Aspects

1) The ASDE displays shared by GC1/LC and by GC2/SC compromise the display presentations and the utilization of displays quick look and two presentation select features. Figure 14.5-8 shows the range and offset setups for both shared ASDE displays. The coverages are in keeping with the areas of responsibility of the display's viewers. Having the dominant responsibility LC will set up one display to suit his needs. In addition, if SC has Local Control responsibilities. he will set up the second ASDE channel to suit his coverage requirements. Depending on which runways are in operation, these coverages can be extensive. However, both ground controllers at times prefer

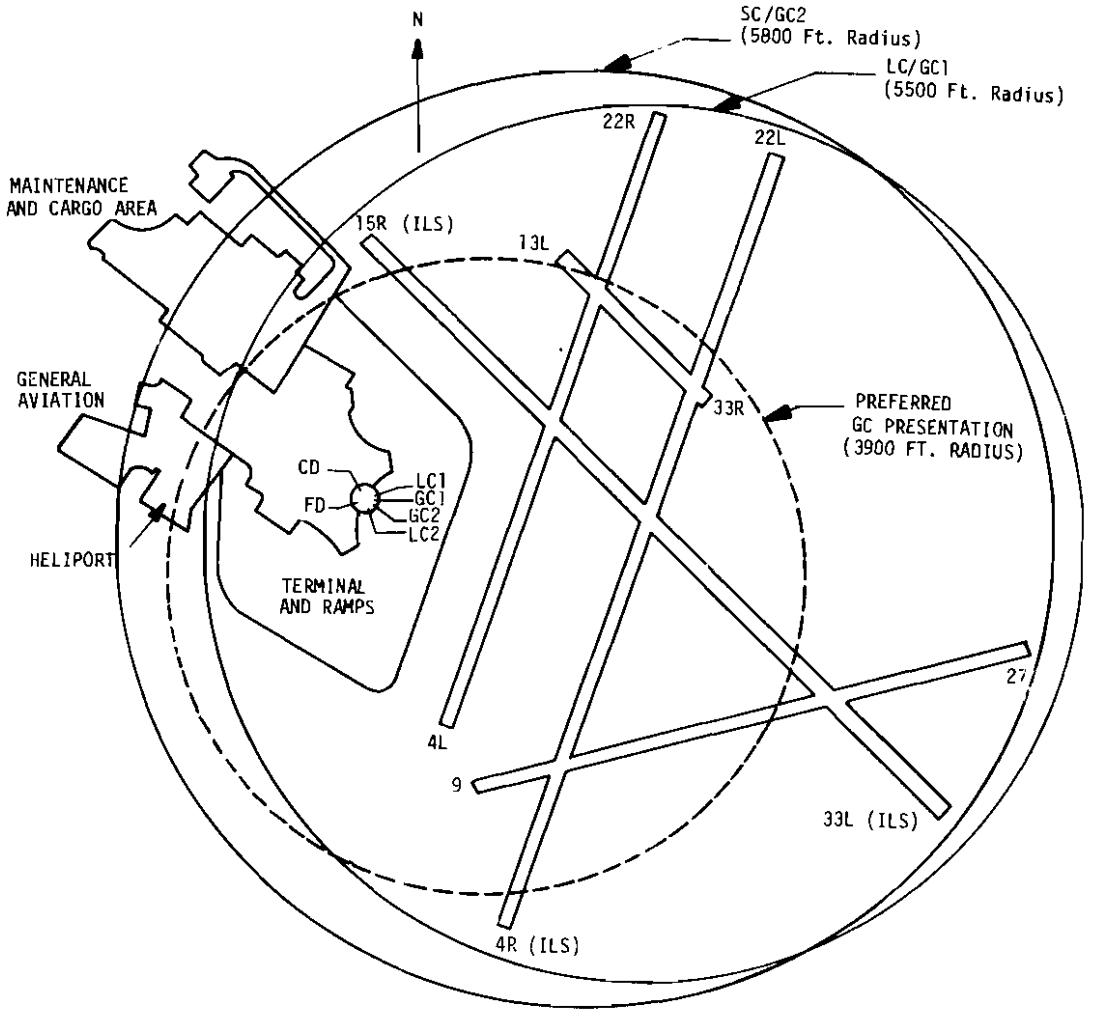

FIGURE 14.5-8. ASDE DISPLAY SETUPS AT LOGAN

a more compact presentation focused on the hub of traffic around the terminal area. This more compact coverage is shown by the dashed circle in Figure 14.5-8.

2) The two GC stations may be somewhat cramped.

In response to the negative aspects of the equipment installation hypothesized in Figure 14.5-7, several options have been defined:

1) To eliminate the ASDE display/channel shared by LC and GC1 with its compromised control features, a third display/channel could be provided. This display could be ceiling mounted in a double yoke with the BRITE display next to the LC1 station. To continue to permit Local Control the option of standing his watch at either the LC1 or LC2 station, a fourth ASDE display/channel would be required. This unit could be ceiling mounted in a double yoke with the BRITE display at the LC2 station.

2) If the dual Ground Control station is cramped, this problem should be attributed to the manner of intergrating the second GC station into the cab and not to the integration of the MSDPs equipment.

14.5.5 VFR Operation at Logan in the Late 1980's

The equipment layout and the controller positions for VFR operations are shown in Figure 14.5-9. As indicated, only the original ground controller is shifted from his current

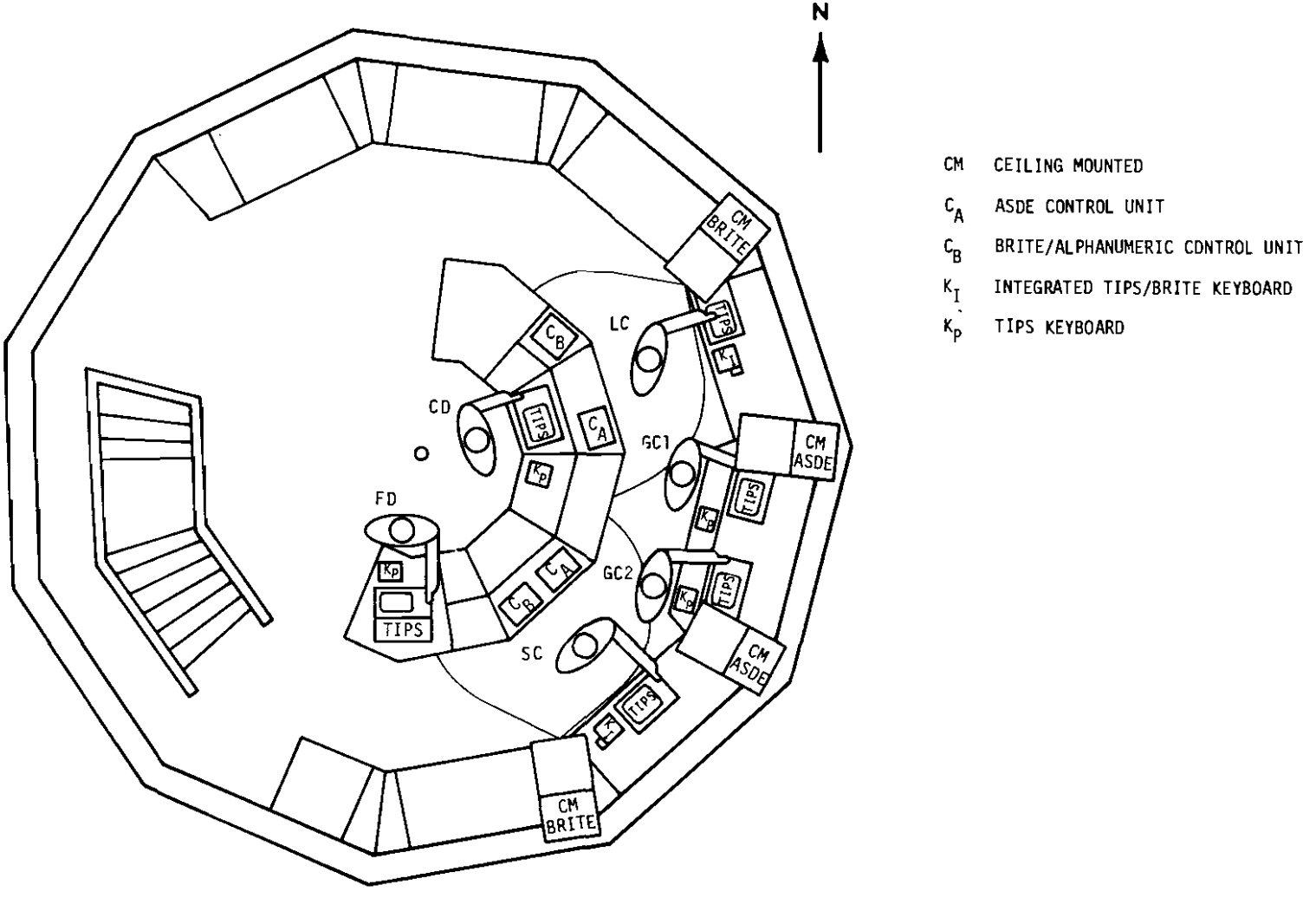

FIGURE 14.5-9. LOGAN AIRPORT VFR OPERATIONAL LAYOUT IN THE LATE 1980'S

location in order to make room for the added ground controller. Since TIPS is console mounted, all other controllers will remain in their current locations.

14.5.6 Overall Logan System Assessment

The current cab layout at BOS permits a good operation with no significant flight strip routing, line-of-sight, or display viewing problems. The BRITE and ASDE equipment can be installed at BOS in an add-on fashion. However, due to the central island arrangement of the cab's layout, TIPS must be integrated into the controller consoles. Due to the relatively large controller consoles at BOS, this integration appears to be straightforward.

14.6 BEDFORD HANSCOM FIELD (BED) CASE STUDY

14.6.1 Current Good Visibility Operation

The BED airport layout with tower cab location is shown in Figure 14.6-1. The cab is six sided and is located on the south side of the airport. The dominant runway configuration is arrivals and departures on runway 29 [11] The airport is predominantly a general aviation facility with some military, air carrier, and air taxi operations. Current operations rates are shown in Table 14.6-1.

The controller stations are shown in Figure 14.6-1. They are located in more detail along with the cab layout in Figure 14.6-2. The cab layout is based on photographs of the cab's interior and a few field measurements. The result-

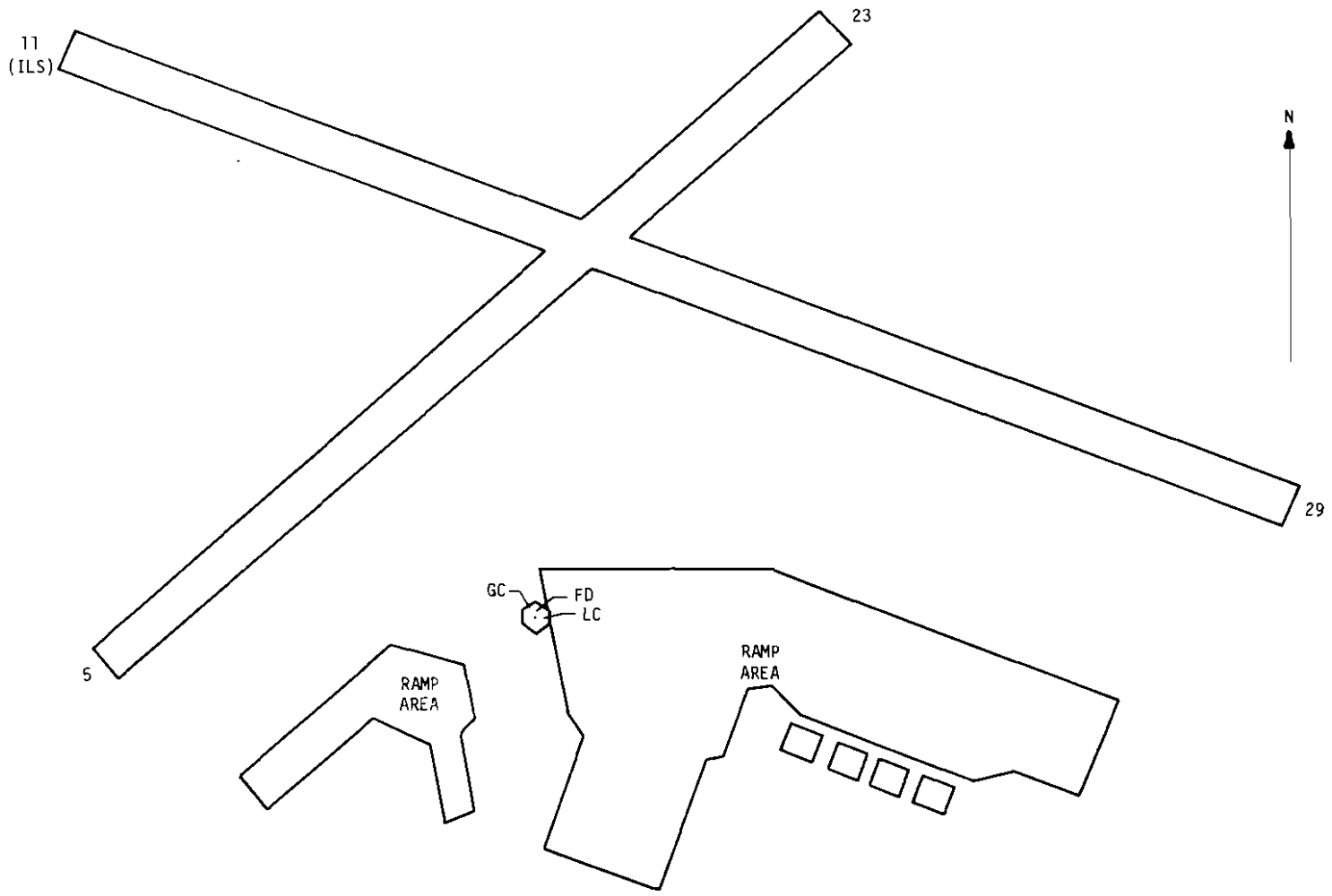

FIGURE 14.6-1. HANSCOM FIELD LAYOUT AND CAB LOCATION (CAB NOT TO SCALE)

TABLE 14.6-1. HANSCOM OPERATIONS RATES - CURRENT AND FORECASTED

	1977 [9]	1987 [9]
Operations (000)		
Air Carrier	1	1
Air Taxi	2	4
Itinerant	149	278
Total	279	472
Instrument Approaches (000)	2.7	5.0

TABLE 14.6-2. HANSCOM CONTROLLER STAFFING

Control Function	Control Station	Area of Responsibility
Local Control	LC	All runways/approaches
Ground Control	GC	All taxiways
Flight Data	FD	

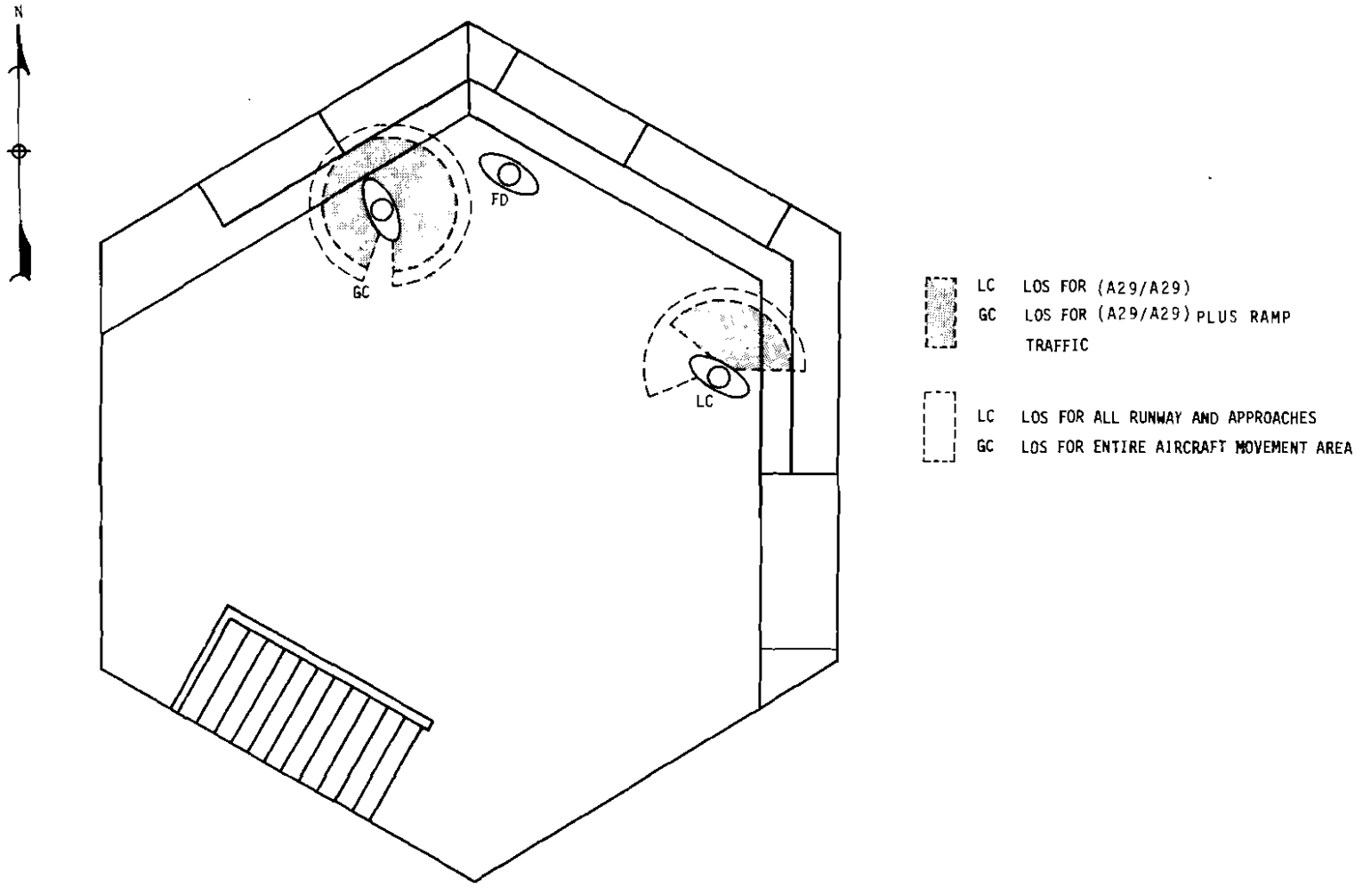

FIGURE 14.6-2. HANSCOM FIELD CAB LAYOUT AND VISUAL LINE-OF-SIGHT ASSUMPTIONS

ing cab layout is sufficiently accurate for this preliminary analysis of the cab's operation and of the placement of the MSDPs equipments. The area of responsibility for each control position is given in Table 14.6-2. Currently, the cab operates from 0700 to 2300. During these hours, the three control positions are staffed.

From Figure 14.6-2, is is seen that LC has a good LOS of the airport's two runways with the possible exception of the approach to runway 5. GC requires almost a full 360 degree LOS capability in order to see traffic in the two primary ramp areas. To reduce potential LOS problems, GC has been stationed near the north apex of the tower cab in good view of the primary airport traffic areas. The controllers do not appear to have any significant LOS problems.

The tower cab does not have either an ASDE or BRITE surveillance display. Consequently, the controllers do not have any display viewing area problems.

FD uses the FDEP flight strips for clearance delivery purposes. However, due to the large number of nonfiled general aviation departures for which FDEP strips are not available and due to the relatively low traffic levels at the airport, both GC and LC tend to use scratch pads for their flight data purposes. As required, either controller can refer to the strips at the centrally located FD station.

14.6.2 Current Poor Visibility Operation

BED experiences visibility conditions which impact on airport visibility about 3.9% of the time[4]. This percentage represents all visibilities of less than one mile between 0700 and 2100. These conditions occur approximately 199 hours each year. Runway 11 is ILS equipped.

BED does not have an ASDE-2 radar. In poor visibility conditions, the controllers rely on pilot position reports by radio voice communication. The controller locations would remain as shown in Figure 14.6-2 in poor visibility conditions.

14.6.3 Future Hanscom Operation

The forecasted BED operations rates are shown in Table 14.6-1. A large amount of growth is anticipated (69% overall). The growth will almost all be made up of general aviation operations, with a large number of touch-and-goes continued to be conducted. Based on the forecasted level of itinerant operations, it is expected that the controller staffing will remain at its current level (see Appendix C).

The major cab related equipment planned for BED is given in Table 12.4-2. The DDC units associated with TIPS and the BRITE Alphanumeric equipment are considered.

14.6.4 Hanscom Operation in the Late 1980's

14.6.4.1 Equipment Installation - The equipment layout and controller viewing areas for the BED cab in the late 1980's are shown in Figure 14.6-3. The TIPS display for FD is shown

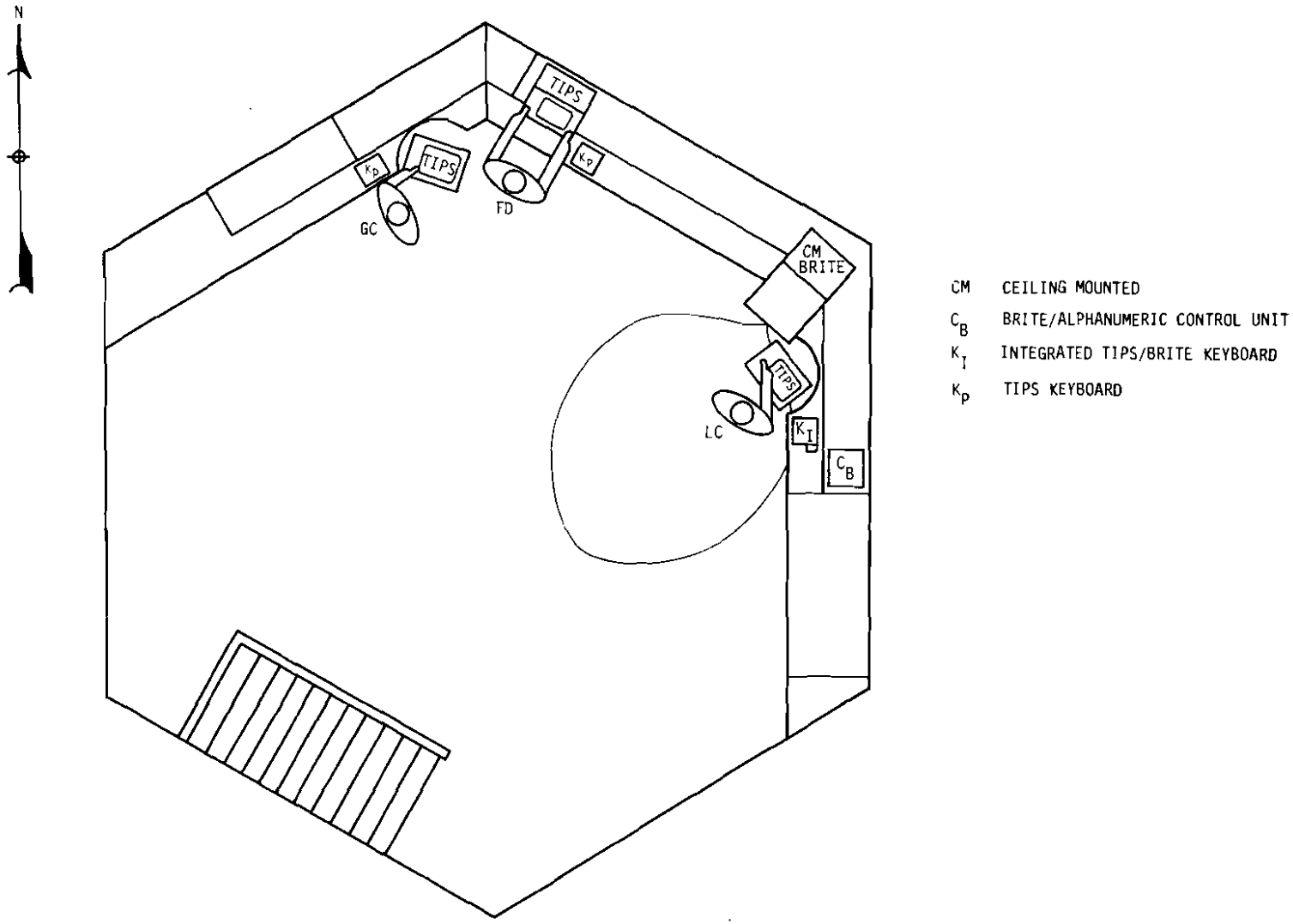

FIGURE 14.6-3. HANSCOM FIELD IFR OPERATIONAL LAYOUT IN THE LATE 1980'S

replacing the console mounted FDEP. The two remaining TIPS displays are pedestal mounted from the floor and cut into the counters. The TIPS keyboards are located on the counters near the displays. To reduce the number of keyboards for Local Control, the TIPS keyboard is assumed to be integrated with the BRITE keyboard at that position.

A BRITE-4 display is ceiling mounted next to the LC station. Once again, the BRITE and TIPS keyboards have been assumed to be integrated.

14.6.4.2 Equipment Impact on Future Hanscom Operation - It is estimated that the addition of the MSDPs equipments in the manner just described would have the following operational impact:

Positive Aspects

1) TIPS provides flight data on both arrivals and departures at the controller stations.
2) The BRITE display eliminates the need for LC to rely solely on pilot position reports for airborne surveillance information.

Negative Aspects

The post mounted TIPS displays tend to require controllers to stand somewhat farther back from their stations then is the current practice. The ability to tip and swivel the displays means that this standback from the stations need only be a matter of inches. The extent this standback com-

promises the ability of the controllers either to reach station controls or the view ramp area traffic has not been determined in this study.

14.6.5 VFR Operation at Hanscom In the Late 1980's

There will be no difference between the operational layout for VFR operations and the layout shown in Figure 14.6-3 for IFR operations. The same displays are being used and the controllers will remain in the same approximate locations and with the same approximate orientations. The only difference will be that both LC and GC will be able to depend solely on visual surveillance of the airport surface traffic instead of pilot position reports.

14.6.6 Overall Hanscom System Assessment

MSDP equipment installation in an add-on fashion into the BED tower cab appears acceptable and uncomplicated.

14.7 PORTLAND (MAINE) INTERNATIONAL AIRPORT (PWM) CASE STUDY

14.7.1 Current Good Visibility Operation

The PWM airport layout with TRACAB location is shown in Figure 14.6-1. The TRACAB is five sided and is located near the geographic center of the airport. The primary runway configuration is arrivals and departures on runway 29. The airport handles about 15 percent air carriers, 15 percent air taxis and 70 percent general aviation aircraft. The current operations rates are shown in Table 14.7-1.

TABLE 14.7-1. PORTLAND (MAINE) OPERATIONS RATES - CURRENT AND FORECASTED

	1977 [9]	1987 [9]
Operations (000)		
Air Carrier	12	17
Air Taxi	13	34
Itinerant	77	139
Total	111	190
Instrument Approaches (000)	3.2	5.9

TABLE 14.7-2. PORTLAND (MAINE) CONTROLLER STAFFING

Control Function	Control Station	Area of Responsibility
Local Control	LC	All runways/approaches
Ground Control	GC	All taxiways
Approach Radar Control	AC	All arrivals in terminal area plus overflights
Departure Radar Control	DC	All departures in terminal area plus overflights
Flight Data	FD	

The controller stations are shown in Figure 14.7-1 and are located in more detail in Figure 14.7-2 along with the TRACAB layout. The TRACAB layout is based on photographs of the TRACAB's interior and a small number of field measurements. The resulting TRACAB layout is sufficiently accurate for this preliminary analysis of the TRACAB's operation and of the placement of the MSDP equipments. The area of responsibility for each control position is given in Table 14.7-2. Being a TRACAB, there is an Approach and a Departure Radar Control position to handle airborne traffic in the terminal area. The TRACAB currently operates from 0700 to 2300. During these hours all control positions are staffed.

Both AC and DC tend to depend on their BRITE displays for surveillance and do not have critical LOS requirements. From Figure 14.7-2, it is seen that GC and LC require a 270 degree LOS capability in order to see traffic across the TRACAB at the threshold end of runway 18. To reduce potential LOS problems, both LC and GC have been stationed near the south apex of the TRACAB in good view of the primary runway and primary traffic areas. DC and FD are typically seated at their stations, so they should not interfere with the line-of-sight of either LC or GC in viewing traffic at the threshold end of runway 18. The TRACAB controllers do not appear to have significant LOS problems.

The TRACAB has three BRITE-4 displays. Two are desk top mounted on a short post at the AC and DC positions. The third

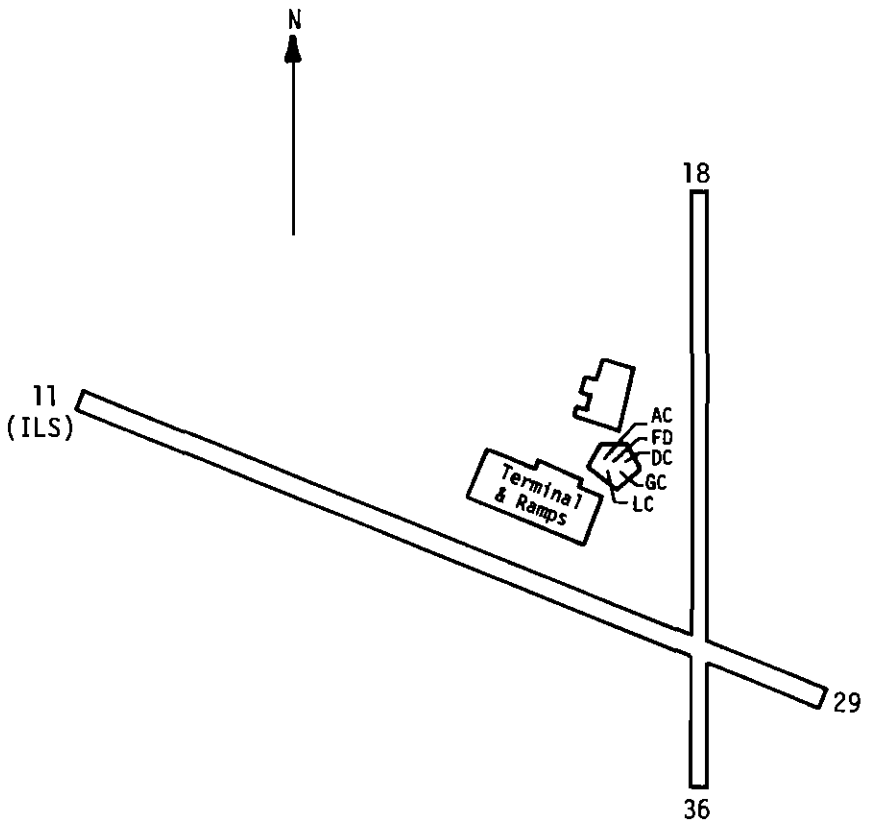

FIGURE 14.7-1. PORTLAND (MAINE) LAYOUT
AND CAB LOCATION (CAB NOT TO SCALE)

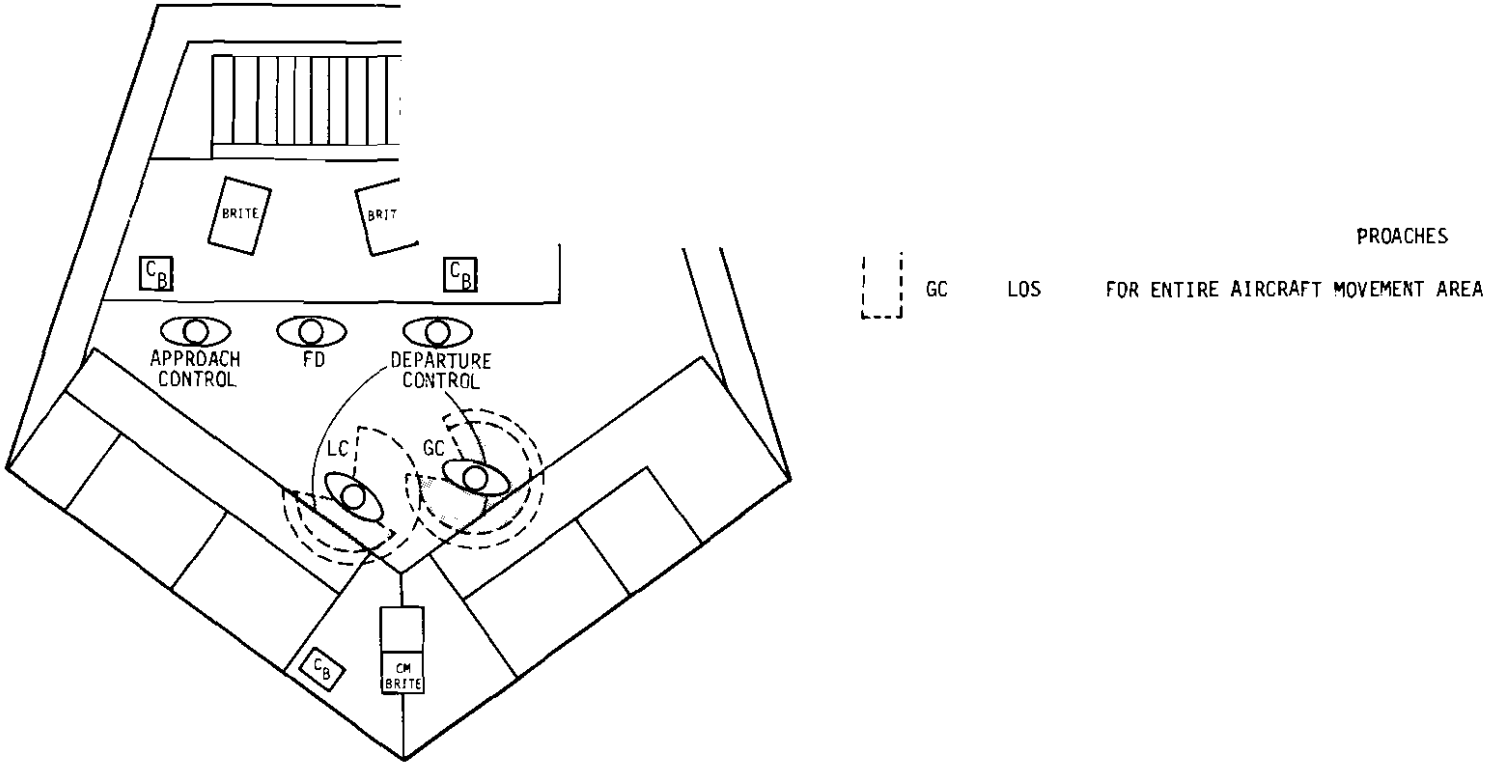

FIGURE 14.7-2. PORTLAND (MAINE) CAB LAYOUT AND VISUAL LINE-OF-SIGHT ASSUMPTIONS

unit is ceiling mounted between the LC and GC stations. The display viewing area for the LC BRITE is shown in Figure 14.7-2. The display viewing area for LC, as well as for AC and DC, appear to be acceptable.

FD, AC, and DC use FDEP flight strips. However, due to both the large number of nonfiled general aviation departures for which FDEP strips are not available and the relatively low traffic levels at PWM, neither GC or LC use flight strips but tend to use scratch pads for their flight data purposes. As required, LC and GC can refer to the strips at the FD, AC, and DC stations.

14.7.2 Current Poor Visibility Operation

PWM experiences visibility conditions which impact on airport visibility about 5.3% of the time.[4] This percentage represents all visibilities of less than one mile between 0700 and 2100. These conditions occur approximately 270 hours each year. Runway 11 is ILS equipped.

PWM does not have an ASDE-2 radar. Visual surveillance of aircraft traffic on the airport surface is supplemented by pilot position reports as required by poor visibility conditions. The controller locations remain as shown in Figure 14.7-2 in poor visibility conditions.

14.7.3 Future Portland Operation

The forecasted PWM operations rates are shown in Table 14.7-1. A large amount of growth is anticipated (71% overall).

Increases are expected in air carrier, air taxi, and general aviation aircraft. The bulk of the operations will remain of the general aviation type, with a large number of touch-and-goes continuing to be conducted. Based on the forecasted level of itinerant operations, it is expected that Local and Ground Control staffing will remain at its current level (see Appendix C). By the late 1980's, the Approach and Departure Control functions may have been transferred to a separate IFR room located in the control tower. This would leave GC, LC and a FD position in the tower cab. However, for the purposes of this analysis, it has been assumed that the TRACAB facility will remain intact and that the Approach and Departure Control staffing will remain at its current level.

The major cab related equipment planned for PWM is given in Table 12.4-2. The DDC units associated with the BRITE Alphanumeric equipment are considered.

14.7.4 Portland Operation in the Late 1980's

14.7.4.1 Equipment Installation - The TRACAB will have an ARTS II computer installed. This means that the facility's BRITE displays will have an alphanumeric capability and that the controllers will have BRITE keyboards. The TRACAB is not expected to get either a TIPS, TAGS, or ASDE system. Consequently, the only change to the current equipment layout shown in Figure 14.7-2 is that a BRITE keyboard will be placed on the counters at the AC, DC, and LC stations.

14.7.4.2 Equipment Impact on Future Portland Operation - Since the equipment will essentially remain unchanged, its impact on the current TRACAB operation will be negligible.

14.7.5 Overall Portland System Assessment

The MSDP equipment for PWM consists of an ARTS II computer add-on to the existing ASR/BRITE system and of keyboards for the controllers to access this computer. The BRITE keyboards should be easily integrated into the controller stations in an add-on fashion.

14.8 OPERATIONAL STUDY SUMMARY

14.8.1 Summary of Results

A summary of the key findings from the airport cab studies follows. In considering these findings, it is important to note that they are preliminary and do not reflect feed-back from operational personnel at the respective cabs.

Primary Findings

1) The installation of the three large MSDP cab systems as additions to the current cab stations/equipment appears feasible. The TAGS displays will be located primarily where ASDE-2 displays now are. Added ASDE-3 displays will primarily be hung from the ceiling on yokes to permit rotating and tipping to the best orientation. TIPS display and "quick action" data entry units will primarily be pedestal mounted from the floor in yokes to permit rotating and tipping to the best orientation.

The major exception to the pedestal mount for TIPS was at Boston. The center island at Boston prohibits the use of the pedestal mounted TIPS since there is too little room between the console and the island and no console counter is provided. However, including the back side of the island which is used to mount some console controls and the console itself, Boston has a great deal of console space. Therefore, TIPS could be console mounted satisfactorily at Boston with only minor station equipment changes.

2) The chief reservation regarding the simple addition of the MSDP cab systems concerns counter space, particularly at the Class A airport cabs. In installing the systems

without reworking/integrating the individual stations, counter space has been drastically reduced. TIPS will probably not completely eliminate the need for note-taking. Of course, notes will be all that is available in the event of a TIPS system failure. In addition to note-taking space, the counter serves the controllers' more personal needs (e.g., to hold cigarettes, ashtrays, coffee cups, etc). The impact of reduced counter space was not considered in this study. An acceptable solution might involve some station equipment rearrangement.

3) The counter space limitations occur despite the integration of the TIPS and BRITE keyboards. In the study it was assumed that the TIPS and the BRITE keyboards would be integrated into one keyboard for Local Control. In this way each controller would have only one keyboard at the Class B cabs and two keyboards at the Class A cabs. The decision was justified during the analyses since even two keyboards resulted in limitations at Los Angeles and Chicago. It may be that further integration of the TAGS keyboard to provide only one keyboard at the Class A cabs is warranted.

4) The add-on type installation does not depend on the sequence of the installation. As currently configured, ASTC equipments can precede or follow TIPS installation. Only new integrated system features might change this. For example, if TIPS is to provide an integrated TIPS/ARTS

keyboard and TAGS is to provide an integrated keyboard, the TIPS and TAGS development activities will have to be coordinated.

Additional Findings

1) It was found that line of sight (LOS) from each controller to his area of responsibility on the airport surface was generally free of obstructions (including other controllers) within the cab. Only O'Hare exhibited a problem where the southside local controller must look around both ground controllers, clearance delivery and flight data to see runways 27L/9R and 22L/4R.

Of course, few cab stations permit the controller to see all airport areas that he will ever be concerned with, particularly at airports whose cab is surrounded by airport movement area (as at Chicago). For this reason some controller movement in the cab takes place and a degree of obstruction is contributed by other controllers. However, at Chicago, southside Local Control appears to have such a problem a large part of the time.

2) It was found that at the equipment Class E airports, where both ASDE and BRITE are installed, the sharing of the displays during poor-visibility IFR conditions can cause viewing problems. The most serious found was at Los Angeles. Northside Local Control and Helicopter Control share the ASDE (console-mounted) and BRITE. To view both displays and use the

flight strips it appears that a good deal of movement and mutual interference takes place. Los Angeles currently operates with a one-of-a-kind ASDE with two direct view PPI displays. However, the airport is considering adding the NU-BRITE scan conversion system at which time an ASDE repeater (i.e., another TV display but without channel independence) hung on a common yoke with the BRITE display in the Northside corner of the cab would eliminate this potential interference problem. In general, the use of ASDE repeaters would solve all three noted problems.

3) A good many cabs experience flight strip passing problems. The most serious is probably Los Angeles where the location of Clearance Delivery relative to Ground Control contributes to the decision for Ground Control to use only a scratch pad and not strips. In general the problems develop when either there are multiple ground control positions and/or the controller's area of responsibility draw them apart in the cab. Boston has avoided such problems with an island in Flight Data. Portland, a TRACAB, also avoids problems with Flight Data centered between Ground Control and Arrival Control in an island-like console.

4) TIPS will, in general, solve the existing flight strip passing problems (see item 3). In addition, it can provide flexibility in controller station placement permitting improvements to VFR line-of-sight (LOS) problems.

5) TAGS and ASDE-3 can, in general, replace the existing ASDE or be added to current cab equipment without station changes. However, care should be taken to furnish an adequate number of displays and display channels. IFR display viewing area problems can and do arise when too few displays are utilized (see item 2).

One significant problem was discovered regarding the "quick look" feature and the two presentation select feature of TAGS. Both features are currently selected by the controller from the ASDE-3/Alphanumeric (TAGS) Remote Control Unit. If this unit simply replaces the current ASDE control unit, it will likely be inconveniently placed since the current ASDE does not have such features. Since convenient location of the whole TAGS Remote Control Unit is unlikely and unnecessary, consideration should be given to adding the two features to the TAGS keyboard which can be conveniently located. In addition, some consideration should be given to adding the features to the TIPS "Quick Action" entry as a TIPS/TAGS integration item. This would be an ideal location since the controller will always be nearby the TIPS display.

14.8.2 Recommendations

Based upon the case studies done to date, the following recommendations regarding further work are made:

1) The two integration issues identified should be considered in some detail. These are the integration

of keyboards and the movement of "quick look" controls (TAGS or BRITE Alphanumeric) and ASDE-3 "two presentation select" controls to the keyboard or TIPS "quick action entry". Integration of keyboards is touched upon in Section 13.8.1 but a good deal of engineering and human factors analysis is required.

2) The studies done to date should be presented to both Air Traffic and Airway Facilities personnel at the airport cabs (or associated regions) for their review and input.

3) The studies should be extended to additional airports. With the large range of parameters within each class (see Table 12.4-2) it is difficult to generalize based upon the few studies done. Both New York (JFK), a small cab, and Atlanta, a new cab, should be examined. This will require on site data collection since existing "Terminal Facility Configuration and Data Survey" reports do not cover these facilities. In addition, added Class B cabs should be examined to better span the range of cab sizes, for example, Dallas-Ft. Worth, Baltimore, Washington, and Greater Pittsburgh (see Table 12.4-2).

14.9 FEASIBILITY ANALYSIS AND INTERFACE ISSUES

Human Factors Considerations

The preceding analysis has been concerned with the problems associated with the addition to the controller environment of new MSDP equipment (principally TIPS and TAGS) with a minimum of redesign or relocation of existing equipment. Because of the lack of counter/console space, a pedestal-mounted TIPS has been proposed, which swivels in a cutout of the counter; this could aggravate any situation where crowding is now a problem. Most of the resulting problems have been recognized and can be summarized as follows:

a. Crowding controllers closer together.

b. Moving controllers farther back from the counter/consoles. This arrangement may require controllers to lean over the TIPS console to reach communications switches or to read panel instruments more closely.

c. Remote location of the new TIPS and TAGS keyboards and controls, with feasible, but awkward, maneuvers required for adjustments and entries.

d. Loss of counter space for writing notes and laying out reference materials.

Some additional factors should be noted:

e. Vertical line-of-sight (LOS) angles are reduced as controllers are moved back from the windows. Where intervening buildings already limit the ramp area visible to GC, further reduction of the lower LOS could be a serious loss.

f. Some proposed layouts assume new use of space currently occupied by flight-strip bays. It is possible that, particularly in the early years, the

flight-strip bays will be retained as a backup system in case of TIPS failure.

g. Because they are not well defined at the present time, display/control devices associated with VAS, WVAS, and Wind Shear developments were not included. These may be particularly demanding of space at LC positions.

There are some positive factors worthy of note:

h. TIPS, by eliminating the requirement to pass flight strips, will often permit relocation of FD and CD positions, thus relieving space constraints on the LC and GC positions.

i. Where LC and GC are crowded together, it might be possible to relocate GC on a raised dais behind LC. This would also give GC an increased lower LOS.

This analysis affirms the need for further integration of display and control surfaces if the introduction of new MSDPs equipment is to help rather than hamper controller activities.

REFERENCES FOR SECTION 14

1. U.S. Department of Transportation, Federal Aviation Administration, Performance Measurement System for Major Airports, Nov. 1975.

2. U.S. Department of Transportation, Federal Aviation Administration, Terminal Facility Configuration and Data Survey - Los Angeles Tower/TRACON, FAA-NA-75-178, Nov. 1975.

3. Shurtleff D., Marsetta M., Showman D., Studies of Display Legibility Part IX - The Effects of Resolution, Size and Viewing Angle on Legibility, ESD-TR-65-411, Electronic Systems Div., Air Force Systems Command, May 1966.

4. National Climatic Center, Asheville, N.C., Ceiling-Visibility Climatological Study and Systems Enhancement, prepared for Federal Aviation Administration, June 1975.

5. Department of Transportation, Federal Aviation Administration, L.E. Stevenson, Tower Controller Surveillance System Parameters, DOT-TSC-FAA-72-18, March 1972.

6. U.S. Department of Transportation, Federal Aviation Administration; Terminal Facility Configuration and Data Survey, O'Hare Tower/TRACON; FAA-NA-75-158; June 1975.

7. U.S. Department of Transportation, Federal Aviation Administration, Terminal Facility Configuration and Data Survey, St. Louis Tower/TRACON, FAA-NA-75-161, June 1975.

8. U.S. Department of Transportation, Federal Aviation Administration, Airport Surface Traffic Control Systems Deployment Analysis-Expanded, R.A. Bales, J. Koetch, FAA-RD-75-51, March 1975.

9. U.S. Department of Transportation, Federal Aviation Administration; Terminal Area Forecast 1977-1987; FAA-AVP-76-5; January 1976.

REFERENCES (CONT)

10. U.S. Department of Transportation, Federal Aviation Administration; Terminal Area Forecast 1977-1987; FAA-NA-75-170; July 1975.

11. U.S. Department of Transportation, Federal Aviation Administration; Traffic Analysis Airport Taxiway Intersections, Data Report; NAFEC Program Report 08-459; 2 November 1976.

15. INTEGRATION ANALYSIS OF ADVANCED SYSTEMS

Several of the MSDP features that are presently in the early stages of development will have interfaces in the AT control tower. These are

WVAS

Advanced Metering and Spacing

TAGS

WSDS

TIPS

Weather Systems

DABS.

It is the intent of this section to explore the interfaces of these systems in the tower cab, with the purpose of identifying incompatibilities, duplications, gaps in information flow, and other system level problems. Because of the advanced nature of these systems, however, the detailed design data needed for such an analysis is largely unavailable. Hence it was found necessary to make general assumptions about the deployment, functional characteristics, and intent of many of these elements. In order to simplify the analysis, attention is restricted to a single tower configuration containing all the above elements. Because of the restricted deployment planned for TAGS and Advanced Metering and Spacing, such a configuration probably will be found in only a few large towers in the 1985-90 time frame. It is assumed that all such towers have ARTS IIIA installations at the associated TRACON, and that none of them are TRACABS. The existence of a BRITE display in the cab is assumed.

The traffic operations levels assumed for the 1985-1990 time period at the study airport are 520,000 air carriers, 68,000 air taxi, 103,000 general aviation and military. These are the averages of projected operations in 1988 at ORD, ATL, LAX, JFK, DFW, obtained by extrapolation from Reference 1. The total of

691,000 annual operations corresponds to an average hourly rate of 118/hr, based on a 16 hour operating day; and a peak hourly rate of 179/hr, based on a ratio of peak hour to daily operations of 9.4%, which is the 1975 average of that ratio for the five airports named.

It will be assumed for the purposes of this discussion that the idealized Controller Station Configurations of Section 13 will not be realized in the MSDP system.

The method of analysis will be to detail the interfaces among the above elements and the tower personnel, and then to compare their information contents. In most cases the interface flows will be based on the information contained in the second interim report. Where necessary, extensions of these data will be made and noted.

15.1 INTERFACES

The major interfaces among the systems and the tower controllers are shown in the simplified schematic of Figure 15.1-1. Table 15.1-1 summarizes the major information flows among the following:

CD	Clearance Delivery Position
FD	Flight Data Position
GC	Ground Control Position
LC	Local Control Position
AC	Approach Control Position (in TRACON)
DC	Departure Control Position (in TRACON)
TS	Tower Supervisory Position
TIPS	Terminal Information Processing System
TAGS	Tower Automated Ground Surveillance
WVAS	Wake Vortex Avoidance System
WSDS	Wind Shear Detection System
WX	Weather Instruments.

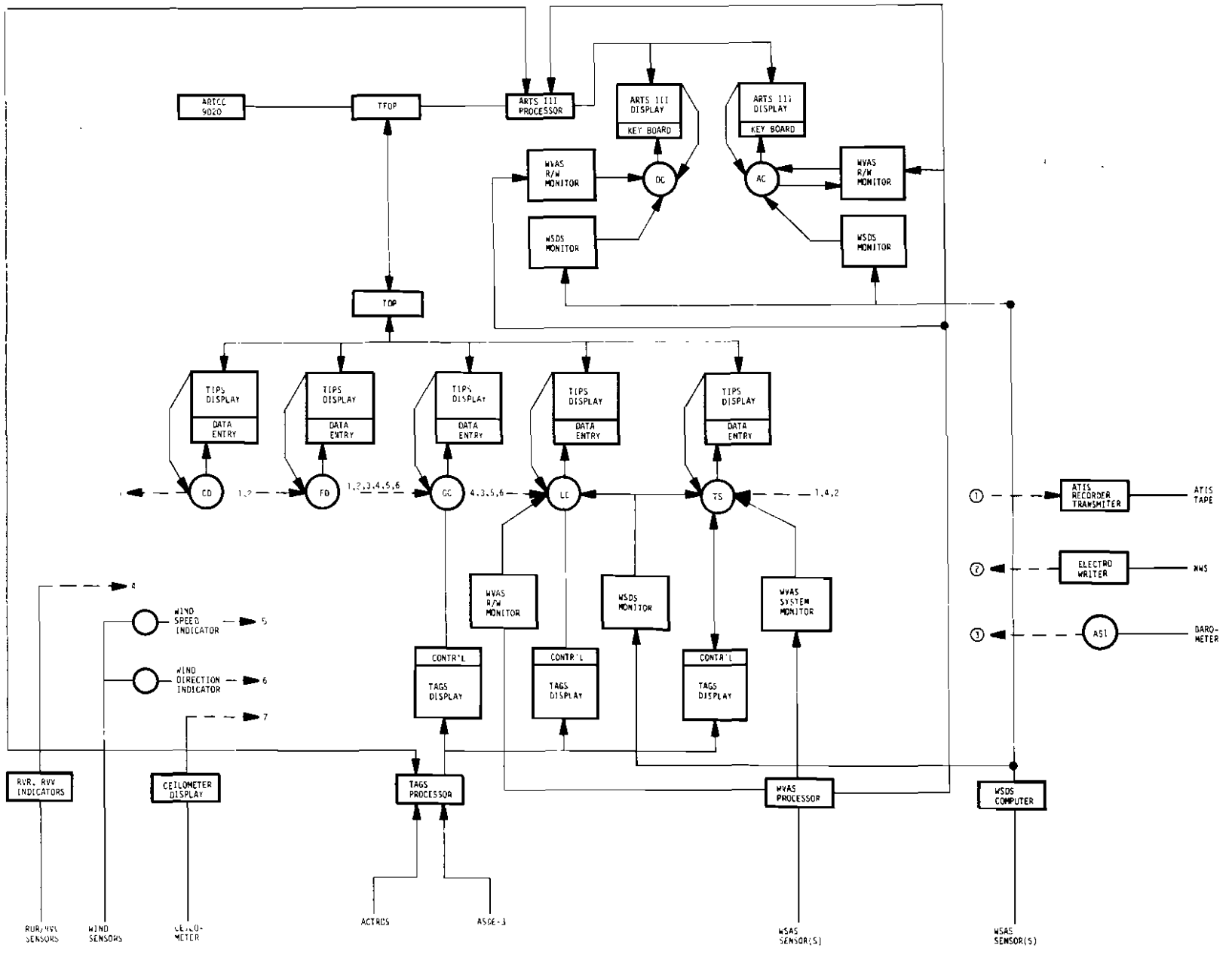

FIGURE 15.1-1. SIMPLIFIED SCHEMATIC OF THE MAJOR INTERFACES

TABLE 15.1-1. MAJOR INTERFACES

TIPS-CD ACID List: Flight Number (in order of departure time) or Flight Number (in alphanumeric order) Status Prefix (+ : cleared as filed) (& : not cleared as filed; should read full clearance) (# : FP cleared but no Push Back Clearance) Abbreviated Flight Plan Readout:
Aircraft Type Beacon Code assignment Departure Coordination Fix Assigned Altitude Takeoff Runway Destination
Full Flight Plan Readout: See TIPS-FD
Airport status: Closed Runways Runways open
Weather: Altimeter Setting (in. mercury) Ceiling (feet) Visibility (miles) Cloud Cover Temperature (degrees F) Dew Point (degrees F) Wind direction & speed, & gusts (degrees, knots, knots) Local time: (hrs, min, sec)
Computer Responses Acceptance/Rejection of messages Significant flight data transactions Significant system problems

TABLE 15.1-1. MAJOR INTERFACES (Continued)

CD-TIPS Touch Controls Read out flight plan request Clear the Readout Area Change IFR FP to VFR FP Manual Keyboard IFR flight plans (enter, amend,(1) cancel) VFR flight plans (enter, amend,(1) cancel) Delay messages Delete FP (to ARTS & NAS) Hold Flight/Release from Hold (to ARTS & NAS)
CD-PILOT Clearance of F.P. Push Back Clearance*
TIPS-FD FP Amendment Request (from CD, LC or GC) Accept/Reject Amendment IFR Flight Plan Readout Flight Identification Aircraft data Beacon code (optional) Speed Coordination fix Coordination Time Assigned and/or requested altitude Route Remarks (optional)
(1) Sent to FP position *At airports where this is given by CD.

TABLE 15.1-1. MAJOR INTERFACES (Continued)

VFR Flight Plan Readout Flight Identification Aircraft Data Beacon code (optional) Coordination fix (or 3-digit heading) Coordination time (optional) Altitude
<u>FD-TIPS</u> IFR AM - Amendment for IFR FP VFR AM - Amendment to VFR FP FP Readout Request (to TIPS, ARTS, NAS)
<u>TIPS-GC</u> Arrivals Data Aircraft identify Aircraft type Assigned runway Remarks
Departures Data Aircraft identify Aircraft type Assigned runway Coordination fix (IFR) or heading (VFR) Remarks FP modification pending (underline ACID) FP modification complete (blinking ACID) Intersection takeoff assigned
<u>PILOT-GC</u> Request for taxiway route to R/W Request for taxiway route from R/W

TABLE 15.1-1. MAJOR INTERFACES (Continued)

GC-TIPS

Delete Arrivals
Resequence
Sort arrival list (by departure time or by R/W and departure time)
Request full FP readout
Cancel IFR beacon code (to TIPS computers)
Transfer FP to FD for modification
HOLD (replaces R/W designator) on departure
Transfer FP to LC
Transfer FP to other GC
Runway assignment change (for departure)
Cancel FP
Intersection takeoff desired (ABCDE)
Messages (delay, etc.)

GC-PILOT

Taxiway route to departure runway
Taxiway route off arrival runway
Request for arrival destination

TIPS-LC

Arrivals Data
- Aircraft Identify
- Aircraft type
- Assigned Runway
- Beacon code
- Approach Type (from TRACON)
- Remarks

Departure Data

Aircraft Identity
- Aircraft type
- Beacon code
- Assigned Runway
- Coordination fix (IFR)
- Heading (VFR)
- Altitude at coordination fix
- Remarks indicator

Abbreviated FP Readout (see TIPS-CD)

Full Flight Plan Readout (see TIPS-CD)

Airport status (see TIPS-CD)

TABLE 15.1-1. MAJOR INTERFACES (Continued)

Weather (see TIPS-CD) LC-TIPS Delete Arrival, send to GC Sort by Runway Resequence (Departure list only) Missed Approach Readout Handoff to TRACON Transmit to FD for change Hold Cancel IFR
TAGS-GC/LC Aircraft position relative to AMA* Aircraft Identity or Beacon code Weight class Tabular list of aircraft by class: by the area or means of track initiation by flight plan data available from ARTS by beacon code by geographic area on AMA (e.g., departure queues) by keyboard specification
GC/LC-TAGS NU-BRITE Controls A/N Keyboard Inputs (see Figure 7.3-3) TS-TAGS Keyboard Entires: Position consolidation commands
TIPS-TS System Status (?) *Airport Movement Area.

TABLE 15.1-1. MAJOR INTERFACES (Continued)

TS-TIPS System Startup Position Configuration (combine, separate, transfer functions) Lead time prior to departure for flight data to FD & CD Messages to ARTCC, TRACON et al. Notification of departure delays Enter Weather data Enter system
PVD-AC/DC Position Ground speed Mode C altitude Aircraft type Aircraft number Beacon code Assigned altitude Requested altitude Destination Fix pair (IFR) or heading (VFR) Overflight indicator Flight plan Departure/missed approach flight control
AC/DC-PVD Transfer arrival flight control to LC
WVAS-TS/TRACON For each R/W Wind direction Wind speed Gust ON/STBY/FAIL indication
WVAS-LC/AC/DC For R/W specified by LC: Wind direction Wind speed Gust ON(STBY)FAIL indication Separation [3-6 or 3]

TABLE 15.1-1. MAJOR INTERFACES (Continued)

AC/DC/LC-WVAS	
Arrival R/W	
WSDS-LC/TS	
Center Field:	Wind direction and speed
For each R/W:	Wind direction
:	Wind speed
:	Wind shear alert

Information flow to and from the pilot via UHF/VHF communications or DABS is not listed. Inter-controller communication is not listed. The symbol WX is used to represent all weather sources available to the tower. The WX sources are essentially the same as delineated in Section 5.6 and shown in Figure 5.6-1. The list of weather instruments is

WX: Wind Speed Indicator

Wind Direction Indicator

Ceilometer

RVR, RVV

ATIS Recorder/Transmitter

Electro-writer

Altimeter Setting Indicator.

For all of the systems shown in Figure 15.1-1 assumptions must be made as to their function and configuration in order to obtain the necessary interface information for analysis. This is particularly true because for some systems (WSDS and WVAS in particular) a definitive configuration has not yet been reached. In other cases (TIPS, TAGS) fairly detailed specifications are available (see Sections 7 and 8). Some of the major assumptions are now discussed:

TIPS: It is assumed that TIPS will be implemented in the form described in Section 8 (Second Interim Report).

TAGS: It is assumed that the hybird version of TAGS is the one that is implemented. This version is described in Section 7.

WVAS: It is assumed that the WVAS system is similar in display and function to the VAS described in Section 10., and differs in the sensors employed and in the processing employed. Since the advanced sensors have not yet been selected, it is possible that the choice will impact the displays and/or functioning of the system.

WSDS: It is assumed that the WSDS display will resemble that described in Section 10 for the LAWSAS, and that both the TRACON and tower will have a display. This particular assumption is not as well founded as the corresponding one for WVAS, which serves to indicate a simple vortex/no vortex condition in both VAS and WVAS versions. In the case of WSDS, an alternative display to the LAWSAS display has been under study in the case of the Acoustic Doppler System. Since several advanced sensors for WSDS are under consideration, and because the LAWSAS display itself is undergoing revision, the final form of the WSDS display is highly speculative at present.

It is assumed that the present weather instruments will be employed in the future. No plans to remove these instruments have been published, as far as could be determined in this study, and, furthermore, the implications of making no change ought to be explored.

15.2 INTERFACE ANALYSIS

An examination of Figure 15.1-1, Table 15.1-1, and the equipment descriptions of Sections 5, 7, 8, 9, and 10, suggests several areas in which either duplication, gaps, or inefficiencies may exist in the information flow.

1. VAS/LAWSAS Sensor Integration

The wind sensing requirements for VAS are not very different from those of LAWSAS. VAS required wind speed and direction at 50 foot altitude and at between 1000 feet and 2000 feet from the threshold, and 800 feet to each side of the extended centerline. The LAWSAS sensors are planned to be mounted on 20-foot towers near the middle marker, along the centerline. Possibly additional LAWSAS sensors will be placed away from the centerlines in order to cover all quadrants of the airport. Combining the

LAWSAS and VAS towers would result in installation and maintainance economies, and improved reliability, because more cross-checks on sensor outputs would be possible.

The need for VAS/LAWSAS integration work has been recognized by the FAA. A portion of the FY 78 Wind Shear program is devoted to combining these two sensor systems. The primary question is whether the requirements may be combined without compromising the effectiveness of either system, and in this respect the effect on predictive accuracy of sensor placement is the determining factor.

2. VAS/LAWSAS Display Integration

The possibility of combining VAS and LAWSAS displays has also been recognized in recent WVAS program planning. The benefits to ATC tower operation are easily seen. Comparing Figures 10.2-4 (VAS System Monitor) and 10.4-2 (LAWSAS Digital Diaplay) reveals that both show runway number, wind direction, speed and gust; the audible and visual alarms of the LAWSAS, however, do not appear on the VAS System Monitor. Both displays present airport-wide wind conditions and hence are suited to a monitor display encompassing the airport and environs, for supervisory or occasional scanning, plus a simple alarm-type display to the LC and GC positions.

3. WVAS/WSDS Display Integration

If, as was assumed, the WSDS display will resemble that for the LAWSAS, then the comments for WVAS/LAWSAS display integration apply as well to the WVAS/WSDS displays.

It is possible, however, that a detailed WSDS display, may be employed for the TS position, and a simpler LAWSAS-type display employed for the GC and/or LC positions. This configuration has the advantage of not encumbering the local and ground controllers with detailed evaluation of the wind shear conditions but providing them with the information needed to advise pilots properly.

4. WX/WVAS/WSDS/TIPS Display Integration

More extensive economies in display area and controller workload than are possible in the above two suggested integrations appear to be possible when TIPS is considered as well. The 12 in. x 18 in. x 14 in. volume of the TIPS display unit can present about 750 characters, or 0.25 character per cubic inch of tower space. The VAS Runway Monitor and LAWSAS displays, on the other hand, together present about 75 characters in 710 cubic inches, or about 0.10 character per cubic inch of tower space. Presentation of the WVAS and LAWSAS information on the TIPS display, therefore, would save tower space. As discussed in Section 14, tower space will be at a premium when the new systems are installed.

An additional advantage of incorporating WVAS and LAWSAS displays into TIPS comes in reduced controller workload. The LC and GC will normally scan the TIPS display for relevant weather information to be conveyed to the pilot. Placing wind shear and wake vortex status and warnings in the same location will eliminate the need for the controller to perform a separate scan of the WVAS and LAWSAS boxes, which must necessarily be located to the side of the TIPS display.

Consideration also may be given in the new tower configuration to removing the ASI, wind speed, wind direction, RVR, RVV, and clock from their present prominent positions in the tower panel. These instruments are presently placed here and there at GC, LC, FD, and CD positions (see Table 5.6-1) at many large towers. Together they occupy about 170 square inches of viewing space (not all on the panel itself; the clock is commonly above the panel on a horizontal surface). The altimeter setting, RVR, RVV, wind speed, wind direction, and time are all available on the TIPS display. Backup instruments, however, could be retained in a less congested area of the cab.

One problem to be encountered in using the TIPS display for WVAS and LAWSAS information, however, is that the present TIPS design (see, for example, Figure 8.2-4) allows only one line for weather-related information, as pointed out in Section 8.5-1.

The WVAS and LAWSAS display requirements may make it necessary to expand the TIPS weather display area to 2 lines. This should not be a difficult expansion, however, being about 6 percent of the total TIPS viewing area.

5. WVAS/M&S Interface for Arrivals

The present plans for this interface are for the WVAS processor to transmit to the M&S system (ARTS III computer) either

1) An indicator of vortex conditions at each arrival runway end, from which indicator the M&S system will deduce which of several spacing tables should be used.

2) The actual spacing table to be employed by the M&S system.

The WVAS/M&S interface is presently being developed; it is, therefore, too early to determine whether any interface problems will develop. Nevertheless, it may be worthwhile to note several potential problem areas for which attention seems desirable:

a) Physical Interface. Transmission of WVAS information to the ARTS III computer may be done through the TFDP or directly. The relative advantages should be considered. As a third alternative, the TDP may serve as the point of interface between the WVAS processor and the remainder of the system. This would have the advantage of eliminating a separate WVAS/TRACON communication, but would have the disadvantage of tying WVAS development to that of TIPS.

b) Dynamic Characteristics of WVAS Indications. Present estimates of the time between changes in meteorological conditions sufficient to produce changes in the WVAS indication (or tables) are of the order of 15 to 30 minutes. A change in WVAS conditions will necessitate spacing changes for those aircraft already under M&S spacing control. At an acceptance rate of 60/hr/runway and a (mean) approach speed of 200 knots, there would be about 3.3 miles between aircraft under saturation conditions. A 60 mile approach path would therefore contain about 18 aircraft. A

substantial number of these, perhaps all, will be under M&S control. If the indication is to allow reduced spacings between certain pairs then M&S may either close up spacings between some aircraft already in trail, or merely apply the new spacing to those arriving at the feeder fix. In the latter case, the benefit of the reduced spacings would not take effect for some 18 minutes (60 miles/200 miles per hour) after the new meteorological conditions had been detected by WVAS, and, perhaps, not much before new meteorological conditions are detected by WVAS.

The transition to larger spacing also deserves attention. It is desirable for M&S to allow increases in spacing for aircraft already in trail. One alternative is to require go-arounds on a selective basis.

Regardless of the design approaches taken to these problems the dynamic characteristics of the meteorological conditions employed by the WVAS algorithm will affect the M&S system design, and, hence, warrant attention during the development cycles.

6. WVAS/M&S Interface for Departures

Advanced Metering and Spacing will sequence and space departures as well as arrivals. Under basic M&S the tower personnel will employ the inter-arrival times to send off departures between arrivals. This is efficient for single runway; with mixed operations when the arrival-arrival spacing is adequate as seen in Figure 15.2-1. The tower personnel would estimate inter-arrival spacing from the BRITE display and plan departures accordingly. If an inadequate number of departure slots is available for the take-off demand, the tower communicates this verbally or through TIPS to the TRACON, which will increase one of the arrival/arrival gaps, into which a succession of two or more departures may be fitted (see Figure 15.2-2). It is seen from Figures 15.2-1 and 15.2-2 that while the inter-arrival time is about 2 minutes when a single departure is inserted between arrivals, it is expanded to about 4 minutes when the second departure is inserted. It is obviously more efficient to employ "natural" gaps in the arrival stream when two or more successive departures must be made. When the

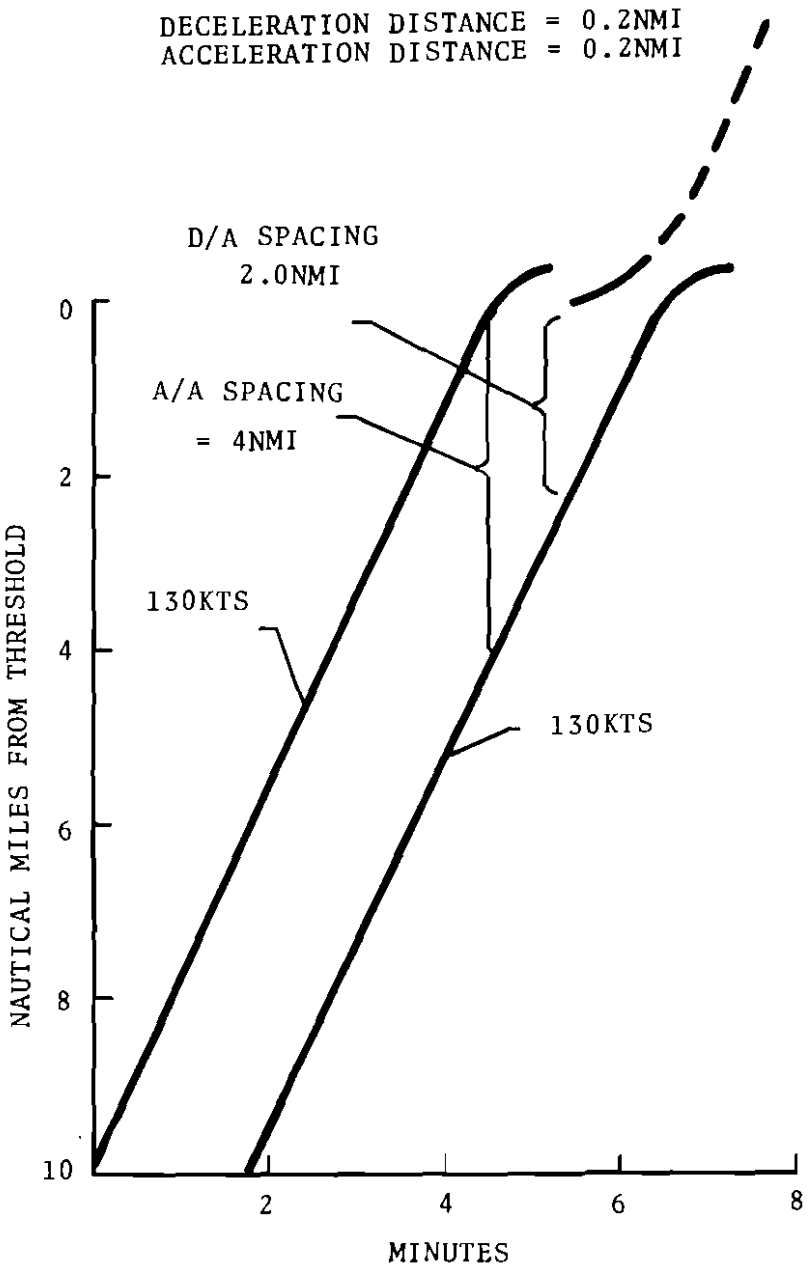

FIGURE 15.2-1. ARRIVAL/DEPARTURE/ARRIVAL FOR SINGLE RUNWAY

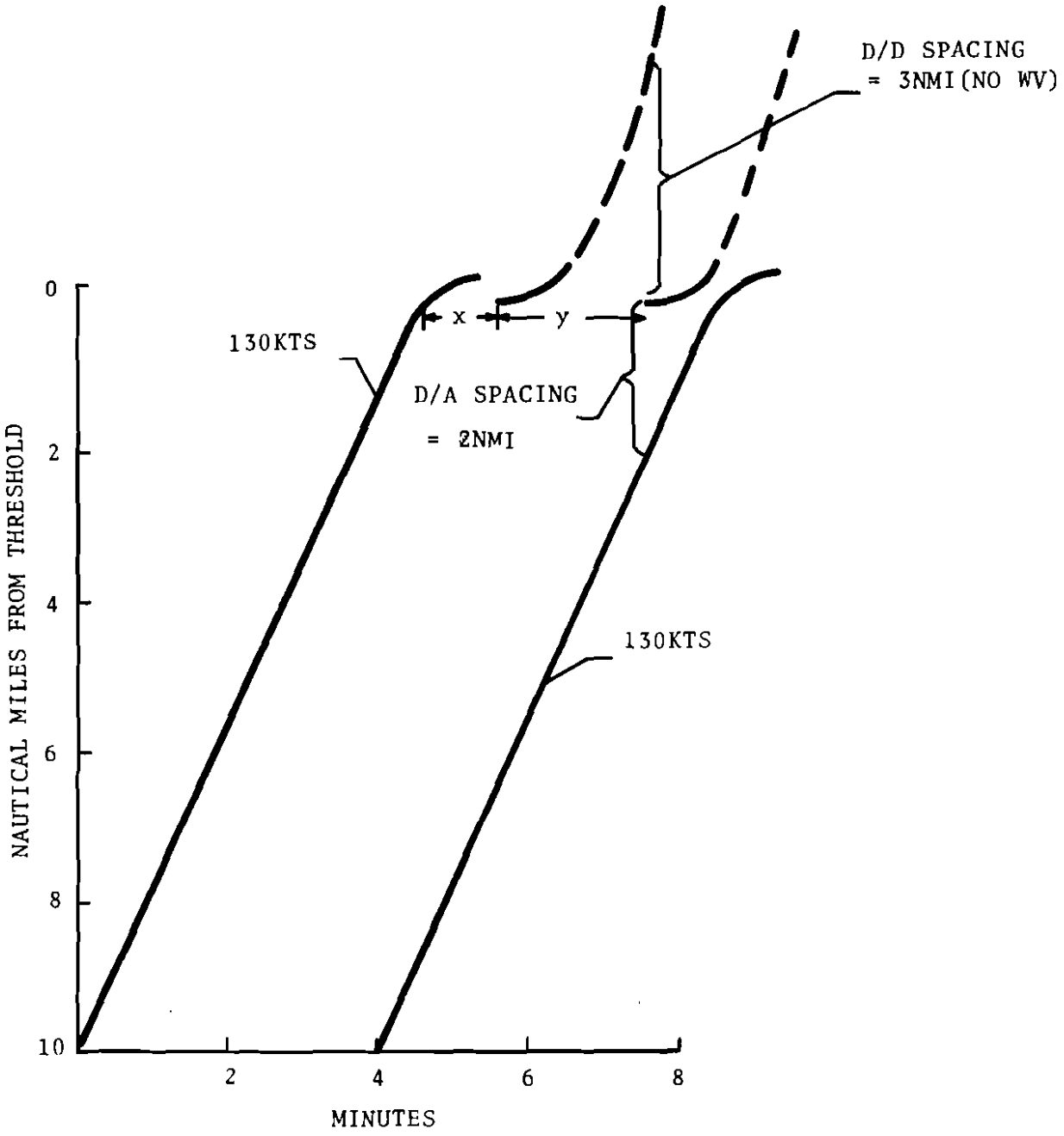

FIGURE 15.2-2. ARRIVAL/DEPARTURE/DEPARTURE/ARRIVAL FOR SINGLE RUNWAY

flight paths of arriving or departing aircraft have an airborne intersection, their passages through the intersection must have a 2-minute separation in time. This is illustrated in Figure 15.2-3.

From the above very brief discussion one may appreciate some of the implications of departure metering for the tower/TRACON interface. For example:

Reduction of A/A separation standards (Fig. 15.2-1) to 3 miles or 2 miles, as may be achieved in the late 1980s, would eliminate the departure gap when operating under saturation conditions. This would make it necessary either to reduce the D/A spacing standard below 2.0 nmi. or to create interarrival gaps, or to anticipate "natural" inter-arrival gaps. In the latter two cases the departures must be available and released at precise times, say ± 5 seconds. In order to achieve this without long departure queues at the runway, it will be necessary to issue pushback clearances in synchronism with the arrival gaps. This implies that M&S should receive confirmation of the departure schedule in time to create or detect arrival gaps. This time depends on the amount of arrival time control available to M&S from the feeder fix to the gate. In extreme cases of profile descent, horizontal path stretching is not possible without negating the profile descent, and the lead time may approach 30 minutes (30,000 feet at the feeder fix/300 feet per nautical mile of profile descent/200 knots average speed). The transfer of departure schedule information to CD, FD, and GC positions is controlled in TIPS by a preset parameter at the supervisory TIPS console. The transmission of schedule confirmation to TFDP from CD should also be easily accomplished under the present TIPS design. Once the arrival gaps have been determined by M&S (using wake vortex inputs) their positions in the arrival stream may be conveyed to GC and LC either verbally or by TIPS message. An investigation may reveal, however, a need to display these gaps, and more likely, the time of gap arrival at the runway, on the TIPS units. At present TIPS displays the arrival sequence, without CTA's (Calculated Time of Arrival), as determined in M&S. It may be possible to cut down on the runway departure queue by displaying these CTA's and issuing pushback clearance accordingly, with a buffer for taxi time variability.

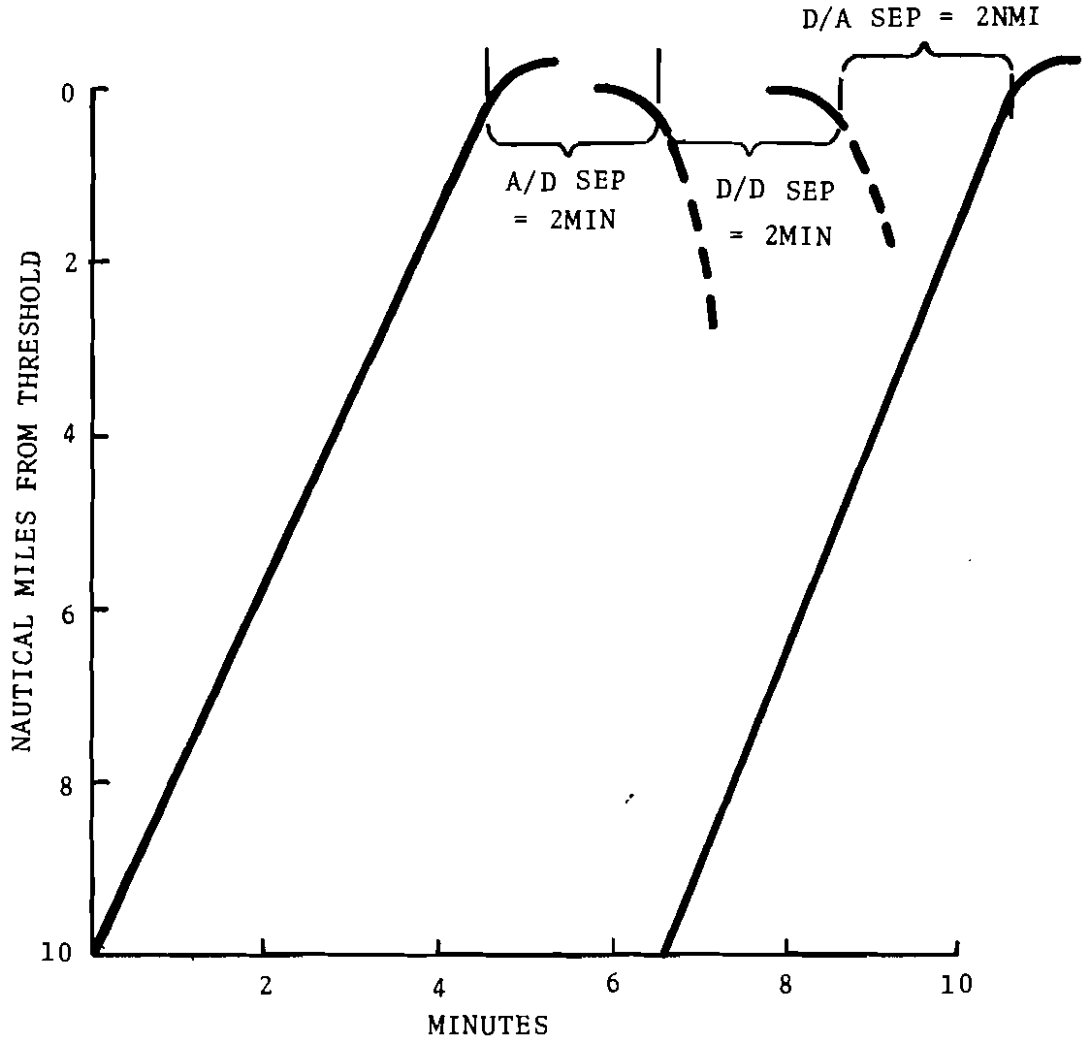

FIGURE 15.2-3. ARRIVAL/DEPARTURE/DEPARTURE/ARRIVAL FOR AIRBORNE INTERSECTIONS

7. Large/Heavy Indicators

It has been WVAS experience that the distinction between large and heavy aircraft as per 7110.65, Appendix 3, is useful in analyzing wake vortex hazard. The large/heavy division, being based on maximum gross takeoff weight, cuts across aircraft types. For example B707's are either large or heavy, depending on whether they are in the 100, 200 or 300, 400 series. Thus the TIPS and TFDP information (which is the same as the M&S information), is inadequate to distinguish"large"in the present design. A modification of the data base and display is a simple fix that will eliminate unnecessary voice communication.

15.3 SUMMARY OF PROBLEMS

The systems dealt with in this Section are all in preliminary design and/or test phases, so that detailed signal flow and information flow analysis among them is not possible at present. It was necessary, therefore, to assume that the final systems will resemble the present versions as documented in this report.

The integration problems that were identified under the above assumptions are of two general types

1) Economies of tower space and controller workload that may be achieved by combining sensors and/or displays for VAS, LWSAS and for WVAS, WSDS; and by displaying WX, WVAS, or WSDS information on the TIPS display.

2) Potential WVAS/M&S interface problems arising from a) the dynamics of changing the arrival stream spacing according to the WVAS indication, and b) synchronization of gate departure and take off clearances with the inter-arrival gaps produced by M&S, so as to minimize take-off queues.

REFERENCE FOR SECTION 15

1. Terminal Area Forecast 1976-1986, September 1974, DOT/FAA, Office of Aviation Policy, Aviation Forecast Branch (AVP-120)

16. INTEGRATION OF SENSOR SYSTEMS

16.1 TAGS/VAS SENSOR INTEGRATION

The deployment of ASTC Surveillance and Vortex Advisory Systems (VAS) at the major airports adds two more systems to the airport surface already congested with terminal surveillance, communications, meterological, lighting, ILS, and other systems. Because the siting criteria for both the multilateration TAGS sensors and the VAS ground wind sensing towers favor locations at the airport periphery (VAS near runway thresholds and TAGS to the outside of runways), at first glance, a collocation seems worth exploration. Possible benefits from such a collocation are a reduced number of new towers obstructing navigable airspace and installation cost savings. The first benefit is probably unquantifiable, but is motivated by Federal Aviation Regulation part 77.25.[1] Installation cost savings are in the form of common cable runs, common access roads, and common site construction (grading, surveying, concrete foundations, etc.). Because cabling installation costs are a major factor in the overall cost, this study will first estimate the intrasystem communications requirements for TAGS. From that, land line and microwave link costs for a given sensor deployment are determined. Installation siting costs are then examined independently for the TAGS and VAS deployments. Based on currently known siting criteria, the feasibility of collocating the TAGS and VAS sensor sites is determined. Finally, the cost savings of the resulting collocation determined for both the region and FAA are expressed both in dollars and as a percentage of total acquisition plus installation cost.

The initial study is done for O'Hare, as considerable data exists concerning VAS tower locations and costs, and a preliminary TAGS siting study had been done previously. The same techniques are then applied to Los Angeles, the next most likely airport to receive TAGS.

16.1.1 TAGS Intrasystem Communications Requirements

A functional block diagram of the TAGS system is shown in Figure 16.1-1. Two major information flows are identified between the sensor sites and the Data Acquisition Subsystem (DAS) control. See Table 16.1-1. The DAS sensor command information provides each addressed site with beam steering commands, power levels, beacon code, and timing information to establish interrogation cell size and to allow degarbling to be done at each receive site. From each receiver site is sent a digitized TOA measurement, beacon code, and a garble measurement.

Real-Time vs Buffered Data Flow - Information exchange between DAS control and the sensor sites can be in real time, i.e., at the same rate the beacon code replies come from the transponder, or can be done by buffering, temporary storage, to slow the data rate. Real-time transmission requires an expensive data link, either microwave link or underground coaxial cable. Because a unique microwave frequency channel assignment is required for each DAS real-time communication link, and considering the number of sensor sites for a large airport (eight estimated for O'Hare), the limited spectrum available makes real time usage of a microwave link unfeasible. Installation of underground coaxial cable is expensive* because airports currently do not have underground cable duct runs throughout the airport other than for power and limited bandwidth twisted pair control cable.

An alternative to real-time data transmission uses remote data processing. The data rate can be reduced by temporarily storing the data and sending it at a steady stream whose average

*A study of broadband data link installation costs for an 8-site DAS deployment at O'Hare indicated that underground coaxial cable costs are about 50 percent higher than microwave link costs including microwave link hardware and cable costs as well as installation in both cases. The microwave link hardware costs were based on a $30K hardware cost estimate per DAS site for 10 MHz bandwidth two-channel configuration.

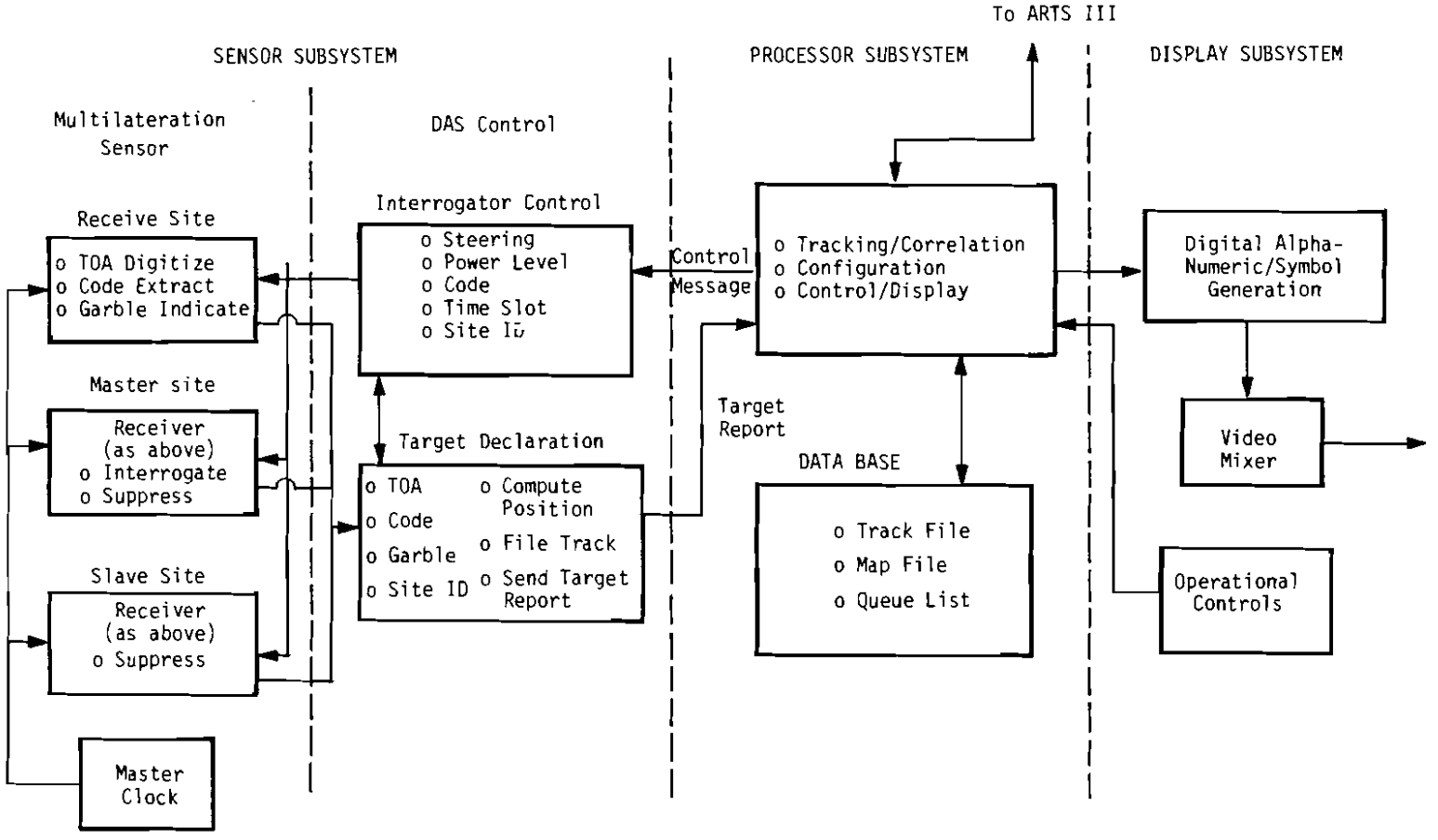

FIGURE 16.1-1. TAGS FUNCTIONAL BLOCK DIAGRAM (TRILATERATION SENSOR PORTION)

TABLE 16.1-1. TAGS DAS CONTROL INFORMATION FLOW

1. DAS Control to Sensors	#Bits
Steering	9 (120° at 0.25° per position)
Power Level (P_1/P_2)	16 (50 dB)
Beacon Code	12
Time Slot ID	4 (12 time slots/period)
Site Identifier	3
Total per Message:	44 bits
2. Sensors to DAS Control	
Time of Arrival (TOA)	14 (125μsec; 10 ns clock)
Beacon Code	15 (12 ID + SPI +X+ Emerg)
Garble Measure	3 (interleave type)
Site Identifier	3
Total per Message:	35

rate is much less than the peak. The resultant rate depends upon the system update rate. Interrogation rate estimates for O'Hare indicate that an 800/second rate is adequate to handle 100 surface targets including reinterrogation and 5 second area search.[2] Because it is desirable to avoid high peak interrogation rates from the interference standpoint, an 800/second average rate results in 2 TAGS interrogations (time slots) per ATCRBS dead time. The ATCRBS interrogation period is typically 2500μsec.

During this time two of each control and sensor message shown in Table 16.1-1 are transmitted. Taking the largest of the two, the 44 bit control message, as the worst case, results in a transmission rate of 2x44 bits per 2500μsec, or 35 kbs, well within the reach of synchronous data modems over multiple twisted pair. Using a modem at a rate of 7200 bps, data can be sent over 2 miles of twisted pair cable, such as, the ICC Com-Link II, Bell System Specifications.

Using parallel transmission, 5 pairs would be required for the DAS to sensor link, and 4 pairs for the sensor to DAS link for a total of 9 pairs. If shorter distances and/or less stringent specifications are possible, cabling requirements could be as few as 4 pairs total for each link from a sensor site to the central control point.

Alternatively, data can be multiplexed over a party line microwave link, with each site uniquely addressable. The above bandwidth requirements per site times the number of sites allow considerable excess channel capacity for expansion and use by other airport systems.

16.1.2 O'Hare TAGS Sensor Siting Study

A preliminary plan for TAGS sensor siting at O'Hare done previously resulted in a total of 8 sites, consisting of 5 interrogators, capable of performing either master or slave functions, and 3 receive-only sites. The locations chosen are shown in Figure 16.1-2.

16.1.2.1 DAS Siting Criteria - The following constraints are applicable to TAGS sensor siting.

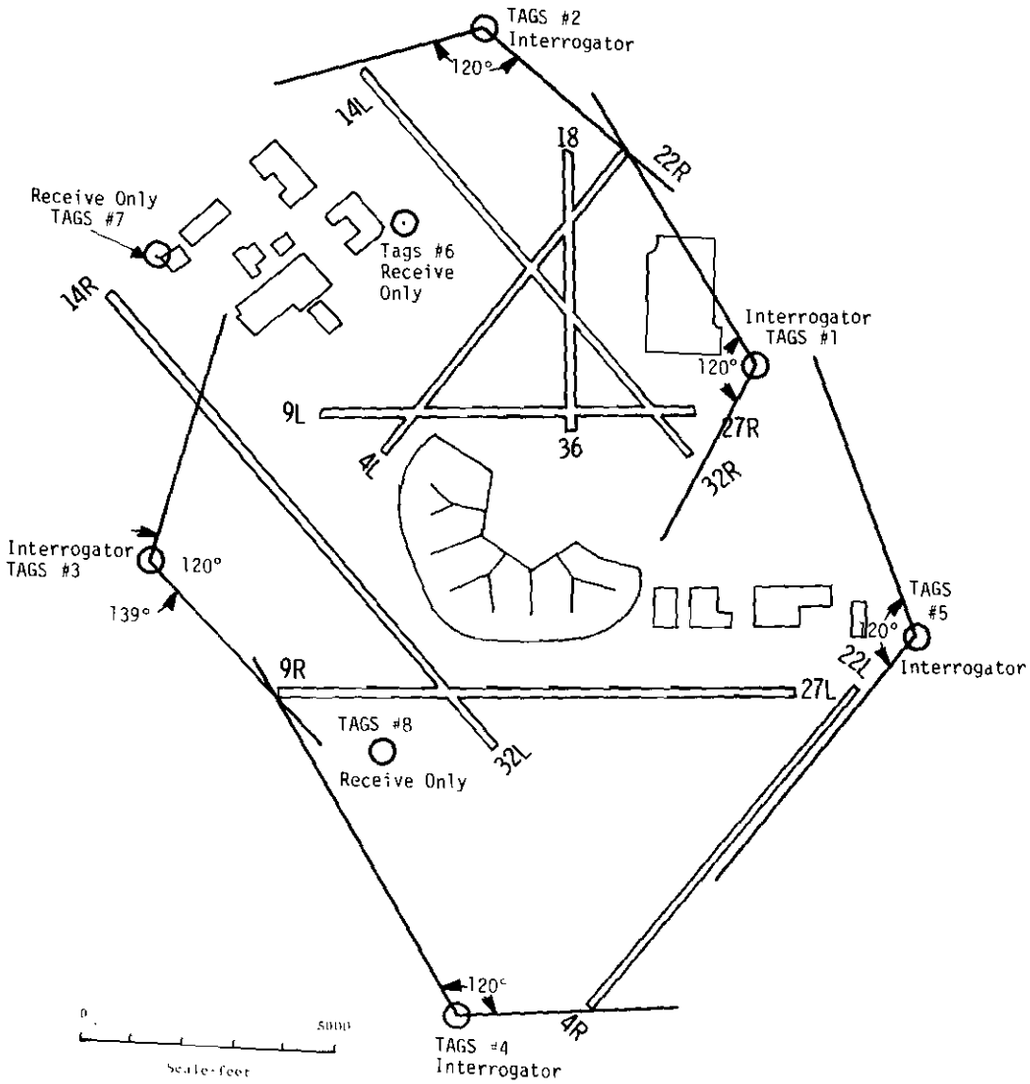

FIGURE 16.1-2. O'HARE DAS SITING (PRELIMINARY)

1. The maximum interrogation baseline is 9170 feet. If the region of non-suppression falls outside the Airport Movement Area (AMA) this rule may be violated. The 9170 foot value is a result of maintaining the 8μsec or greater delay between master and slave PI pulse interrogations to prevent a false mode decode from aircraft located in the non-suppression, null, region of the slave station.

2. Interrogators can be no closer than 600 feet from the AMA to stay within the dynamic range of the transponder.

3. A maximum feasible steering angle of the electronic scan phased interrogator array of ± 60° from boresight is assumed, giving a total coverage of 120° for each station location. Null beamwidth and antenna gain are a function of the cosine of the off-boresight angle. At 120°, the null beam width is twice and gain is one-half the boresight value. Values beyond 120° may be used with consequent broadening where range to the target is small enough to maintain adequate resolution.

4. The maximum and minimum angles of intersection for the interrogation null beams are 90° ± 51° based on maintaining an interrogation half-cell width of ±150 feet for 90 percent probability of a correct reply. (90° ±51° = 39° to 141°). Intersections outside that range reduce resolution. See Figure 16.1-3.

5. To maintain system measurement accuracy, Geometric Dilution of Precision (GDOP) should be maintained ≤2. GDOP for targets within a triad will meet this. GDOP may be acceptable for targets outside the triad, but becomes particularly severe for targets on an extended baseline (interrogation or receive). See Figure 16.1-4.

6. Line of sight visibility must be maintained between at least three receivers and the aircraft, and two interrogators and the aircraft.

7. Obstacle clearance requirements for the navigable airspace around the airport must be met.[1]

8. The TAGS DAS sites must be on airport property.

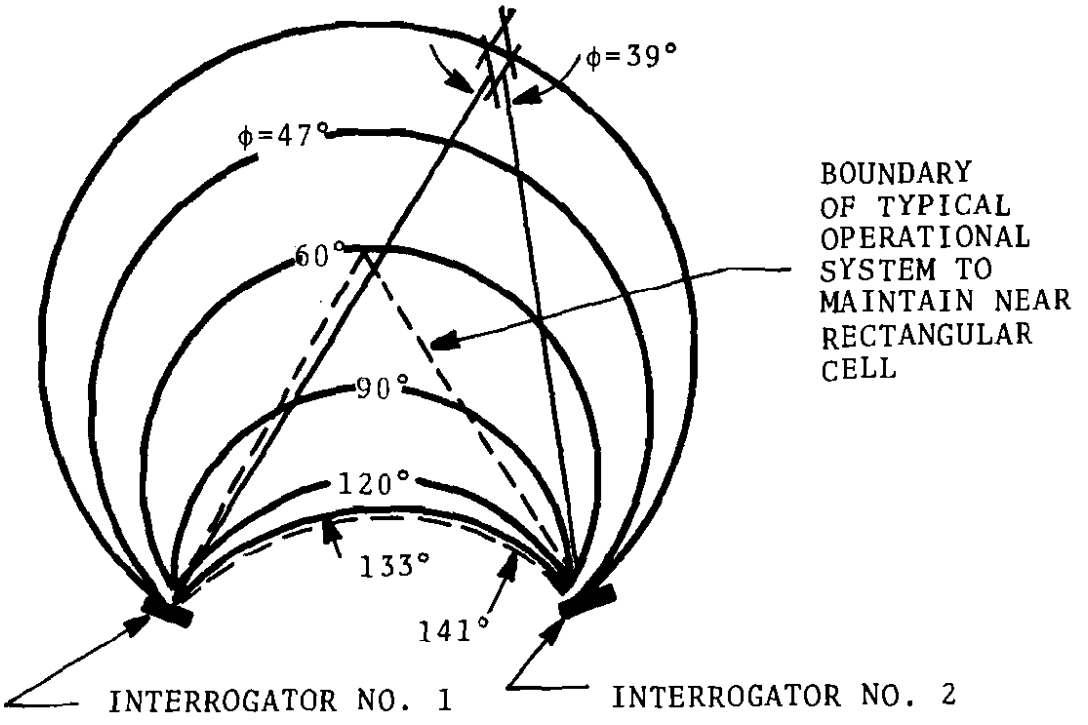

FIGURE 16.1-3. INTERROGATOR COVERAGE ZONES

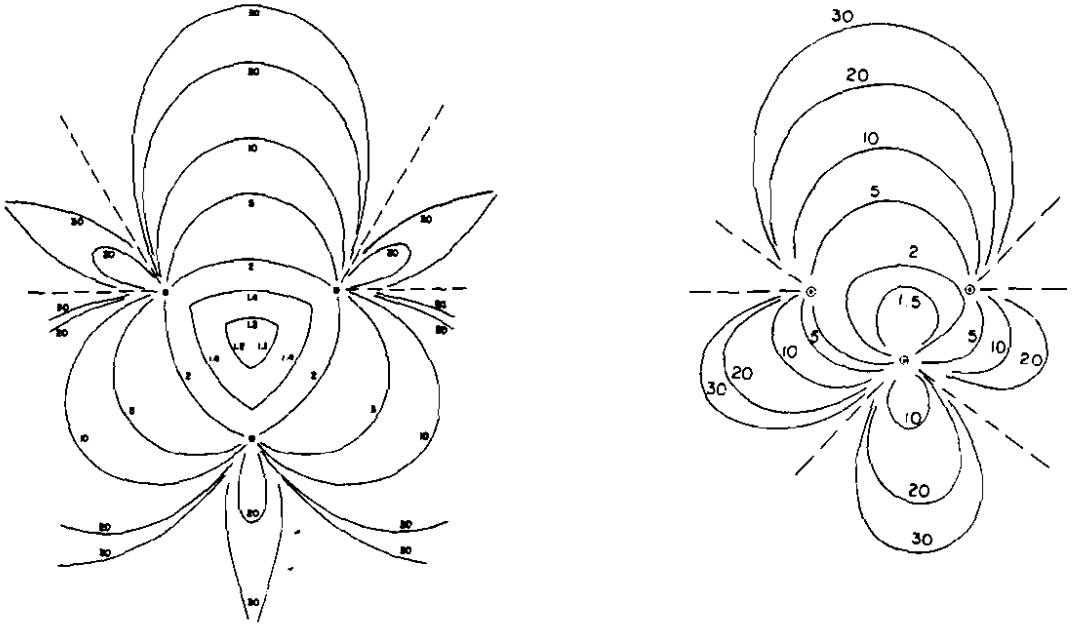

FIGURE 16.1-4. CONTOURS OF CONSTANT UNCERTAINTY

9. Interrogation stations must be within 15000 feet of aircraft being interrogated.

It is not obvious upon inspection of Figure 16.1-2 whether or not all the above siting criteria have been met. In particular, the potential blockage by the hangar area between 14R and 14L to aircraft at the 14R threshold makes the particular siting non-ideal. Rather than critique this preliminary siting plan further, it shall be left as an example of the considerations involved in DAS site selection, and the critical discussion will take place in the collocation study section.

16.1.2.2 TAGS Installation Cost - To provide for cost comparison between independently sited and collocated VAS/TAGS cases, the O'Hare DAS sensor deployment hardware and installation cost is estimated for both communication link configurations, landline and microwave link. Acquisition and installation costs only are shown. O&M costs for either configuration are not relevant to the comparison. Figures 16.1-5 and 16.1-6 show the nature of the towers installed and are the brassboard system towers, not permanently located. Table 16.1-2 summarizes the estimated costs. The remote data processing concept configuration is assumed for both sites. The cost of an external 1090 MHz link for receive site clock synchronization was not included, but would be the same for either configuration. A master clock reference is required at each receive site to digitize the TOA. The microwave configuration cost is higher by 10 percent referred to total cost, because the land line configuration assumes that the bulk of cabling requirements can be met by existing underground twisted pair cable runs. The landline cost figures include an average of 2000 feet of new run required per site at $5.50 foot installed. As will be discussed later, two reasons may favor the use of a microwave link:

1) Adequate underground cabling may not exist, as assumed.

2) Additional users, e.g., WVAS ground sensors, may be able to share the microwave link.

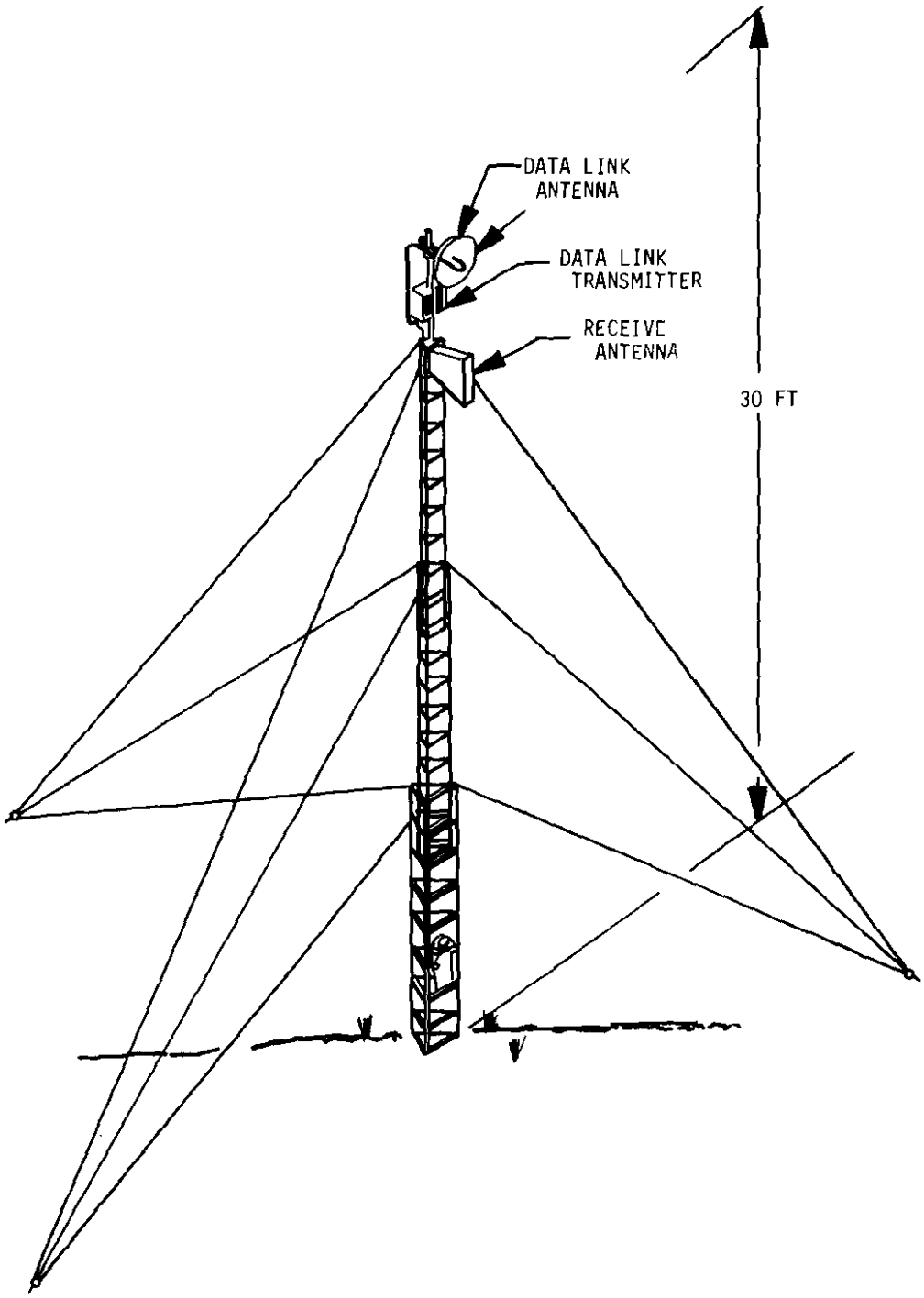

FIGURE 16.1-5. RECEIVE STATION TOWER DETAILS

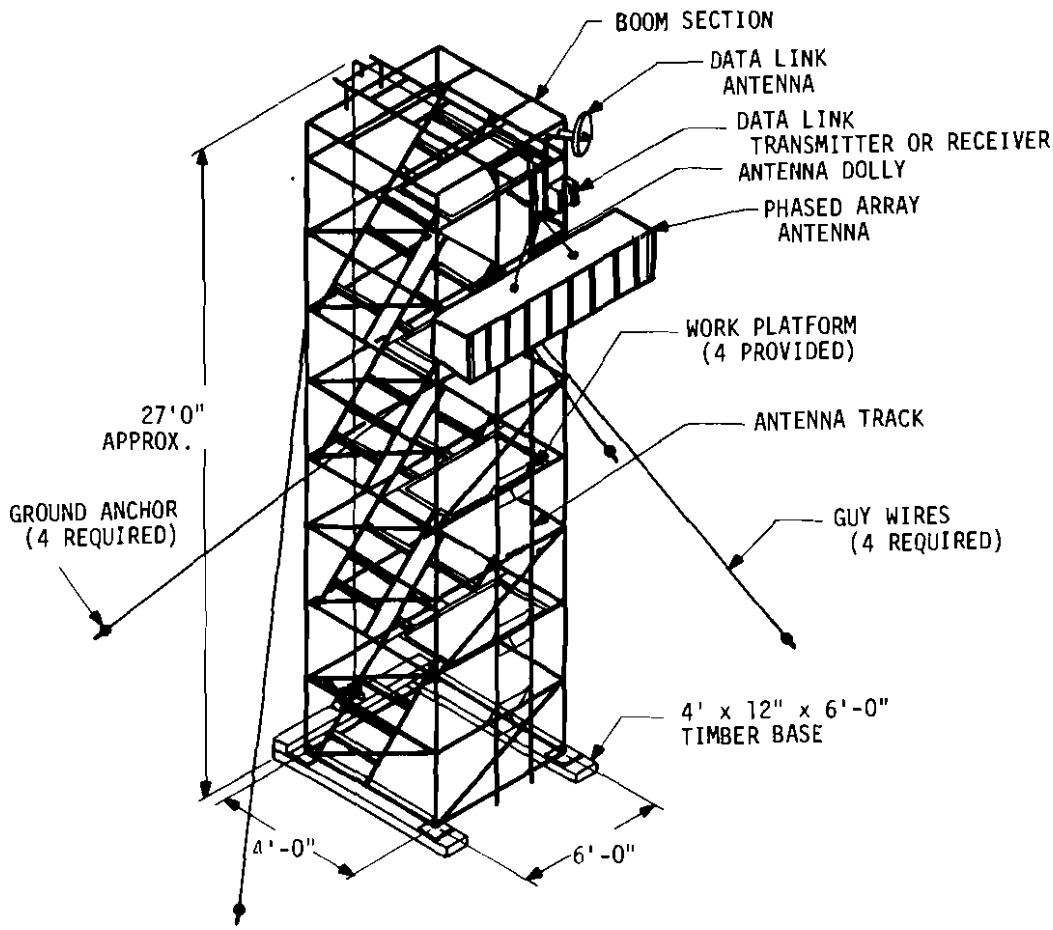

FIGURE 16.1-6. BRASSBOARD ANTENNA TOWER DETAILS

TABLE 16.1-2. TAGS TRILATERATION SENSOR HARDWARE COST ESTIMATE (O'HARE)

	Microwave Link	Land Line*
1. 8 Site Hardware Acquisition Costs (based on buy of 9 TAGS Systems in 1980) 5 Interrogator Stations 3 Receive Stations 1 Central Control Station 1 Processor/Display	$1422 (includes $30K site for Microwave hardware)	$1206 (includes $24K cable costs)
2. 8 Site Installation Costs Foundations Tower/Shelter Erection Electrical Terminations Communication Installation Power Access Roads Civil Engineering/Supervision 30% Contingency	$400K	$473K
3. Total Costs (Acquisition & Installation)	$1822	$1679

*Assumes adequate buried twisted pair cable capacity exists at junction points within 2000 feet from each DAS site.

16.1.3 O'Hare VAS Sensor Siting Study

16.1.3.1 Siting Criteria and Data Transmission - The tower locations for the first operational VAS system currently being installed at O'Hare, August '77, are shown in Figure 16.1-7. Each tower, 50 feet in height, must be outside of navigable airspace in accordance with FAR Part 77.25, must be on airport property, and must be a reasonable distance away from buildings, trees, elevated roadways, etc. which can disrupt air flow. The most desirable location for the towers is shown in Figure 16.1-8, with the outlines for the obstruction zones for an instrumented runway shown. As seen in Figure 16.1-7, only two of the seven sites come close to the ideal location, as there is considerable flexibility in tower location providing the terrain is flat. For example, intersecting clear zones for runways 27L and 22L combined with local obstructions resulted in the particular placement of VAS #7. In all cases, the resulting locations are within 1500 feet of existing airport power and signal junction points. The transmission data rates from each tower (6 wind sensor signals per tower) are low - less than 6kbs, allowing digital transmission over one twisted pair cable. Also shown in Figure 16.1-8 is the ground wind vortex sensing system anemometer array which is the most likely sensor for the eventual WVAS installation.[2] The data transmission rate from the ground vortex sensor array is similar to the VAS sensors, adding no more than one additional cable pair per site.

16.1.3.2 Installation Cost - The VAS sensor and display acquisition costs and installation costs for the O'Hare system are shown in Table 16.1-3. The VAS hardware cost estimate is based on a production buy of 13 systems. The installation cost is based on detailed estimates provided by the Great Lakes Region for the actual O'Hare installation.

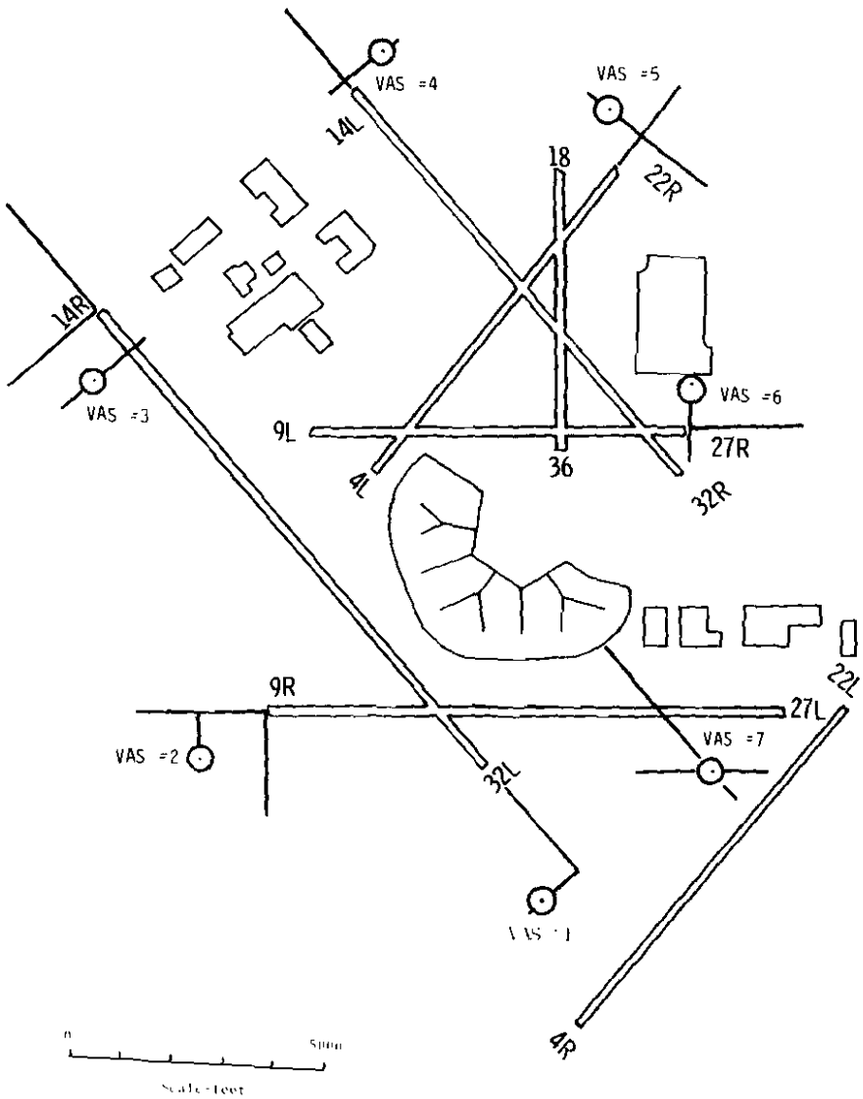

FIGURE 16.1-7. O'HARE VAS SITE LOCATIONS

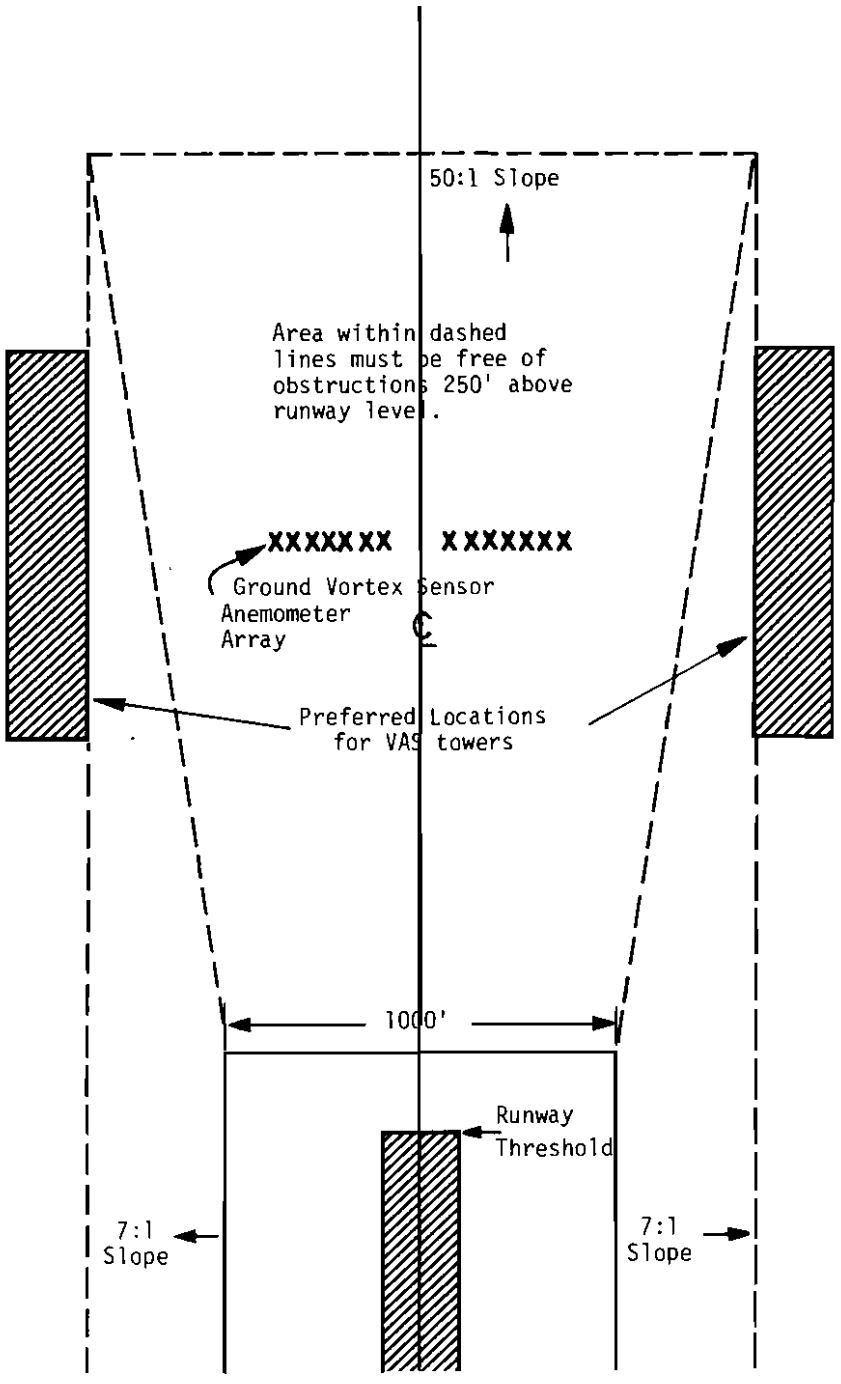

FIGURE 16.1-8. VAS TOWER IDEAL LOCATIONS

TABLE 16.1-3. VAS O'HARE SENSOR INSTALLATION COSTS

1.	Acquisition Costs	
	Towers	
	Sensors/Electronics	
	Processor	
	Display	$300K
2.	Installation Cost	
	Tower Foundations	
	Tower Erection	
	Electrical Terminations	
	Underground Cabling	
	Power	
	Access Roads	
	Civil Engr/Supervision	
	30% Contingency	$186K
3.	Total Cost (Acquisition & Installation)	$486K

16.1.4 Feasibility of Using Existing VAS Sites for TAGS Sensor Locations

16.1.4.1 Summary - The current VAS meterological tower locations are shown in Figure 16.1-7. By applying the TAGS siting criteria of Section 16.1.2.1 to each of the seven VAS locations, it was determined that 4 TAGS interrogator sites could share VAS locations and provide acceptable coverage of the AMA (Figure 16.1-9). The three remaining VAS locations are unusable as will be discussed subsequently.

Constraining TAGS sensors to be collocated with as many VAS sites as possible does not incur a penalty; the number of TAGS sites for full O'Hare AMA coverage for the above configuration is actually one less than the independent TAGS siting study done earlier. However, TAGS #2 requires antenna coverage beyond 120°, which will slightly degrade performance.

Table 16.1-4 lists each VAS site and its use as a TAGS sensor location. Table 16.1-5 lists O'Hare runways and how TABS interrogator coverage is provided by the adddition of one interrogator called TAGSα. TAGSβ and TAGSγ are receive-only sites required for 3-site receiver line of sight visibility from the AMA.

16.1.4.2 Discussion of TAGS Coverage - The northern half of O'Hare can be covered adequately by TAGS interrogators located at VAS sites #5, #4, #3 and #2. A non-VAS sited receive-only site between 4L and 9L thresholds is required to eliminate blockages (TAGSγ), ensuring that aircraft on the AMA always has 3 receivers in view. VAS #6 is not usable at its current location because the interrogation antenna 120° coverage limitation does not allow simultaneous coverage at the threshold end of 27R/32R and 22R. For VAS #2 the 120° coverage angle must be placed to cover 14R threshold, sacrificing full view of 4R. The lack of full 4R coverage by VAS #2 is only one of several problems with TAGS, VAS collocation for the southern half of O'Hare.

TAGS coverage of runways 9R/27L and 4R/22L from sensors co-sited with VAS #2, #1 and #7 is not possible for the following reasons:

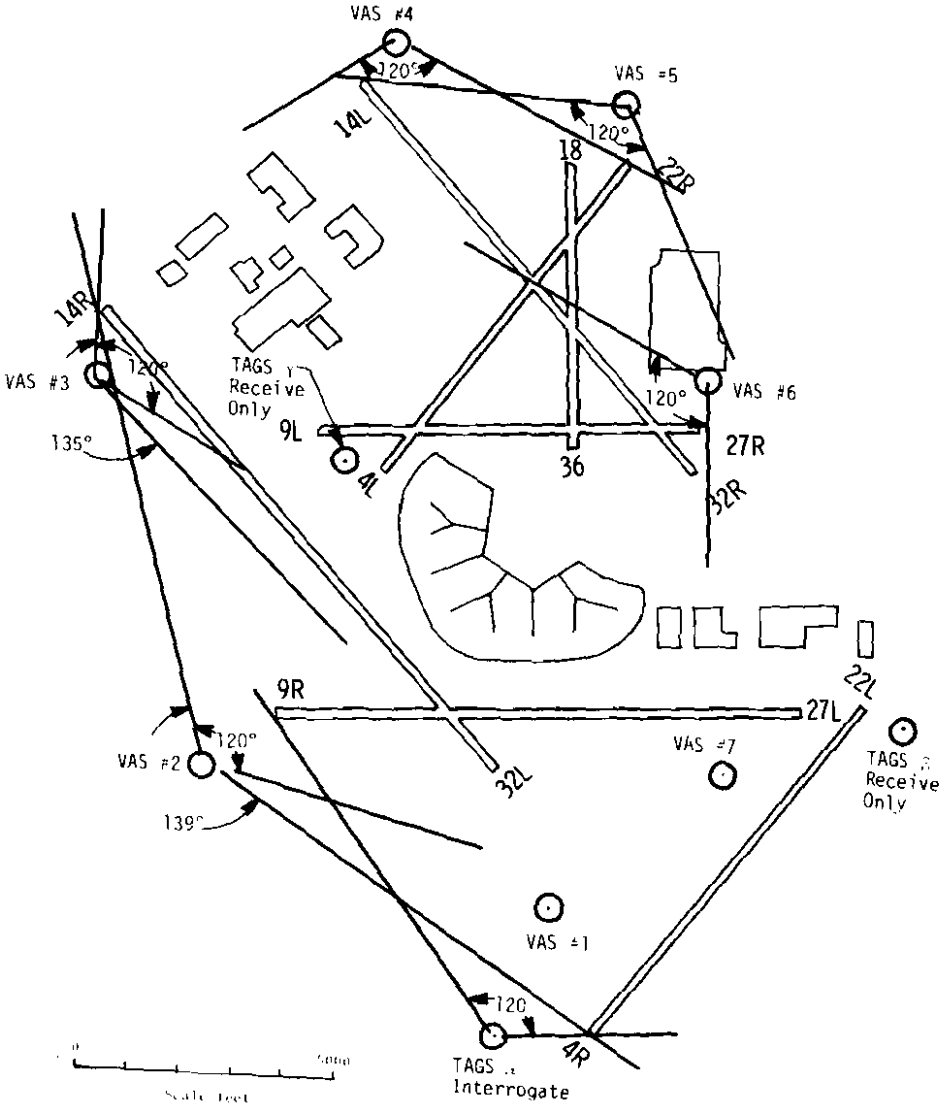

FIGURE 16.1-9. O'HARE VAS DAS SITE COLLOCATIONS

TABLE 16.1-4. VAS SITE USE FOR TAGS SENSOR LOCATION

VAS Location	Baseline Length		Use
1	(1-2)	7200'	Not usable due to severe GDOP and Interrogation Cell Distortion
	(1-7)	4200'	
2	(2-3)	7700'	Usable in conjunction with #3 to cover 32L/14R
3	(2-3)	7700'	Usable with #2 (above) and with #4, primarily to cover 27R/32R thresholds
	(3-4)	8600'	
4	(3-4)	8600'	Usable with #5 and #3 to cover northern half of O'Hare
	(4-5)	4500'	
5	(4-5)	4500'	See #4 above
6	(5-6)	5600'	Not usable due to 120° antenna coverage limitations and blockage by USAF site
7	(1-7)	4200'	Not usable due to severe GDOP and Interrogation Cell distortion
	(2-7)	11000'	

TABLE 16.1-5. RUNWAY COVERAGE FOR TAGS INTERROGATORS SITED AT CURRENT VAS LOCATIONS

14L/32R	Pair 4/5 covers entire runway, with interrogation cell distortion at 32 threshold. 32R threshold covered by pair 3/4
9L/27R	Pair 4/5 covers entire runway except for 9L and 27R thresholds. 27R threshold covered by pair 3/4. 9L threshold covered by pair 2/3
18/36	Pair 4/5 covers entire runway, with interrogation cell distortion at 36 threshold covered by pair 3/4
4L/22R	Pair 4/5 covers entire runway, with interrogation cell distrotion by 4L threshold. 4L threshold covered by pair 3/4.
14R/32L	Pair 2/3 covers one third of the way from 14R threshold. Pair TAGSα/VAS #2 covers remainder, using additional antenna coverage at site #2.
9R/27L	Pair 2/TAGSα covers entire runway.
4R/22L	Pair 2/TAGSα covers entire runway.

1. VAS #1 and #7 are both inside runway 4R/22L. GDOP for targets on the extended 2-7 and 1-2 baselines would be unacceptable.

2. The interrogation cell width for each of the 1-2 and 2-7 pairs degenerates to a straight line where the baselines intersect runway 4R/22L. Providing adequate interrogation at these points would require all three sites (1, 2 and 7) to be interrogator equipped; a luxury, considering that blockage from airport buildings is not a problem in the southern half of the airport.

Adding TAGS site γ, as shown in Figure 16.1-7, and extending VAS #2 antenna coverage to 139° as indicated provides full interrogator coverage of runways 4R/22L, 9R/27L and 32L. TAGSβ, reveive only, fulfills receive coverage requirements with minimal GDOP as the majority of runway and taxiway surface is within the triad.

The resulting TAGS sensor deployment requires 5 interrogators, four of which are collocated with VAS sites, and two non-collocated receive-only sites.

16.1.5 Cost Impact of Shared Siting - O'Hare

Costs identified as being eliminated by the exact collocation of the VAS and the DAS towers are shown in Table 16.1-6. The $23K estimate per VAS site does not include, for example, VAS tower erection, electronics housing, and electrical hookup costs unique to VAS. New access road construction at O'Hare is limited due to the nearness to existing airport roads; an average road length of 100 feet per site was estimated. The total cost savings for the four site collocation is estimated at $104K. As Table 16.1-7 shows, the 4-site collocation represents about 5 percent of total system acquisition and installation costs. If all VAS sites could be located with DAS sensors, about 9 percent of total acquisition costs could be saved. This latter possibility would depend, in the case of the O'Hare installation, on the VAS sensors being moved to a TAGS location, not vice versa, as discussed previously.

TABLE 16.1-6. VAS COST ITEMS ELIMINATED FOR COLLOCATION OF SENSORS

Item	Per Site Cost
Site Ground Preparation	$ 1K
Tower Pads (Concrete)	3K
New Cable Duct Runs @ 2000' ($5.50/ft. installed, cable included)	11K
Access Roads ($20/Ft) 100'/Site	2K
Civil Engineering 25 work-days @ $90/day	5K
Contract Supervision 12 work-days @ $190/day	2K
Accessholes/Junctions	2K
	$26K

TABLE 16.1-7. COST SAVINGS AS A PERCENTAGE OF TOTAL SYSTEM INSTALLATION COSTS - O'HARE (DOLLARS)

Collocation Config.	DAS* Costs	VAS* Costs	Collocated Total Costs	Cost Svgs.	Savings as % of Total
4 sites	$1679K	$486K	$2061K	$104K	5%
7 sites	$1679K	$486K	$1983K	$182K	9%

*Acquisition costs included are for 8 site TAGS configuration (see Table 16.1-2, 3)

Table 16.1-8 shows the savings expressed as a percentage of installation costs only, excluding system hardware acquisitions except that data link and cabling costs are included. The second and third table entries show savings as a percentage of the costs the regional Airway Facilities would incur, ranging from 14 to 22 percent for land-line and microwave, respectively.

TABLE 16.1-8. COST SAVINGS AS A PERCENTAGE OF INSTALLATION COSTS EXCLUSIVE OF ACQUISITION COSTS - O'HARE (DOLLARS X 10^3)

Configuration	DAS Alone	VAS Alone	Total Collocated*	Svgs.	% of Total
Microwave**	640	186	722	104	14%
Landline***	497	186	579	104	18%
Microwave (Installation costs only)	400	186	482	104	22%

*Assumes 4 sites collocated

**Includes $240K Microwave hardware costs

***Includes 24K cable costs

16.1.6 Extension of the Analysis to Los Angeles International Airport

Los Angeles International Airport was examined using the same constraints applied in the O'Hare siting study. No previous TAGS siting estimates had been made for LAX, but a preliminary VAS siting investigation resulted in four tower sites serving all 8 runway touchdown areas.

16.1.6.1 LAX VAS Siting - LAX is projected to require only 4 VAS towers to cover all runways because its two sets of closely spaced parallel runways allow one tower to serve each end of a pair of runways. All of the ideal VAS tower locations as depicted in Figure 16.1-8 either lie off airport property or are within on near areas of building construction. As a result, the chosen locations (Figures 16.1-10) are either closer to or farther from

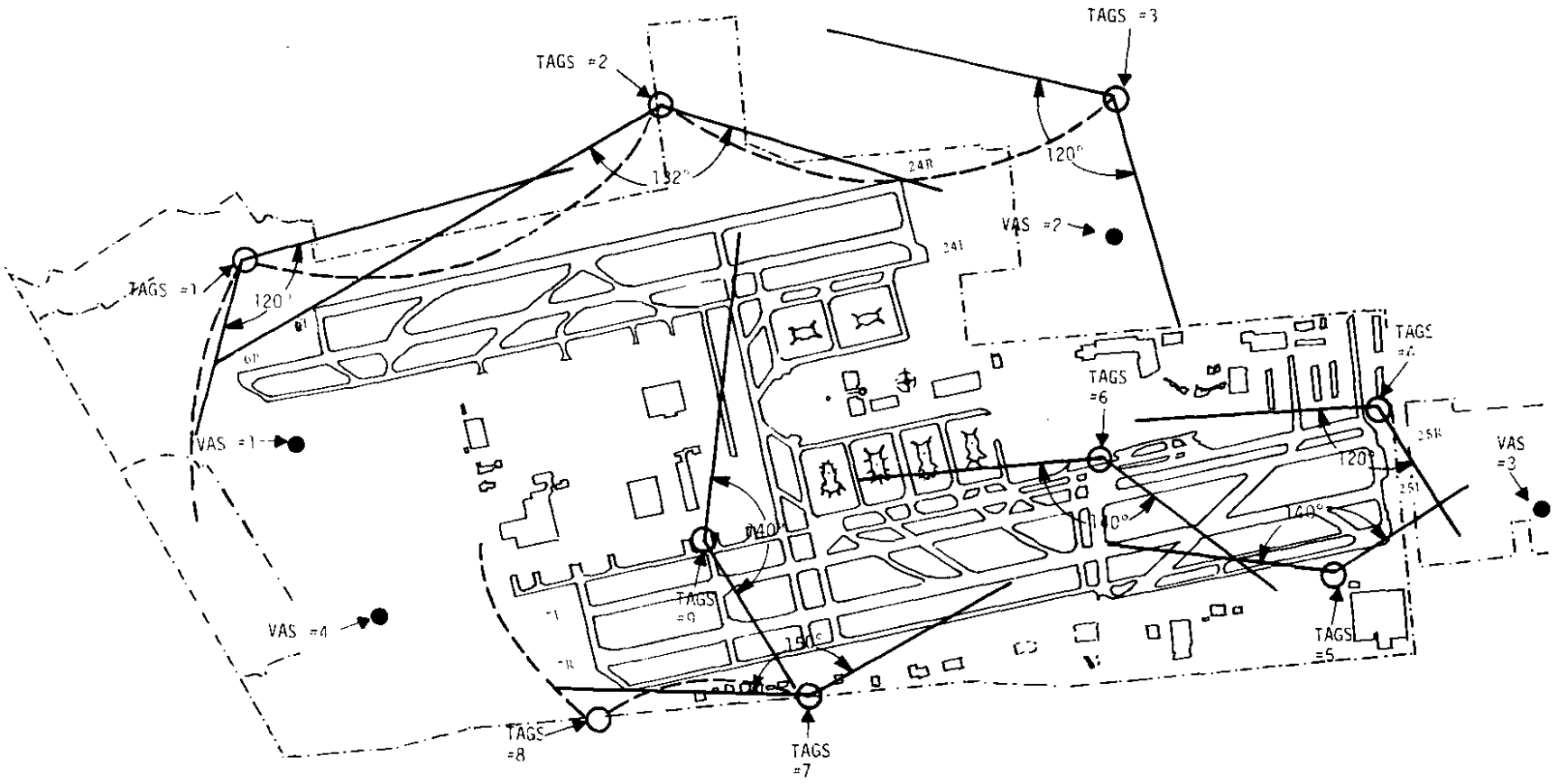

FIGURE 16.1-10. INITIAL LOS ANGELES TAGS SITING

the runway threshold than the ideal case in order to meet obstruction zone requirements. Because the VAS towers cannot be near the runway centerline in order to prevent aircraft vortices from disturbing wind readings, the proposed towers have little flexibility in lateral placement. Relocating site #3 to the north of runway 25R would be off airport property. Relocating sites 2 and 4 to the other side of their respective runway complex centerlines would place them close to residential buildings, trees and roads (Imperial Boulevard - Site 4) which can alter the wind patterns being measured. VAS site #1 is the only one that could be considered for relocation.

16.1.6.2 LAX TAGS Siting Constraints - The physical aspects of Los Angeles International Airport are considerably different from O'Hare for two reasons: (1) LAX has a centrally located taxiway that is shielded by the terminal complex to the East and the hanger complex to the West, and (2) the southern airport boundary is very close to the AMA.

A preliminary DAS siting (constrained by not allowing DAS location on building tops) shown in Figure 16.1-10 requires 9 interrogator sites for total coverage. To cover the North side (runways 6 and 24) three interrogator sites are adequate because newly acquired (or to be acquired) airport property allows the sites to be sufficiently distant from the runways to minimize interrogation cell distortion caused by large null beam crossing angles. The dashed lines on Figure 16.1-10 represent the minimum acceptable null beam crossing angle contours as discussed in Section 16.1.2.1. The South side cannot use the same efficient location because the airport boundary and southern hangar complex closely flank the AMA. The six southside interrogator sites shown in Figure 16.1-10 provide coverage of runways 7 and 25, but sites 4 and 6 are within 600 feet of the taxiway and may be affected by transponder saturation. The central taxiway can be covered by interrogator #9, operating in conjunction with interrogators #2 and #3 for the northern half and with #7 for the southern half.

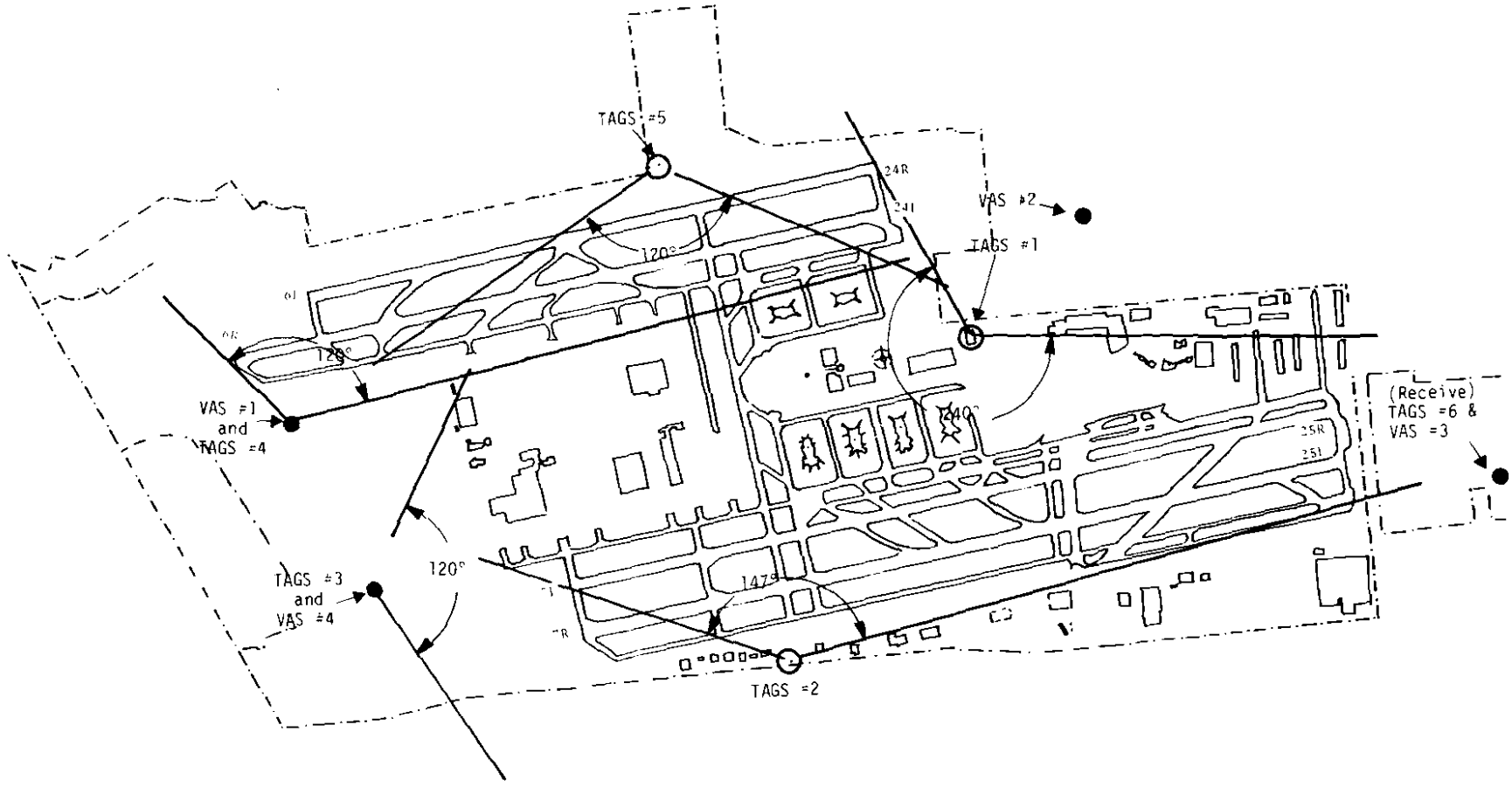

FIGURE 16.1-11. TAGS/VAS COLLOCATION

The long narrow aspect of the LAX layout limits the maximum extension of the North-South TAGS triad dimension, particularly severe on the southern side where the obstruction-free North-South dimension is limited to 2000 feet. The triad dimensions cannot deviate significantly from the ideal equilateral case farther than the 39° limit discussed previously. Consequently, the restrictive North-South dimension dictates the use of a larger number of small triads, as shown on Figure 16.1-10. This motivates the consideration of the airport control tower, an ideal location for a central interrogator. Having a clear view of the entire airport surface, a tower-located TAGS interrogator allows the North-South triad dimension to be increased, reducing the number of sites. In fact, a tower mounted interrogator configuration was discussed in a MITRE report concerning a version of the TAGS system using only a central interrogator without the outlying interrogation stations.[3]

16.1.6.3 <u>LAX TAG/VAS Site Collocation Using Control Tower Interrogator Location</u> - Figure 16.1-11 is a second TAGS siting that features a centrally located control tower interrogator with four outlying interrogators and one receive-only site. The control tower site requires 240° coverage, obtained by two 120° interrogator antennas. The resulting siting more readily makes use of the proposed VAS locations. As shown, two interrogators and one receive site share VAS locations. Locating a DAS site with VAS #2 would neither add new coverage nor replace any of the sites shown. VAS #2, as noted earlier, cannot be relocated to the north of runway 24R centerline due to the proximity of trees and buildings.

Table 16.1-9 discusses the resulting coverage for each runway for the above siting. Coverage of the AMA is adequate with interrogation cell crossing angle reduction to 32° in a small

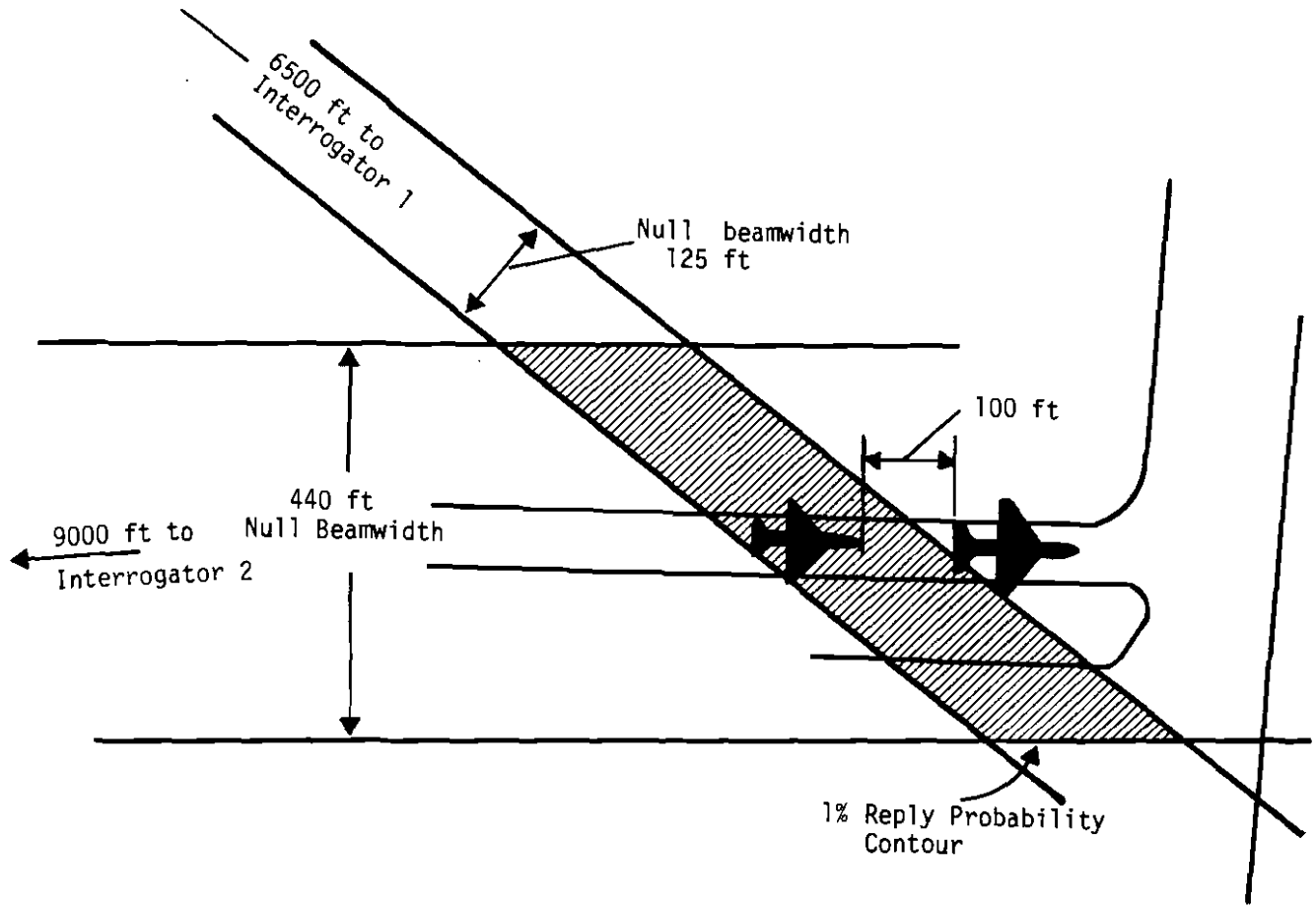

FIGURE 16.1-12. INTERROGATION CELL DISTORTION ON TAXIWAY NEAR 25L THRESHOLD (LOS ANGELES)

TABLE 16.1-9. RUNWAY AND TAXIWAY COVERAGE FOR TAGS LAX INTERROGATOR SITING

7R/25L and outer taxiway	Pair 1-2 covers from midpoint to 25L threshold within 30° contour. Cross-null half width* grows to 220 ft. due to steering 67° off-boresight. Pair 1-3 covers 7R threshold to within 2000 feet of 25L threshold within 39° contour. Pair 1-3 provides redundant coverage of 25L threshold but with cell distortion (null crossing = 30°)
7L/25R and inner taxiway	Pair 1-2 covers from midpoint of 25R threshold within 36° contour. Pair 1-2 covers from 7L threshold to 3500 ft from 7L threshold within 39° contour. Off-boresight angle becomes 78° at 7L threshold, corresponding to a half width* null growth to 200 ft. Middle of 7L/25R is covered by both pairs 1-3 and 2-3 within 39° contour.
6L/24R	Pair 1-4 covers entire runway within 39° contour. Pair 104 baseline is 10K feet, but the zone of non-suppression does not coincide with actively scanned AMA.
6R/24L and taxiway	The overlap of 39° coverage contours from the pairs 4-5, 1-5 and 1-4 covers the entire runway and taxiway with the exception of 400 ft. of the runway and 1500 ft of the taxiway located 3000 ft from 6R threshold. Coverage in these regions falls within the 32° null crossing contour. No critical exits or ramp entrances are within the affected area.

*at the 1% P reply point

region on runway 7R, and to 36° on runway 25 threshold. Otherwise, all interrogation cells are within the 141° to 39° contour. Off-boresight null beam broadening for TAGS #2 occurs at the end of runway 25L and 7L where the interrogation half-null width at the 1 percent reply point becomes 220 feet. As shown in Figure 16.1-12 the consequence of the resulting cell elongation depends on the angle at which the broadened null beam crosses the taxiway and runway. In this case the long cell dimension is perpendicular to the taxiway and therefore is not the pacing determinant of interrogation cell resolution.

16.1.6.4 Cost Impact of Shared Siting--LAX - The cost items eliminated by the sensor collocation developed for O'Hare shown in Table 16.1-6 are used for the LAX case as well. Thus the 3-site total estimated savings for the LAX collocation is $78K.

VAS acquisition costs are assumed to be made up of the same elements as in the O'Hare case. Table 16.1-10 presents the LAX VAS cost estimate. TAGS acquisition component costs differ from O'Hare due to the added antenna required for the control tower interrogator locations. Table 16.1-11 presents the LAX TAGS cost estimate. As shown in Table 16.1-12, the cost savings as a percentage of total system costs (acquisition and installation) are the same as found for the O'Hare study. Savings as a percentage of installation costs only, representative of regional expenditures, range from 21 to 24 percent. Savings, compared thus, are slightly higher than found for the O'Hare case.

16.1.7 Summary and Conclusions

O'Hare, due to its configuration readily accommodates VAS/TAGS sensor collocation with little compromise for four out of the 7 VAS locations. Three of the VAS locations are such that TAGS siting is not feasible even allowing minor VAS

TABLE 16.1-10. LOS ANGELES VAS SENSOR INSTALLATION COSTS

1. Acquisition Costs	
Towers	
Sensors/Electronics	
Processor	
Display	
	$170K
2. Installation Cost	
Tower Foundations	
Tower Erection	
Electrical Terminations	
Underground Cabling	
Power	
Access Roads	
Civil Engr./Supervision	
30% Contingency	
	$107K
3. Total Cost (Acquisition & Installation)	
	$277K

TABLE 16.1-11. TAGS TRILATERATION SENSOR HARDWARE COST ESTIMATE

	Microwave Link	Land Line*
1. 6 Site Hardware Acquisition Costs (based on buy of 9 TAGS Systems in 1980) 5 Interrogator Stations* 1 Receive Stations 1 Central Control Station 1 Processor/Display	$1300K (includes $30K/ site for Micro- wave hardware)	$1165K (includes 15K cable costs)
2. 6 Site Installation Costs Foundations Tower/Shelter Erection Electrical Terminations Communication Installation Power Access Roads Civil Engineering/Supervision 30% Contingency	$295K	$341K
3. Total Costs (Acquisition & Installation)	$1595K	$1506K

*Assumes adequate buried twisted pair cable capacity exists at junction points within 2000' from each DAS site.

*Inclues 30K for additional antenna

TABLE 16.1-12. COST SAVINGS RELATED TO TOTAL SYSTEM COSTS-LOS ANGELES THREE-SITE COLLOCATION

Configuration	DAS Costs	VAS Costs	Collocated Costs	Savings	% of Collocated Costs
1. Total Costs (Acquisition & Installation)	$1506K	$277K	$1705K	$78K	5%
2. Installation Costs Only					
Microwave*	$ 295K	$107K	$324K	$78K	24%
Landline	$ 341K	$107K	$370K	$78K	21%

*excludes microwave hardware costs

relocation. LAX presents a more difficult challenge, but, given the use of a control tower-located interrogator, 3 of the 4 VAS site locations can be shared. Physical constraints at both airports are such that TAGS system performance is significantly less than it would be in the ideal case; collocation of TAGS sensors with VAS as suggested further degrades performance only minimally.

The savings estimated, even when considered only the region's share of installation costs, are at most 24 percent of estimated installation costs (LAX). If adequate buried cable capacity exists from junction points near the sensor sites, the collocation savings drop to 21 percent of the regional share and 5 percent of total system costs, making the consideration marginally worthwhile.

The inclusion of WVAS Ground Vortex Sensor installation and data transmission considerations does not modify the above conclusion for two reasons: the WVAS sensor will most likely be directly located in the approach path (unfeasible for the TAGS towers), and the data rate is estimated to be similar to the VAS sensors (not high enough to require significant data link capacity increase).

O'Hare and LAX are highly developed airports with a network of access roads - in contrast with Dallas-Fort Worth, for example. Should access roads be required for considerable distances for the added TAGS and VAS sites, then greater collocation cost savings would result. For example, if one mile of new access road were needed at $20 per linear foot, $100K of redundant cost could be avoided by a shared road.

Although no TAGS or VAS performance compromise resulted from the collocation, the 5 percent savings is not appreciable particularly when considering that there are certain uncosted factors in the collocation. For example, the installation schedule of the two systems may preclude collocation. New construction not envisioned at the time of this writing may considerably affect TAGS siting validity.

As a minimum, however, the benefits for reducing obstructions to navigable airspace and efficiencies in site contracting work through the Airway Facilities Regional Office may make the collocation worth considering at the time when TAGS and VAS production schedules become realities.

REFERENCES FOR SECTION 16

1. Federal Aviation Regulations, Part 88.25.27.
2. Hobbs, V.J. et al., "Tower-Related Major System Development Programs." FAA-EM-77-16, March 1977, pp. 7-49 and 7-50.
3. Bales, Levin, and Watson, "TAGS Feasibility Analysis of a Single Interrogation Hybrid ASDE/ATCRBS System," MITRE Corp., MTR-7281, July 1976.

17. GENERAL TOWER-RELATED DATA PROCESSING

17.1 ANALYSIS OF GENERAL ISSUES OF INFORMATION PROCESSING

17.1.1 Characterization of Tower-related Data Processing

17.1.1.1 Types of Data and Processing - The tower cab is one of the focal points of an extensive data gathering, processing and display complex. This complex makes available to the controllers in the tower information they need to ensure the proper operation of air traffic into, within, and out of the airport. The input data can be classified as:

- o surveillance data - measurements of aircraft position, including altitude;
- o identification information - codes transmitted by the aircraft which disclose identity or characteristic;
- o flight data - identity, timing and characteristic data which describe aircraft expected or known to be in the system;
- o meteorological data - measurements and predictions of prevailing atmospheric conditions of various kinds in the surrounding airspace;
- o system data - certain fixed, semi-fixed, and regularly changing data describing the state of the ATC system and its environs.

The controller has the task of assimilating the subset of these data that he needs to carry out his particular duties; the subset he requires will vary, depending on his position. Occasionally, he will receive information from an outside source which he will have to store for later use by himself or by other users of the system.

A number of aids have been provided the controller to help him in assimilating, remembering, and using the data. Some of

these aids are, and will continue to be, right for the purpose while others, such as the written or printed flight strip, are near obsolescence and need replacing. On the other hand, new information is being gathered for the controllers' use which will require new mechanisms for handling the data.

The usual task set for the data processing portion of the system is to display to the controller that portion of the airspace of interest to him with an indication of the traffic in that area, to keep a list of the aircraft in, or expected to be in, the area of interest, and to maintain and display the correlation between the targets shown on the display and the identities of the aircraft in the list. In order to maintain this correlation, the data processing system must convert radar target position measurements to its own coordinate system, must maintain the continuity of the tracking of the targets with less than perfect data, must keep the correspondence between target and aircraft identification (ACID), and must format and display the results to the proper controllers.

There are other subtasks which the data processing system must accomplish in the course of doing its main task. These include accepting inputs from other data processors and from controllers via keyboards, modifying the data base and the display outputs to correspond.

In addition to the basic function, the dp system has been called upon to carry out other functions such as conflict detection, metering and spacing, and minimum safe altitude warning. These new functions have an impact on the existing functions, especially the display preparation routines, as well as on the system computation rate and memory requirements.

17.1.1.2 Current Processing Systems - There are in the ATC system at the present time two major data collection, processing,and display systems: the NAS Stage A systems at the ARTCC's and the ARTS III (and soon II) systems at the TRACON's. The NAS system, though providing an input to the tower cab at the present time

(through the FDEP equipment), is remote enough from the cab processing to be ignored in this discussion. The ARTS III data processing system is currently fielded in two configurations, single-sensor and dual-sensor, each made up of Data Acquisition Subsystems (DAS), Data Processing Subsystems (DPS) and Data Entry and Display Subsystems (DEDS).

The Data Processing Subsystem of the single-sensor configuration consists of a single processor, an Input-Output Processor (IOP), so-called, with varying amounts of core storage, 16K to 28K words, depending on terminal location and air traffic load. The DPS also includes a console Teletype and a pair of magnetic tape drives. In the dual-sensor system, the DPS has two IOP's which share the memory, console TTY,and magnetic tape units.

The Data Acquisition Subsystem, sometimes called the Beacon Data Acquisition Subsystem (BDAS), accepts beacon replies from the ATCRBS receiver, digitizes them and assembles them, together with an azimuth measurement, for transmission to the DPS. In the dual-sensor configuration, a BDAS is connected to each sensor and transmits data to one of the processor subsystems.

The Data Entry and Display Subsystem consists of a number of CRT displays and associated keyboards, at least one of which is usually a BRITE display in the tower cab.

Within a short time, the ARTS IIIA program will reach fruition, providing all ARTS systems with a Critical Data Recording (CDR) capability using a disc storage subsystem and upgrading the larger ARTS systems to a multi-processing, fail-safe configuration. These last will also be receiving a new DAS which will replace the existing BDAS. It will be called the Sensor Receiver and Processor (SRAP) and will combine the functions of the BDAS, a similar radar data acquisition subsystem, a target detector for each, and a beacon-radar target correlator. The output of the SRAP, then, will be radar-reinforced beacon target reports and radar-only target reports, complete with range, azimuth, beacon code, where appropriate, and mode C altitude, where appropriate.

At about the same time, the ARTS 1I program will be in the implementation stage, bringing automation to TRACONS and TRACABS at about 70 smaller airports around the country. The ARTS II is similar to ARTS III in concept, with the three subsystems: data acquisition, data processing, and data entry and display. The DPS will consist of a commercially available minicomputer with varying amounts of core memory and magnetic tape and disk storage units.

17.1.1.3 Proposed Processing Systems - The new systems and subsystems which will be introduced as elements of the UG3RD ATC system will each have a data processing requirement of its own. As presently envisioned, each system would satisfy this requirement by means of a computer selected ad hoc without reference to plans for the other systems. In the cases of DABS, AMPS, and TIPS, a conscious effort was made to coordinate the data processing and communications needs of the old and the new. In other cases, no such effort was made, for various reasons: no such interaction was perceived, the system has not been well-enough defined as yet, and similar reasons.

DABS, SRAP II - The functions to be performed by the DABS require that a substantial data processing capability be provided to deal with and to interact with surveillance data gathered by the beacon and primary radar subsystems. This processing capability will be placed at the sensor location and connected to the ATC centers by two-way ground communications links. The message-handling functions of the DABS data-link will be handled by the site-located processors, also, as will the Intermittent Positive Control (IPC) functions, if they are implemented.

The DABS processing capability, then, is dedicated to its own purposes and not available for use by other ATC installations. On the other hand, the processing which takes place there should be exploited by the ATC system as a whole to the greatest possible extent. This will be the subject of discussion in Section 17.2

The SRAP II consists essentially of the ATCRBS and primary radar sections of the DABS sensor, providing surveillance data to an ARTS III center in the form of radar-augmented beacon and radar-only target reports. The functions of target correlation are thus moved from the ARTS Data Processing Subsystem to the sensor site.

TIPS - The data processing systems proposed for use in the TIPS will be standard, commercial minicomputers. As described earlier (Section 8.2.4), there will be two subsystems with processing capability - the Terminal Data Processing Subsystems (TDPS) and the Tower Display Subsystem (TDS). The former will carry out the functions of flight data storage and retrieval and communications processing with NAS, ARTS, and the rest of TIPS. The latter will carry out display formatting and driving and controller interface processing.

TAGS - No definite requirements have been developed for TAGS data processing yet, so one can only speculate on the basis of some preliminary design work and the hypothetical system description given earlier (Section 7.3). The tasks to be performed will probably include; processing of flight data messages from ARTS and/or TIPS, processing of surveillance data from a data acquisition subsystem, tracking of target data, correlation of flight and track data, preparation of display output, and processing of controller inputs. It is possible that a standard minicomputer could be configured to handle these tasks.

Remote Display Buffer Memory - The RDBM is a piece of equipment developed for use with the ARTS III which will drive a number of displays at a site remote from the ARTS processor, while accepting display changes over a phone line connection and controller inputs from attached keyboards. It provides the remote site with essentially the same service a local site gets without the need for a wide-band data link.

VAS, WVAS, and Wind Shear - These three related systems will each require a data processing capability in the Tower or TRACON.

The experimental VAS processor subsystem is described* as a set of six microprocessors which act as preprocessors, sending data cyclically to a VAS processor (again a microprocessor) which computes the Vortex Advisory Algorithm and drives the controller displays. The WVAS will require more computational power than that supplied to the VAS, but the amount is not known at this time. The Wind Shear system will probably need processing capability at about the same level as the VAS.

Other - There may be additional systems or subsystems introduced into the tower cab which require data processing of some kind. Certain meteorological sensors, for example, may produce digital output signals whose values need to be interpreted and displayed in some transformed manner for controller use. Most of these will probably specify individual microprocessors dedicated to specific outputs.

These are the data processing components from which a unified and coherent system should be constructed for use in the tower cab.

17.1.2 General Factors Affecting Choices

17.1.2.1 Programming and Program Maintenance - A major difficulty in the production and maintenance of reliable data processing software is diversity among the computers and programming languages used. From the programmer's point of view, an integrated data processing system, whose parts have a high degree of interaction, should be constructed of equipment of a uniform type so that the programming is done in a single, system-wide language. This is true during initial system development, when additions or enhancements are made to the system, and especially when modifications or corrections must be made to eliminate faults in the system.

---

*See Section 10.2.2 of the second interim report.

The most straightforward and simplest approach would be to build the system from a single processor or processors of a single type so that the programmer would not have to be aware, from a language point of view, of the processor for which he was writing code. There are a number of reasons why this situation probably will not occur. First of all, in this building-block approach, the basic block must be capable of doing the largest task called for in the system. In the case of a single processor, it must be sized to do the whole; in the case of multiple processors, the size of the largest task fixes the processor size and smaller tasks may be assigned to processors which would end up with excess capacity. Secondly, systems developed at different times by different contractors will specify equipment as diverse as the tasks to be performed.

The development and use of a family of computers, such as the IBM System 360/370 family or the DEC PDP-11 family, which has a high degree of software compatibility would take care of the first objection but would not address the second unless the government were to select such a family and specify it in advance. Note that the DOD has made certain steps in that direction.

Another possible solution to the programming difficulty has been the use of a higher order language, such as JOVIAL, FORTRAN, or one of the DOD supported languages. Theoretically, a program, written in a higher-order language, compiled and run on a set of dissimilar computers will produce identical results on all of them. As a practical matter, this is not true for a number of reasons, which range from incomplete or ambiguous language specifications to architectural incompatibilities between machines and the language. Therefore, in this case, the higher order language approach will not solve all of the programmers problems.

Clearly, there is an advantage to the programmer if he has to deal with a familiar situation rather than to learn new procedures. At the same time, it is important to the productivity of the programmers that they deal with simple, structured

situations. Both of these considerations point toward the use of a single-well-thought out computer system, not necessarily of any one particular architecture but structured in a way that allows easy modification and enhancement.

Those with responsibility for program maintenance are even more aware of the problems and pitfalls of a patchwork system than the original programmers, for they must deal with all parts of the system equally and must be conversant with all of it. A system made up of dissimilar computers with incompatible languages is difficult to work with in any case, but there is the more serious problem of subtle,but possibly very serious errors,arising from the very lack of consistency in the hardware and software.

17.1.2.2 Equipment Maintenance and Parts Supply - From the point of view of those charged with maintaining computer systems, the ideal system would be made of a number of identical modules, the integrity of each of which could be easily ascertained and the replacement of which would be trivially easy. Short of this perfect situation, the systems would be best which minimized the number of parts, the number of types of parts, the number of technologies involved, the number of kinds of trouble-shooting procedures, etc. A system with one processor, or a set of identical processors, would most nearly meet those requirements, with one using a family of computers next. Not all families are made with a uniform technology, however, so this may or may not be a good solution.

Clearly, systems which use equipment already in the inventory pose fewer problems, other things being equal, than those which introduce new equipment.

Another aspect of maintenance cost is the cost of training people to do the work. Each new piece of computer, or computer-related, hardware brings with it the need to set up and run training courses for system maintenance personnel.

17.1.2.3 System Installation - Where space is at a premium, it is clearly better not to introduce new equipment if the old can be made to serve. Furthermore, the costs of increased power and air conditioning must be included in any analysis of new equipment to be installed.

17.1.2.4 System Designer/Developer - The system designer has a special viewpoint: he wants as few constraints as possible on his design efforts. The constraints imposed by the performance requirements and the interactions with other systems lead him to make certain choices which result in what he regards as the 'best' system design. Additional constraints in the form of pre-specification of subsystem equipment or of interdependencies with other systems could result in choices leading to less than the 'best' system.

17.1.3 Specific Factor Affecting Choices

There are a number of factors which should be considered in an analysis of the tower cab system which are specific to the ATC system itself. Chief among these are the flow of information among the elements and the interfaces that exist between them. Whatever commonalities exist between elements are important as well.

17.1.3.1 Information Flow - The first factor to be examined in assessing the integration of data processing functions is the overall flow of information into, through, and out of the combined system. The first step is to look at each of the candidate systems to determine

a) What sensors are involved?
b) What data does each one produce?
c) What form is the data in?
d) What is the data rate to the processor?

e) How is the data processed?

f) How much and for how long is the data stored?

g) How is the data prepared for output?

h) What is the output data rate?

In other words, it is necessary to characterize completely the input stream, the data processing and storage functions, and the output stream for each system.

One of the tools used to study the information flow in systems is the Hierarchical Input - Process - Output (HIPO) chart. Each such chart lists all of the inputs to a single module of a system as well as the processes carried out in the module and its outputs. The module may be of any size and complexity as long as it can be isolated from other modules by well-defined interfaces. Furthermore, if each module is broken down into sub-modules for which similar charts are constructed, and then the sub-modules broken down, etc., then the set of modules and sub-modules can be said to be hierarchical and the charts are properly HIPO charts. An example of such breakdown will be found in Section 17.2.1, below.

These charts provide a means for studying the static relationships among the modules. The interfaces between them are clearly defined and the sufficiency of the data flow in both form and space may be observed. That is, the requirements for data of a particular type are known to exist at a particular place in the system and the form the data must be in is also known. A trace back across each modular interface to the source of the data, be it sensor or data store, will show whether or not there is a logical and complete link from source to user. In case there are gaps found, the problem area should be apparent.

This HIPO analysis being static, however, cannot reveal the dynamic relationships among the modules and the data which they interchange. An additional study of the timing and synchronism among the system elements is called for to ensure that each datum is available not only in space and form but also in time.

17.1.3.2 System Interfaces - The interchange of information across the system interfaces requires special attention. Obviously, there must be physical compatibility, but beyond that there must matching in format, rate,and protocol.

17.1.3.3 Common Input/Output - The displays and keyboards which provide the interface between the system and the real world have similar characteristics from element to element, so it is natural to suggest that they be shared among elements, thus effecting a saving in space and cost. If the form of the sharing is carefully described, as it is in Section 13.8.1.2, for a shared keyboard, then the effect on the data processing portions of the systems can be estimated.

17.1.3.4 Other Commonalities - Examination of the system elements may reveal other areas of commonality among some of them. Communications and bulk storage are two functions where standard techniques have been developed which would be applied to the tower systems, leading to the possibility of the sharing of resources.

17.1.3.5 Characteristics of the Processing - In order to assess the probable performance of the various data processing elements and their relation to one another, it is important to catalog the characteristics of the processing to be carried out. There is no single way of measuring the performance requirements for a computer program, or the capabilities of a computer system, for that matter. Obviously, the storage requirements for program and data are significant parameters, as is some measure of the required computation rate. This rate is determined from some combination of throughput requirement, reaction time requirement, amount of computation vs. amount of input/output processing, the complexity of the program, and the architecture of the processing system. At the present time, there are only ad hoc methods available to specify system requirements and computer characteristics, hence no specific techniques can be described here.

Other considerations involve the amounts and types of buffering required, amounts of long-term as against short-term storage required and the overall duty-cycle requirements, e.g., peak vs. average loading.

17.1.3.6 Operational Characteristics - Any assessment of the possibilities and problems of integration of the system elements should address the requirements for reliability that ATC systems must meet. This reliability might be the result of the basic design of the system element or the result of redundant data paths and/or equipment derived from adding new systems to the old. For example, the data path between the ARTCC and ARTS could be left intact as a backup for a new ARTCC-TIPS-ARTS data path when TIPS is installed.

Other functions that must be considered are the matters of start-up and start-over, each of which may be straight-forward with respect to a single system, but could be troublesome when multiple systems are interconnected in some fashion.

17.1.3.7 Summary - The list of areas of concern given above is probably not complete but does give an indication of the range of factors to be considered in evaluating the integration of the MSDP elements. Many of the characteristics discussed are mutually contradictory, so that any choice between them will require a tradeoff after some exercise of judgement.

17.2 ANALYSIS OF FUNCTIONAL ASPECTS OF TOWER CAB SYSTEMS

Six basic combinations of MSDP systems in tower cabs are identified and described in Table 12.4-2, where they are labeled as classes A-F, from largest to smallest. Block diagrams of the three largest combinations of systems are included here in a series of figures starting with 17.2-1. These show the major data paths between the components of each system and between the systems. At this level, each system is considered to be complete unto itself with no sharing of input/output devices or processors. The data transfers between systems are taken to be between the data processing subsystems of each system.

Following each block diagram is a set of Hierarchial Input-Process-Output (HIPO) charts, one for the whole tower-TRACON (or TRACAB or tower alone) followed by others for the individual systems and/or subsystems. Again, the emphasis is on the functions being performed by the data processing components of the system or subsystems.

After all this data is presented, the actual interfaces between the systems are examined and the data flow is analyzed in detail. The results of this analysis are then used to formulate a set of recommendations and conclusions about the way the processing portions of new systems should be implemented.

17.2.1 Functional Description of the Systems

17.2.1.1 Class A Equipment - A Class A tower cab is defined in this study to be one which will be equipped with all of the major and minor MSDPs systems. A block diagram of such a tower cab and its environs is given in Figure 17.2-1. The diagram is divided into six areas which represent the remote sensors, remote processors, the tower cab, remote tower cab, TRACON and ARTCC. The systems are represented by blocks for sensors, processors, displays and keyboards, connected and interconnected appropriately. Some of the blocks contain the names of more than one system, e.g., ATCRBS/DABS, or VAS/WVAS/Wind Shear, to indicate both that they are alternatives one for the other and that they have a

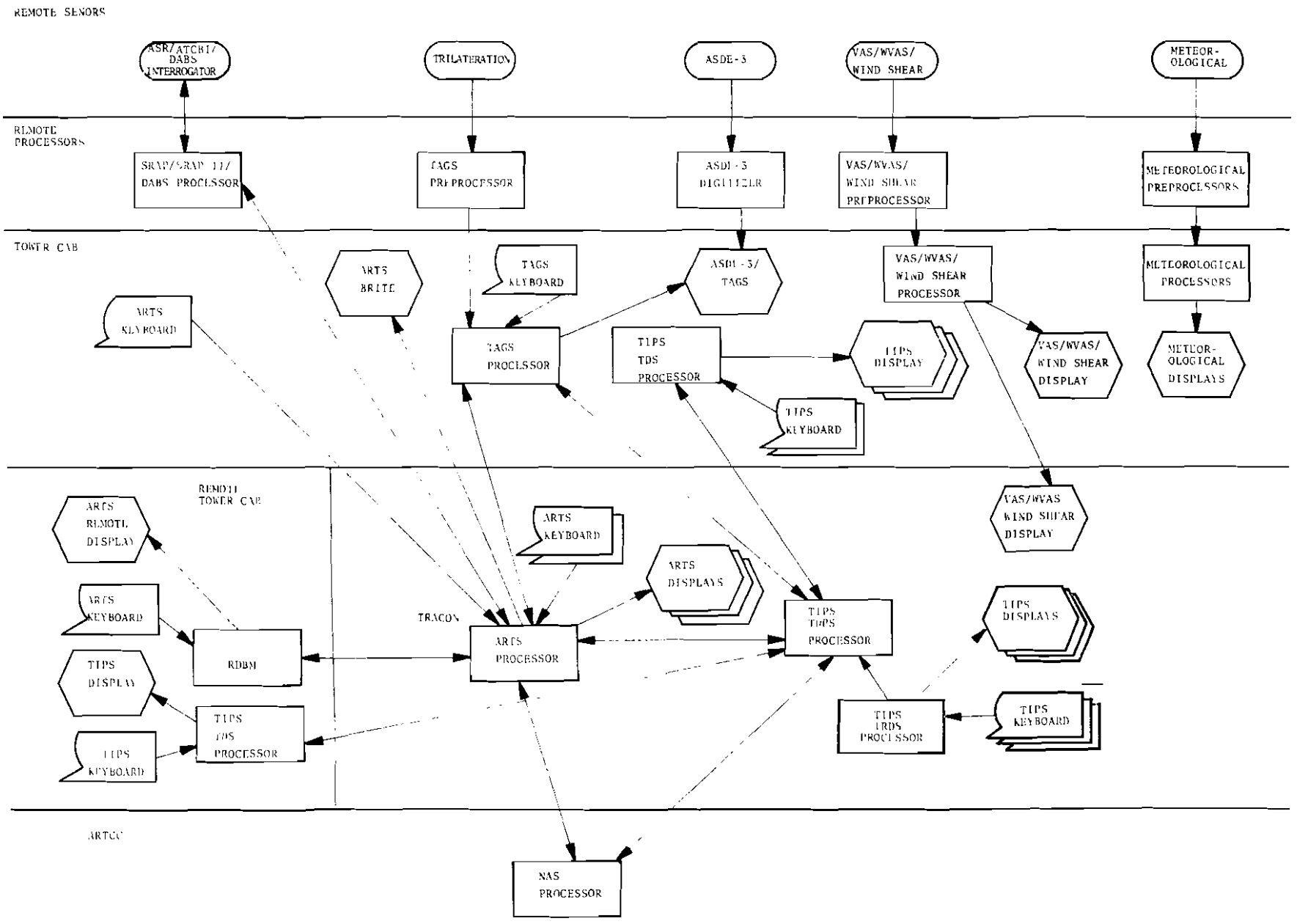

FIGURE 17.2-1. BLOCK DIAGRAM OF CLASS A EQUIPMENT

functional similarity at this level. In the discussion which follows, all possibilities will be included.

The HIPO chart in Table 17.2-1 shows the data input to the Tower/TRACON complex by the sensors of the various systems and by the computer at the ARTCC. These data are classified as being of one of five types:

1) Surveillance data - giving aircraft positions
2) Flight data - giving aircraft identifications and flight intentions
3) Control and Supervisory - giving instructions to the system to react in some way
4) Meterological, Atmospheric and other data - giving information about the airport environment
5) Data Link data - giving messages from aircraft

The major information types within each of these categories is briefly described and the system, or system component, through which the data is delivered to the Tower/TRACON is cited.

The second column, Process, in this highest-level HIPO chart, lists the processing which takes place in the complex in five categories, with the major types within the categories and the systems where the processing is performed. The categories are:

1) Surveillance processing - perform calculations on surveillance, flight and other data to produce derived and predicted aircraft performance, position/identity correlation and status monitoring
2) Display processing - generate display tables, display command chains and the like to cause specified sets of data to be output to specified display devices
3) Flight Data processing - maintain and modify as required flight plan information for aircraft in or about to enter the controlled airspace

4) Message processing - interpret and transmit to appropriate process or system messages input via keyboards or communications links

5) Other processing - as the name implies

Finally, the third column of the chart lists the data outputs from the complex grouped into three categories:

1) Displays - output to controllers in tower cab and TRACON

2) Messages to ARTCC - control, supervisory and flight data information generated in the tower/TRACON

3) Data link data - messages to be transmitted to aircraft.

The next levels in the Tower/TRACON hierarchy are made up of the individual systems (or subsystems) which make the complete implementation. They are shown in the block diagram, Figure 17.2-1. The HIPO charts for the next two levels are given in Tables 17.2-2 through 17.2-13; the relationships among the HIPO charts is diagrammed in Figure 17.2-2. Note that this arrangement is somewhat arbitrary for a couple of reasons: 1) the systems or subsystems at level 2 are not all of the same complexity (e.g., RDBM and TIPS) and 2) some of the systems which have been isolated could be more properly shown as subsystems of another (e.g., SRAP/SRAP II is the Data Acquisition Subsystem of ARTS III). However, the breakdown shown here is adequate and convenient for present purposes. The levels of concern here are the third level for TIPS and TAGS and the second level for the rest.

There are two cases to consider; one is where the tower cab and the TRACON are collocated while the other is where the tower cab is remote from the TRACON. The former, exemplified by Atlanta, Los Angeles, and Chicago - O'Hare, is the usual case. The tower at New York - Kennedy is the only example of the latter considered here.

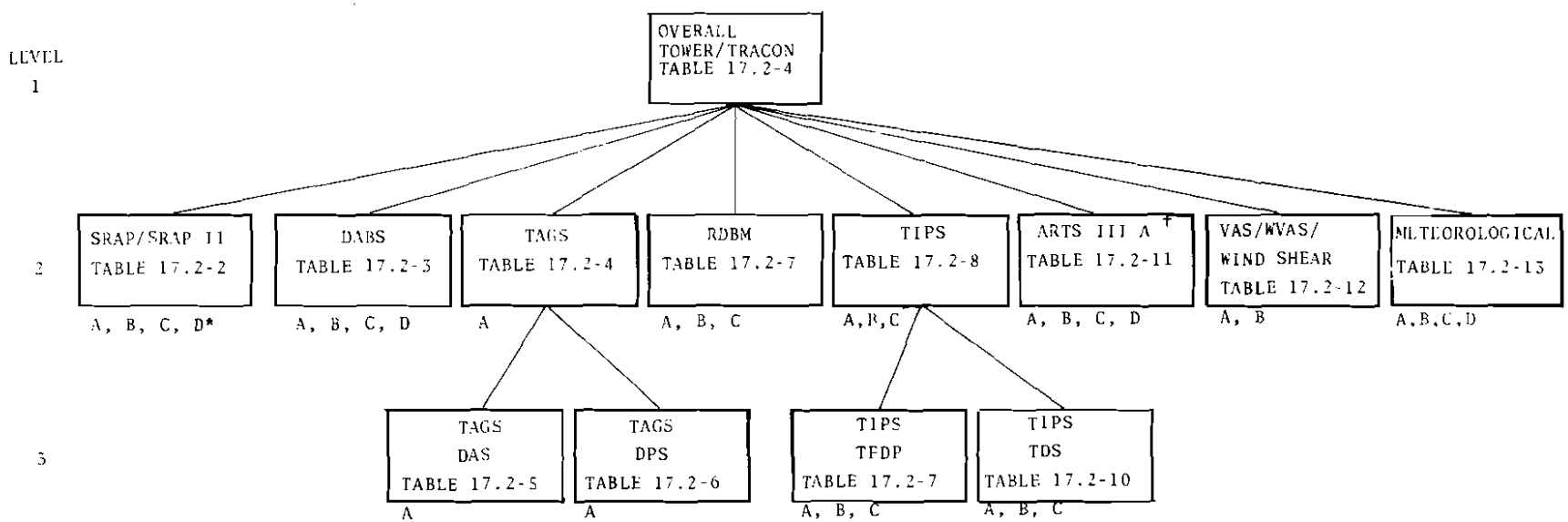

*Equipment classes to which the system belongs.

†ARTS III A in Classes A and B, ARTS III in Classes C and D

FIGURE 17.2-2. TOWER/TRACON SYSTEM HIERARCHY

TABLE 17.2-1 HIPO CHART - OVERALL TOWER/TRACON

INPUT	PROCESS	OUTPUT
Surveillance Data . For each a/c within range 1 to 60 miles from radar: Range, aximuth (ASR) . For each beacon a/c: Range, azimuth, altitude beacon code (ATCBI, DABS) . For each beacon a/c on airport surface: position, beacon code (TAGS) . For cross-tell a/c: position, ACID, beacon code (ARTCC)	Surveillance Processing . Accept and process surveillance data, track a/c, correlate with flight data. (ARTS, TAGS) . Perform MSAW, M&S, Conflict Alert calculations (ARTS) Display Processing . Prepare displays of data blocks (ARTS, TAGS) . Prepare displays of tabular lists (ARTS, TAGS, TIPS)	Displays . Data blocks: ACID, altitude, speed, etc. (ARTS, TAGS) . Tabular lists: arrival, departure, ACID beacon code, etc. (ARTS, TAGS, TIPS) . Airport status, weather (ARTS, TAGS, TIPS) . Clearances (TIPS) . Vortex advisory or prediction (VAS/WVAS) . Wind Shear warning (Wind Shear) . Temperature, visibility, etc. (meteorological)
Flight Data . For each a/c filing IFR flight plan or amendment: ACID, assigned beacon code, arrival/departure fix, ETA/PTD (ARTS/TIPS keyboard, ARTCC) . Clearances (TIPS keyboard)	Flight Data Processing . Accept and process flight data (ARTS, TAGS, TIPS) . Accept and process flight data modifications (ARTS, TAGS, TIPS)	Messages to ARTCC . Flight plan submissions, changes and cancellations (ARTS, TIPS) . Cross-tell surveillance data (ARTS) . Hand-off messages (ARTS)
Control and Supervisory Data . For each a/c, as appropriate: handoffs, Delete messages (ARTS/TIPS keyboards, ARTCC) . As appropriate: Reconfiguration (ARTS/TIPS keyboards) Display format (ARTS/TIPS keyboards)	Message Processing . Accept and process keyboard inputs (ARTS, TAGS, TIPS) . Accept and process data link messages, prepare outgoing data link messages (ARTS)	

TABLE 17.2-1. HIPO CHART - OVERALL TOWER/TRACON (CONTINUED)

INPUT	PROCESS	OUTPUT
Meterological, Atmospheric and Other Data . NOTAMS, ATIS, Airport status (ARTS/TIPS keyboards) . Wind Measurements from selected locations (VAS/WVAS) . Wind and other measurements (Wind Shear) . Temperature, visibility, etc. (Meterological) Data Link Data . Messages from a/c (DABS)	Other Processing . Accept and process observations to produce vortex advisory or prediction, wind shear warning (VAS/WVAS/Wind Shear) . Prepare runway and beacon code assignments (ARTS, TAGS, TIPS) . Accept and process meterological data (Meterological)	Data Link Data . Messages for a/c (DABS)

TABLE 17.2-2 HIPO CHART - SRAP/SRAP II

INPUT From Sensor	PROCESS (SRAP and SRAP II)	OUTPUT To ARTS
(SRAP and SRAP II) . Triggers . Azimuth Reference Pulses . Azimuth Change Pulses	. Digitize primary and beacon signals . Detect presence of targets . Decode beacon reply . Perform sweep to sweep correlation of radar returns	. Beacon and Radar - beacon target reports: . Range to 1/64 n. mi. . Azimuth to 0.88° (SRAP) 0.22° (SRAP II) . Beacon Code Altitude Code confidence
For each primary radar pulse: . analog received signal for range 0-64 n. mi. (SRAP)	(SRAP) . Compute beacon target positions via sliding window (SRAP II)	. SP1, X bit indications Radar-augmentation indicator
For each interrogator pulse: . analog received signal for range 0-64 n. mi. (SRAP II)	. Compute beacon mono-pulse target positions (SRAP and SCRAP II) . Correlate beacon and radar targets	. Radar-only target reports: Range, azimuth . Weather map . Alarms
For each beacon interrogator pulse: . analog sum, difference and omni signals for range 0-64 n. mi.	. Prepare target data for output . Compute weather and clutter maps	

TABLE 17.2-3 HIPO CHART - DABS

INPUT	PROCESS	OUTPUT
<u>From Sensor</u> . Triggers . Azimuth Reference Pulses . Azimuth Change Pulses For each primary radar pulse: . analog received signal for range 0 - 64 n.mi. For each DABS or ATCRBS interrogator pulse: . analog sum, difference and omni signals for range 0 - 64 n. mi. <u>From IPC processor</u> . IPC commands for the data link <u>From ARTS</u> . ATC commands and messages for the data link . Flight data	. Digitize and decode sensor data . Correlate radar and beacon data . Compute target positions and format for output . Track targets and correlate with flight data . Prepare interrogation schedules . Accept and transmit data link messages from a/c, ARTS and IPC . Transmit target data to ARTS	<u>To ARTS</u> . Beacon (DABS, ATCRBS) only and Radar-Beacon target reports: Range to 1/64 n. mi. Azimuth to .022° Beacon code (DABS or ATCRBS) Altitude SPI, X indications Code confidence bits Radar-augmentation indicator Data link messages . Radar-only target reports: range, azimuth . Weather map . Alarms <u>To IPC</u> . acknowledgments . target reports <u>To Sensor</u> . Interrogations of aircraft with data link messages . Timing

TABLE 17.2-4 HIPO CHART - TAGS

INPUT	PROCESS	OUTPUT
From Sensor from each receiver for each aircraft . reply time-of-arrival (TOA) . digitized beacon code . garble indicator From TIPS or ARTS or controller input . ACID/beacon code pairs . Arrival/Departure times . Weight classes . Surveillance data From Controller Keyboard Input . Configuration messages . Handoffs . Deletions From Supervisory Position . Startup, startover messages . Parameter changes	. Accept and process flight data maintain track file . Prepare interrogation schedule, including old tracks, new tracks, reinterrogations and area searches . Generate interrogation instructions, including cell coordinates, cell size, time slot, expected beacon code, configuration . Process sensor data-compute x, y position, check beacon code, indicate missed targets . Correlate returns with Flight Data - smooth and predict track position . Prepare and format display outputs . Process controller keyboard messages . Process supervisory messages	To Sensor Interrogation instructions cell coordinates cell size time slot beacon code configuration (master/slave) To ARTS or TIPS . requests for flight data To Display Subsystem . aircraft data blocks with leaders . tabular lists

TABLE 17.2-5 HIPO CHART - TAGS DATA ACQUISITION SUBSYSTEM

INPUT	PROCESS	OUTPUT
From Sensor from each receiver for each aircraft . reply time-of-arrival (TOA) . digitized beacon code . garble indicator From Processor Subsystem . Predicted position of each aircraft to be interrogated . Geographic configuration changes . track deletions . supervisory control messages	. Accept and process aircraft predicted position data . Accept and process geographic configuration changes . Prepare interrogation schedules and instruction messages . Compute x,y positions from TOA messages, correlate with predicted response and initiate reinterrogation if required . Initiate new tracks for auto acquisition targets . Prepare and transmit position reports to processor subsystem	To Processor Subsystem for each beacon-equipped aircraft: . x,y position to 1/64 n. mi. . beacon code . quality, status indicators (new, old, lost) To Sensor . Interrogation instructions cell coordinates cell size time slot beacon code configuration (master/slave)

TABLE 17.2-6. HIPO CHART - TAGS PROCESSOR SUBSYSTEM

INPUT	PROCESS	OUTPUT
<u>From Data Acquisition Subsystem</u> for each beacon-equipped aircraft: . x,y position to 1/64 n. mi. . beacon code . quality, status indicators (new, old, lost) <u>From ARTS, TIPS or</u> . ACID/beacon code pairs . Arrival/Departure times . Weight classes <u>From controller keyboard input</u> . Configuration messages . Handoffs . Deletions <u>From ARTS</u> . Surveillance data x,y to 1/64 n.mi. $\dot{x}$,$\dot{y}$ <u>From Supervisory Position</u> . Startup, startover messages . Parameter changes	. Accept and process Flight Data- maintain track file . Correlate target position data from data acquisition subsystem with predicted position and Flight Data . Smooth and predict positions for next interrogation . Prepare and format display outputs . Process controller keyboard messages . Process supervisory messages	<u>To Data Acquisition Subsystem</u> . Predicted position of each aircraft to be interrogated (x,y, time, beacon code) . Geographic configuration changes . Track deletions . supervisory control messages <u>To Display Subsystems</u> . aircraft data blocks with leaders . Tabular data

TABLE 17.2-7 HIPO CHART - RDBM

INPUT	PROCESS	OUTPUT
From ARTS or other . changes to displays From Keyboard . K/B characters	. Process display changes . Interpret K/B characters, assemble message	To display . display commands To ARTS . K/B messages

TABLE 17.2-8. HIPO CHART - TIPS

INPUT	PROCESS	OUTPUT
From Tower Controller Keyboard Input . Display format and data manipulation instructions . Data requests . Runway assignments . Flight/Airport status, weather information . Handoffs . IFR/VFR clearance and amendment requests . IFR/VFR flight plan cancellations From ARTS . Beacon codes available for VFR departures . Controller inputs as above From ARTCC . IFR Flight Plans . IFR flight plan amendments and cancellations From Supervisory Positions . Startup, startover messages . configuration, parameter changes	. Accept, store and maintain flight data, ATC status and weather information . Prepare and maintain display outputs for each position . Process controller inputs . Make runway assignments for individual flights and accept reassignments from controller positions . Maintain list of available beacon codes . Process communications among TIPS, ARTS, and ARTCC . Process supervisory messages	To Tower Displays . Flight data . Airport status/ weather information . IFR flight clearances with beacon code assignments . Handoffs To ARTS . Flight data . Display data as above . Handoffs To ARTCC . Terminal weather information . IFR flight plan submission and amendment requests . IFR flight plans cancellations

TABLE 17.2-9 HIPO CHART - TIPS TFDP

INPUT	PROCESS	OUTPUT
From TIPS TDS . Requests for flight data . Runway assignments . Flight/Airport status, weather information . Handoffs . IFR/VFR clearance and cancellations . Supervisory messages From ARTS . Beacon codes available for VFR departures . Controller inputs requesting flight data and display changes . Handoffs From ARTCC . IFR Flight Plans . IFR Flight Plan amendments and cancellations From Supervisory Position . Startup, startover messages	. Accept, store and maintain flight data, ATC status and weather information . Process data requests from ARTS and TIPS TDS . Make runway assignments for individual flights and accept reassignments from ARTS and TIPS TDS . Maintain list of available beacon codes . Process communications among TIPS, ARTS and ARTCC . Process supervisory messages	To TIP TDS . Flight data . Responses to requests . IFR flight clearances . VFR flight clearances with beacon code assignments . Handoffs To ARTS . Flight data . Display data . Handoffs To ARTCC: . Terminal area weather information . IFR flight plan submission and amendment requests . IFR flight plan cancellations

TABLE 17.2-10 HIPO CHART - TIPS TDS

INPUT	PROCESS	OUTPUT
From Tower Controller Keyboard Input . Display format and data manipulation instructions . Data requests . Runway assignments . Flight/Airport status, weather information . Handoffs . IFR/VFR flight plan cancellations From TIPS TFDP . Flight data for display . Responses to requests . IFR flight clearances . VFR flight clearances with beacon code assignments . Handoffs From Supervisory Position . Startup, startover messages . Configuration, parameter changes	. Prepare displays for each controller position . Process controller inputs . Process supervisory messages	. Tabular lists of flight data specific to each controller position . Airport status/ weather information . IFR flight clearances . VFR flight clearances with beacon code assignments . Handoffs To TIPS TFDP . Requests for flight data . Runway assignments . Flight/Airport status, weather information . IFR/VFR flight plan cancellations . Supervisory messages

TABLE 17.2-11 HIPO CHART - ARTS IIIA

INPUT	PROCESS	OUTPUT
From Sensor: . Beacon & Radar-beacon target reports: Range, azimuth Beacon code Altitude Code confidence bits SPI, X-bit Radar-augmentation indicator . Radar-only target reports: Range, azimuth . Weather map . Alarms From Controller keyboard input . Requests for display changes . Requests for flight data From TIPS . Flight data . Display data . Handoffs	. Accept and process flight data . Accept and process surveillance data . Correlate flight and surveillance data . Track beacon and radar targets . Prepare display tables . Process keyboard messages . Metering and Spacing . Conflict Alert . MSAW	To TRACON and Tower . Data blocks . Tabular data To TIPS: . Beacon codes available for VFR departures . Controller requests for flight data and display changes . Handoffs To TAGS . Surveillance data To DABS . ATC commands and data . Flight data

TABLE 17.2-12 HIPO CHART - VAS/WVAS/WIND SHEAR

INPUT	PROCESS	OUTPUT
From Sensor: for each runway Wind speed and direction	VAS . Compute separation requirements	To Display: Separation requirements Meterological parameters system status
From Sensor: for each runway Measurements of wind speed and direction	WVAS . Predict severity of wake vortex	To Display: . Wake vortex predictions
From Sensor for airport surface Measurements of wind field strength	WIND SHEAR . Predict existence and strength of wind shear	To Display: . Wind Shear predictions

TABLE 17.2-13 HIPO CHART - METEOROLOGICAL

OUTPUT	PROCESS	OUTPUT
From Sensors: . Various meteorological measurements e.g. temperature, ceiling, visibility, atmospheric pressure	. Digitize observations . Interpret and store data . Prepare display material and drive displays	To Displays: . Indications of meteorological conditions. (Text, tabular, graphical)

17.2.1.2 Class B Equipment - A tower with Class B equipment will have all of the major and minor systems except TAGS, as depicted in the block diagram, Figure 17.2-3. Once again these are towers with both collocated and remote TRACON's, for instance, Boston and San Francisco, respectively.

17.2.1.3 Class C Equipment - The block diagram in Figure 17.2.4 shows the configuration of a tower with Class C equipment, such as Phoenix, which has a collocated TRACON. The remote tower cab has already been shown as part of Figures 17.2-1 and 17.2-3; an example of this type of cab is Hanscom Field at Bedford, MA. These cabs will have both the ARTS display and a TIPS system.

17.2.1.4 Interfaces between the Systems - The systems installed in a Class A tower, as shown in Figure 17.2-1, have many points of contact and have many seemingly common functions. The TIPS, in particular, interfaces with NAS, ARTS, TAG and the tower controllers, and has a special importance because of its central position. Other interfaces of importance are between ARTS and NAS and between ARTS and TAGS. The apparently common functions of data display and keyboard input processing are discussed below in terms of the data processing implications and elsewhere in terms of human factors (Section 13) and operational implications (Section 14).

The types of data which flow across the interfaces between systems are shown in Table 17.2-14. The notations in the table are not particularly specific; more detail can be obtained from the preceding HIPO charts. The interfaces between the Wake Vortex/ Wind Shear systems, as well as the meterological systems, and the other four systems are treated with considerable freedom because of the lack of definition in that area.

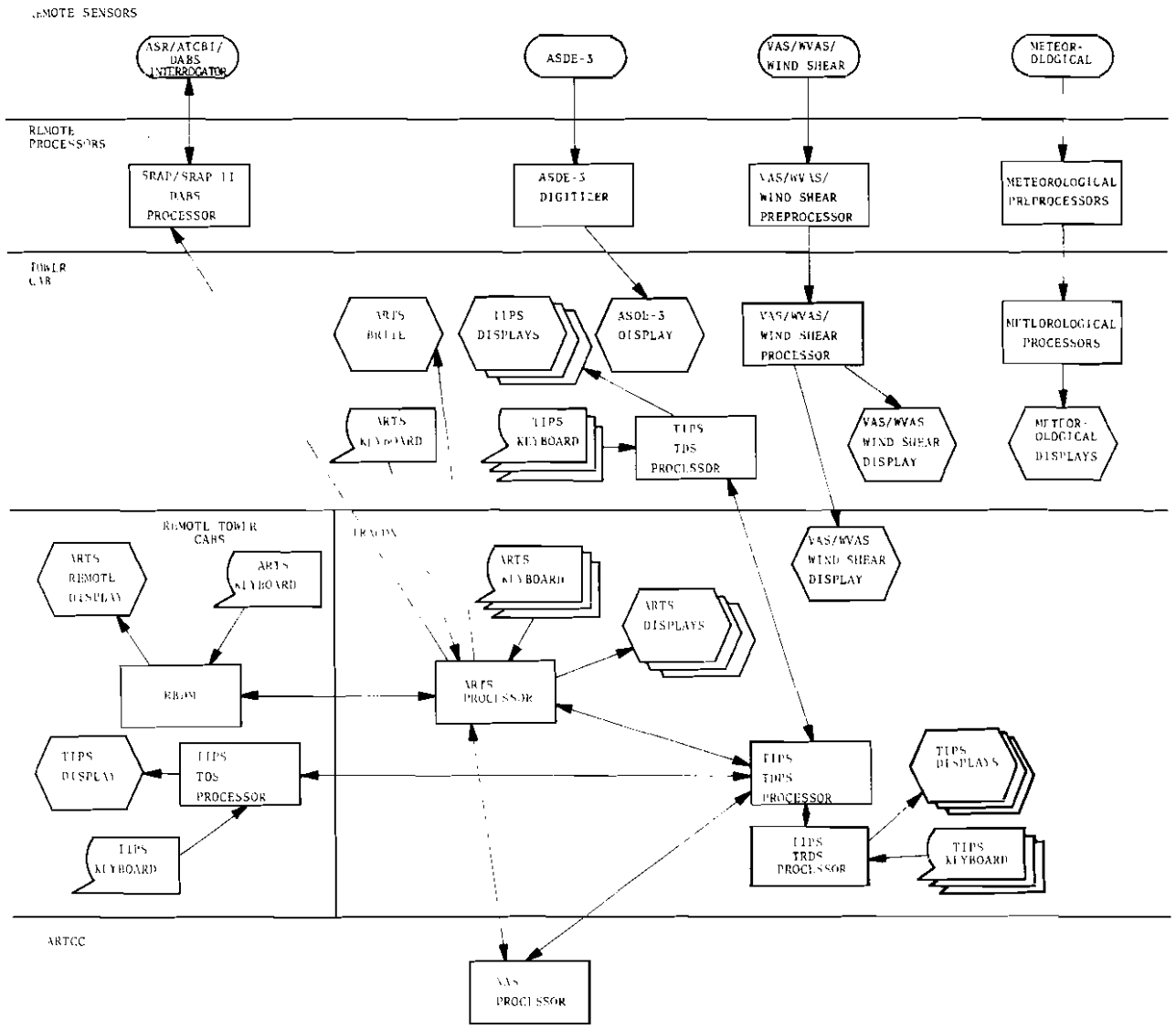

FIGURE 17.2-3. BLOCK DIAGRAM OF CLASS B EQUIPMENT

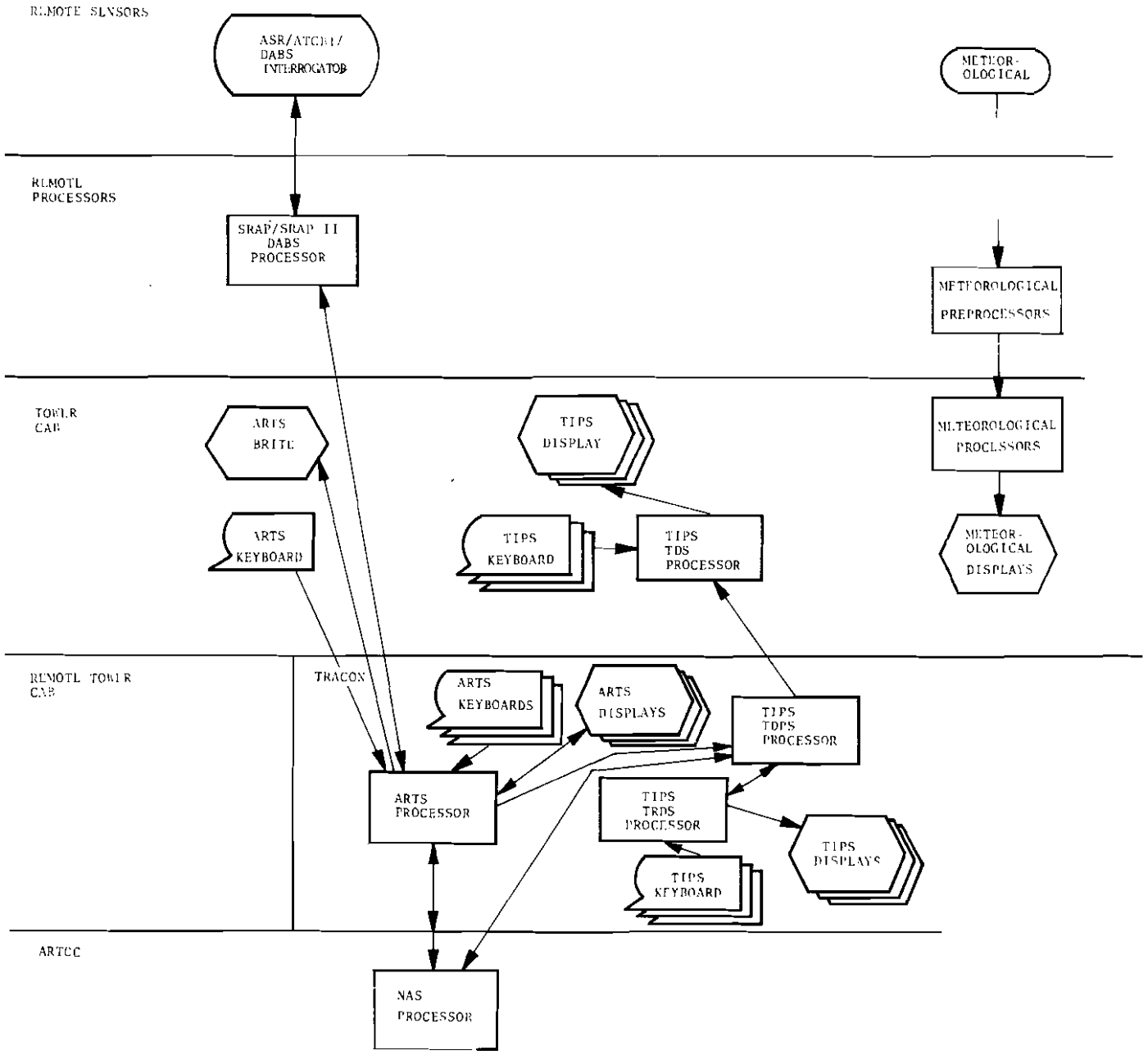

FIGURE 17.2-4. BLOCK DIAGRAM OF CLASS C EQUIPMENT

TABLE 17.2-14 DATA TYPES AT THE SYSTEM INTERFACES

From/To	NAS	ARTS	TIPS	TAGS	VAS, etc.	Meteorological
NAS	-	handoff crosstell	pre.f.p. f.p.ch.	0	0	0
ARTS	f.p.ch. handoff crosstell	-	f.p.ch.	handoff crosstell	0	0
TIPS	add.f.p. f.p.ch.	pre.f.p. f.p.ch. add.f.p.	-	pre.f.p. add.f.p. f.p.ch.	0	0
TAGS	0	handoff crosstell dep.inf.	dep. inf.	-	0	0
VAS, etc.	wv/ws inf.	wv/ws inf.	wv/ws inf.	wv/ws inf.	-	0
Meteorological	weather	weather	weather	weather	0	-

Key:
pre.f.p. - prestored flight plans
f.p.ch. - flight plan changes
0-no data flow
add.f.p. - additional flight plans
dep. inf. - departure information
handoff - handoff of control between systems
crosstell - crosstell surveillance information
weather - meteorological information
wv/ws inf. - wake vortex/wind shear information

17.2.2 Functional Development

The key MSDP system, as far as the tower cab is concerned is TIPS, which was developed to replace the FDEP/flight strip equipment in cab and TRACON. In the course of system design, the decision was made to make TIPS the repository for the terminal flight data database and to put the larger part of the TIPS data processing capability in the TRACON. This led easily to the notion that TIPS should communicate with the NAS computer at ARTCC to obtain flight data, and further that the ARTS-TIPS-NAS path should subsume the functions of the ARTS-NAS link. Thus, TIPS becomes both the flight data manager and the communications manager for messages among the tower, TRACON and ARTCC.

These two delegations of function are presumed in the development to follow since they seem to be solidly backed by the analysis done by MITRE. That being the case, the functional development of a tower with Class A Equipment is as follows.

17.2.2.1 Tower with Class A Equipment - Besides TIPS, the systems to be considered here are TAGS, the WVAS/wind shear group and the Meterological group. The ARTS III display in the cab is assumed to be the Tower Cab Digital Display (TCDD) driven by an ARTS IIIA installation whose sensor data is processed by a Sensor Receiver and Processor (SRAP). Figure 17.2-5 is a block diagram of such an installation with a collocated tower and TRACON and Figure 17.2-6 is for an installation whose TRACON is remote from the tower.

Surveillance Data

There are three processors which take part in the surveillance process, each using its own sensor. For arrivals, the ARTCC track each aircraft to the handoff point using radar and beacon data from its ARSR/ATCBI installation. The NAS computer then sends the computed aircraft position and velocity to ARTS computer once every six seconds, approximately, during the handoff procedure. The ARTS tracker uses this data to help initiate tracking and continues to track during approach using data from the SRAP. At a

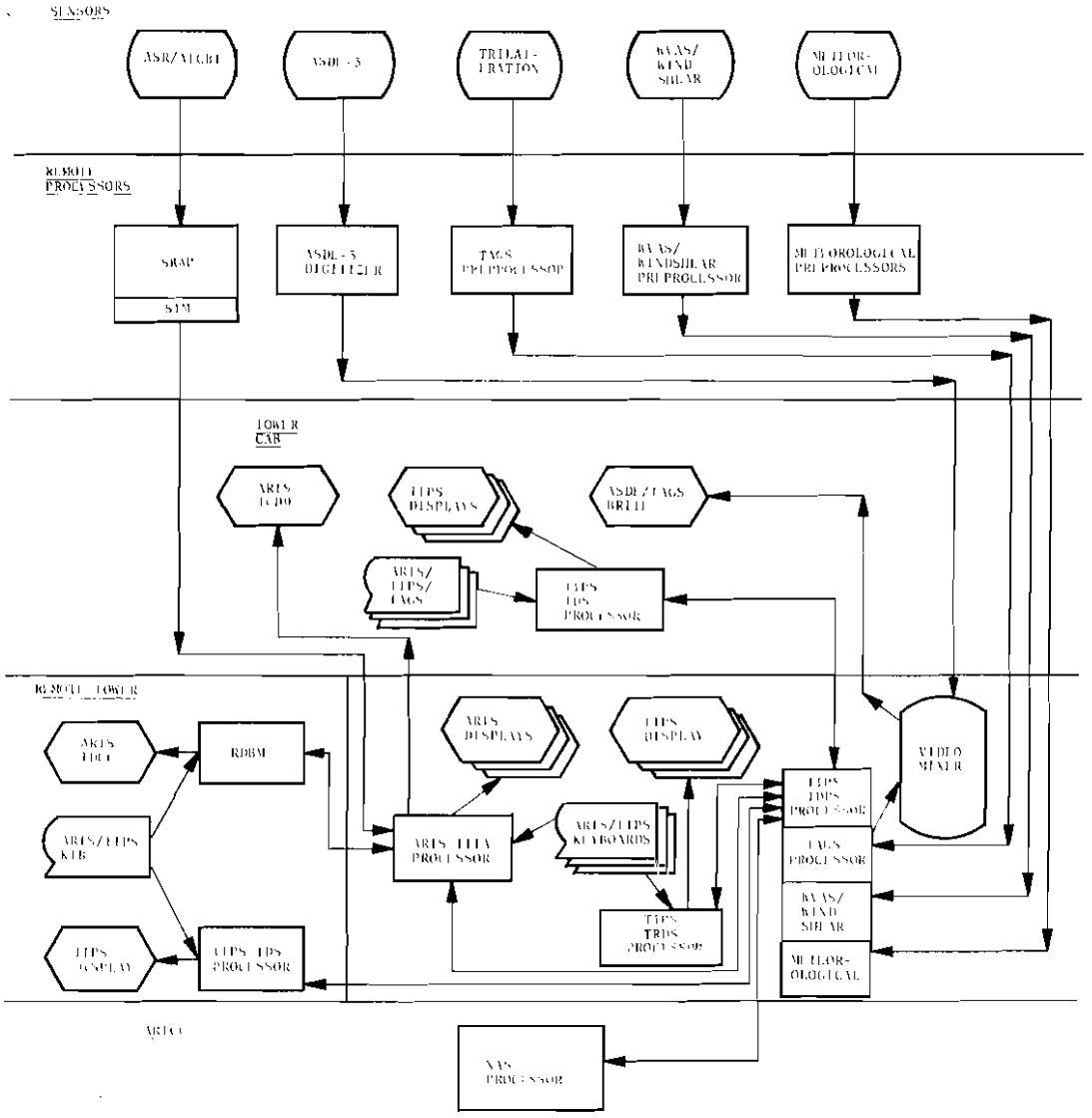

FIGURE 17.2-5. INTEGRATED CLASS A CAB - COLLOCATED TRACON

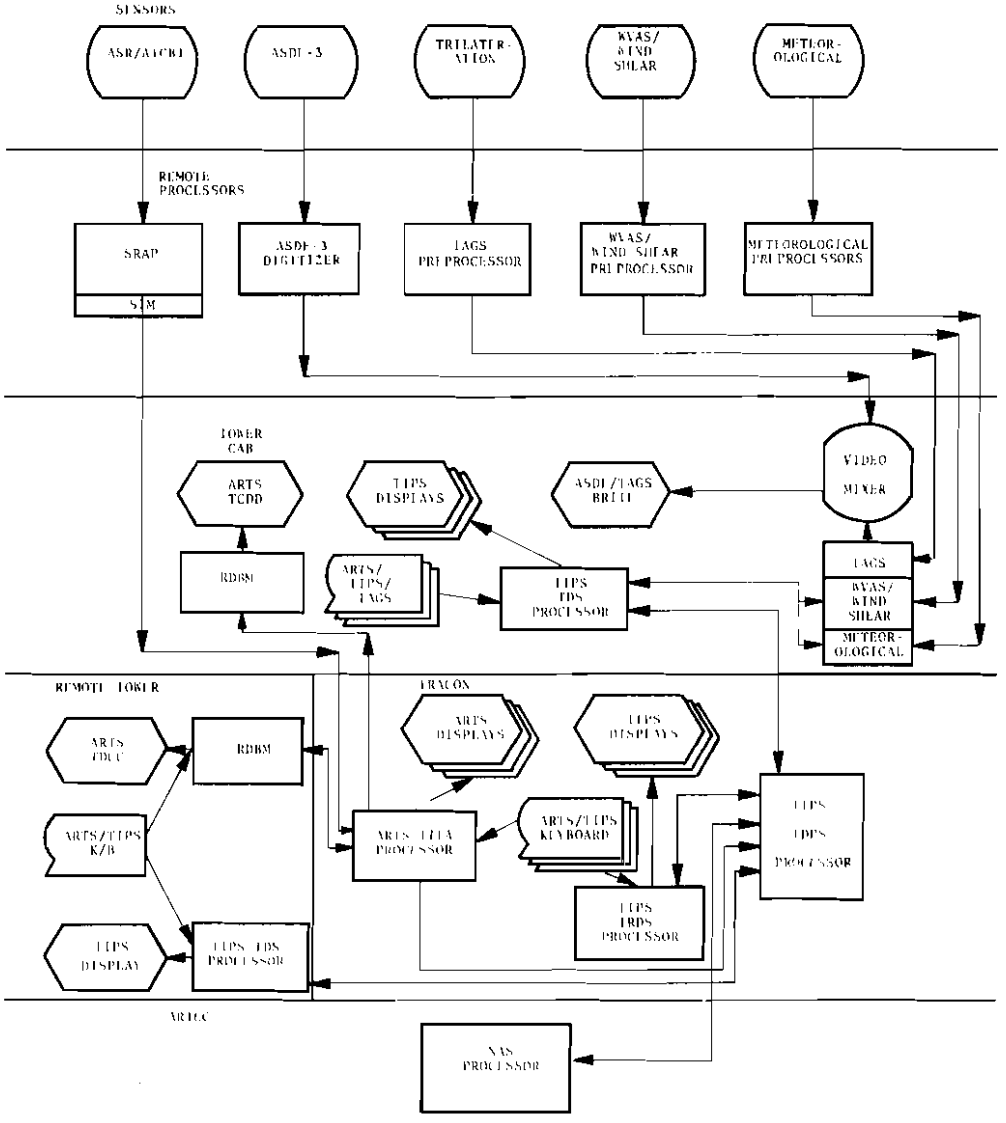

FIGURE 17.2-6 INTEGRATED CLASS A CAB - REMOTE TRACON

point near the airport, control of the aircraft is passed to the tower cab and ARTS drops the track. At some point, the TAGS processor will initiate tracking using data derived from the tri-lateration system.

Note that there is a gap in the coverage between the ARTS track drop and TAGS track initiate. The extent of the gap will depend on how far ARTS can track arrivals, which depends on the physical relation between the sensor location and the runway threshold, and the point at which the tri-lateration system can acquire the aircraft, which depends on airport geometry. The ideal situation would allow a cross-telling of track data between ARTS and TAGS, similar to that between NAS and ARTS.

Departing aircraft are acquired by ARTS as they pass over exit fixes established by their flight plans. Once again, there will be a period when the aircraft is not tracked, since TAGS will have dropped track as it passed the limits of the airport and ARTS will not yet have acquired track.

The transition between ARTS and NAS coverage is made smooth by the passing of track position and velocity from ARTS to NAS during the handoff process.

Flight Data

As has been described above, prestored flight data is passed from the center to the TRACON at some preset interval before expected arrival or departure of the flight in question. The TIPS TDPF will maintain and manage a file of this data which is available to each of the other terminal area processors: TIPS TDS and TRDS, ARTS and TAGS. Access to this data file, for retrieval, amendment, addition or deletion, will be through the TIPS data management function, which will accept and process keyboard or computer-generated messages requesting such actions. The data manager will also generate messages transmitting flight data to other processors according to preset criteria, such as a certain interval before departure.

It should be pointed out that the addition of TIPS to the existing ARTS system has resulted in some degree of redundancy in the flight data handling. This is because the ARTS has a certain amount of flight data processing capability itself, in the form of display of flight plans, amending flight plans, etc. These functions would presumably be largely subsumed by TIPS yet would remain available through ARTS.

As a concrete example, consider the case of a flight plan amendment. The controller will have two ways to effect a change in stored flight plan: through the ARTS keyboard via a 'multi-function, modify' message and through the TIPS keyboard via an 'amend flight plan' action. If both capabilities remain in the integrated system, then careful attention will have to have been paid to the flow of information through the system so that 1) the result will appear to controller to be identical no matter which of the actions he took and 2) the flight plans in each processor in the system will have the same information as all of the others.

The TIPS concept as described in early versions of the requirements document was obviously developed with many of these ideas in mind, but a specific discussion of all cases is called for.

Meteorological, Atmospheric and Other Data

The Wake Vortex, Wind Shear and Meteorological systems which will be part of the integrated tower cab are alike in many ways. Each gathers data from a sensor on or near the airport, preprocesses the data to some extent, transmits the result to a processor in or near the tower and displays the processed result in the tower cab and possibly the TRACON. The suggestion has been made in this report that the output of those systems be presented to the controllers on the TIPS displays. If this suggestion were to be implemented, then the data from these systems would have to be interpreted somewhere and converted to the proper display format in the TIPS system. A close coordination, or even integration, with the TIPS TDPF would make this feasible.

Control and Supervisory Data

In any complex of dispersed, cooperating processors, it is necessary that the states of the system components be determinable so that failures may be detected and incorrect system operation be guarded against. A great deal of attention must continue to be paid to the startup and startover procedures and failure recovery in general, to synchronism of data manipulation and other processes and to the assurance that data to be modified is correctly identified.

In the system under discussion, the correlation between the surveillance data and the flight data is a primary goal, where the former comes, as was pointed out, through multiple sensors to multiple processors and contributions to the latter come from multiple sources. The system as a whole must be set up to preserve the identity of the data and the synchronism of the processes.

Data Link Data

If a data link is made part of the system, then a message generation system must be devised, along with a protocol and set of procedures, that 1) fits with the current interfacility message exchange procedure; 2) allows for the automatic generation of messages where called for (e.g., Metering and Spacing or MSAW), 3) allows for controller entry of messages where called for in both tower and TRACON, and 4) allows message data generated in the aircraft (e.g. from MLS equipment) to be directed to the proper recipient.

The communication among the processors without data link is an area requiring careful study, with data link, it may become critical.

The Class A tower cab which is remote from the TRACON presents a slightly modified picture, as diagrammed in Figure 17.2-6. The novel aspect is that while the wake vortex, windshear and other meterological data are gathered at the airport, at least

some of this data will be required at the TRACON, some distance away. The processing equipment for the tower systems, TAGS and ASDE-3, as well as for the three systems just mentioned will have to be housed in a room near the cab as shown in the figure.

The major consideration now is how to get the data to the TRACON and to the TIPS. One possibility is a link to the TIPS TDS processor and special software in it to interpret the data and transmit it to the TDPF.

17.2.2.2 Tower with Class B Equipment - Since the difference between Classes A and B lies in the presence of TAGS in A but not in B, much of the preceding discussion is valid here. The matter of handoff between ARTS and TAGS obviously does not apply, but the rest is unchanged. A diagram of a Class B tower is given as Figure 17.2-7.

17.2.2.3 Tower with Class C Equipment - A tower with Class C equipment has the same data processing requirements as the Class B tower, since the difference between them is the ASDE-3 equipment in the B tower but not in C, and what processing ASDE-3 has is essentially external to the tower.

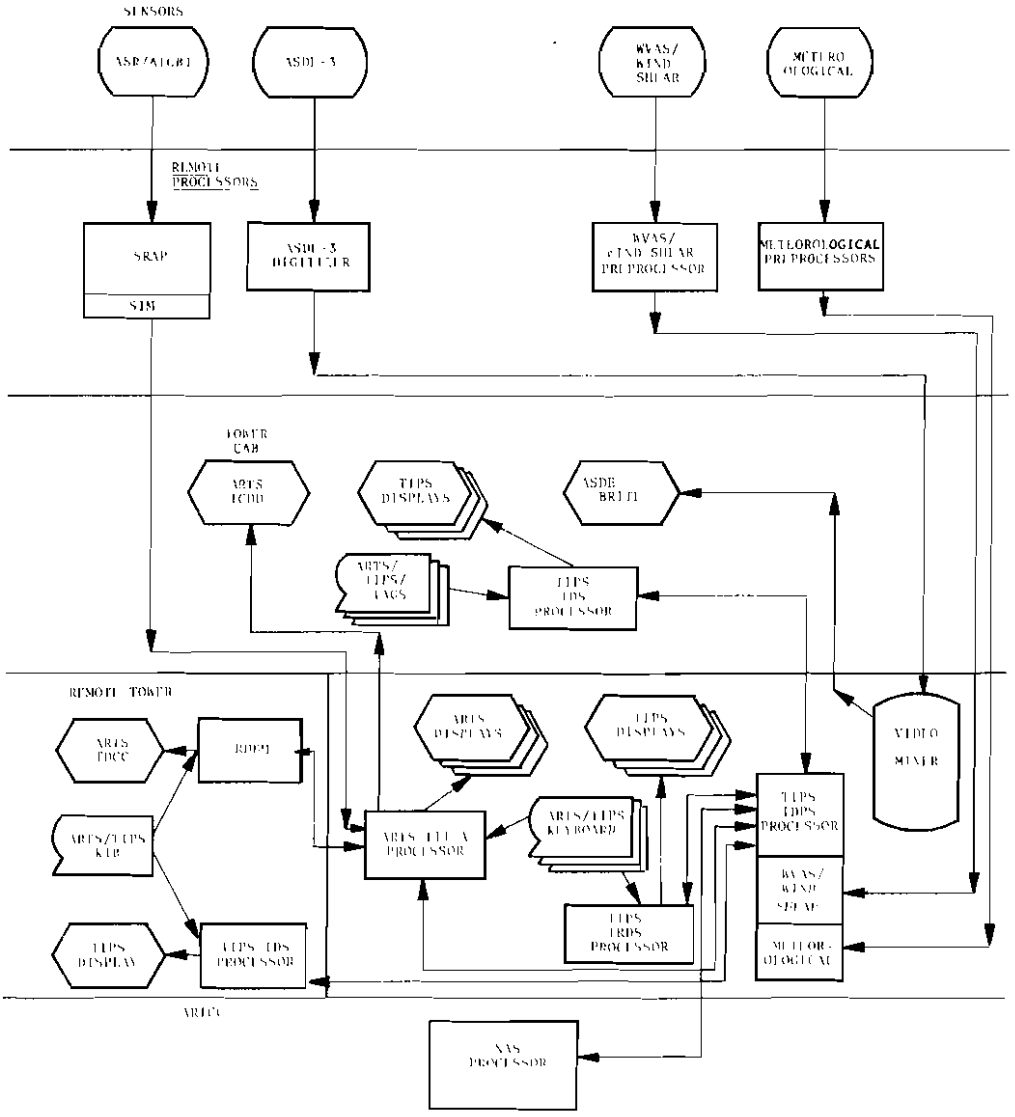

FIGURE 17.2-7 INTEGRATED CLASS B CAB - COLLOCATED TRACON

17.3 OVERALL ANALYSIS AND RECOMMENDATIONS

Certain assumptions are implicit in the preceding discussion which should be made explicit now. 1) It is assumed that the ARTS IIIA procurement goes as planned and further that certain equipment now in the prototype stage-namely, the Remote Display Buffer Memory (RDBM) and the Tower Cab Digital Display (TCDD) - will be developed and procured in quantity. 2) The ASDE-3 will be developed and procured, and the TAGS which is developed and procured will be the hybrid system described earlier. 3) The TIPS will be developed and procured substantially as described earlier (Section 8) and will act as a flight data manager and communications center for the system. 4) It is desirable to distribute the outputs of the wake vortex, wind shear and meteorological measurement systems to the controllers and ATC functions through some combination of TIPS, TAGS, ASDE-3 and ARTS.

The Tower/TRACON system developed under these assumptions looks like the one diagrammed in Figure 17.2-5 (or 17.2-6 if the tower and TRACON are not collocated). The relationship of the TIPS TDPS, the TAGS, the WVAS/Wind Shear and the Meteorological processors was purposely left vague in the diagram; it will be one of the principal topics discussed in the following paragraphs.

17.3.1 Analysis and Trade-off Studies

The data processing complex of the Tower/TRACON system must meet a number of requirements over and above the functional ones, of doing the right tasks in a correct manner, and the performance ones, of capacity and response time. The requirements for high reliability and low cost, initial and maintenance, also apply, as well as some more specific ones which tend to contribute to lowered cost or increased reliability. For instance, both the hardware and software should be common to the greatest possible extent among towers of varying size and complexity.

The Class A Tower Cab and TRACON will have at least six new processing capabilities: three already identified with separate computers - the TIPS Tower and TRACON Display Subsystem processors and Terminal Data Processing Subsystem processor - and three new ones - the TAGS, WVAS/Wind Shear and Meteorological processors. It is suggested here that these last three be integrated in some way with the TIPS TDPS processors. A number of approaches to this integration are discussed below. Since the real natures of these functions have not yet been defined, no quantitative analysis is possible; the suggestions made here are in the nature of strawman proposals and only indicate the kinds of factors to be considered when implementation is initiated.

Integration of these functions will in itself convey certain advantages and disadvantages, as has been discussed in previous sections. On the plus side are the simplification of hardware maintenance and logistics as a result of having to deal with only a single type of computer, and of software development and maintenance as a result of having only one language and operating system. On the negative side are the problems introduced into the system development process as a result of having the hardware and supervisory software specified in advance of the development of system requirements. These problems can be alleviated somewhat by ensuring that any integrated system is flexible in implementation and adaptable to a wide range of operating loads and conditions.

An additional negative aspect of integration is the vulnerability of the complex to component failure; the possibility of a complete system failure when one part fails must be minimized. Needless to say, this is only one manifestation of a large and continuing problem of reliability.

A major benefit of such integration is that the results of wake vortex, wind shear and meteorological observations and calculations would be directly accessible by TIPS (and TAGS) and hence by ARTS, NAS and the tower and TRACON controllers. This will allow 1) wake vortex and wind shear information to be passed to the Metering and Spacing function in a timely fashion, 2) wake vortex,

wind shear and meteorological information to be displayed on the TIPS displays, and 3) graphic representations of these data to be generated and displayed on the ASDE/TAGS display.

By far the simplest approach to the implementation of these capabilities would be to procure a single computer to carry out all of the functions. It would be sized to accomplish not only the TIPS data management and communications functions but also the TAGS surveillance and display functions and the functions associated with the WVAS/Wind Shear and Meteorological systems. There are a number of small computers which could do these tasks, many of which are available with real-time operating systems developed for this type of environment.

The principal advantage of this approach is the relative ease with which the software can be developed. The vendor-supplied operating systems generally support a number of high-order languages with optimizing compilers, and they provide efficient run-time services for data management and process synchronization. Thus, program development need not be concerned with any of these matters and can concentrate on the creation of the application software. When the system is ready to be evaluated, the operating system can be tuned to give performance tailored to the demands of real-time operations at the particular site where it is installed.

The tower configurations other than Class A will require modifications to this basic implementation. If the tower is remote from the TRACON, two processors will be required, as shown in Figure 17.2-6. One processor will be the familiar TIPS TDPS processor, while the other would be a new one located in the tower. Ideally, they would be identical computers running under the same real-time executive; less ideally but still advantageous, they would be members of the same family of computers running under the same, or closely related, executives. In either case, the application programs written for the colocated TRACON case can be carried over to the remote case with almost no change. Additional coding will have to be generated, however, to transfer the wake vortex, wind shear and meteorological information from the tower

processor to the TIPS TDPS processor.

The Class B and C cabs are similar to the Class A with the exception of the TAGS processing; the same processors and programming should be applicable to Classes B and C as well as A. Of course, with fewer functions to perform, the Classes B and C systems would have less stringent requirements and would need less memory and possibly a less capable processor of the selected computer family.

Note that if vortex, shear and meteorological information are shown on the TAGS display in the Class A tower, then it can be shown on the ASDE-3 BRITE display in the Class B tower with a small amount of extra effort: adapting the display generation routines to work without the rest of TAGS and supplying the extra alpha-numeric display, scan-converter and video mixer to work with the ASDE-3 equipment.

The major disadvantage of the single processor approach is reliability. Judicious use of redundant components and data paths can improve the overall reliability of the computer system as a whole, but there will remain some failures which could shut down the processor and thus disable TIPS, TAGS and the vortex, shear and meteorological systems. High-reliability components that are easy to replace when necessary may be the only solution.

A different approach might be to assemble a group of micro-and mini-processors together in a configuration like Figure 17.3-1. In this configuration, the minicomputers at the top of the figure handle the TIPS and TAGS functions, and provide reduced capability backup for each other. They are connected to a common bus which allows them to share I/O devices, such as communications to the other TIPS computers and the TAGS display, and two memories: a data-memory and a two-port memory shared with the other part of the configuration. This lower portion of the figure is composed of the set of microprocessors for the vortex, shear and meteorological systems. Each processes data from its data acquisition subsystem using its own memory and puts the results in the common dual-port memory through the lower bus. Note that the duty cycle

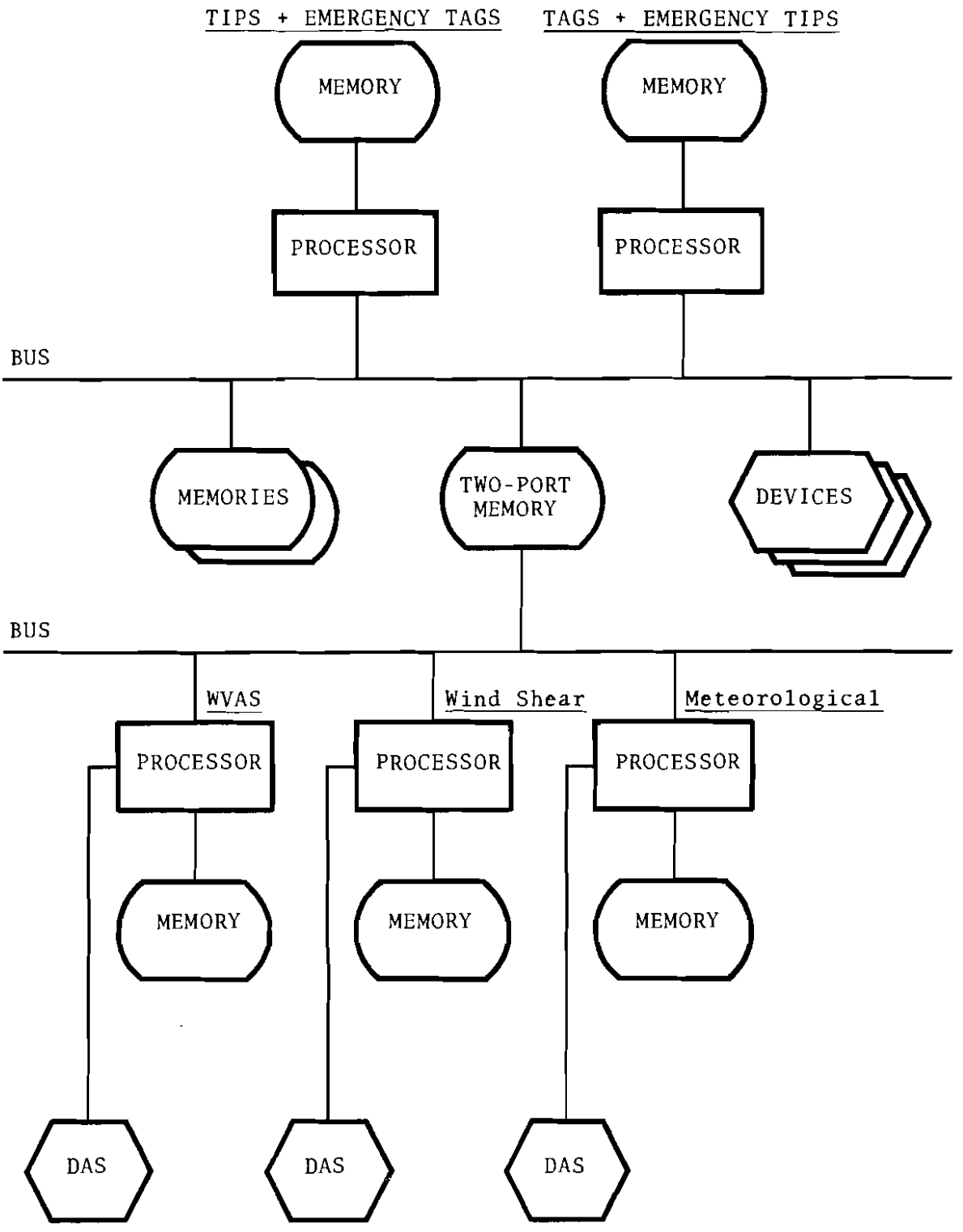

FIGURE 17.3-1. MINI/MICROPROCESSOR CONFIGURATION

and/or the amount of output data for each of these systems is relatively low, so the combined demand on the common memory is unlikely to be a critical design factor.

This configuration is quite flexible in that the number of microprocessors in the data acquisition row is arbitary, depending only on the systems installed at the airport in question. Furthermore, the size, configuration and programming of the mini- or microprocessors of the top row is independent of the lower except to the extent of the data passed through the dual-port memory.

As shown in the figure, this is a highly reliable configuration, in the sense that a failure in one part of the system would not disable the whole thing. The two-port memory is a weak link which could be made redundant if it were considered worth the cost. Emergency backup for the vortex, shear,and meteorological systems could instead be provided by a local readout of the appropriate data at the processor itself, presumably in an equipment room near the tower cab. This data could then be entered into the system through the ARTS or TIPS keyboard.

In order that this type of processor implementation be feasible, it is necessary that the subsystems involved-TIPS, TAGS, vortex, etc - be required to use compatible equipment. The TIPS and TAGS processors should be of the same type and the lower level microprocessors should all be identical. This may be hard to bring about but is necessary for the integration to work.

17.3.2 Conclusions and Recommendations

The principal recommendation of this section is obviously that the data processing functions of TIPS, TAGS, wake vortex, wind shear,and meteorological systems be integrated in one way or another. Two approaches were outlined.

An additional recommendation, almost implicit in that integration, is that TIPS be the communications central for the Tower/ TRACON systems. To do that, the communications links from the ARTCC, TIPS and ARTS should be led through a patch panel (similar

to the one proposed for the prototype TIPS system) so that in the event of a problem with the TIPS TDPS processor, the original NAS-ARTS link can be recreated. For this purpose, the NAS and ARTS software handling this communications path should, if it is different from the software communicating with TIPS, be stored on disc at NAS and ARTS ready to be loaded and run in the emergency situation.

Very few real problems involving data processing, per se, were uncovered during the study reported here. Of course, it is always necessary to keep in mind during system design the interfaces to be developed with other systems, both current and future, and to consider carefully the possible interactions. Since the UG3RD systems have tended to evolve over a period of time, it has been possible to build to a great extent on existing work. In the data processing area, this has so far seemed to work reasonably well.

For example, the communications between the NAS and ARTS computers has evolved to a point where a relatively large number of messages are transferred by a number of functional programs and controller actions in a routine way. When TIPS was specified, the NAS/ARTS techniques were extended in a natural way to good effect. Clearly, this procedure must be continued if new kinds of information are specified for interchange among the newer and older systems.

A case in point is the matter of handoff between the TRACON and Tower. If this process involves cross-tell of surveillance data between ARTS and TAGS, the mechanism used should reflect that already developed for NAS and ARTS. If the handoff involves the TIPS, then, again, the NAS-ARTS experience should be reflected.

One other area which may require coordination among ARTS, TIPS and TAGS is the assignment of runways. In the ordinary situation, there does not seem to be any problem, but when parallel runways are in use for mixed arrivals and departures, there may be a conflict among the three system outputs which will require

controllers to take over the function at a time when it is most preferable to have an automated solution.

18. SUMMARY OF FINDINGS, CONCLUSIONS, AND RECOMMENDATIONS

18.1 INTRODUCTION

The analysis of the integration of the MSDP systems into the tower cab environment described in this series of reports is preliminary in nature. Because of the limited time that was available for the study, it was necessary to carry out various portions of the study in parallel with little opportunity for cross reference. As a result, many of the conclusions and recommendations are presented in the text together with unresolved counterarguments. This section consolidates those differing points of view.

For the purposes of this summary, the material has been grouped into six categories:

a. The physical integration of the equipment in the tower cab and on the airport surface,

b. The effect of the introduction of the new systems on the operations in the tower cab,

c. Human factors aspects of the integration,

d. The functional integration of the new systems,

e. Interfaces between the new systems and between the new and existing systems, and

f. Failure modes in the tower cab after the new systems have been introduced.

The depths of the analyses of the various MSDP systems varied widely depending principally on the degree to which the system in question has been developed.

18.2 PHYSICAL INTEGRATION IN THE CAB AND AIRPORT

18.2.1 Tower Cab Studies

The tower cabs of a representative sample of airports, six in number, were studied to determine physical (and operational)

ramifications of the integration of the MSDP systems. In each case, a configuration was proposed which included the MSDP systems appropriate to it. The systems considered were those which make use of large displays and are fairly well defined; namely, TAGS, ASDE-3, TIPS, remoted ARTS III and ARTS II.

Although no broadly applicable findings can be established through these efforts, both because of the unique nature of each tower cab and airport and because of the preliminary and unverified nature of the investigation, still the feasibility of installing the new systems as designed, with minimum integration of equipment has been shown for these six cases.

It is important to note, moreover, that these analyses have not been reviewed by the respective airports and until so verified and corrected, they should be considered quite preliminary.

Because airports and tower cabs differ among themselves so radically, the study should be extended to many more airports.

The following common principles were developed for fitting the MSDP systems equipment into the six representative tower-cab layouts presented in this report.

a. Wherever possible the TIPS displays were mounted on pedestals on the floor in front of the console, swiveling in cut-outs in the counter. This arrangement has advantages of flexibility and ease of use over the console-mounted positions.

The floor mount was possible at most LC and GC positions (except in Boston where space did not permit).

At most FD or CD positions, the TIPS displays replaced console- or counter-mounted FDEP or flight-strip equipment.

b. The TAGS display, where present, was put in place of the existing ASDE-2 display. In general, ASDE-3 displays were yoke-mounted from the ceiling.

Where an ASDE-3/TAGS display was shared by controller, it was between a GC and an LC, rather than two GC's. There are too many potential targets of interest to two GC's to fit well on a single display.

c. Display controls were mounted on the console, where possible, in spare space or in place of displaced equipment.

d. Keyboards were placed on counters and integrated with others wherever possible.

Some of the drawbacks of these layouts are:

The sharing of TAGS/ASDE-3 displays by two controllers prevents the use of the "quick-look" (TAGS) and "two-presentation select" (ASDE-3) features of the new equipment.

The floor-mounted TIPS display makes access to console-mounted controls somewhat awkward.

The keyboards and displays take up most of the available counter space.

The effect of these difficulties could be minimized by some additional or modified equipment.

The console-mounted controls could be moved to the keyboard or even made a part of the TIPS "quick-action entry" capability.

Keyboards for TAGS and TIPS could be integrated to save counter space.

Additional TAGS/ASDE-3 channels would allow better use of display features and would reduce interference between controllers.

18.2.2 Integration of Keyboards

The integration of the ARTS, TIPS and TAGS keyboards was the subject of a preliminary feasibility study.

The study concluded that it would be possible to attach relatively small supplementary keyboards onto the ARTS keyboard to produce combined ARTS/TIPS, ARTS/TAGS or ARTS/TIPS/TAGS units.

The concept is that the combined units are connected to both, or all three, system processors with switching of signals taking place in the add-on keyboard modules. Thus, in the ARTS mode, the TIPS and/or TAGS modules would be passive and simply pass the signals through to the ARTS processor. In the TIPS mode, the signals from the ARTS keyboard are added to those of the TIPS module and sent to the TIPS processor. A similar action takes

place in the TAGS module.

If all the MSDP systems are deployed as anticipated in this study, at least 79 controller positions will be supplied with multiple keyboards, 71 with ARTS and TIPS keyboards. Given the space limitations in the cabs, this may be enough to justify a keyboard integration effort.

18.2.3 Integration of Displays

Combining displays from two systems was suggested as another way to save space. This does not seem practicable for a number of reasons.

The ARTS BRITE display does not seem to be suitable for use by any other of the systems because it lacks certain characteristics or features described below.

The ASDE-3/TAGS display requires very high resolution, resulting in a very expensive unit which would not be suitable as the common, TIPS-alone display.

The TIPS display requires the "quick-action" data entry feature as an integral part of the display.

The information displayed by the TIPS and ASDE-3/TAGS is quite different in nature and would require an area almost equal to the sum of the individual areas (unless the area were time-shared, probably not a workable arrangement).

18.2.4 Idealized Controller Stations

The new systems, especially TIPS, will require a great deal of space, which must come from:

a) existing spare space

b) space created by removing excess or obsolete equipment, such as FDEP or flight-strip racks,

c) space created by combining or consolidating existing equipment in a more efficient arrangement, or

d) new tower cabs.

It would be desirable to have some rational way to minimize the demand for space on the part of the new systems and maximize the space made available from activities (b) and (c) above. An attempt was made to derive an idealized cab layout, or more precisely, a set of idealized controller stations, strictly from human engineering principles unconstrained by the actual physical sizes of specific projected equipment or the limitations of specific tower cabs.

The idealized configurations are based on a NAFEC controller station design developed earlier under another program.

While this station was a good basis on which to develop configurations derived from information needs, it is probably not practical for actual use because of its large size.

The basic arrangement developed for the LC station consists of an area pictorial display suspended above the controller's line of sight and an airport pictorial display in the console beside an alphanumeric display. Function-select keys are situated below the airport pictorial display and alphanumeric keyboard and PEM below the alphanumeric display.

The developed GC station is similar but without the area display, while the CD and FD have only the alphanumeric display and keyboard.

Communications and auxiliary equipment are provided at each station where needed.

18.2.5 Sensor Collocation

The possible collocation of TAGS and VAS sensors at Chicago and Los Angeles was studied to assess the cost and other advantages which might accrue.

It was concluded that because of some incompatible requirements, collocation was not always possible. Furthermore, when it was feasible, the resulting cost savings would probably be only on the order of 5 percent of the total system cost (or about 20 percent of the region's cost).

Other considerations, however, such as the reduction in the number of obstructions near the runways and efficiencies in site contracting work, may make collocation worth considering on a case-by-case basis.

18.3 THE EFFECT ON OPERATIONS IN THE CAB

The effect of the new systems on the operations in the tower cab can only be estimated since none of them have been operated under real conditions. However, the work on both the actual tower cabs and the idealized controller stations, as well as consideration of what the various new systems are expected to include, has led to some general conclusions.

There will have to be some adjustments in the way controllers operate because of the lack of space around some of the displays, especially those that must be shared by more than one position. On the other hand, since flight strips will no longer be passed from position to position, the locations of the stations in the cab may be selected on the basis of operational convenience rather than flight-strip passing.

Unless there is a marked change in the TIPS concept; viz., to make provision for extensive scratch-pad operations, the controllers will have to develop more retentive memories or supplement the system with scratch pads of their own. There seems to be evidence that controllers need and use the scratch-pad capability of the flight strips; whether they can adapt to a TIPS environment without scratch pad should be the subject of experiment during the TIPS engineering test phase.

The length and complexity of weather and weather-related messages in the system will increase with the advent of the wake vortex, wind shear and automated meteorological systems. Provisions for handling these data and conveying the information to the controllers and pilots are at the moment fragmented among the various new systems. A concerted effort to standardize and combine the TIPS, ATIS, AV-AWOS, WVAS and wind shear aspects of weather and status messages should be mounted to ensure that controller workloads are not unduly increased and that information flow is not impeded by incompatible formats or processing requirements.

18.4 HUMAN FACTORS ASPECTS OF SYSTEM INTEGRATION

Controller operations in control towers exhibit certain charateristics which are not found in operations in other ATC facilities, namely:

a. high reliance on visual contact with aircraft,
b. controller mobility,
c. frequent standing operations and
d. wide range of ambient lighting conditions.

The design of systems and equipment to be used in the cab must take these factors into account.

Another general feature to be noted is that controllers may have one hand continually occupied with a press-to-talk switch; new equipment should avoid requirements for two-handed operation.

The new systems will not, in general, provide workload relief to the controller in the cab; most of the elements are designed to permit the controllers to do what they are doing now but with a greater degree of effectiveness. They provide more accurate data, make the data more accessible or provide new types of data. This increase in effectiveness generally involves an increased workload - more data to process more aircraft to service and more information to relay.

The introduction of the new systems will also, in general, add equipment to already crowded towers, making the controllers' environment less conducive to efficient operation. New displays and keyboards are called for which could more than fill the available counter space; requiring measures such as the floor-mounting of displays. This would force controllers back away from windows, reducing their, in some cases already restricted, visibility.

To alleviate these two conditions -- controller workload and work-area crowding -- the new systems to be introduced into the cabs should be integrated where possible. The effect of the integration should be:

1) to provide increased processing of data to relieve the controller of the need to estimate or calculate mentally; an example is "time to threshold" for approaching aircraft, and

2) to combine display output in a way which provides information conveniently and efficiently; for example, time-of-day and meteorological readings on a display such as TIPS.

To the extent that the controllers can handle increased workload effectively and safely, their <u>productivity</u> will be increased. The human

factors evaluations and recommendations of this study are all aimed at increasing the assurance that, given these system improvements, controllers will be able to achieve increased system throughput. However, increased controller productivity can not be guaranteed from design studies; hence, the emphasis in the recommendations that simulation studies be initiated as early as is feasible.

18.5 FUNCTIONAL INTEGRATION OF THE SYSTEM

As a general rule, each of the systems being developed under the Major System Development Programs has been designed to act independently of the others. It is appropriate at this time, when deployment plans are being prepared, to think about ways in which TIPS, TAGS, ASDE-3, WVAS, etc. could be implemented in an integrated, cooperative manner. Two areas of possible cooperation suggest themselves.

TIPS should be regarded by all of the other systems as the central communication path in the tower/TRACON complex. This is a natural extension of the current TIPS/ARTS/NAS communications concept and would serve to rationalize and standardize the communications process in the complex.

The data-processing functions of TIPS, TAGS, WVAS, wind shear, and meteorological systems should be integrated in one fashion or another. Both a single minicomputer and a configuration of microcomputers were put forward as possibilities. The advantage of such an approach is that data derived from the sensors of all of the systems would be available for use and for display by any of them. In particular, the weather and weather-related data, from WVAS, wind shear, and meteorological systems, would be available for display on TAGS and/or TIPS and WVAS data would be available to the ARTS metering and spacing function.

18.6 INTERFACES AMONG TOWER CAB SYSTEMS

The interfaces between the controllers and the tower-cab systems, both old and new, and between the systems themselves are a matter of great concern. The matrix in Table 18.6.1 shows the

interfaces between the controller and the ten systems considered in this report. The spaces marked '0' indicate that there will probably be no important interface across which information or control will flow. The spaces marked 'I' indicate that any interface is indirect, as for example; NAS/ARTS, which will exchange information via TIPS. Note in the case of the controller and MLS that a status-only interface is indicated, which is meant to imply that the controller will have the responsibility for monitoring

TABLE 18.6-1 MSDP TOWER-SYSTEM INTERFACES

	Controller	NAS	ARTS	TIPS	TAGS	WVAS	Wind Shear	Meteoro-logical	MLS	FSS	DABS
Controller	X	-	-	-	-	-	-	-	-	-	-
NAS	I	X	-	-	-	-	-	-	-	-	-
ARTS	*	*	X	-	-	-	-	-	-	-	-
TIPS	*	*	*	X	-	-	-	-	-	-	-
TAGS	*	I	I	*	X	-	-	-	-	-	-
WVAS	*	I	*	*	I	X	-	-	-	-	-
Wind Shear	*	I	I	*	I	0	X	-	-	-	-
Meteorological	*	I	I	*	I	0	0	X			
MLS	S	0	0	*	I	0	0	0	X	-	-
FSS	0	*	I	*	0	0	0	I	0	X	-
DABS	I	*	*	I	I	0	0	0	0	0	X

0 = no interface

I = indirect interface

S = status only

* = interface discussed in the text

equipment performance but will not get information from MLS with respect to the air traffic situation.

The interfaces marked with asterisks will be discussed in the paragraphs below, with the discussion of the indirect interfaces interpolated where appropriate.

Controller/ARTS

For the most part, the interface between the controller and ARTS will be unchanged, at least externally, when the new systems are introduced. This will be both because the interface already exists and is in use and because there is a need to maintain continuity of operations for benefit of the controllers. If, however, TIPS is made the communications central exchange among the automation systems as has been suggested, this interface may disappear in favor of the controller/TIPS interface. Careful system design could make the changeover very simple by retaining to a large degree the outward form of the interaction -- making similar actions produce similar reactions in the two situations.

Controller/TIPS

The interface between the controller and TIPS has been the subject of much design effort and probably could be improved only after considerable experimentation or simulation. The only areas of concern which have been noted in this study are the use of TIPS to replace the flight strip without providing a replacement for the extensively used "scratch-pad" function of the strip, and the possibility that the physical placement of the display/data entry devices might be inconvenient or awkward.

Controller/TAGS

The TAGS input and output devices will resemble closely the ARTS and ASDE keyboards and BRITE displays already in use. The interface with the controller does not appear critical at this stage.

Controller/WVAS

The interface between the controller and WVAS is straightforward -- the single display device described earlier. It has been suggested that a more integrated approach be followed by providing WVAS information on the TIPS, TAGS or ASDE-3 display, thus reducing in number the array of devices

confronting the controller. This, of course, has implications for the data-processing activities in the tower, as described above.

Controller/Wind Shear

The remarks above on WVAS hold equally for the interface between the controller and the wind shear system.

Controller/Meteorological

The various meteorological systems in use provide output to the controller via conventional dials and gauges. Much-needed space could be saved, however, if the digitized outputs of the sensors were provided to the TIPS computer for display on the TIPS output device. This would also make the measurements available for distribution to the ARTS and NAS computers as well.

TIPS/NAS

The interface between TIPS and NAS is a major one which has been the subject of much thought on the part of system developers. All of the flight data used in the terminal will pass from NAS to TIPS through this interface. In addition, it is planned that data interchange between ARTS and NAS will pass through TIPS via the same interface. If TIPS is established as communications manager for the tower/TRACON complex, then this interface will be quite busy, serving not only the TIPS needs, but indirectly those of TAGS, WVAS, wind shear and meteorological systems.

FSS/NAS

This FSS/NAS interface exists now and probably will become more automated and more active as VFR flight plans in computer form are made available.

DABS/NAS

The DABS/NAS interface is not defined at present although its general characteristics seem to be known. It is really outside of the scope of this work and is included only for completeness.

TIPS/ARTS

As with the TIPS/NAS interface, the TIPS/ARTS interface has been described in detail for the prototype installation but not for any production system

Again, the interface could serve TAGS, WVAS, wind shear and meteorological systems indirectly.

If arrival separation standards are ever reduced to three miles or less, departure gaps would be eliminated under saturation conditions. Inter-arrival gaps will have to be created (or detected) by M&S and departures will have to be synchronized precisely with these gaps. Departure schedules will have to be sent to M&S and gap times sent to the CD, GC and LC positions, ideally through the TIPS/ARTS interface.

WVAS/ARTS

The interface between WVAS and ARTS will exist for the purpose of passing wake vortex or spacing information to the metering and spacing functions of ARTS. It is recommended elsewhere in this report that the actual message transfer be carried out through the TIPS as a common communications facility; if WVAS precedes TIPS in the field, however, a direct interface, if only temporary, will have to be provided.

The time between changes in meteorological conditions sufficient to produce changes in WVAS indications is estimated to be of the same order of magnitude as the time during which aircraft would be in the approach path, 15 to 30 minutes. Therefore, the dynamic characteristics of the meteorological phenomena will have an effect on the M&S computations and should be taken into account during M&S development.

DABS/ARTS

Except for the possible use by tower operations of the data-link capability of DABS, the interface is not germane to this document. The data link may prove to be an important adjunct to the TIPS and TAGS operation however. Automatic delivery of clearance through TIPS and transmission of MLS-derived position data to TAGS are examples of possible data-link uses.

TAGS/TIPS

The TAGS and TIPS systems will have need to exchange information, such as flight data from TIPS and actual time of arrival from TAGS. If the systems are implemented with separate computers, then a message-exchange capability, hardware and software, must be provided. If, as is suggested earlier in this document, the processing facilities of the two systems

are integrated, then the information transfer will be possible using whatever interprocess communications techniques are provided by the operating system used.

WVAS, Wind Shear, Meteorological/TIPS

These interfaces; i.e., WVAS, Wind Shear and Meteorological/TIPS, are similar to each other in that they will exist only to the extent that the integration suggestions presented earlier are actually implemented. If it is assumed that there will be a microprocessor associated with each sensor to digitize and preprocess the data, then the outputs can be provided to the controller either through separate microprocessors and displays or integrated with TIPS (and indirectly with TAGS) for processing and display. In the first case, no interfaces exist; and in the second case, the interfaces are the hardware and software facilities for accepting the data for processing.

If the interface between WVAS and TIPS is implemented, it can serve to convey wake vortex information to the metering and spacing function of ARTS.

MLS/TIPS

Provision has been made in the MLS design for ground-to-air transmission of such data as condition of runway operational status of the guidance system and weather data. If such data are to be provided to MLS, they should come from TIPS (assuming the integration mentioned above takes place). The interface would be a rather straightforward message - transfer facility.

FSS/TIPS

There is currently no plan for an interface between FSS/TIPS. It is conceivable that allowing flight plans filed at Flight Service Stations to be entered directly into the TIPS data files might prove useful. If so, the interface would presumably be via a phone line and standard hardware/software modules.

If the meteorological data collected at the airport is available in the TIPS processor, then this interface could be used to convey such data to the Flight Service Station, if desired.

18.7 FAILURE MODES IN THE TOWER CAB

There are two aspects of system/failure that have been addressed to some extent in this document: reliability and backup. The first concerns efforts to prevent failures while the second involves the reaction to failures if and when they do occur.

Failure considerations have not really been addressed in the design of the new systems (other than ARTS IIIA) since they are for the most part still in the experimental phase of their development. When the principal characteristics of the new systems are known with some certainty and the deployment plans are relatively fixed, considerable thought must be given to the tradeoffs among costs, individual system reliability and backup operations.

Some relatively simple provisions for continued operation in the event of partial system failure have been considered for the TIPS tower subsystem. The tower supervisor has the capability to reconfigure (through the input-output terminal) the positions served by the various displays. Hence, if a display is disabled, a spare unit can be assigned to that position, or the position can be combined with another to share the same display. A failure in the tower-display processor, while leaving the displays with their last data presentation visible, disables the tower subsystem.

The TAGS/ASDE-3 system will achieve a certain amount of reliability by supplying high-risk components, such as the transmitter/receiver section of ASDE-3, in duplicate. The hybrid system will also provide some duplication of function which will allow the controller to keep working if part of the system goes down. For example, if the ASDE sensor fails, the ATCRBS sensor will still maintain position and identification of all beacon-equipped targets; if the ATCRBS sensor fails, the ASDE sensor will supply at least position information for all targets.

In spite of these efforts, the tower operation will suffer when problems occur in one of the systems because the systems are interrelated in one way or another and hence cannot be protected by measures which affect only individual systems. There must be an inclusive plan which makes the proper tradeoffs, mentioned above. It should insist on high-reliability components or redundant equipment where cost-effective and must make provision for replacement or back-up functions on a systematic basis.

Provision of manual backup in the event of failure would seem to be a serious mistake. The new equipment will replace such things as printed flight strips and stripholders; resorting to scratch pads and handwritten flight strips (without bays for organizing them) would result in an operation more primitive than the most poorly equipped current operations.

A systematic, integrated plan for reliable, continuous operation is needed before any production system is procured.

APPENDIX C. GROUND CONTROL STAFFING REQUIREMENTS

In Reference C-1 an estimate of the hourly operations rates for which one and two ground controllers would saturate was presented. The estimate was for good visibility conditions. Saturation was defined as having the radio voice channel in use continuously for at least one five minute period per hour with the controller unable to service the demand. The estimate was based upon the analysis of radio voice channel tape recordings at many busy airports.[C-2,C-3] The estimate was that one ground controller would saturate at 88 operations/hour and two ground controllers with their workload split evenly would saturate at 175 operations/hour.

To estimate the annual operations rate at which saturation will begin to occur during busy hours, it is first found that at busy airports with annual itinerant operations in excess of 300,000 about 10 percent of the average daily traffic occurs in the busy hour.[C-4] With this information it can be estimated that one ground controller will begin to saturate during busy hours when annual itinerant operations rates exceed

$$\frac{88 \text{ operations}}{\text{busy hour}} \times 10 \times 365 \text{ days} = 320{,}000 \ \frac{\text{operations}}{\text{year}}.$$

To confirm this estimate the number of authorized ground controllers is given in Table C-1 for airports whose annual itinerant operations exceed 200,000. Also listed are their CY 1975 itinerant operations. CY 1975 was used since it corresponded to the authorization data. It can be seen that, in fact, a second Ground Control position is authorized at about 320,000 annual itinerant operations. Total operations were not used to eliminate touch-and-go's which do not impact on Ground Control. Extension of the analysis to two ground controllers results in an initial saturation estimate of 640,000 annual itinerant operations. Notice from Table C-1 that only Chicago O'Hare currently falls in this category.

The above estimate will indicate when a second Ground Control position will be authorized and used occasionally, but it

does not indicate when it will be used regularly. For this estimate, we find from Reference C-5 that for busy airports approximately 90 percent of the traffic occurs within a busy 13-hour period. With this information it can be estimated that one ground controller will saturate during an average hour within the busy period when annual itinerant operations rates exceed

$$\frac{88 \text{ operations}}{\text{average hour}} \times \frac{13 \text{ average hours}}{\text{day}} \times \frac{365 \text{ days}}{\text{year}} \div 0.9$$

$$= \frac{464{,}000 \text{ operations}}{\text{year}} .$$

Extension to two controllers with workload evenly split results in the estimate of saturation on a regular basis at 929,000 operations/year.

These estimates were used in this analysis to estimate the future staffing of Ground Control at the case study airports. The estimates are summarized in Table C-2.

TABLE C-1. CURRENT GROUND CONTROL STAFFING

Airport Name and Location	FY 1975 Itinerant Operations (Thousands)	# Ground* Controllers
ORD Chicago, IL.	690	2
ATL Atlanta, GA.	472	2
LAX Los Angeles, CA.	454	2
DEN Denver, CO.	372	1
DFW Dallas, TX.	346	2
JFK New York, NY	341	2
PHX Phoenix, AZ.	335	1
LGA New York, NY	331	1
SFO San Francisco, CA.	331	2
STL St. Louis, MO.	322	2
MIA Miami, FL.	315	2 Break Point
DCA Washington, DC.	309	1
PHL Philadelphia, PA.	307	1
SNA Santa Anna, CA.	306	1
LGB Long Beach, CA.	291	-**
BOS Boston, MA.	285	1
PIT Pittsburgh, PA.	284	1
MEM Memphis, TN.	279	-**
HNL Honolulu, HI.	271	1
FLL Ft. Lauderdale, FL.	251	-**
DTW Detroit, MI.	244	1
LAS Las Vegas, NE.	242	1
HOU Houston, TX.	225	-**
MSP Minneapolis, MN.	225	-**
SJC San Jose, CA.	213	1
BAL Baltimore, MD.	208	1
CLE Cleveland, OH.	206	1
SJU San Juan, PR.	203	1

*Authorized positions from U.S. Dept. of Transportation, Federal Aviation Administration, Terminal Facility Configuration and Data Survey's except as noted.
**Data not available.

TABLE C-2. GROUND CONTROL STAFFING ESTIMATE

Annual Itinerant Operations	Ground Controllers
0 to 320,000	1 used
320,000 to 464,000	2 authorized; 1 normally used
464,000 to 640,000	2 normally used
Over 640,000	2 used; occasional saturation

REFERENCES FOR APPENDIX C

C-1. Iyer, Dr. R.R., Impact of FAA E&D Elements on JFK International and LaGuardia Airports, MITRE Technical Report MTR-7350, April 1977.

C-2. G. Baran, Et.Al., Airport Surface Traffic Control Systems Deployment Analysis, Department of Transportation, Federal Aviation Administration, FAA-RD-74-6, Jan. 1974.

C-3. F. D'Alessandro, Et.Al., Airport Surface Traffic Control Concept Formulation Study, Department of Transportation Federal Aviation Administration, FAA-RD-75-120-III July 1975.

C-4. Federal Aviation Administration, FAA Air Traffic Activity-Calender Year 1975, U.S. Dept. of Transportation, March 1976.

C-5. U.S. Department of Transportation, Federal Aviation Administration, Airport Surface Traffic Control TAGS Planning Alternatives and Cost/Benefit Analysis, FAA-RD-77-9, January 1977.

220 copies