FAA-EM-78-17

"FILE COPY"

FAA WJH Technical Center
00092043

DEFINITION, DESCRIPTION, AND INTERFACES OF THE FAA'S DEVELOPMENTAL PROGRAMS

MANAGEMENT SUPPLEMENT: SYSTEM INTERFACE/EVOLUTION OPEN ITEMS

SEPTEMBER 1978

79-0299

U.S. DEPARTMENT OF TRANSPORTATION
FEDERAL AVIATION ADMINISTRATION
Office of Systems Engineering Management
Washington, D.C. 20591

RECEIVED
MAR 22 1979

NOTICE

This document is disseminated under the sponsorship of the Department of Transportation in the interest of information exchange. The United States Government assumes no liability for its content or use thereof.

APPROVED BY: Albert P. Albrecht

Albert P. Albrecht
Acting Associate Administrator for
Engineering and Development
Department of Transportation
Federal Aviation Administration

"FILE COPY"

Technical Report Documentation Page

1. Report No. FAA-EM-78-17	2. Government Accession No.	3. Recipient's Catalog No.
4. Title and Subtitle DEFINITION, DESCRIPTION, AND INTERFACES OF THE FAA'S DEVELOPMENTAL PROGRAMS MANAGEMENT SUPPLEMENT: SYSTEM INTERFACE/EVOLUTION OPEN ITEMS		5. Report Date September 1978
		6. Performing Organization Code
7. Author(s) M. E. Kay, J. S. Matney		8. Performing Organization Report No. MTR-7904, Volume III
9. Performing Organization Name and Address The MITRE Corporation Metrek Division 1820 Dolley Madison Blvd. McLean, Virginia 22102		10. Work Unit No. (TRAIS)
		11. Contract or Grant No. DOT-FA79WA-4184
12. Sponsoring Agency Name and Address Office of Systems Engineering Management Federal Aviation Administration Department of Transportation Washington, D.C. 20591		13. Type of Report and Period Covered FINAL
		14. Sponsoring Agency Code DOT/FAA

15. Supplementary Notes The following individuals developed the detailed information in the indicated areas: En Route & TRACON, P.O. Dodge; Tower, Surveillance & Navigation, T.R. Simpson; Flight Service Facilities, W.F. Potter; Data Communications, H.P. Guerber & J.C. Fowlkes; Voice Communications, F.S. Keblawi

16. Abstract

This report is one of a series of documents prepared to describe the evolution of ATC system facilities in the pre-1990 time period as major system improvements currently being developed by the FAA are implemented. This document identifies some of the system interface and time phasing decisions that will be considered by the FAA as system implementation planning proceeds. Two other documents in this series, Volume I and II, describe the ATC system as it is expected to look in the future after the FAA's current F&E procurements and E&D program products are implemented. As those documents were prepared, a number of assumptions had to be made about the eventual system configuration where FAA decisions had not yet been made. These major assumptions are stated in this document. The statement of the assumption is followed by the specific open questions that prompted the assumption and a brief synopsis of FAA activities currently directed to addressing these open questions. The major assumptions discussed in this document are referred to as "Interface/Evolution Open Items" and generally involve two or more large programs and involve questions of preferred technical approach, technical/operational interfaces, or time phasing. The selection of a final course of action is generally not within the jurisdiction of a single program manager. Another set of items referred to as "Interface Adjustments" that address potential design modification that might result in a smoother functioning system are also described in this document. These system adjustments generally involve the extension or modification of a design feature of two or more defined programs and are not considered as significant as the Open Items.

17. Key Words Air Traffic Control, System Description, En Route ATC, TRACON, Tower, ATC System Command Center, Navigation, Surveillance, Communications	18. Distribution Statement Limited Availability. Document may not be released to the National Technical Information Service.

19. Security Classif. (of this report)	20. Security Classif. (of this page)	21. No. of Pages	22. Price
UNCLASSIFIED	UNCLASSIFIED		

Form DOT F 1700.7 (8-72) Reproduction of completed page authorized

PREFACE

The objectives of the system description task as defined by OSEM were basically two-fold: (1) to describe the ATC system as it is expected to look in the future after changes have been made to reflect current F&E procurements and the implementation of the products of the FAA's E&D programs, and (2) to identify any interface design and time phasing issues that need to be resolved by FAA management. Volumes I and II of the Definition, Description and Interfaces of the FAA's Developmental Programs are responsive to the first objective. Those two volumes contain, respectively, an overview description and a more detailed system description. This document is responsive to the second objective with the exception that the document does not identify issues per se but instead identifies and discusses what are called "Open Items" and "Interface Adjustments." This part of the documentation may be of most interest, and use, to top FAA management.

OPEN ITEMS

"Open Items" relate to specific parts of the ATC system evolutionary improvement program where improvements are to be made via the F&E and/or the E&D program but where final decisions have yet to be made as to the specific course of action to be pursued. In most cases, an Open Item involves more than one F&E and/or E&D program and involves questions of the preferred technical approach, technical/operational interfaces, or time phasing. As a result, the selection of the final course of action to be pursued is generally not within the jurisdiction of any single program manager.

The "Open Items" are intended to (1) provide top FAA managers with a fairly comprehensive list of integration/evolution topics that will require continued or additional attention prior to selecting the final course of action and (2) to provide sufficient information for management to conclude that additional action either is or is not needed at this time.

INTERFACE ADJUSTMENTS

The last section of this document identifies some fairly specific changes that might be made to improve the interface between parts of the future ATC system. These are adjustments that generally involve more than one program and more than one FAA program manager but are not considered as significant as the "Open Items."

Based on past experience with previous drafts of this material, it is expected that the situation described in many of the Open Items and Adjustments is a transitory condition and will soon be outdated. The findings in this document were based on information available to the authors as of September 1978. Specific features of the system described herein may be modified as the development cycle provides more information about the technical feasibility and operational desirability of proposed improvements. Also, some improvements may be deferred or dropped from the program and others will be expedited or added as the perceived operational needs of the ATC system, internal FAA priorities, and availability of funds change over time. Inputs from the responsible program manager will be necessary to help bring this material up to date prior to management evaluation of the cited open questions.

ACKNOWLEDGEMENTS

This document, "Definition, Description, and Interfaces of the FAA's Developmental Programs," is based on the assimilation of information from many sources. Many people contributed information as to the description and status of various programs aimed at providing incremental improvements to the ATC System. Various levels of coordination were conducted with FAA personnel concerned with individual program elements that are expected to be a part of the ATC System at some future point in time. Drafts of this document were submitted to the Systems Research and Development Service (SRDS), Airway Facilities Service (AAF), Air Traffic Service (AAT), Flight Standards Service (AFS), National Aviation Facilities Experimental Center (NAFEC), Office of Aviation System Plans (ASP), and Office of Aviation Policy (AVP). The material in this document reflects this coordination cycle. The authors, of course, assume full responsibility for any remaining errors.

TABLE OF CONTENTS

		Page
LIST OF ILLUSTRATIONS		viii
1.	INTRODUCTION	1-1
2.	INTERFACE/EVOLUTION OPEN ITEMS	2-1
3.	INTERFACE ADJUSTMENTS	3-1
APPENDIX A:	SYSTEM INTERFACE/EVOLUTION OPEN ITEMS	A-1
OPEN ITEM 1:	Interface/Integration of Automated Air Traffic Flow Management Functions	A:1-1
OPEN ITEM 2:	Evolution of DABS Capability	A:2-1
OPEN ITEM 3:	Time Phasing of DABS vs Plans to Use DABS Data Link and Other DABS-Dependent Items	A:3-1
OPEN ITEM 4:	Aircraft Separation Assurance	A:4-1
OPEN ITEM 5:	En Route Radars	A:5-1
OPEN ITEM 6:	Terminal Area Radars (ASRs)	A:6-1
OPEN ITEM 7:	Surveillance Data Preprocessors	A:7-1
OPEN ITEM 8:	VAS/WVAS Interface/Integration with ARTS-III Metering and Spacing and En Route Metering	A:8-1
OPEN ITEM 9:	Replacement/Augmentation of NAS 9020 Central Computer Complexes	A:9-1
OPEN ITEM 10:	MLS/ILS/M&S Compatibility	A:10-1
OPEN ITEM 11:	DARC/ETABS/CCC Interface	A:11-1
OPEN ITEM 12:	Terminal/Tower Display and Integration of E&D Products	A:12-1
OPEN ITEM 13:	ATCSCC-NADIN Interface	A:13-1
OPEN ITEM 14:	Upgrading Terminal Area ATC Facilities (ARTS IIIA, ARTS III, ARTS II, TPX-42)	A:14-1

TABLE OF CONTENTS

(Concluded)

		Page
OPEN ITEM 15:	Voice Communications Planning	A:15-1
OPEN ITEM 16:	FSS Modernization and NADIN Communication Schedule Compatibility	A:16-1
OPEN ITEM 17:	Display of Digitized Surveillance Data at TRACONs and Towers	A:17-1
OPEN ITEM 18:	Detection of Turbulence and Low Level Wind Shear	A:18-1
OPEN ITEM 19:	Weather Data Dissemination	A:19-1
OPEN ITEM 20:	Remote Maintenance and Monitoring	A:20-1
OPEN ITEM 21:	Automated Flight Service Station Configuration	A:21-1
OPEN ITEM 22:	Evolution of the ATC System to Include Automated En Route ATC (AERA)	A:22-1
OPEN ITEM 23:	Future Navigation	A:23-1
APPENDIX B:	SYSTEM INTERFACE ADJUSTMENTS	B-1

LIST OF ILLUSTRATIONS

		Page
TABLE 2-1:	INDEX OF INTERFACE/EVOLUTION OPEN ITEMS	2-3
FIGURE A-1:	COMPARISON OF CURRENT AND NEAR TERM CENTRAL FLOW CONTROL COMMUNICATIONS	A:13-2

1. INTRODUCTION

As discussed in Volume I and Volume II of this series of documentation, the improvement of the ATC system is an evolutionary process where improvements are developed, tested, and implemented based on advances in the state-of-the-art in related technology and changes in operational needs. This means that options for implementing the results of the E&D program are kept open until it is possible and timely to make the final implementation decision. As a result, there are few firm plans as to which improvements will be implemented in the future and when they will be implemented. Furthermore, the process has a tendency to cause a deferral of the detailed definition of technical and operational interfaces until close to the time when implementation decisions are made. Thus, in the preparation of Volume I and II of this documentation, it was necessary to make, or accept, many assumptions as to which improvements will be implemented and when they will be implemented. This supplement identifies some of those key assumptions and discusses some of the major questions that the FAA will be addressing prior to reaching implementation decisions. This supplement also discusses some of the smaller design changes that might be considered by FAA program managers that would result in a smoother functioning system.

2. INTERFACE/EVOLUTION OPEN ITEMS

For the purpose of this document, the key assumptions presented in Appendix A are referred to as Interface/Evolution Open Items since in each case additional or continued action in terms of further study is indicated prior to implementation. Each Open Item write-up consists of three parts: Assumptions, Open Questions, and Situation.

Assumptions: Since, by definition, Open Items represent areas of uncertainty with respect to the future, it was necessary for the authors of these documents to make assumptions as to the end result in order to describe the ATC system of the future. The write-up of each Open Item includes a statement of those assumptions. In some cases, the assumptions are deliberately stated in a provocative way to help FAA management focus on the implication of the assumptions.

Open Questions: The material in each Open Item also includes a listing of some of the key questions that the FAA may wish to address during the E&D program prior to arriving at final decisions on implementation. In many cases, the questions posed are already being addressed within the context of current FAA programs. In other cases, additional study may be warranted.

Situation: Each Open Item paper contains a brief discussion of each item including some of the activities currently underway, options that have been or are being considered, and in some cases, the positions of some of the involved parties. This part of the paper is to provide some of the information needed for FAA management to either conclude that the situation is well in hand and needs no additional action or to conclude that additional action is desirable. It should be noted that the "current situation"

reflects only the situation that existed at the time the information was presented to the authors of these documents. The "current situation" is in general a transitory condition. The reader is cautioned to check for recent changes in the status and direction of the programs described in this section before forming any conclusions.

The results of action taken by the FAA on the Open Items may result in a course of action that differs from some of the major assumptions that shaped the system described in Volume I and Volume II. Thus, in the case of each Open Item, there is a possibility of a change that would require modification of the Future ATC System description.

The items in Appendix A are not given in any particular order. The reader interested in referring to all those items affecting a particular ATC facility may be aided by the cross references given in Table 2-1.

TABLE 2-1
INDEX OF INTERFACE/EVOLUTION OPEN ITEMS

INTERFACE/EVOLUTION OPEN ITEM	ATC FACILITY CLASS							
	EN ROUTE	TRACON	TOWER	ATCSCC	FLIGHT SERVICE	SURVEILLANCE	NAVIGATION	COMMUNI-CATION
1. Interface/Integration of Automated Air Traffic Flow Management Functions	X	X		X				
2. Evolution of DABS Capability	X					X		X
3. Time Phasing of DABS vs Plans to Use DABS Data Link and Other DABS-Dependent Items	X	X				X		
4. Aircraft Separation Assurance	X	X				X		
5. En Route Radars	X					X		
6. Terminal Area Radars (ASRs)		X				X		
7. Surveillance Data Preprocessors	X	X				X		
8. VAS/WVAS Interface/Integration with ARTS III Metering and Spacing and En Route Metering	X	X	X					
9. Replacement/Augmentation of NAS 9020 Central Computer Complexes	X							
10. MLS/ILS/M&S Compatibility		X					X	
11. DARC/ETABS/CCC Interface	X							
12. Terminal/Tower Display and Integration of E&D Products		X	X					
13. ATCSCC-NADIN Interface				X				X
14. Upgrading Terminal Area ATC Facilities (ARTS IIIA, ARTS III, ARTS II, TPX-42)		X						
15. Voice Communications Planning	X	X	X		X			X
16. FSS Modernization and NADIN Communication Schedule Compatibility					X			
17. Display of Digitized Surveillance Data at TRACONS and Towers		X	X			X		
18. Detection of Turbulence & Low Level Wind Shear	X	X				X		
19. Weather Data Dissemination	X	X						
20. Remote Maintenance and Monitoring	X	X	X			X	X	X
21. Automated Flight Service Station Configuration					X			X
22. Evolution of the ATC System to Include Automated En Route ATC (AERA)	X							
23. Future Navigation Systems							X	

3. INTERFACE ADJUSTMENTS

The Interface Adjustments described in Appendix B generally address potential small system changes that can suitably be addressed below the FAA Division Chief level. These adjustments were identified during the course of the study and were in most cases discussed with FAA or MITRE Metrek personnel directly involved with the associated programs.

A number of items identified in the early portion of the study period have already been resolved and are not included in this appendix. In other cases, action is underway to either make the adjustment or to conclude that some other course of action is warranted. There are some valid differences of opinion about the merit of adopting some of the specific changes called for, particularly on an expedited basis. Therefore, cited items should be viewed as a check list of potential adjustments that merit attention before the systems are implemented and not as a strongly recommended set of immediately required design modifications. As with the Open Items, actions taken by FAA program managers may result in a course of action that eliminates or modifies the need for the adjustments. In this case, the recommendations in this Appendix would need to be changed accordingly.

The items in Appendix B are arranged in the order in which the facilities they primarily relate to were discussed in Volume II. Thus, the items referring primarily to En Route Facilities, which were described in Chapters 2 of Volume II are designated as items B2-1, B2-2, etc. A cross reference of items in Appendix B that are pertinent to each facility may be found in the final section of each chapter of Volume II.

APPENDIX A

SYSTEM INTERFACE/EVOLUTION OPEN ITEMS

OPEN ITEM 1: Interface/Integration of Automated Air Traffic Flow Management Functions

GENERAL:

Today, there are several programs underway, or planned, for automating certain ATC functions related to the management of the flow of air traffic within CONUS airspace. Collectively, those functions can be thought of as constituting an Air Traffic Flow Management System. Those functions include Central Flow Control, Local Flow Control, En Route Flight Plan Conflict Probe, En Route Metering, and ARTS III automated Metering and Spacing. Also related to those functions are operational procedures for reducing fuel consumption such as Fuel Advisory Departures (FAD) for taking delay on the ground to avoid airborne delay, and profile descents for minimizing fuel consumption during the descent phase of flight. The interfaces between the various parts of the Air Traffic Flow Management System have, in some cases, been defined conceptually but have yet to be reflected in specific designs.

THE ASSUMPTION:

The following assumptions were made regarding the interfaces among the various functions:

1. Central Flow Control predictions of en route delay would continue to be improved through enhancements in delay forecasting and more data inputs from the en route and terminal ATC facilities, but Central Flow Control (CFC) would not have any automated interface with En Route Metering or ARTS III M&S. The use of Fuel Advisory Departures would be refined to reflect the improved CFC delay predictions.

2. Initial versions of Flight Plan Conflict Probe (FPCP) and En Route Metering would be developed as independent functions. Later versions would be integrated so that the En Route Metering advisories would provide for conflict-free metering instructions. En Route Metering would also be developed to consider efficient ways of absorbing delay to conserve fuel. This will include profile descents, speed changes, path stretching, and holding patterns.

3. The function of Local Flow Control and the concept of providing information specifically tailored for the Local Flow Controller will not be improved upon over and above the improvements that will be associated with en route metering and FPCP.

4. The implementable version of ARTS III Metering and Spacing (M&S) will include flexible control algorithms that will permit profile descents with little or no vectoring during low demand periods and will utilize tighter control procedures with potentially more vectoring during high demand periods. The tighter procedures are invoked to improve the interarrival spacing at the threshold and thus maintain high runway capacity during high demand periods.

5. An interface will be developed between M&S and terminal area Conflict Area to provide conflict free M&S commands.

6. An automated interface will be developed to maximize efficiency of operations between En Route Metering and ARTS III M&S.

THE OPEN QUESTIONS:

1. How far back along the flight path should one attempt to take delay? This question indirectly addresses the question as to the merit of extending automated en route metering beyond the bounds of the arrival center and whether there is merit in providing automated coordination between centers or from the terminal facility or other centers via the Central Flow Control function.

2. Is there any merit in designing an integrated metering and spacing system that encompasses the collective functions of En Route Metering and ARTS III M&S and considers the use of profile descents from the cruising altitude on down to the runway?

3. Is there merit in developing some way to improve the accuracy of the derivation of terminal area acceptance rates which are established by the terminal area controllers and used by the center as an objective of En Route Metering? Data taken at Denver indicates that excessive en route delay and airport underutilization may result at high density airports if the acceptance rate is under-specified. Conversely, excessive delay in the terminal area will occur if the acceptance rate is over-specified.

4. Now that Local Flow Control has been dropped as a specific SRDS program, is there any merit in making changes to the scope of the En Route Metering task to incorporate some of the Local Flow Control functions once included in the Local Flow Control automation program?

5. Is there a need for additional study as to how information on delay taken on the ground should be passed through the ATC system automatically and the possible impact on the design of ARTS III M&S as well as En Route Metering? Plans for using delay taken on the ground prior to takeoff as part of the Fuel Advisory

Departure procedures will be considered in the development of En Route Metering, but the way in which the "delay taken" information will be used throughout the system is not clear.

6. Is there a need for including provisions for profile descent in the design of the ARTS III M&S? Since ARTS III M&S will be used at high density airports where it is desirable to maximize airport acceptance rates, the objective of maintaining the highest accuracy in the delivery of aircraft may be more important than the use of profile descents. If there is a need for a trade-off between designing M&S to accommodate profile descents vs. providing higher accuracy in aircraft delivery, then some analysis will be needed to determine which function should be given the overriding consideration.

7. Now that Central Flow Control is being dropped as a specific SRDS development activity, is there any merit in expanding the scope of one of the related development programs, such as the latter phases of the En Route Metering program, to include an assessment of CFC information exchange requirements and control jurisdiction boundaries as they relate to the proposed system improvements described above?

8. Should the M&S design incorporate an automated interface with the Vortex Advisory System (VAS) and, later, with the Wake Vortex Advisory System (WVAS) to achieve the airport capacity benefits of reduced longitudinal spacing on final approach that are expected as a result of implementation of VAS and WVAS? (This question is discussed in more detail in Open Item 8.)

9. What real-time advanced data is needed on airport acceptance rates as a function of the availability and efficiency of terminal system improvements designed to maintain safe, high capacity, airport operations during adverse weather conditions? The use of systems designed to alert the controller to adverse wind shear (LLWSAS and AWSDS) and airport surface traffic control equipment (ASDE, TAGS) would modify acceptance rates in ways that should be factored into the flow control process.

THE SITUATION:

A brief description of each of the air traffic flow management automation programs is presented below along with an identification of the responsible FAA agency involved.

- Central Flow Control (CFC) is an automation program to assist the Flow Control Specialist in the ATC System Command Center (ATCSCC) in the nationwide flow of traffic. This includes provisions for passing on delay estimates to users as inputs to their decision as to whether to take part of the delay on the ground as part of the Fuel Advisory Departure (FAD) Procedures. Current work on CFC enhancements has been under the direction of SRDS. This work has included increases in communication, automation and data base capabilities. This work has resulted in the replacement of the Airport Information Retrieval System (AIRS) which was supported by leased computer services with a new ARTCC to CFC communication approach and a dedicated FAA 9020 computer and associated new software located at the Jacksonville ARTCC. SRDS involvement with the ATCSCC is expected to end in late 1978 with the completion of the Jacksonville work. The Air Traffic Service has specific plans to enhance other ATCSCC functions,

FAA WJH Technical Center
00092043

notably, the Airport Reservation Office (ARO) and the Central Altitude Reservation Facility (CARF), but plans for further additions to the CFC function will not be formulated until experience has been gained with the Jacksonville system.

FAA Managers: ARD-102
AAT-370

- En Route Metering is an automation program to assist the en route controllers in delivering aircraft to the arrival fix at a certain rate or at a fixed time as specified by the terminal facility. At present, SRDS is pursuing a two phased approach to developing En Route Metering. The first phase, which is currently at the draft functional specification stage, addresses a metering capability that can be implemented at any en route center and will interface with the standard three or four poster arrival fix design. The initial capabilities utilize manual interfaces with the affected terminal and adjacent ARTCCs to deliver aircraft to the terminal at a rate that is compatible with existing airport conditions. The second phase is planned to address a metering design that incorporates automated interfaces with the associated TRACONs and adjacent ARTCCs. The second phase will also provide for an automated interface with the Flight Plan Conflict Probe function and the ARTS III Metering and Spacing function.

  Some initial work has also been done by the operating services on the en route metering capability at the Denver

ARTCC. This work is currently planned to be demonstrated in 1978 and would be a candidate for system-wide adoption.

Initial Effort: NAS Change Proposal 4319A

FAA Manager: AAT-330
FAA Developer: Denver Center

Follow-On Efforts (Two Phase Program)

FAA Manager: ARD-110
FAA Developer: AAT-520

- Local Flow Control was, until recently, carried on the books by the FAA (ARD) as an automation program to assist local flow controllers at ARTCCs in controlling traffic flow. The objectives were to decrease departure delays, equalize delays to airspace users, and to eqalize workload on sectors within the ARTCC. That program has recently been dropped as an ARD program line item. Some improvements related to the Local Flow Control function have been developed at Denver and are currently planned to be incorporated in late 1979 as NCPs.

NCP 4134: En Route Delay Calculation
NCP 4135: Local Flow Control Ground Delay Messages
FAA Manager: AAT-330

- Flight Plan Conflict Probe is an automation program designed to provide a planning tool to the en route sector controller so he can advance, or probe, aircraft positions ahead of time to see if there are any potential future conflicts between flights. This function is related to traffic

flow management in that changes to flight plans for improving traffic flow should, if practical, be done in such a way as to avoid generating flight plans with potential future conflicts. The functional specification for FPCP has been approved and coding for this function is currently being prepared by the NAS software contractor at NAFEC.

FAA Manager: ARD-110
FAA Developer: AAT-520

- Terminal Area Metering and Spacing is an automation program to assist the approach controllers in ARTS III facilities in the metering of aircraft to the final approach gate and improving the accuracy in the interarrival timing between aircraft so spacing is more consistently close to the desired longitudinal spacing on final approach. Work on this function has been underway for a number of years with the most recent efforts concerned with developing a demonstration M&S system at Denver's Stapleton Airport as well as developing testing and performance measure procedures for a widely implementable M&S design. Metering and Spacing development work is currently being reoriented to focus on what is referred to as an "Implementable M&S." The initial activity is directed toward the development of guidelines as to how an Implementable M&S design would have to be adapted to meet the unique site specific airspace, runway, and operating characteristics of the major air carrier airports. Current FAA thinking calls for the final M&S design to have automated interfaces with En Route Metering and with Terminal Conflict Alert to the

extent that M&S vector advisories will be pre-assessed to minimize the creation of conflicts and triggering of Conflict Alert controller advisory messages.

FAA Manager: ARD-120
FAA Developer: AAT-530

Each program previously described is aimed at initially producing a "stand alone" capability so it can provide a useful function by itself in case the others are not implemented. Interface designs are logical extensions of the initial designs.

OPEN ITEM 2: Evolution of DABS Capability

THE ASSUMPTION:

1. The DABS capability will be realized by a direct replacement of ATCRBS sensors with DABS sensors rather than by first upgrading ATCRBS sensors to include a monopulse detection and processing capability and then, at a later date, upgrading those sensors to the DABS configuration.

2. The DABS sensors installed for en route surveillance will include back-to-back antennas to increase the data rate. This assumption follows from a related assumption that ATARS will be implemented at the en route DABS sensors.

3. DABS sensors for improved surveillance and data link capability will be implemented at the earliest reasonable date. A corollary assumption is that the complete DABS sensors will be implemented sufficiently soon as to preclude the need for earlier installations of just the DABS Data Link capability at locations where the full DABS capability will eventually be deployed.

4. Initial DABS/ATARS implementation will be based on single site/collision avoidance capability. DABS surveillance information will be combined at the associated control facilities. Subsequent to the initial implementation, provisions will be made for exchanging data between selected DABS/ATARS sites to improve their collective collision avoidance capability. Several options are being explored to provide for the exchange of information. One of these options, the coordination through the associated ATC facility, was assumed in this document.

an open question. If the FAA elects to fund for a minimum cost DABS implementation plan, the assumption made herein may prove to be incorrect.

With respect to Open Question No. 3, questions continue to arise as to whether DABS with its integral data link is the best way to improve the ATC secondary surveillance system and provide for air-ground-air data link communication. The DOT has indicated that it will not take action on future DABS funding until such time as studies of alternatives have been completed in response to earlier DOT requests. Thus, to those in responsible positions outside the FAA, the selection of DABS in preference to other alternatives is still an open question. This question is in the process of being resolved via a DABS alternatives paper that is being prepared by ARD-200 for transmittal to the DOT. That paper concludes that the overall cost of DABS plus ATARS to the users and to the government collectively is substantially lower than the costs of a similar system based on ATCRBS with selective addressing and a VHF data link.

All the questions discussed above are expected to be addressed by the DABS Transition Planning Working Group. That Group was formed at the direction of the Systems Requirements Group. The charter of the TPWG is to prepare a recommendation as to whether DABS implementation should be undertaken and to develop an implementation strategy under the assumption that implementation will be undertaken. The actions of that Working Group and the resultant official decisions on implementation could close out this topic as an Open Item. Those decisions could also impact the current E&D program if the implementation strategy calls for implementing sensors which differ from those currently under development.

OPEN ITEM 3: Time Phasing of DABS vs Plans to Use DABS Data Link and Other DABS-Dependent Items

THE ASSUMPTION:

It was implicitly assumed that the FAA will develop a plan for using the DABS Data Link capability on a schedule that is consistent with the DABS implementation schedule and that the benefits, as perceived by user groups, would result in installation and use of associated avionics.

THE OPEN QUESTIONS:

1. Are FAA plans to use the DABS Data Link capability operationally properly phased with respect to plans to implement DABS?

2. Are schedules for modifying ATC facilities to interface with DABS compatible with the DABS schedule?

THE SITUATION:

At the time this Open Item was first prepared, there was a substantial inconsistency between the planned schedules for implementing DABS and plans for using the DABS Data Link capability. There were also inconsistencies between the DABS schedules and plans for modifying ATC facilities to interface with the DABS sensors. As of the date that this document was finalized for publication, those major inconsistencies had been resolved. Nevertheless, this is judged to still be a potential problem involving the following programs:

1. ATARS: The design and schedules for DABS and ATARS indicate that ATARS should be implemented along with DABS

at those DABS sites scheduled to receive the ATARS capability. Currently, both ATARS and DABS are tentatively scheduled for implementation in mid-1984.

2. Interface with ARTCC and ARTS Facilities: Technical Data Packages for interfacing DABS with its associated ATC facilities are scheduled to be definitized by the early 1980's.

3. Use of DABS Data Link for ATC Purposes (Other than ATARS and Advanced Automation): ARD is developing a program plan to identify and explore the potential uses of the DABS Data Link for ATC purposes other than ATARS and Advanced Automation. That program is being defined to include experiments and demonstrations and will involve representatives from various user groups. The preliminary schedule calls for a conclusion of experiments in early 1980 under the assumption that DABS will be implemented in the 1982-1984 era. The use of the DABS Data Link in the pre-AERA time frame, for other than ATARS use, will be defined as a result of this work. It is important that the work be completed in time to support the development of a course of action that will make appropriate use of the DABS Data Link as soon as practical after the data link capability is available.

4. AERA: The Advanced En Route Automation capability for increasing controller productivity in the en route centers will use the DABS Data Link if available. AERA is not expected to be used operationally until some time after DABS has been implemented at the en route surveillance sites. There is no apparent inconsistency between DABS and AERA schedules.

The schedules for DABS and the related items discussed above have a tendency to change with time. Thus, the plans for implementing DABS versus plans for using DABS should be considered as an Open Item until such time as implementation plans have been firmly established.

OPEN ITEM 4: Aircraft Separation Assurance

THE ASSUMPTION:

1. The assumption was made that all of the programs aimed at providing automated aids to the pilot and the controller for the avoidance of midair collisions will be successful and will be implemented. These programs include:

a. En Route Conflict Alert.

b. En Route Conflict Resolution advisory function.

c. Terminal Conflict Alert (ARTS III sites).

d. Terminal Conflict Resolution advisory function (ARTS III sites).

e. ATARS (at all DABS sites).

f. BCAS -- "active only" for initial implementation but followed by more sophisticated systems later.

2. It was further assumed that the technical designs of each of the capabilities listed above will be realized within an overall design of an airborne separation assurance system which will assure proper interoperability among the various features and avoid presenting either the pilot or the controller with conflicting instructions or advisories.

THE OPEN QUESTIONS:

1. Can all the implemented versions of the systems identified in Assumption 1 above be designed in such a way that they can

function together effectively as an overall airborne collision avoidance system without providing either the controller or the pilot with conflicting advice as to what actions should be taken to avoid potential midair collisions?

2. What are the potential trade-offs between designing relatively simple interfaces and rules for integrating the systems to avoid conflicting advisories at reduced levels of effectiveness compared with more complex and costly ways of interfacing the systems to achieve the maximum level of effectiveness?

THE SITUATION:

The FAA's Office of Systems Engineering Management initiated an effort to investigate the interface/integration problems associated with the various aircraft separation assurance programs at about the same time that this System Description task was being defined. A substantial effort was undertaken under OSEM chairmanship to determine the specific interface designs that would be necessary to assure appropriate compatibility among those systems. Since this interface/integration problem was undergoing such extensive analysis, it was assumed by the System Description Team that the results of that work would provide the answers to the Open Questions and provide the guidance required to place all of the FAA's aircraft separation assurance programs in proper context with one another. That work has been completed and a draft report has been prepared.

Follow-on action by FAA management will be required to reach agreement as to the course of action to be pursued and continued attention will be required to insure that the agreed to course of action is implemented. Thus, this should remain an Open Item until it becomes obvious that special management attention is no longer warranted.

OPEN ITEM 5: En Route Radars

THE ASSUMPTION:

1. It was assumed that no major changes would be made to improve either aircraft detection or weather detection in the en route airspace in the Near Term system (prior to 1983).

2. ARSRs (including the new ARSR-3s) will be modified to improve both their weather detection and aircraft detection capabilities in the Far Term. Aircraft detection will be improved through the addition of MTD. Weather detection will be improved through the addition of a separate ARSR weather channel.

3. As a further step in the improvement in the detection of weather, particularly turbulent weather, the FAA will join with the National Weather Service (NWS), and the Air Weather Service (AWS) in the development of a new three-dimensional (3D) weather detection radar. That new 3D radar will be implemented throughout the conterminous U.S. to provide coverage of airspace of interest to the ARTCCs.

4. New ARSR-4s will be procured to replace older tube type radars to reduce maintenance costs and improve reliability. The new ARSR-4s will include both an MTD type capability for aircraft detection and a separate weather channel. (This implies that the FAA intends to continue to maintain and operate primary radars for en route surveillance for the foreseeable future.)

5. For the Far Term, it was assumed that the en route weather detection capability would be provided by both the ARSRs (ARSR-4 and the modified ARSRs) and the Joint Use 3D Weather Radar.

THE OPEN QUESTIONS:

1. Is a course of action, as assumed above, that does not provide for any major improvement in weather detection in the en route airspace prior to 1983 an acceptable course of action to FAA management?

2. Will the incremental benefits resulting from the planned modifications of the L-band ARSRs for improved weather detection be great enough to warrant the incremental costs?

3. Similarly, will the incremental benefits resulting from the planned modifications to improve aircraft detection be sufficiently great to warrant the incremental costs -- especially if there is a decrease in the reliance on primary radar for en route aircraft surveillance?

4. How do the plans for modifying existing ARSRs fit in with plans for replacing ARSRs with new ARSR-4s which are now in the early planning phases?

5. If plans to enter into a joint program with NWS/AWS for the development and operation of a 3D weather radar are realized for improving en route weather surveillance, and if the reliance on primary radar for aircraft surveillance in the en route airspace continues to decline, will the need for primary radar diminish to the point where the procurement of new ARSR-4s, and perhaps the continued operation and maintenance of the older ARSRs, need to be reconsidered?

THE SITUATION:

At the time the System Description documents were prepared, it appeared that the FAA plans for the use and improvement of ARSRs

for en route surveillance of both weather and aircraft and the plans for a joint development and operation of a new 3D weather radar with NWS/AWS were in a state of flux. As a result, assumptions as to what would be realized in the Near Term and Far Term ATC system configurations were considered as more tenuous than in any area other than voice communications. That uncertainty seemed to be associated with a recent increase in emphasis on hazardous weather detection and the consideration that was being given to all possible alternatives for improving weather detection in the en route airspace. Some of the alternatives other than the course of action assumed by the System Description Team included:

- Earlier modifications to the ARSRs to provide an interim improvement in weather detection even at the expense of some degradation in aircraft detection.

- And, at the other extreme, abandoning any plans for improving weather detection by the L-band ARSR radars and concentrating on increased use of existing NWS S-band weather radars as an interim measure and for the longer term on the joint FAA/NWS/AWS development and implementation of an improved S-band weather radar.

(NOTE: The alternatives for improving en route surveillance for weather detection are being considered within the context of an FAA Preliminary Program Plan for improving the Aviation Weather System.)

OPEN ITEM 6: Terminal Area Radars (ASRs)

THE ASSUMPTIONS:

1. It was assumed that no major changes would be made to improve either aircraft detection or weather detection in the Near Term system (prior to 1982).

2. ASRs (including the new ASR-8s) will be modified to improve both their weather detection and aircraft detection capabilities. Those two modification programs will be made sequentially. Aircraft detection will be improved through the addition of an MTD. Later on, the weather detection capability will be improved through the addition of a separate ASR weather channel.

3. As a further step in improving the detection of turbulent weather in the terminal area, the FAA will depend on the use of the joint FAA/NWS/AWS 3D weather radar at those terminal areas where such coverage is available (see Open Item 5). A 3D weather detection capability will be provided at other terminal locations through a further modification of the ASRs to include pencil beam antennas and pulse doppler processing techniques.

4. The 3D weather detection capability may also provide for the detection of turbulence and low level wind shear under all weather conditions, including clear air.

NOTE: The above implies that the FAA intends to continue to operate primary radars for terminal area surveillance for the foreseeable future.

THE OPEN QUESTIONS:

The open questions for the terminal area closely parallel those stated in the prior Open Item 5 on the en route ARSRs. It did

appear, however, that there was more unanimity of opinion that the S-band ASRs would be modified for improved weather and aircraft detection than there was with respect to making similar improvements for the L-band ARSR radars. The most pertinent open questions with respect to the evolutionary improvement in terminal area primary radar surveillance, ASRs, were as follows:

1. Is a course of action, as assumed above, that does not provide for any major improvement in weather detection in the terminal airspace prior to 1982 (except for LLWSAS) acceptable to FAA management?

2. Would it be beneficial to upgrade both the weather detection and the aircraft detection capabilities at the same time instead of first upgrading the aircraft detection capability and then, six months later, upgrading the weather detection capability?

3. Are the incremental benefits of a 3D weather detection capability vs a 2D capability in the terminal area sufficient to warrant the cost of a 3D capability?

4. If a 3D weather detection and evaluation capability is required in the terminal area, should the FAA attempt to satisfy those requirements in whole or in part by depending on a joint FAA/NWS/AWS 3D weather radar program or should the FAA develop and implement a separate capability to satisfy terminal area requirements?

5. Is the state-of-the-art with respect to radar detection of turbulence and wind shear under clear air conditions sufficiently advanced to warrant consideration of the development of systems for operational use?

THE SITUATION:

There is a six month span between the planned implementation of a modification of the ASRs to provide an improved aircraft detection via MTD and the planned implementation of another modification to provide a separate 2D weather channel. The separate 2D weather channel would also use part of the MTD processors that would be used in the improved aircraft detection modification. Consideration might be given to making these modifications as part of one program. Such a consolidated program might be more efficient and also might preclude the need for multiple modifications to the surveillance data preprocessors (see Open Item 7).

With respect to the possibility of realizing an improved weather detection capability prior to 1982, there are apparently some options under study which might provide some increases in capability at an earlier date. One option considers the use of the existing second channel that is now used in a stand-by mode for aircraft surveillance.

With respect to the reliance on the joint NWS/AWS 3D radar program, it seemed unlikely that such a joint program would result in the deployment of enough of the joint use radars to satisfy FAA needs in the terminal area. If that is the case and if there is a real need for 3D weather information in the terminal area, then the assumption that the FAA will develop and implement a 3D radar may be realized. Whether such a capability should be realized through a modification to ASRs or through the development of a new special weather radar remains an open question.

With respect to the detection of turbulence and wind shear by radar during clear air conditions, the System Description Team was informed that the development of such a capability would be included in the development of any new terminal area 3D weather detection and processing system. Based on those plans, the System Description Team included such a capability in the Far Term system description. However, based on the limited information available to the System Description Team, there seems to be some question as to the technical feasibility of such a development program.

As in the case of the en route radars, many of the questions with respect to improved terminal area surveillance are associated with what should be done to improve weather detection. Here again, there are some provisions for examining some, but not all, of the open questions within the context of the FAA's Preliminary Program Plan for improving the Aviation Weather System.

OPEN ITEM 7: Surveillance Data Preprocessors

THE ASSUMPTIONS:

1. CD-2s will be procured and implemented for the preprocessing of ARSR and ATCRBS en route surveillance data. In the Far Term, these CD-2s will be modified twice: first to accommodate the MTD and later to accommodate an ARSR weather channel. Within a few years, the CDs will be replaced by DABS Processors (mid-1984).

2. SRAPs (sometimes referred to as SRAP I) will be procured and implemented for the preprocessing of ASR and ATCRBS terminal area surveillance data. The SRAPs will be located at the ARTS III TRACON facilities. Those same SRAPs will go through two modification programs. The first modification will be to accommodate the addition of MTD to the ASRs. The second modification would come about six months later to accommodate the separate ASR weather channel. Six months later, the modified SRAPs would be replaced by the DABS processors.

THE OPEN QUESTION:

1. Can (should) the planned modifications to ATCRBS, ASRs, and ARSRs and the planned procurements of new surveillance systems including DABS, ARSR-4s, and ASR-9s be time phased to minimize the cost of multiple modifications to the CDs and SRAPs?

THE SITUATION:

During the early phases of the System Description task, it appeared that as many as four different changes to the en route surveillance data preprocessors (CD-2s) would be required between now and 1984 to accommodate various changes then planned

for the en route surveillance sites, i.e., add monopulse detection and processing (AMPS), then add MTD to ARSRs, then add a separate weather channel, and then add the DABS capability. Similar modifications would have been needed for the terminal area surveillance data preprocessors (SRAPs). The need for so many changes to keep the preprocessors compatible with the surveillance system was substantially reduced by the FAA plans to go directly from ATCRBS to DABS without an interim AMPS and to upgrade both the weather and detection capability of the ARSRs at the same time. If plans to upgrade the ASRs for improved weather and aircraft detection could be pursued on the same schedule, a further efficiency might be realized.

It is understood that the modifications of the SRAPs and the CD-2s are not necessarily difficult or costly undertakings. Therefore, when taken as a single item, the number of modifications required to the CD-2s and the SRAPs during the evolutionary improvement to the present ATC system may not be a matter of major concern to FAA management. The number of modifications needed to the preprocessors is, however, indicative of the number of major changes taking place in the surveillance systems that may not be time-phased for maximum efficiency. At the moment, the assumptions on planned en route surveillance improvements appear to minimize the need for CD-2 modifications while the assumptions on planned terminal area surveillance improvements indicates an opportunity for better time-phasing.

OPEN ITEM-8: VAS/WVAS Interface/Integration with ARTS-III Metering and Spacing and En Route Metering

THE ASSUMPTION:

1. A manual interface will be established between ARTS M&S, the Vortex Advisory System (VAS) and en route metering that will permit the use of reduced longitudinal separations when the VAS indicates that wake vortex conditions are favorable.

2. As the VAS evolves to a more capable Wake Vortex Avoidance System (WVAS) an automated interface will be implemented between the cited system elements to allow the benefits of further reductions in longitudinal spacing (possibly tailored on an aircraft pair basis) to be operationally realized.

THE OPEN QUESTION:

1. Is there a need for an automated interface between VAS and ARTS III Metering and Spacing? Between WVAS and ARTS III M&S?

2. Will an automated interface between VAS and/or WVAS and ARTS III M&S also require a modification to the ARTS III/En Route Metering Interface?

THE SITUATION

VAS/ARTS III M&S/En Route Metering

The objective of the VAS program is to provide the approach/local controllers with an indication (green light) as to when separations can be safety reduced to 3 nmi for all traffic. Today, VAS is being developed as a stand-alone system, i.e., it does not have a technical interface with any other automated

ATC function. When the green light first goes on, the approach controller is expected to make changes to metering and spacing of aircraft within the terminal area to take advantage of the reduction in allowable spacing. Presumably that change would also be passed back to the en route controller responsible for En Route Metering in the form of an increase in the acceptance rate specified by terminal control. When the red light goes on, the same process is involved, but toward lower acceptance rates. An examination of the operational procedures for making maximum use of the VAS green light/red light system with manual M&S and en route metering is currently scheduled to start at O'Hare in the near future.

There are currently no plans for having an automated interface between VAS and automated ARTS III M&S or with automated En Route Metering. The question is whether there would be any benefit in having such an interface and, if the benefits are sufficiently great, how to achieve the interface. Conceptually, the interface might eliminate the need for the controller to manually reconfigure the use of the airspace and adjust the inputs to the automated ARTS III M&S every time the VAS calls for a change in longitudinal separation. The automated VAS/M&S interface might also include the determination of changes to runway usage needed to maximize airport throughput capacity as a function of the VAS green/red indicators. The potential benefits would be to reduce controller workload, and possibly increase airport throughput--especially during the transition period from one VAS condition to another.

Additionally, it was pointed out in Open Item 1 in this series of papers, that some way needs to be found to improve the accuracy of the predicted terminal area acceptance rates that the terminal control facility provides to the ARTCC for use in the En Route Metering function. The development of any such system should consider an interface with VAS.

WVAS/ARTS III M&S/En Route Metering

The objective of the WVAS program is to allow further reductions in separation below those possible with VAS by refining prediction techniques and validating predictions via wake vortex sensors. Specific designs for the WVAS sensors and associated automation for wake vortex prediction are still under study by the FAA. Presumably, the WVAS system will provide for some tailoring of the safe separation requirements to match vortex conditions and types of aircraft. This is in contrast to VAS which allows for just two conditions, i.e., either a 3 nmi separation between all aircraft (green light) or maintaining today's separation standards (red light). As a result, WVAS will probably provide indications of changes in safe separation more frequently than VAS and over a wider range of safe separation values. In order to achieve the full benefits of WVAS it will be necessary to find some way to change en route metering and terminal metering and spacing procedures to be responsive to a new variable--the runway acceptance rate as seen by WVAS. This raises several questions that the FAA will be addressing before final decisions are made regarding the development and implementation of WVAS. These include:

1. Will it be necessary to change the ARTS III M&S algorithms to accommodate dynamic inputs from WVAS on safe aircraft separations?

2. Will the need for changes ripple back through ARTS III M&S and also impact automated En Route Metering?

3. Are the time constants associated with the dynamic nature of the problem so long that the conceptual benefits of WVAS cannot be fully realized in a real air traffic control situation?

OPEN ITEM 9: Replacement/Augmentation of NAS 9020 Central Computer Complexes

THE ASSUMPTIONS:

The NAS 9020 Central Computer Complexes will be the primary computer capability at ARTCCs through the 1980s. The 9020's will be augmented as-needed to accommodate forecasted increases in air traffic and the full spectrum of planned ATC improvements. These improvements include En Route Metering, Flight Plan Conflict Probe, En Route MSAW, Conflict Alert Enhancements, Conflict Resolution, Direct Access Radar Channel, Electronic Tabular Display Subsystem, Digitized Weather Data, DABS Data Link, and ATARS.

THE OPEN QUESTIONS:

1. When should the FAA plan to replace the NAS 9020 Central Computer Complexes (CCCs) and associated 9020 data processing systems at the ARTCCs?

2. Will the addition of new NAS capabilities such as DARC and ETABS contribute toward longer range plans for replacing the 9020s or make the transition more costly and difficult? (Do implementation plans for the new capabilities call for compatible hardware/software or will those plans result in a proliferation of data processors and software that may not be consistent with long range goals?)

3. How should the 9020s be replaced? By a switch-over to a replacement complex or by gradual augmentation of the 9020s and a gradual phase out of dependence on the 9020s?

4. Will the 9020, even with realizable augmentation, be able to accommodate forecasted increases in traffic and all of the ATC enhancements projected for the pre 1990 era?

THE SITUATION:

Within the FAA, it is recognized that the 9020s will have to be augmented to accommodate forecasted increases in traffic and increased data processing requirements in the pre-1990 time period. Eventually the 9020s and their associated systems will have to be replaced to realize advanced system concepts, some of which are currently in the feasibility study stage, and to reduce O&M costs.

There are at least three views as to what might happen in the 1985-1990 period.

1. All or almost all of the 9020s will still be in operation, but a plan will begin to be effected to replace the 9020 during the late 1980's or early 1990's by a yet to be defined system. That system could initially perform the same basic functions as the 9020 but would have great potential for increased capacity and reliability. Before this replacement is initiated the 9020's would have been augmented on an ad hoc basis to absorb traffic increases and accommodate a limited number of system enhancements.

2. The 9020s will be phasing out during the 1985-1990 period as part of a long-term augmentation/phase-out program. This option differs from 1. above in that augmentation is done within the context of a long range plan, while in 1. above, the augmentation would be done

on a piecemeal basis to meet near term needs. This long term plan would, as in 1. above, attempt to fix the technology and specify in some detail the functional requirements of computer systems in the post 1990 era.

3. Recognizing the need for new but undefined capabilities as well as the inevitability of technological changes that cannot be forecasted with accuracy, the 9020 would be augmented during the pre-1990 period to accommodate all desired enhancements within the context of a yet to be defined system architecture that permits new systems hardware and automation features to be added on an as-needed basis by interfacing with a common data base. The 9020 would gradually perform fewer functions as evolutionary system improvements are made. This alternative differs from 1 and 2 above in that the 9020 replacement system is required to permit the maximum flexibility in the use of as yet to be defined technological advantages and stresses the need to not limit the availability of interim system enhancements.

There is a diversity of opinion as to which one of the above alternatives is most likely to be followed. Some of the arguments that have been heard in support of each alternative are presented below:

1. <u>9020 replacement starting in the 1985 to 1990 period after ad hoc interim augmentation</u>: The arguments that have been heard for this alternative include the following:

a. The FAA does not today have any specific plans for replacing the 9020s.

b. The time required to develop a coordinated plan, obtain the necessary funds, and implement a program to replace the 9020s would extend well into the 1985-1990 time frame -- or beyond.

c. It is likely that the 9020s can be made to accommodate the minimal requirements through that period since:

- Traffic demands are not likely to increase as rapidly as forecast.

- AAF, through a number of ongoing studies, should be able to make more efficient use of the 9020s and provide more capacity for accommodating new automated functions.

- New automated functions likely to be needed prior to the 1990s can probably be accommodated by the 9020s, augmented as necessary to provide the additional data storage and data processing capability.

d. Reliability and maintainability should not be a major problem.

e. Data processing technology is changing so rapidly that decisions on replacing the 9020s should permit a long period of assessment and specification development to assure that the best possible technological alternatives are selected for the 9020 replacement system.

Underlying this argument is the belief that the replacement system will commit the FAA to a specific technology for at least 20 years in the post 1990 era.

f. There is no benefit in trying to force the interim 9020 augmentation to be compatible with longer term plans because of the irreconcilable differences between the current system structures available for near term augmentation and the advanced system structures desired for the replacement system.

2. 9020s replacement starting in the 1985-1990 time period that is compatible with planned interim improvements: The arguments heard in favor of this alternative are also based on the assumption that the 9020s will be in use for several more years -- perhaps through the 1980s -- but that the FAA should develop a definite course of action for a gradual phase out. The gradual phase out plan would require an augmentation of the 9020s to be done in accordance with a specific plan to use whatever new hardware and software are produced as part of the future system. The argument is that unless this is done, the augmentation programs may result in a proliferation of ancillary hardware and software that not only is not in consonance with long term objectives but may, in fact, make it more difficult to achieve the longer range goals. An inherent element of this argument is that automation concepts based on currently available technology are sufficient for foreseeable en route automation requirements. One possible approach to following this alternative with respect to the 9020 CCCs is discussed in Metrek MTR-7589, "Distributed Processing Techniques for En Route Air Traffic Control."

3. 9020 replacement accomplished via introduction of system architecture that permits maximum flexibility in accommodating new ATC concepts and technological advances: So far, no arguments have been heard that the en route facilities will have to be replaced because of acceptance of new ATC concepts. That argument might, however, be raised by those that advocate the delegation of more ATC responsibility to the pilot and lesser dependence on ATC service from ground facilities. This argument is not likely to be a serious one with respect to the delivery of ATC services in the 1985-1990 period, but the choices made for an automation capability to be realized at this time might foreclose desirable options for the post 1990 time period. Proponents of this view stress that it is not possible to predict with any reliability the major technological innovations in computer hardware and software that are likely to be made available in the future. Further, there is a strong implication that any firm commitments made to specific detailed system designs would foreclose the full use of these technical innovations. There is also a recognition that there will be an ongoing need to expand the services provided by automation and the adoption of these enhancements should not be precluded by an inflexible design. The solution to this problem is seen as instituting an architecture that centers on a common data base coupled to independent functional elements via simple interfaces. The interface would be required to be adaptable to the widest possible variety of software and hardware alternatives.

A system architecture based on this approach would have as a major objective the elimination of the built-in

obsolescence that is a characteristic of the previously described approaches. This obsolescence cycle begins by firmly specifying a system based on today's technology, having the first system operational after the required 8-10 year development, procurement and implementation cycle, and then after 10 years of use having a system that is based on a limited 20 year old technology. The unacceptability of this cycle is based on the judgement that the next 20 years will see technology advances equal in impact to those experienced over the past 20 years and that the need for en route automation will continue to expand in large increments.

A number of studies have been proposed to assess the need for enhancements to the 9020's capabilities and other related questions. AED and ATF are currently putting together a coordinated study to determine a preferred course of action to replace the 9020. This study would address the requirements for the 9020 as well as ARTS III replacement systems and explore the critical technical characteristics of interest including centralized versus distributed processing, programming languages, hardware and software reliability features, common hardware and software, and common displays. These operational requirements and technical background documents would form the basis for the procurement of new computer systems that would take full advantage of state-of-the art computer system technology.

ATF has also initiated a study to explore interim improvements in the 9020s. This work is being done to explore ways in which reliability improvements can be added to the 9020 systems.

ASP has initiated a contracted work effort for the "development of cost data related to the NAS automation equipment." That cost data is expected to serve as an input to studies on NAS data processing requirements. It includes terminal area facilities (TIPS and ARTS III) as well as en route facilities.

OPEN ITEM 10: MLS/ILS/M&S Compatibility

THE ASSUMPTION:

Metering and Spacing algorithms will be refined/modified for use at those locations where it is operationally desirable to accommodate the concurrent use of the conventional straight-in approaches that are flown with guidance by the current Instrument Landing System (ILS) and the more flexible approach geometries that may be flown with guidance by the Microwave Landing System (MLS).

THE OPEN QUESTION:

Should planning be undertaken to determine the specific airspace procedures and Metering and Spacing design features that are required to permit the concurrent use of the flexible approaches (possibly curved or segmented) permitted by the Microwave Landing System and the conventional straight-in approaches required by the current Instrument Landing System?

THE SITUATION:

During the past year, the FAA's MLS program has demonstrated the ability of the Time Reference Scanning Beam MLS to provide curved approaches at a number of international airports with the use of a NASA test aircraft. Although it is generally conceded that routine use of curved approaches by conventional aircraft at major air carrier airports is some time in the future, it is also apparent that there will be a long period of ILS and MLS coexistence. In order to ultimately achieve the noise exposure and airspace design flexibility advantages made possible by the MLS curved

approach, it will be necessary to plan for an interim period when approaches with either ILS or MLS will be provided to properly equipped users. The FAA will need to assess the design requirements for advanced versions of M&S as well as the approach airspace geometries that will permit the close-in merging of arriving flights on separate paths. The close-in merging must be achieved without requiring large increases in the longitudinal spacing buffers between successive aircraft in order to minimize losses in runway capacity.

OPEN ITEM 11: DARC/ETABS/CCC Interface

THE ASSUMPTION:

The Direct Access Radar Channel (DARC) and Electronic Tabular Display Subsystem (ETABS) will have the ability to exchange data that is sufficient to permit effective stand-alone operation in the event that either the ARTCC's Central Computer Complex (CCC) and/or the Data Entry and Display Subsystem (DEDS) is not available.

THE OPEN QUESTION:

Should the designs of DARC and ETABS be altered in order to provide an integrated capability as backup to the CCC and DEDS?

THE SITUATION:

DARC is currently being procured and ETABS is currently under development. Each interfaces with an ARTCC's CCC. Each would be capable of providing information to controllers when the CCC and/or the Data Entry and Display Subsystem is not available.

DARC is being built and tested under the direction of AAF. The program is far advanced, and implementation at the first site, Salt Lake City, is scheduled for mid-1979. DARC is designed to receive messages from the CCC. Its ability to send messages to the CCC is very limited at this point. No interface with ETABS is planned.

ETABS is being developed under the direction of ARD-100. The program is in an early stage of development. The specifications for the engineering model have been distributed. SRDS

hopes to sign a contract for the engineering model in early 1979. Implementation at the first operational site is tentatively scheduled for 1985. ETABS is being designed to send to and receive information from the CCC. Exchange of information with DARC is included in the ETABS preliminary design, but the DARC program does not include provisions for such an exchange.

DARC

DARC (Direct Access Radar Channel) is a backup capability designed to be used when the normal radar display capability is not available. DARC will aid controllers by providing radar displays and limited data entry capabilities for display-related data. When DARC becomes operational, both the normal NAS Stage A equipment and DARC will process this data for display. Normally, the Radar Position Consoles will receive the resultant display data through the normal equipment (CCC and DEDS). DEDS consists of a Computer Display Channel or Display Channel Complex, and other input/output related equipment. In case of failure of either the CCC or DEDS, the consoles will be manually switched to receive their data through DARC.

DARC will provide each radar position with single site radar coverage from the radar site that best covers the sector area that position controls. The data that will be available for display includes:

- data blocks.
- search target positions and histories.
- beacon target positions and histories.

- radar weather data displays.

- geographic map data displays.

Depending upon the availability of the data for particular aircraft, data blocks can contain various combinations of:

- Aircraft Identification.

- Assigned Altitude.

- Mode C Reported Altitude.

- Mode 3/A (Identification) Beacon Code (discrete or non-discrete).

Many of the capabilities provided by the CCC and DEDS will not be provided by DARC:

- radar data mosaicked from multiple radar sites.

- automatic tracking.

- data blocks for non-beacon (search radar) target returns.

- tabular displays (departure, hold, and inbound lists) on the PVDs.

- Minimum Safe Altitude Warnings.

- Conflict Alert Warnings.

- Conflict Resolution Advisories.

ETABS

ETABS (Electronic Tabular Display Subsystem) would replace the Flight Strip Printers, Computer Entry Devices, and Computer Readout Devices currently located at ARTCC sector positions. The principal effect of the implementation of ETABS would be the elimination of flight progress strips. However, ETABS would also provide:

- improvements in controllers' entry and control of flight data.
- better and more timely information (flight data and other) for controllers.
- a processing capability that would support sector operations when the CCC is not operational.

The subsystem would provide tabular display devices for the output of information, and alphanumeric keyboards and touch entry devices (on displays) for the input of information. These would be connected to ETABS processors that would interface with the CCC. Portions of the ETABS sector displays would have interactive capabilities through touch-actuated equipment that overlay displays. Formats of displayed data would be designed so that appropriate portions of the data would be located at touch entry points. By touching these points, the controller would be able to accomplish most of the needed actions and data entries without using the keyboard.

DARC/ETABS Integration

When the CCC and/or DEDS is not available, DARC and ETABS would be able to function independently and provide valuable information

to controllers. The present DARC design does not attempt to integrate its functions with those of ETABS in order to provide an integrated (though degraded) capability for use by controllers. The ETABS design does try to provide such an integrated capability, but in a very limited way. It is limited in part because the current ETABS design is for an engineering model--a model that does not need to demonstrate many capabilities that are external to it.

Some DARC/ETABS integration capabilities that might be desirable when the CCC is unavailable to radar consoles are listed below:

- ETABS could assign unused discrete beacon codes to aircraft.

- ETABS could transmit Aircraft Identifications, Assigned Altitudes, and controller-entered Reported Altitudes that are paired with the newly assigned discrete beacon codes.

- For aircraft with discrete beacon codes, DARC could send ETABS Mode C altitudes that it has received. ETABS could then process and display such information.

- When a flight plan is cancelled, ETABS could transmit the cancellation information to DARC so that the DARC data base could be kept up-to-date.

- When an Initiate or Accept Handoff action is entered at a sector position, the handoff information could be transmitted to DARC.

The items listed above are meant only to provide a few examples of possible integration between ETABS and DARC. A comprehensive

study of possible integration of functions has not been made. It is probable that there are many other ways in which the capabilities of ETABS and DARC, and possibly other equipments, could be used in order to provide better, more useful information and to aid to controllers when it is necessary to bypass the CCC and/or the DEDS.

ETABS development plans currently include an unassigned data exchange capability that could be used for a DARC/ETABS interface, although the nature of this interface is currently undefined. The specific data exchange requirement and the adequacy of this preliminary hardware interface is a candidate activity for testing with the ETABS engineering model.

Preliminary planning for enhancements to the initial DARC capabilities is currently being considered by the Air Traffic Service. The initial thinking includes improvements to the DARC interface with the CCC and additional DARC capabilities, such as automatic tracking and mosaicked radar data. This activity may present an opportunity to develop a more integrated DARC/ETABS interface.

OPEN ITEM 12: Terminal/Tower Display and Integration of E&D Products

THE ASSUMPTION:

1. The existing terminal displays for visibility, ceiling, wind, barometric pressure, time, vortex advisories, wind shear, and the status and control monitors for airport communication, navigation, and surveillance systems located in TRACONS and Tower Cabs will be integrated into an operationally efficient design that uses hardware that also incorporates a remote maintenance and monitoring process capability.

2. Subsequent to the above system improvement, the controller interface equipment located in Tower Cabs at major airports will be sufficiently integrated with proposed new systems to permit an operationally efficient installation of a full complement of new equipment including TIPS, ASDE-3, TAGS, Wake Vortex Avoidance Systems, and Advanced Wind Shear Detection Systems.

THE OPEN QUESTIONS:

There are several E&D programs aimed at developing new systems to be located in Tower Cabs to assist tower personnel in carrying out their ATC duties. There are at least three questions that need to be answered:

1. Will it be physically possible to install all the new equipment in the existing Tower Cabs?

2. If it is physically possible to install each new item, will the physical layout provide for efficient operations?

3. Would it be possible to integrate certain components such as displays, input/output devices, and data processors to improve operations and to facilitate physical installation?

THE SITUATION:

For some time, it has been recognized by the FAA that the interface/integration of new facilities for Tower Cabs is an area that deserves attention. When the System Description Task was initiated, one TSC/SRDS group was working on ASDE-3 and TAGS for airport surveillance. TAGS (at that time) was to include a digitized alphanumeric display of aircraft tracks during the last few miles of the approach and the first few miles of the departure as well as the air traffic movement on the surface of the airport. Another TSC/SRDS group was working on VAS/WVAS that would display wake vortex related information. Another TSC/SRDS group was working on a wind shear program that would provide wind shear data. It appeared that the same type of sensors might be used to sense both the wake vortex and wind shear phenomena. In addition, SRDS was working on the TIPS system to present tower and TRACON controllers with flight plan information.

Currently, the TAGS program has been revised to eliminate the surveillance and display of airborne traffic near the airfield, so the possibility of the duplication of the display of airborne aircraft via ARTS-III and TAGS is no longer a factor. But, there is also some concern that the TAGS design objectives are now too limited and that the requirement for TAGS surveillance of the airspace near the airport should be reinstated.

All of the programs named above are, however, still underway and will be producing equipment to be installed in the limited confines of the Tower Cabs. At the larger airports, the first series of equipment is likely to include ASDE-3, TIPS, VAS, and wind shear displays. Later on, TAGS may replace or supplement ASDE-3 at a few high activity airports, and WVAS may supplement or replace VAS. Still later, it may be desirable to present the local controllers with an improved display of separation distances between aircraft on final approach in order to start operating at the reduced spacings possible under certain WVAS conditions. Thus, the installation and integration of Tower Cab improvements is still a subject worthy of investigation. TSC has recently completed a preliminary study undertaken at OSEM/SRDS request.

The basic TSC task was to study ways in which the full spectrum of current and future Tower Cab systems could be installed in such a way that there was a maximum operational benefit and a minimum unnecessary overlap in system capabilities. The task was subsequently subdivided into studies of sensor integration, equipment station/display integration, data processing integration, and idealized work place design.

Specific items addressed in the study include:

Shared BRITE/ASDE/TAGS displays. Potential use of ceiling mounted repeaters.

Integrated keyboard and console controls.

Integrated TAGS and VAS sensor installations.

Integrated TIPS/TAGS/VAS/wind shear/meteorological data processing.

The final report of the TSC study indicates that additional design work is warranted to further study this integration questions.

Another effort, a joint AAF/SRDS study, was initiated by AAF in early 1978 to address the integration of some of the Tower and TRACON displays expected to be in place in the Near Term. A system was envisioned which would integrate the air traffic control tower cab and TRACON subsystems and displays with the maintenance functions associated with these subsystems. The study is to address three primary areas:

Vortex Advisory System/Low Level Wind Shear Advisory System Integration.

Tower CAB/TRACON display integration.

Remote Maintenance Monitor System (RMMS) functions for airport navigation, surveillance and communication systems.

The ARTS III hardware and displays as well as future systems such as TIPS and WVAS were specifically excluded from consideration. The RMMS aspects of this task are described in Open Item 20.

The initial work on this multi-year project is being done at NAFEC and TSC and is still in the conceptual stage. Contractor support will be used for some of the later phases. The final objective is to have two production systems installed at operational locations by early 1982.

OPEN ITEM 13: ATCSCC-NADIN Interface

THE ASSUMPTION:

The communication services provided to the Central Flow Control function of the ATCSCC by NADIN will be at least as operationally effective as the pre-NADIN dedicated Central Flow Control communication set-up.

THE OPEN QUESTION:

Will the NADIN Program provide the communications required to support the central flow control function in the ATCSCC?

THE SITUATION:

The central flow control communications planned for the pre-NADIN era call for five dedicated 2400 bps full duplex data channels between the central flow control computer at Jacksonville and five of the ARTCCs serving the higher density terminals. There will be two dedicated 4800 bps full duplex data channels between the Jacksonville computer and the ATCSCC in Washington, D.C. (see Figure 1a).

The central flow control communications obtained in the NADIN II program will reduce the capacity of the communications between the ARTCCs and the Jacksonville computer and between the Jacksonville computer and the ATCSCC as shown in Figure 1b. Based on the above, it appears that the NADIN communications as currently planned may not be able to satisfy the communication requirements of the central flow control function. Prior to NADIN implementation, the sufficiency of the planned communication links should be assessed and contingency plans for adding capacity, if warranted, should be developed. One such contingency plan could include an increase in the capacity of the NADIN II communication links.

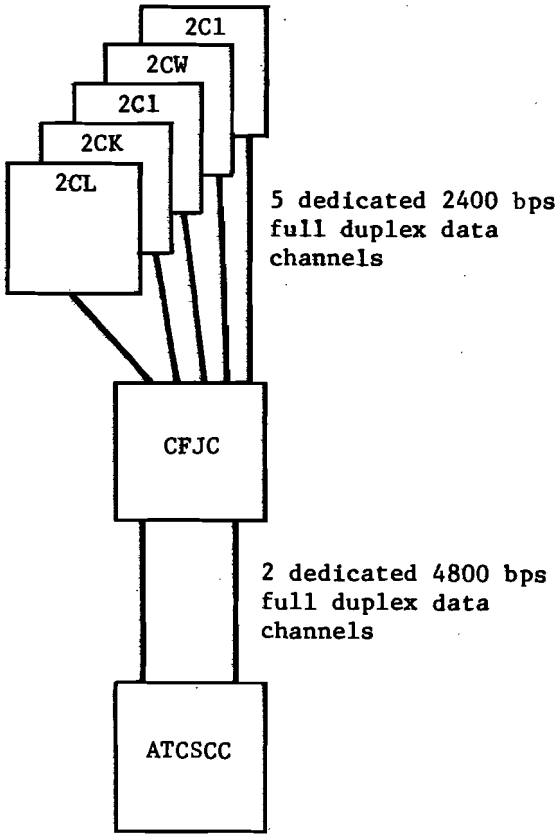

CURRENT
CENTRAL FLOW CONTROL COMMUNICATIONS
FIGURE 1a

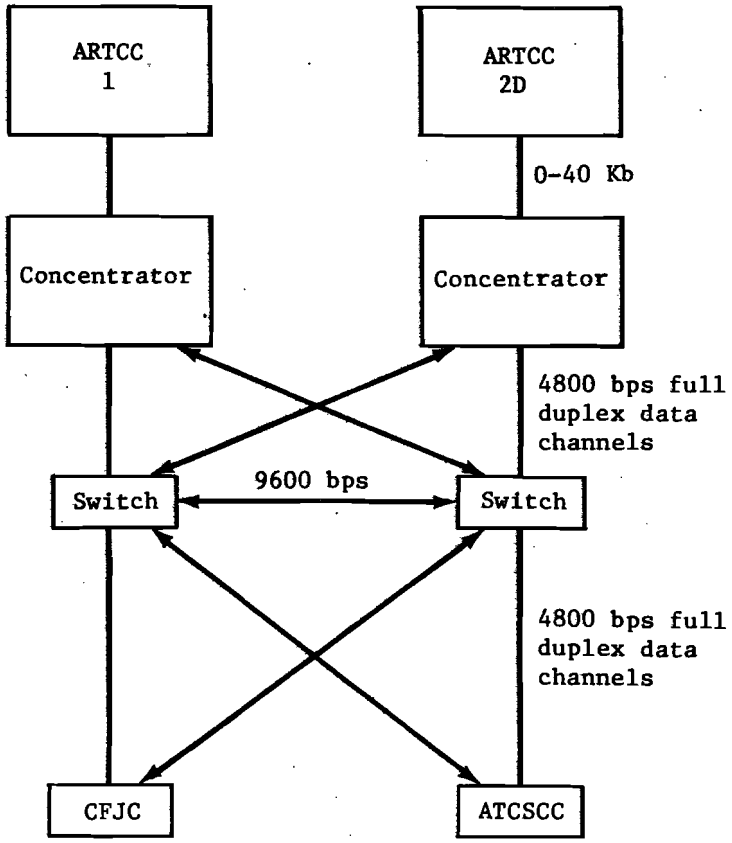

NEAR TERM
CENTRAL FLOW CONTROL COMMUNICATIONS (NADIN II)
FIGURE 1b

FIGURE A-1
COMPARISON OF CURRENT AND NEAR TERM
CENTRAL FLOW CONTROL COMMUNICATIONS

OPEN ITEM 14: Upgrading Terminal Area ATC Facilities (ARTS IIIA, ARTS III, ARTS II, TPX-42)

THE ASSUMPTION:

1. The ARTS III will remain as the primary automation capability at major airports (current ARTS III locations) and will be adequate, with the addition of the ARTS IIIA packages and possibly some augmentation with special purpose computers, to accommodate projected increases in traffic and a full spectrum of ATC improvements including Terminal Metering and Spacing, Terminal Conflict Alert, Terminal Conflict Resolution, Digitized Weather Data, and DABS Data Link.

2. The ARTS II systems will remain as the primary automation capability at the intermediate activity airports currently receiving ARTS II systems. In the absence of specific FAA plans to enhance these systems with improvements such as conflict alert and MSAW, it was assumed that the ARTS II would not be extended beyond the basic capability currently being implemented.

3. The TPX-42 systems at low activity TRACONs and TRACABs will be replaced by either ARTS II or programmable TPX-42 systems in the Far Term (post 1982) time period. Prior to replacement, a limited terrain proximity monitoring function, Low Altitude Alerting System (LAAS), will be implemented.

THE OPEN QUESTION:

Should the FAA develop an integrated plan for upgrading the automation capabilities of high, medium, and low activity radar approach control facilities?

THE SITUATION:

Information presented to the System Definition/Interface team indicated that the FAA's thinking for enhancing the current ARTS III, ARTS II, and TPX-42 systems are proceeding along essentially independent paths. There may be some advantages in terms of maintenance, training, logistics, controller flexibility, and quality of ATC service by developing a more comprehensive approach to providing future terminal automation services.

ARTS III--63 Operational Sites

Over the 1979 and 1980 time period, 27 of the larger ARTS III locations will receive the ARTS IIIA enhancement package. The FAA is also at present negotiating this set of enhancements for the remaining ARTS III locations as a follow-on effort. The adequacy of ARTS IIIA to support a sophisticated terminal conflict alert function that examines search radar as well as beacon targets for potential conflicts and to support a full Metering and Spacing function that treats arrivals, departures, and multiple runway operations is a subject of concern to the FAA. There has been some discussion that the ARTS design, which is based on mid-60's technology, should be replaced by a more modern and capable design in order to meet anticipated requirements. FAA planning for enhancements beyond ARTS IIIA is indefinite at this time.

ARTS II--73 Operational Sites

Over the late 1978 to 1980 time period, 50 TRACONs and 23 TRACABs will receive the ARTS II system. This system will provide a limited display of alphanumeric target data (beacon code, flight identity, and Mode C altitude), for beacon equipped aircraft. The basic system is programmable and is a candidate for

a number of enhancements including beacon tracking, low altitude alerting, conflict alert, etc. The desirability of some of these enhancements have been recognized by the FAA's operating services and preliminary discussions have been held with E&D representatives on the need for an ARTS II enhancement program. It is generally recognized that enhancing the ARTS II system may require extensive modification or replacement of the original ARTS II processor and possibly the display. The desirability of upgrading the TRACON/Tower displays at ARTS II and TPX-42 sites in order to take full advantage of improvements in the detection, processing, and transmission of aircraft and weather surveillance data are discussed in Open Item 17.

TPX-42--39 Operational Sites

At the present time, 11 TRACONs and 28 TRACABs have TPX-42 installations. This system provides for the alphanumeric display of the beacon code and Mode C altitudes of beacon equipped aircraft. This system is not programmable and would have to be modified considerably to add new functions. ATF has set aside F&E funds in FY80 to replace the TPX-42. Prior to replacement, the inclusion of a Low Altitude Alerting System (LAAS) is expected to be added to the existing TPX-42 hardware. The two major candidates for replacing the existing TPX-42 are a programmable version of the TPX-42 developed for DOD and the ARTS II. The preferred approach is expected to be selected by ATF in 1978. One of the tradeoffs to be examined is the benefit of compatibility with existing TPX-42 units obtained by adoption of the programmable TPX-42 versus the benefits of standardization obtained by adoption of the ARTS II.

POSSIBLE ALTERNATIVES

Several approaches to upgrading terminal automation hardware are possible. One approach involves upgrading the terminal area ATC facilities from the top down by replacing the more sophisticated ARTS IIIA with new facilities and upgrading the less sophisticated systems through such measures as using excess ARTS IIIA equipment to upgrade ARTS III equipment and then using excess ARTS III equipment to replace ARTS II equipments. A second alternative would be to upgrade the terminal facilities by replacing or augmenting facilities at each location with new equipment selected on a site-by-site basis. A third alternative would be to develop a plan for a gradual upgrading/replacement program so that there would be more commonality among hardware (particulary displays) and software in the future regardless of the level of automation involved.

Some of the considerations involved in comparing these approaches are:

1. Utilization of advanced technology in the processing and display areas versus perpetrating higher cost/less capable systems based on the ARTS III mid-60's technology.

2. Acquisition of additional new ARTS III equipment for new sites may be difficult (impossible) to justify on a cost and performance basis.

3. Large expansions of the limited capabilities of the ARTS II systems other than certain reliability and maintenance improvements may not be technically/economically feasible or operationally desirable.

4. Expansion possibilities of the existing TPX-42 system are negligible due to display limitations and the absence of processing. The programmable TPX-42 is not purely an evolutionary improvement as it requires a new display as well as incorporation of a computer.

These questions are candidates for the joint AED/ATF advanced automation study described in Open Item 9.

OPEN ITEM 15: Voice Communications Planning

THE ASSUMPTION:

1. Air-ground-air communication for the ARTCCs and major terminals will be upgraded in the post-1982 time period by implementation of the radio portion of VSCS, which would be referred to as RCCS. In the Near Term, RCAG tone control equipment for the ARTCCs will be replaced, possibly with a modular subsystem that would be compatible with longer term RCCS/VSCS designs. The FSSs, which are assumed to remain unconsolidated, will continue to use switching and control equipment based on existing designs. In addition, the transmitters, receivers, and antenna systems at all FAA ground sites will be replaced with modern design equipment.

2. Ground-ground communications would be modernized by the implementation of ground-ground portions of the VSCS system which would replace the WECO 300 system at ARTCCs, and the WECO 301 system at the larger terminals. The existing small key systems and call distributors at FSSs would remain in place.

3. At some smaller terminals a Small Voice Switching System (SVSS) will be implemented, which will provide an integrated radio and ground voice communications capability.

THE OPEN QUESTION:

1. Should the FAA design and implement a single voice communications switching system for ground-ground interphone/intercom switching and control and air-ground-air radio keying and control?

2. Is one system design suitable for all FAA environments (ARTCC, Tower/TRACON and FSS)?

3. Will current AAF requests to procure early improvements in the radio area result in a large investment in throw away equipment when a new radio voice communication system is implemented?

4. Can AAF plans to procure interim radio communications equipment be delayed until a comprehensive modernization program is developed, approved, and initiated?

5. Can a voice communication system program be planned to expedite improvements in critical areas by designing the system with modular components which can replace problem elements of the present system (e.g., tone control equipment replacement)?

THE SITUATION

Preliminary submissions prepared for the FAA's System Acquisition Management process calls for a series of interim communications improvements to be followed by more extensive integrated overall system improvements. Interim improvements, including the modernization/replacement of UHF/VHF transmitters, receivers, and antennas, are currently being accomplished. Other interim improvements such as the replacement of switching equipment at smaller Towers/TRACONs are being planned.

The integrated far term system improvement proposed in the submission is referred to as the Voice Switching Control System (VSCS). The VSCS is planned to be a combined air-ground-air and ground-ground voice switching and control system for use in ARTCCs, Towers/TRACONs and FSSs. It will replace the FAA radio control equipment and the leased WECO 300 and 301 switching system and leased small

key systems and call distributors. The system would also have provisions for remote maintenance and monitoring functions.

As an alternative to the integrated VSCS, a modernization program that would be restricted to independent air-ground-air and ground-ground portions of voice communications has been previously investigated. The air-ground-air portion of this system is referred to as a Radio Communication Control System (RRCS). This independent RCCS is planned to be a stored program controlled air-ground-air radio control and switching system for use in ARTCCs, Towers/TRACONs, and FSSs. It would incorporate flexible reconfiguration capability under automatic control and would contain advanced technical control features. The RCCS would replace the existing FAA owned and maintained electro-mechanical radio control equipment. This system would also have provisions for remote maintenance and monitoring functions.

The FAA is currently evaluating both the integrated VSCS and the independent ground-ground and air-ground-air design concepts. Some of the factors included in this evaluation are implementation flexibility, technical risk and feasibility, costs vs benefits, and logistics. The Radio Communication Control System of the independent concept may have lower technical risk, but the potential for long term cost reduction through the VSCS concept appears attractive. Other questions that will be addressed in this evaluation include:

- Are there significant development, procurement, and operating cost advantages in a VSCS versus a system based on an independent RCCS plus a separate modernized ground-ground voice system?

- Can a high level of commonality of hardware and software be provided in a VSCS which can offer significant benefits (e.g. logistics) over an uncombined system?

- Should RCCS and VSCS include contingency provisions to serve the FSS system in both consolidated and unconsolidated configurations? An FAA decision on whether or not the existing extensive networks of FSS outlets should be consolidated into 20 major Hub locations is not expected before the early 1980s.

- What problems are involved in replacing a leased ground-ground system with a purchased system?

- Are requirements for the various FAA facilities such as ARTCCs, TRACONs, Towers, and FSSs, similar enough to permit one system design for all facilities?

- Will the RMMS under development by AAF be compatible with concepts for remote maintenance and monitoring in an RCCS or VSCS?

- Can the AAF requirement to develop an RMMS be integrated into an RCCS (or VSCS) program?

OPEN ITEM 16: FSS Modernization and NADIN Communication Schedule Compatibility

THE ASSUMPTIONS:

1. Implementation of NADIN I will begin in early 1981 and will not be operational in time to initially provide the expanded data communications capability required for the Model 1 FSS improvements that will also be implemented starting in early 1981. Interim data communication capability for FSS Model 1 will be provided by the Area B (ABDIS) and Service A networks, with NADIN I eventually replacing Area B.

2. Implementation of NADIN II will begin in early 1982 and will be operational in time to provide the additional expansion of the data communication capability that is needed to support Model 2 FSS improvements that will begin implementation in early 1983.

3. Implementation of NADIN III will begin in late 1982 and will be operational in time to provide the added data communication features needed to support the FSS Aviation Weather Processor that will become operational in early 1983.

THE OPEN QUESTIONS:

1. Should the implementation schedules of NADIN I and FSS Model 1 be brought into closer alignment, either by tightening the NADIN I schedule or by relaxing the FSS program schedule, in order to eliminate the use of temporary communications?

2. Will later FSS and NADIN improvements be implemented on a schedule that permits the FSSs expanding communication requirements to be met by NADIN II and NADIN III?

THE SITUATION:

A review of the schedules for the NADIN and FSS modernization projects has shown that the planning schedules for some projects are far more optimistic than those for other projects.

NADIN

The NADIN project had an approved specification in January of 1977 and the RFP was written by February of 1977. TSARC approval to advertise for bids was granted in June 1978; however, the RFP will not be issued until late 1978. Additional TSARC approvals may be required for the NADIN II and NADIN III systems after an R&D effort has provided additional definition of their scope.

FSS

The FSS Model 1 hardware and software functional specification was approved by TSARC in February 1978. The Phase I RFP was issued in June 1978. Model 1 development and Model 2 design verification will occur in Phase I. A Phase II contract will result in Model 1 implementation and Model 2 development and implementation. Acquisition of Model 2 and the Aviation Weather Processor will require additional TSARC approvals.

Despite the fact that the early actions for NADIN occurred almost a year prior to those for the FSS Model 1, the planning calls for the first FSS Model 1 facilities to be operational by early 1981, well before the NADIN I completion date of late 1981. Since the planned FSS operational date is earlier than NADIN I, temporary communications have to be provided.

NADIN I and FSS Model projects are based on the assumed use of presently available hardware and programming structures to fulfill their respective system requirements. Thus, it may be feasible to bring these schedules into closer alignment, either by tightening the NADIN I schedule or by relaxing the FSS program schedule. The result could be a cost saving resulting from the elimination of the temporary communication facilities.

The implementation schedules assumed in this document indicate that the implementation of subsequent NADIN and FSS improvements will occur in the proper sequence to satisfy the FSSs expanding communication requirements. However, these schedules must be viewed as extremely tentative due to the uncertainty of some technical developments, the very short implementation intervals assumed for NADIN I, II, and III, and the time consuming TSARC approval process. Contingency plans for operation of further FSS enhancements have not yet been made in the event that required NADIN II and NADIN III communications are not available. Careful attention to retaining the required NADIN and FSS schedule phasing would seem to be in order to avoid the costly use of interim communication approaches.

OPEN ITEM 17: Display of Digitized Surveillance Data at TRACONs and Towers

THE ASSUMPTION:

1. ASRs will be modified in the early 1980's to include an ASR weather channel for weather detection and processing and a Moving Target Detector for enhanced aircraft detection. This means that weather and aircraft surveillance information will be in the form of digitized data.

2. All-digital displays will be available at ARTS III sites on a schedule that is compatible with displaying the digitized weather and aircraft data starting in the early 1980's.

3. No expansion of the digital display capability at the ARTS II and TPX-42 locations will be available.

THE OPEN QUESTION:

1. Should additional FAA action be initiated to provide for an expanded digital display capability at ARTS III TRACONs/ Towers in order for the display systems to be in place in time to use the digitized surveillance data expected to be available starting in 1982?

2. Should plans be developed for providing enhanced digital display capabilities at lower activity TRACONs/TRACABs (ARTS II, TPX-42)? The availability of digitized weather and aircraft surveillance data at these locations would depend on the extent to which the FAA implements surveillance improvements such as MTD and the ASR weather channel.

3. Is there merit in developing a common en route and terminal display?

THE SITUATION

Information available to the System Description Team indicated that the FAA has a number of programs planned or underway that address digital Tower/TRACON display systems. These systems are primarily considered in relation to ARTS III systems and include the Full Digital ARTS Display (FDAD), the Tower Cab Digital Display (TCDD), and a number of other experimental systems.

The FDAD is an experimental system being investigated by SRDS and is planned to have both an all-digital and a mixed digital/broadband mode. The TCDD is an all-digital display for use in high ambient light conditions and is being examined by SRDS as a replacement for the current raster scan type BRITE displays being used in Tower Cabs and TRACABs. SRDS also has other display systems under study including an all-digital display that is part of the Tampa/Sarasota research and development activity. Specific proposals to interface these displays with the improvements expected in terminal surveillance systems have yet to be developed.

Plans for an expanded digital capability at ARTS II and TPX-42 locations have yet to be made by the FAA. Some of the development work on ARTS III associated displays may be pertinent. However, there are significant design differences among the ARTS III, ARTS II, and TPX-42 displays and their associated interfaces which would limit wide-spread applicability of the ARTS III display efforts.

The FAA operating services have recognized the potential benefits of a common display for en route and terminal. The possible benefits include reductions in logistics, training, and procurement costs.

OPEN ITEM 18: Detection of Turbulence and Low Level Wind Shear

This topic is in essence a recap of those portions of Open Items 5 and 6 on en route and terminal area surveillance concerned with the detection of turbulence and low level wind shear. The purpose in preparing a separate topic paper is to present a consolidated picture of just the weather detection situation to those interested in that special subject.

THE ASSUMPTIONS:

1. No major improvements will be made in the detection of hazardous weather in the Near Term ATC system configuration (i.e., no major improvements implemented prior to 1982 with the exception of the Low Level Wind Shear Alert System (LLWSAS)).

2. The first major improvement will start to be implemented in the early part of the Far Term system (1984). The first major improvement will be achieved by modifying both the ARSRs and the ASRs to include what is referred to as a separate weather channel. The separate weather channel is likely to include an MTD capability for the special processing of the returns from precipitation to indicate areas of heavy precipitation. In order to achieve this capability, all ARSRs and ASRs will be modified or replaced. In the case of both the ARSRs and the ASRs, the weather data will be two dimensional (range and azimuth).

3. The second major improvement will be realized by adding the 3D weather detection capability, i.e., range, azimuth, and altitude of turbulence and low level wind shear. For the en route system, the 3D capability will be realized through a joint FAA/NWS/AWS program to develop and implement a Joint Use Weather

Radar. For the terminal area system, the 3D capability will be realized either through a further modification to the ASRs to provide a 3D capability and/or through inputs from the Joint Use radars for those terminal areas where coverage from the Joint Use radars satisfy the terminal control requirements for detecting low level wind shear as well as turbulence.

4. The 3D weather detection system for the terminal area will include the capability of detecting and analyzing turbulence and wind shear in clear air as well as under conditions where precipitation is present.

THE OPEN QUESTIONS:

1. Would it be possible, and worthwhile, to make some earlier modifications to the ASRs and ARSRs to improve their weather detection capability as part of the Near Term ATC system configuration, i.e., prior to 1983?

2. Quantitatively, what incremental improvements in weather detection can be expected through the various weather detection improvement programs being considered for the L-band ARSRs? the S-band ASRs? Are those benefits of sufficient merit to justify the improvements assumed in the preceding Assumption section?

3. To what degree should the FAA development program be influenced by the tentative plans to undertake a joint FAA/NWS/AWS program to develop and implement a Joint Use Weather Radar?

4. Assuming that a joint FAA/NWS/AWS program is undertaken, to what degree would the performance and the coverage of such a radar network satisfy FAA weather surveillance requirements?

Conversely, what should the FAA be doing to develop, implement and maintain a weather detection/processing capability to supplement the Joint Use Weather Radar or to be used in place of the joint use radar if a joint use radar is not implemented?

5. Can the planned modifications to improve the weather surveillance capabilities of the ARSRs and the ASRs be phased with plans to improve their capabilities for aircraft surveillance and thus reduce overall costs including the costs of modifying the surveillance preprocessors and possible modifications in the control facilities?

6. If the need for the 3D capability in the terminal area remains a Far Term requirement, should development plans include developing a capability for the same radar to detect clear air turbulence and wind shear?

THE SITUATION:

Most of the open questions above are focused on uncertainties with respect to the specific program to be pursued by the FAA rather than the interface/integration questions that might be associated with a defined course of action to develop and procure specific systems.

Currently, the FAA (primarily AAF and ARD) is in the process of developing an official program plan to improve the Aviation Weather System, including the interface between the weather system and the associated ATC facilities. The preliminary versions of that plan include provisions for answering most, but not all, of the questions posed above. The plan also identifies a number of actions currently underway that will lead to decisions as to the modifications and new facilities that will be developed and/

or procured to improve the weather detection subsystems of the Aviation Weather System. The preliminary plan also shows that most of the FAA work currently underway is aimed at deciding what should be done rather than on the actual development of products that will be operationally useful. As a result, most of the programs to improve the weather detection and processing capabilities at the en route and terminal area surveillance sites must be viewed as still in the program definition phase. Due to uncertainty as to the specific programs to be pursued, the assumptions of the System Description Team with respect to the Near Term and Far Term ATC system configurations must be viewed as tenuous.

OPEN ITEM 19: Weather Data Dissemination

THE ASSUMPTION:

A Center Weather Service Unit (CWSU) will be implemented at each ARTCC and will receive, interpret, coordinate, and dispatch graphic and tabular weather data to controller operating positions within the ARTCC and in associated TRACONs. The distribution of weather data to controller positions will be accomplished by TIPS for Towers/TRACONs and will be accomplished by ETABS for ARTCCs. In light of incomplete FAA plans for accomplishing the distribution of graphical weather data to controller positions, the specific devices used for distribution were not designated in this document.

THE OPEN QUESTION:

1. What specific weather data should be made available to ARTCC and Tower/TRACON controller positions from the Center Weather Service Unit (CWSU)? What communication and display media should be used to provide the selected tabular and graphical weather data to the controller?

2. What is the best approach to interfacing the NWS's Automation of Field Operations and Services (AFOS) weather information processing capability with the FAA's ATC facilities?

THE SITUATION:

The April 1978 draft of the FAA Aviation Weather System Preliminary Program Plan discusses the open questions cited above as critical issues that must be resolved before the system described in their documentation can be developed. Each question is discussed briefly below.

CWSU Weather Data Dissemination

The CWSU planned for each of the ARTCCs is designed to serve as a major source of meteorologist interpreted weather data to the sector controllers within the ARTCC and to the controllers at TRACONs within the ARTCC's boundaries. At present there are CWSU-like installations at the Kansas City and Atlanta ARTCCs. Tabular data can be distributed within the ARTCC by using a small Computer Readout Device (CRD) located at the planning (D man) sector position. This display is limited to 20 lines of 25 characters per line. The Flight Strip Printer can also print out weather reports for selected locations. The distribution of data to TRACONs is accomplished by interphone and within the TRACON by electrowriters as well as interphone. Graphical data is reviewed in face-to-face briefings.

The draft Weather Plan calls for the examination of the use of the Terminal Information Processing System (TIPS) and the Electronic Tabular Display Subsystem (ETABS) for the distribution of tabular weather data to TRACONs and within ARTCCs, respectively. If these future systems are found to be inadequate, then a separate special subsystem that would automatically collect, process, distribute and display meteorological data is to be considered.

The options for displaying graphical weather products at the controller positions is much more limited. An SRDS sponsored study is being considered in FY 1979 that will examine ways in which the current ARTCC sector position PVDs can be used to display graphical weather intelligence. This proposed study would have as its objective the definition of technical approaches to display weather contours from National Weather Service Radars (WSR-57) and FAA radars (ARSR) with annotations

from the CWSU meterologist. The potential uses of color for display of weather data may also be examined as a part of this study.

Some of the areas that will be examined in the evaluation of alternative graphical and tabular weather data dissemination approaches include:

- What type of graphical as well as tabular data is useful in the direct planning of ATC clearances at the ARTCC and TRACON controller positions? Of particular interest is the usefulness of graphical 3D weather surveillance data that will be available from NWS or Joint Use Weather Radars?

- What type of data should the controller have available to forward to the pilot on an automatic or request basis?

- Is the design of the ETABS engineering model, which permits 2 lines of 80 characters each for weather related data, adequate for anticipated communications? What expansion is possible without degrading the ETABS primary flight data handling capability?

- Is the TIPS data communications capability between ARTCCs and TRACONs adequate to handle the anticipated volume of weather data in a timely manner?

AFOS Interface

The National Weather Service's AFOS is an integrated weather data collection, distribution and display system that is

expected to be operational at over 200 NWS facilities by the early 1980s. The ATCSCC and each ARTCC would have operational AFOS positions within their facilities and the FSSs would have access to AFOS data via the Aviation Weather Processor (AWP). The key question is how many distinct interface points need to be established between the AFOS data network and the cited FAA facilities. The AFOS National Distribution Circuit is, in effect, a national weather data bus with all civil and most military weather data for the U.S. on it. Thus, any connection to this bus will permit a complete set of weather data to be accessed. Individual interfaces (more than 40) could be established to permit timely access to data and to limit the undesirable effect of single point failures.

Some of the areas that will be considered in this evaluation are:

- Cost savings of common NWS and FAA communication systems.

- Availability and use of NADIN data communications improvements.

- Growth potential of the communication media to provide enhanced graphical as well as tabular products.

- Requirements for common NWS and FAA data types, data formats, and communication protocol.

OPEN ITEM 20: Remote Maintenance and Monitoring

THE ASSUMPTIONS:

1. Integrated remote maintenance and monitoring functions will be incorporated into the RCAG, en route surveillance, VORTAC and airport facilities for navigation, communications, and surveillance. The Remote Maintenance Monitor System (RMMS) capabilities consist of equipment monitoring and fault alarming, remote certification, automated record keeping, trend analysis and remote control of redundant units and some facility functions.

2. The RMMS at airport facilities would utilize a special processor to be located in the associated Tower/TRACON. For other facilities, the RMMS will utilize a dedicated processor located at each ARTCC. All maintenance information will be transmitted from the cited facilities via existing communication links to the processor for storage, processing, and access by technicians using special common terminals located either local to the ARTCC or at remote locations. No assumptions were made regarding how the RMMS data would be provided and displayed to the responsible technicians since FAA plans have yet to be made in these areas.

3. The DABS and MLS systems to be installed in the Far Term will also incorporate RMMS functions that are compatible with the above concept.

THE OPEN QUESTIONS:

1. Is there merit in specifying common RMMS system design requirements for the implementation of integrated Remote Maintenance Monitor Systems (RMMS) for RCAGs, en route surveillance, VORTAC, and airport facilities (navigation, communication, and

surveillance) in addition to the system compatibility requirements called for in the AAF Interface Control Document (ICD)?

2. At what point should plans be developed for the remote maintenance and monitoring functions to be included in implementable versions of the Microwave Landing System and the Discrete Address Beacon System to insure ease of compliance with the AAF ICD?

THE SITUATION:

The Airway Facilities Service has developed an overall remote monitoring concept for FAA maintained systems. This concept relies on a centrally located dedicated processor at each ARTCC to collect, process, retrieve, and communicate systems status and control information for the facilities within each ARTCC's designated service area. This processor would be remotely or locally accessible by maintenance technicians and would utilize existing communication networks. An Interface Control Document (ICD) has been prepared to specify the form of the technical interfaces between the processor and the remotely monitored facilities. Various Divisions in AAF are currently preparing specific plans for applying RMMS to RCAGs, en route surveillance sites, VORTACs, and airport facilities. These plans are being independently prepared under the general guidance of the ICD. The Automation Division (AAF-700) is charged with preparing a specification of requirements for the processor to include storage size, computational speed, program language, and response times.

The initial RMMS is to include functions for status monitoring and alarming, certification, remote control, record keeping and trend analysis. Depending on the result of studies of their

technical feasibility and their operational desirability, other functions may be included. Growth potential is to be designed into the initial systems to accommodate diagnostics, remote adjustment, failure anticipation, and a problem-solutions file.

Much of the planning of RMMS is still in the developmental stage with systems for VORTACs and RCAGs likely to be the first to be implemented. Some of the questions that will be addressed during RMMS planning are:

- Can the RMMS data and procedures used by technicians that maintain several different types of facilities be identical for common functions? For example, the current general AF training philosophy is to train and assign technicians to maintain both navigation and communications equipment. It would be highly desirable for these technicians' interactions with RMMS to be identical for those maintenance functions that are common for communications and navigation.

- Should the initial RMMS installations for some facilities necessarily include a connection to the RMMS processor at the ARTCC? For example, control of many VORTAC facilities is currently exercised from nearby FSSs. Maintaining this monitoring point in close proximity to the VORTAC location may be sufficient for some of the basic RMMS functions.

Remote maintenance concepts have been planned as integral parts of the MLS and DABS system currently being developed by SRDS. The MLS has had contractor developed remote maintenance systems fabricated and demonstrated for some MLS engineering models. Planning for RMMS that is compatible with the AAF Interface

Control Document will be undertaken as a part of the preparation for the next MLS procurement. The DABS hardware currently being built has an integral performance monitor that transmits system status to the host ATC facility. As a part of the preparation of the DABS Technical Data Package, SRDS will be making some recommendations on the types of quality of data needed for performance monitoring based on their experience with the engineering models. The maintenance portion of the DABS procurement specification will be prepared by AAF.

OPEN ITEM 21: Automated Flight Service Station Configuration

THE ASSUMPTION:

The Flight Service Station automation program will result in a configuration of Automated FSSs as well as a number of manual FSSs through the Far Term (post 1982). The Automated FSSs (AFSSs) will be provided centralized support by up to 20 Flight Service Data Processing Systems (FSDPSs) collocated at existing ARTCCs. Each FSDPS will provide support for a number of AFSSs. In the Far Term, a centralized Aviation Weather Processor (AWP) will process weather and aeronautical data received from the Weather Message Switching Center prior to distribution to the FSDPSs. This data will be reformatted and a second data base developed with contractions expanded for providing direct service to pilots or other users accessing the FSDPSs via Direct User Access Terminals (DUATs). Graphic products received at the AWP from NWS will also be maintained and edited at the AWP prior to distribution to the FSDPSs. Each FSDPS will, additionally, receive radar images from up to 13 radar sites (FAA or NWS). Graphic products and radar images will be redistributed to the AFSSs for quick availability to the specialists at the AFSSs.

THE OPEN QUESTION:

1. Should the Automated Flight Service Stations (AFSSs) be consolidated at the ARTCCs along with the FSDPSs?

2. Should all Flight Service Stations, including the part-time and manual Flight Service Stations be included in that consolidation?

3. What is the optimum scheduling of any consolidation considering the impacts on interfacing systems, the political and human

considerations, the manning and training requirements, and long lead-time items?

4. What actions can be taken in the meantime to retain viable options until 1982-1983?

THE SITUATION:

The Master Plan for the Flight Service Station Automation Program presents two possible configurations for the Flight Service Information System. Under one configuration up to 20 Flight Service Data Processing Systems are collocated at existing ARTCCs to serve AFSSs. This configuration is the one described above under THE ASSUMPTION and used as the basis for the presentation in this document. It is the one currently being planned for implementation. Under the alternate configuration, the Automated Flight Service Stations are also consolidated at the FSDPS locations to form Flight Service Hubs. Additional consolidation of the manual and part-time FSSs could also occur. However, the decision on consolidation will be made by 1983. Because of potential impacts on interfacing systems, it is important that potential impacts and lead-time problems be identified in advance in order to minimize the expense and difficulty of adjusting to the final configuration. The following items summarize the situation:

1. Under current planning the decision to consolidate will be made by 1983.

2. Additional programs that need to be considered and monitored in the meantime because of an actual or potential functional interface with the Flight Service Automation System (FSAS) include: NADIN, RCCS, Ground-Ground Voice Communications, and RMMS.

3. In the case of NADIN, data loads may be affected by the final FSAS configuration decided on and may cause revisions to the NADIN network.

4. In the case of RCCS, the nature of the requirement remains to be specified. Under the current plan with the unconsolidated FSAS, the RCCS capability is not included. Depending on the degree of consolidation, the sizing of the RCCS capability may vary. Also, the DF modification scheduling needs to be reviewed to assure the provision of digital bearing information via the RCCS.

5. Planning and implementation specifics of improvements to Ground-Ground Voice Communications System (e.g., VSCS) will also be impacted by the configuration of the FSAS that results from the consolidation decision.

6. RMMS specifics will also be impacted by the FSAS configuration and potential changes resulting from consolidation.

7. Additionally, functional changes to the FSAS that could be considered in a consolidated system include such things as the availability of PVD displays, the interaction between the Center Weather Service Unit (CWSU) called out in the Aviation Weather Plan and the EFAS function in the FSAS.

8. If consolidation is decided on, building plans, personnel actions (manning requirements, relocations, training, etc.) and detailed transition plans need to be developed.

OPEN ITEM 22: Evolution of the ATC System to Include Automated En Route ATC (AERA)

In general, the Open Items cited in this report involved improvements which were considered as being well along in the development cycle and, if successful, were likely to be implemented as part of the operational ATC system in what was defined as either the Near Term or the Far Term configurations. Automated En Route Automation (AERA) was not included in the Far Term configuration due to the fact that it is still considered to be a long range, advanced development program. AERA is, however, a high priority program within the FAA and could be scheduled to be implemented as part of the ATC system by the late 1980's. As a result, OSEM has decided that it is time to start identifying the interface/integration problems that are likely to be encountered in the introduction of the AERA concept into the operational ATC system and to begin some of the preliminary planning as to how those problems can be resolved. This Open Item is established in response to OSEM's request.

THE ASSUMPTIONS:

1. AERA will be operationally integrated into the en route ATC system after the "Far Term" configuration described in this document has been implemented. This means that AERA will be introduced into an en route system where En Route Metering, Flight Plan Conflict Probe, Conflict Alert, Conflict Resolution, and automated interfaces with terminal automation facilities have already been successfully implemented and are available as aids to the controller. (This presupposes that the current E&D programs will be successful and produce products that will be implemented.)

2. There will be a transition period when the en route data processing and display complex must be able to perform all the functions ascribed to the "Far Term Configuration" plus the functions to be automated by AERA.

3. After the transition period, some of the functions ascribed to the "Far Term Configuration" will be assumed by the AERA programs while other functions of the "Far Term Configuration" will be retained. For example, AERA may provide all the assistance needed with respect to En Route Metering and Flight Plan Conflict Probe and thus eliminate the need for retaining the En Route Metering and Flight Plan Conflict Probe as initially developed for NAS Stage A in the pre-AERA period. On the other hand, the Conflict Alert and Conflict Resolution capabilities developed for NAS Stage A in the pre-AERA period may be retained in order to provide the alert/resolution signals to the controller for those hopefully infrequent occasions where controller intervention is required to avoid violation of separation standards. This is merely an illustration of some of the things which will need to be considered during the integration of AERA capabilities as a part of the overall en route control system. If such an integration takes place, there seems to be at least a reasonable chance that the total requirements for en route data processing and display may be less demanding after the transition phase than during the transition phase.

4. Sometime during the 1985-1995 time frame, the FAA will be replacing the current NAS Stage A data processing and display systems with the next generation equipment. Implementation of AERA will take place during that same time frame. The FAA will time phase the implementation of AERA with the introduction of new data processing and display systems as part of a total program that will not adversely affect system operations and will at the same time minimize the costs of implementing AERA.

THE QUESTIONS:

1. What functions will be performed by AERA?

2. Which of the functions in software currently being performed by NAS Stage A, or planned as additions to NAS Stage A, will continue to be performed during the transition to the AERA capability? Which ones will be retained in the post-AERA system to supplement the AERA capabilities?

3. How will the role of the controller change with the introduction of AERA and how will the transition be made from the pre-AERA to the post-AERA period?

4. What are the facility (hardware/software) implications of 2. and 3. above?

5. What changes/additions to avionics processing and displays and to cockpit procedures will be needed in order to maximize the benefits to be obtained from the AERA capabilities?

THE SITUATION:

Fundamentally, AERA can be viewed as a new capability that can be added to an existing en route control system to fully automate some of the controller functions. This is in contrast to today's NAS Stage A which provides semi-automated aids to the controller and makes it easier for him to carry out the control functions. Thus, AERA will, for the first time, place the controller in the position of intervening in the actual control process only when situations arise that cannot be accommodated by AERA.

The basic capabilities of AERA include projecting the flight path of IFR aircraft forward in time in both the horizontal and vertical planes; determining what and when changes need to be made to flight plan clearances in order to insure that the aircraft movements are conflict free and metered (when required) via fuel efficient paths; sending the changes in the flight plan clearance directly to the aircraft and updating the flight clearance plans resident within the ATC system based on flight progress. The controller's role has yet to be fully defined but responsibilities will include monitoring of overall system performance, intervening to examine and resolve special situations as called for, and continuing the control of aircraft that either are not equipped to receive the AERA messages automatically or are not flying under AERA control.

For those familiar with the objectives of the En Route Metering and Flight Plan Conflict Probe programs to improve the current NAS Stage A capabilities (see Open Item 1), AERA may be viewed as roughly analogous to an integration and automation of the functions to be performed by those programs plus the functions to be performed by the controller in using those programs. That analogy is a gross understatement of the capabilities and sophistication of the AERA system but should be of some help in providing a better understanding of the basic role of AERA.

To date, the AERA project has concentrated on designing computer algorithms and demonstrating their feasibility by applying the algorithms to a simulation of an existing en route sector (Front Royal). This work has progressed to the point where a computer simulation has been developed to demonstrate how the computer algorithms work in the control of air traffic. A planned major

milestone downstream in the program will be to conduct a demonstration of the system in a situation that approximates a realistic control environment. In such a demonstration, AERA would receive information from the existing en route system and would be operated in parallel, with NAS using real time target data. That demonstration would also be used to explore interface/integration problems including changes in the role of the controller that will take place when AERA becomes operational.

Some of the problems that will be encountered in the integration of AERA into the operational system have been thought about and discussed among the project engineers as part of the development work done to date. There has not, however, been any deliberate attempt to identify future interface/integration problems that are likely to be encountered and to study how those problems might best be resolved. Basically, the interface/integration problems are expected to fall within the following categories:

1. The changing role of the controller and his control team.

2. The delineation of the specific functions to be performed by AERA and the functions to be performed by the balance of the en route ATC system.

3. The changes to en route hardware/software that will be needed to support AERA and the other en route functions.

4. The definition of the impact of AERA will have on aircraft avionics if full productivity benefits are to be realized.

5. The definition as to how the AERA and the en route ATC system should be configured and used during the transition period where controllers will be using the existing system in parallel with AERA.

As a result of recent OSEM/Metrek reviews of the AERA program, studies have been initiated on the role of the controller in the AERA time period (Category 1 above). One paper has been prepared by the Metrek AERA Project Manager on a "Proposed Approach for the Division of Tasks Between the Controller and AERA and Introduction of Some Controller as a Manager Concepts." This paper will be used as a strawman in developing concepts to be evaluated during future offline demonstrations of AERA working in parallel with NAS Stage A.

Concepts exist as to how the interface/integration problems listed above might be resolved but there is no specific work underway at the moment to define the preferred solution. Since the implementation of AERA is not anticipated until the 1990 time period, there appears ample time to develop the detailed solutions prior to final decisions on implementation. It may not, however, be to early to consider the potential future impact of AERA in long range studies such as the studies currently underway for replacing the data processing and display subsystems of NAS Stage A (see Open Item 9).

OPEN ITEM 23: Future Navigation

THE ASSUMPTION:

1. The primary navigation system will be VOR-DME until at least 1995 for the national airspace.

2. Other systems such as Loran-C, OMEGA, and GPS will be certified as supplements to VOR-DME in order to meet needs not satisfied by VOR-DME.

THE OPEN QUESTIONS:

1. What will replace VOR-DME if it needs to be replaced to meet aviation navigation requirements and when will the replacement be necessary?

2. What is the most economical navigation system for aviation? For all users?

3. What are the roles of Loran-C, OMEGA, VLF Communications, and GPS in civil aviation navigation?

THE SITUATION:

At this time, the FAA is being requested by several external groups to certify OMEGA and Loran-C as supplements to the VOR-DME system and in the case of Loran-C as a replacement for VOR-DME. In addition, there is some external interest in endorsing the experimental NAVSTAR/GPS program as the replacement for VOR-DME at an early time.

Before VOR-DME is supplemented and/or replaced, several questions must be answered about transition periods, systems compatibility to operate in the same ATC system at the same time, user equipment costs, system availability, etc. These

and other navigation problems are now being analyzed by FAA with definite answers expected in the mid 1980's.

APPENDIX B

SYSTEM INTERFACE ADJUSTMENTS

Interface Adjustment Item

A. Interface Adjustment Item (IAI) Name: Exchange of Conflict Alert Information between Facilities

B. IAI Number: B2-1

C. Location of Problem

(X) Specific problem between specific system elements
( ) Specific problem within a specific system element
( ) General system concern

System element or portion involved in problem: ARTCC

Other system element or portion involved in problem: TRACON/TRACAB (ARTS III)

D. Validity of Problem: For what time period?
( ) Validity not determined
( ) Valid
( ) Not valid

E. Description (Current situation or future situation as currently planned. What changes are recommended?)

In the future, it may be desirable to exchange Conflict Alert and Conflict Resolution Advisory information between facilities (ARTCC and ARTCC; ARTCC and TRACON). This would be done so that both facilities could have the same conflict information for aircraft that are at, or near, the boundary between the two facilities. As currently performed, the Conflict Alert function at one facility might declare an alert for a pair of aircraft, but the Conflict Alert function at the adjacent facility might not declare an alert until a later time, or might not declare an alert at all. This could occur because of differences in scan rates, separation standards, conflict alert algorithms, and use or non-use of flight intent data. Similarly, in the future, one facility might provide a Conflict Resolution Advisory before another facility, and the maneuvers recommended in the two advisories might not be the same.

F. Suggested actions

Considering the lack of common conflict information, it may be desirable to exchange such information between adjacent facilities.

G. Type of Problem

( ) Operational Incompatibility
( ) Operational Inefficiency
(X) Operational Inadequacy
( ) Technical Incompatibility
( ) Technical Inefficiency
( ) Technical Inadequacy
( ) Time-Phasing Difficulty
( ) Lack of Definition
( )

H. Reference Document

J. Remarks

(continue on separate sheets)

K. Origin of the Interface Adjustment Item. Name: Paul O. Dodge Date:

Interface Adjustment Item

A. Interface Adjustment Item (IAI) Name: Communication between DARC and CCC

B. IAI Number: B2-2

C. Location of Problem

( ) Specific problem between specific system elements
(X) Specific problem within a specific system element
( ) General system concern

System element or portion involved in problem: CCC (ARTCC)

Other system element or portion involved in problem: DARC (ARTCC)

D. Validity of Problem: ( ) Validity not determined (X) Valid ( ) Not valid

For what time period? As long as the currently-planned DARC and CCC function together.

E. Description (Current situation or future situation as currently planned. What changes are recommended?)

DARC will be able to receive messages from the CCC, but will not be able to send messages to the CCC. DARC should at least be able to send messages to the CCC that would: (1) request reconstitution of its data base, and (2) transfer its controller-updated data to the CCC when the flow of surveillance data can be resumed through the primary channel.

F. Suggested actions

Determine what changes would be required in CCC software, DARC hardware, messages, and message protocol in order to provide two-way communication.

G. Type of Problem

( ) Operational Incompatibility
(X) Operational Inefficiency
( ) Operational Inadequacy
( ) Technical Incompatibility
( ) Technical Inefficiency
( ) Technical Inadequacy
( ) Time-Phasing Difficulty
( ) Lack of Definition
( )

H. Reference Document

J. Remarks

(continue on separate sheets)

K. Origin of the Interface Adjustment Item. Name: Paul O. Dodge Date:

Interface Adjustment Item

A. Interface Adjustment Item (IAI) Name: Three-Dimensional Weather Interface with En Route Facility

B. IAI Number: B2-3

C. Location of Problem

( ) Specific problem between specific system elements
(X) Specific problem within a specific system element
( ) General system concern

System element or portion involved in problem: ARTCC

Other system element or portion involved in problem:

D. Validity of Problem: For what time period?

(X) Validity not determined
( ) Valid
( ) Not valid

E. Description (Current situation or future situation as currently planned. What changes are recommended?)

In the Far Term, digitized weather data will be provided to ARTCCs. The data will have altitudes associated with it, and thus will be three-dimensional. However, the manner in which the data is to be displayed on PVDs has not as yet been determined.

The weather should be displayed in a manner that will make it most useful to controllers. The use of various levels of brightness, various colors, or other available techniques should be considered.

F. Suggested actions

Investigate requirements and prepare plans for conceptual and developmental work in this area.

G. Type of Problem

( ) Operational Incompatibility
( ) Operational Inefficiency
( ) Operational Inadequacy
( ) Technical Incompatibility
( ) Technical Inefficiency
( ) Technical Inadequacy
( ) Time-Phasing Difficulty
(X) Lack of Definition
( )

H. Reference Document

J. Remarks

(continue on separate sheets)

K. Origin of the Interface Adjustment Item. Name: Paul O. Dodge Date:

Interface Adjustment Item

A. Interface Adjustment Item (IAI) Name: Three-Dimensional Weather Interface with ARTS III

B. IAI Number: B3-1

C. Location of Problem

( ) Specific problem between specific system elements
(X) Specific problem within a specific system element
( ) General system concern

System element or portion involved in problem: TRACON (ARTS III)

Other system element or portion involved in problem:

D. Validity of Problem: For what time period?

(X) Validity not determined
( ) Valid
( ) Not valid

E. Description (Current situation or future situation as currently planned. What changes are recommended?)

In the Far Term, digitized weather data will be provided to ARTS III TRACONs. The data will have altitudes associated with it, and thus will be three-dimensional. However, the manner in which the data is to be displayed on PVDs has not as yet been determined.

The weather should be displayed in a manner that will make it most useful to controllers. The use of various levels of brightness, various colors, or other available techniques should be considered.

F. Suggested actions

Investigate requirements and prepare plans for conceptual and developmental work in this area.

G. Type of Problem

( ) Operational Incompatibility
( ) Operational Inefficiency
( ) Operational Inadequacy
( ) Technical Incompatibility
( ) Technical Inefficiency
( ) Technical Inadequacy
( ) Time-Phasing Difficulty
(X) Lack of Definition
( )

H. Reference Document

J. Remarks

(continue on separate sheets)

K. Origin of the Interface Adjustment Item. Name: Paul O. Dodge Date:

Interface Adjustment Item

A. Interface Adjustment Item (IAI) Name: Terminal and En Route Conflict Alert and Conflict Resolution Advisory Algorithms

B. IAI Number: B3-2

C. Location of Problem

(X) Specific problem between specific system elements
( ) Specific problem within a specific system element
( ) General system concern

System element or portion involved in problem: ARTS III

Other system element or portion involved in problem: ARTCC

D. Validity of Problem: For what time period?

( ) Validity not determined
(X) Valid
( ) Not valid

E. Description (Current situation or future situation as currently planned. What changes are recommended?)

For aircraft that are near facility boundaries (ARTCC-TRACON), differences in Conflict Alert and Conflict Resolution Advisory algorithms between the terminal and en route systems will cause false alerts, no alerts, late alerts, or different recommended maneuvers for one facility in relation to another. This can be confusing to controllers. Algorithm differences can be caused by differences in scan rates, separation standards, and use or non-use of available flight intent data.

For aircraft that are near boundaries between En Route and Terminal areas, the terminal and en route conflict algorithms should be adjusted so as to provide consistent results that are not confusing to controllers.

F. Suggested actions

Investigate feasibility of adjusting conflict algorithms to boundary situations.

G. Type of Problem

( ) Operational Incompatibility
( ) Operational Inefficiency
( ) Operational Inadequacy
(X) Technical Incompatibility
( ) Technical Inefficiency
( ) Technical Inadequacy
( ) Time-Phasing Difficulty
( ) Lack of Definition
( )

H. Reference Document

J. Remarks

(continue on separate sheets)

K. Origin of the Interface Adjustment Item. Name: Paul O. Dodge Date:

Interface Adjustment Item

A. Interface Adjustment Item (IAI) Name ARTCC/FSH-AFSS PIREP Acquisition Coordination

B. IAI Number B6-1

C. Location of Problem

(X) Specific problem between specific system elements ( ) Specific problem within a specific system element ( ) General system concern

System element or portion involved in problem: Flight Serv. Hub (FSH) or Automated Flight Serv.St.(AFSS)

Other system element or portion involved in problem: Air Route Traffic Control Center (ARTCC)

D. Validity of Problem: For what time period? ( ) Validity not determined ( ) Valid ( ) Not valid

E. Description (Current situation or future situation as currently planned. What changes are recommended?)

There is no automated interface between the ARTCC and the AFSS in the Flight Service Station Model 2 Specification or in the Flight Service Station Automation Program Master Plan for PIREP acquisition. However the FSS System Description shows such an interface and the draft AAT requirement document lists it as a requirement.

The exact nature of the interface is dependent to some extent on whether or not consolidation takes place along with collocation. For example, if consolidation at the FSH takes place along with collocation at an ARTCC location, the provision of a "see-all" Plan View Display is a feasible way to get the capability.

F. Suggested actions

Once the decision on consolidation is made, review the requirement and select from alternative methods of providing the automated ARTCC/FSH-AFSS interface.

G. Type of Problem

( ) Operational Incompatibility ( ) Technical Incompatibility ( ) Time-Phasing Difficulty
( ) Operational Inefficiency ( ) Technical Inefficiency (X) Lack of Definition
( ) Operational Inadequacy ( ) Technical Inadequacy ( )

H. Reference Document

6-1, 6-2, 6-3, 6-4, 6-9

J. Remarks

(continue on separate sheets)

K. Origin of the Interface Adjustment Item. Name: W. F. Potter Date:

Interface Adjustment Item

A. Interface Adjustment Item (IAI) Name: RCCS/FSH-AFSS Interface

B. IAI Number: B6-2

C. Location of Problem

(X) Specific problem between specific system elements
( ) Specific problem within a specific system element
( ) General system concern

System element or portion involved in problem: Flight Service Hub(FSH) or Automated Flight Serv.Sta.(AFSS)

Other system element or portion involved in problem: Radio Communications Control System (RCCS)

D. Validity of Problem: For what time period?

( ) Validity not determined
( ) Valid
( ) Not valid

E. Description (Current situation or future situation as currently planned. What changes are recommended?)

An RCCS facility is not included in the Flight Service Station Model 2 Specification, although it is shown in the Master Plan under the consolidation approach. Because of the uncertainty about consolidation and the potential range of consolidation possibilities, the interface cannot be specifically defined or sized at this time since the sizing of the RCCS equipment is in part a function of a matrix defined by the number of specialist consoles in the Flight Service Station and the number of NAVAIDS included.

F. Suggested actions

Until the decision on consolidation is made, RCCS must proceed in a way to be adaptable to the possible range in loading requirements for FSS support.

G. Type of Problem

( ) Operational Incompatibility
( ) Operational Inefficiency
( ) Operational Inadequacy
( ) Technical Incompatibility
( ) Technical Inefficiency
( ) Technical Inadequacy
( ) Time-Phasing Difficulty
(X) Lack of Definition
( )

H. Reference Document

6-1, 6-3, 6-4

J. Remarks

(continue on separate sheets)

K. Origin of the Interface Adjustment Item. Name: W. F. Potter Date:

Interface Adjustment Item

A. Interface Adjustment Item (IAI) Name: AV-AWOS/FSDPS Interface

B. IAI Number: B6-3

C. Location of Problem

(X) Specific problem between specific system elements

( ) Specific problem within a specific system element

( ) General system concern

System element or portion involved in problem: Flight Service Data Processing System (FSDPS)

Other system element or portion involved in problem

D. Validity of Problem: For what time period?

( ) Validity not determined ( ) Valid ( ) Not valid

E. Description (Current situation or future situation as currently planned. What changes are recommended?)

The requirement for an interface with the Aviation Automated Weather Observation System (AV-AWOS) is shown in the Flight Service Station Model 2 Specification, but the details of the interface are not yet known. Since AV-AWOS is currently under development by the National Weather Service at this time, the exact nature of the resultant hardware, software or information content is unknown.

F. Suggested actions

Continue to monitor the AV-AWOS effort so that Flight Service Station requirements will be considered in the design of the interface.

G. Type of Problem

( ) Operational Incompatibility
( ) Operational Inefficiency
( ) Operational Inadequacy
( ) Technical Incompatibility
( ) Technical Inefficiency
( ) Technical Inadequacy
( ) Time-Phasing Difficulty
(X) Lack of Definition
( )

H. Reference Document

6-1, 6-3, 6-4, 6-6

J. Remarks

(continue on separate sheets)

K. Origin of the Interface Adjustment Item. Name: W. F. Potter Date:

Interface Adjustment Item

A. Interface Adjustment Item (IAI) Name: FSDPS/Weather Radar Interface

B. IAI Number: B6-4

C. Location of Problem

(X) Specific problem between specific system elements
( ) Specific problem within a specific system element
( ) General system concern

System element or portion involved in problem: Flight Service Data Processing System (FSDPS)

Other system element or portion involved in problem: Radar (Surveillance) Site

D. Validity of Problem: For what time period?
( ) Validity not determined
( ) Valid
( ) Not valid

E. Description (Current situation or future situation as currently planned. What changes are recommended?)

An interface between each FSDPS and up to 13 FAA or NWS radars providing digitized weather inputs is planned for in the FSS Model 2 specification and in the Automation Master Plan.
If a potential joint FAA/NWS/Air Force effort to support the development of a new doppler weather radar which could detect turbulence as well as precipitation is successful, support from these radars to the Flight Service Stations should be considered.

F. Suggested actions

When the results of the doppler radar development are available, consider the capability for FSS use.

G. Type of Problem

( ) Operational Incompatibility
( ) Operational Inefficiency
(X) Operational Inadequacy
( ) Technical Incompatibility
( ) Technical Inefficiency
( ) Technical Inadequacy
( ) Time-Phasing Difficulty
( ) Lack of Definition
( )

H. Reference Document

6-1, 6-3, 6-4, 6-6

J. Remarks

(continue on separate sheets)

K. Origin of the Interface Adjustment Item. Name: W. F. Potter Date:

Interface Adjustment Item

A. Interface Adjustment Item (IAI) Name: AWP-WMSC Combined Function

B. IAI Number: B6-5

C. Location of Problem

(X) Specific problem between specific system elements
(X) Specific problem within a specific system element
( ) General system concern

System element or portion involved in problem: AWP, WMSC

Other system element or portion involved in problem: Those interfacing with AWP or WMSC

D. Validity of Problem: For what time period?
( ) Validity not determined
( ) Valid
( ) Not valid

E. Description (Current situation or future situation as currently planned. What changes are recommended?)

The WMSC is a data collection and distribution system which provides on line storage, maintenance and retrieval of weather data and NOTAMs. It provides the single NATCOM function not replaced by NADIN. A plan to provide WMSC functions at two AWP (NADIN location) sites is under development by AAT. If implemented it will result in a combined AWP/WMSC being installed in the 1983-1984 time frame. Potential impacts include: revised Model 2 FSDPS and AWP specifications, revised interface specifications for all those agencies currently interfacing with a single WMSC.

F. Suggested actions

Identify specific impacts and changing requirements for Model 2 FSDPSs, AWP and other users and sources for the existing WMSC.

G. Type of Problem

( ) Operational Incompatibility
( ) Operational Inefficiency
( ) Operational Inadequacy
( ) Technical Incompatibility
( ) Technical Inefficiency
( ) Technical Inadequacy
( ) Time-Phasing Difficulty
(X) Lack of Definition
( )

H. Reference Document

Briefing Memo, AAT to Administrator, dated Aug. 10, 1978
References: 6-3, 6-4

J. Remarks

(continue on separate sheets)

K. Origin of the Interface Adjustment Item. Name: W. F. Potter Date:

Interface Adjustment Item

A. Interface Adjustment Item (IAI) Name: Data Flow Between En Route Computers via NADIN

B. IAI Number: B9-1

C. Location of Problem
( ) Specific problem between specific system elements
(X) Specific problem within a specific system element
( ) General system concern

System element or portion involved in problem: NADIN

Other system element or portion involved in problem: ARTCC

D. Validity of Problem: ( ) Validity not determined (X) Valid ( ) Not valid
For what time period? Near Term & Far Term

E. Description (Current situation or future situation as currently planned. What changes are recommended?)

Data interchange between en route computers will be via NADIN, rather than via dedicated channels.

An alternative is to continue use of the current interface, using dedicated 2400 bps circuits.

F. Suggested actions

A study or test should be conducted to determine if NADIN can provide acceptable response times for critical messages between en route computers.

G. Type of Problem

( ) Operational Incompatibility
( ) Operational Inefficiency
( ) Operational Inadequacy
( ) Technical Incompatibility
( ) Technical Inefficiency
( ) Technical Inadequacy
( ) Time-Phasing Difficulty
( ) Lack of Definition
(X) Operational Uncertainty

H. Reference Document

FAA-E-2661, FAA Specification, National Airspace Data Interchange Network (NADIN)

J. Remarks

(continue on separate sheets)

K. Origin of the Interface Adjustment Item. Name: J. C. Fowlkes Date:

Interface Adjustment Item

A. Interface Adjustment Item (IAI) Name: Data Link Rate to ARTCC

B. IAI Number: B9-2

C. Location of Problem

(X) Specific problem between specific system elements
( ) Specific problem within a specific system element
( ) General system concern

System element or portion involved in problem: Data Link (DABS)

Other system element or portion involved in problem: 9020

D. Validity of Problem: For what time period?

( ) Validity not determined
(X) Valid
( ) Not valid

Far Term

E. Description (Current situation or future situation as currently planned. What changes are recommended?)

Communications from a Data Link at a DABS site to an ARTCC will be via one 4800 bps channel.

F. Suggested actions

The data rate, 4800 bps, should be verified. The rate was chosen without any analytical basis.

G. Type of Problem

( ) Operational Incompatibility
( ) Operational Inefficiency
( ) Operational Inadequacy
( ) Technical Incompatibility
( ) Technical Inefficiency
( ) Technical Inadequacy
( ) Time-Phasing Difficulty
( ) Lack of Definition
(X) Technical Uncertainty

H. Reference Document

NA

J. Remarks

(continue on separate sheets)

K. Origin of the Interface Adjustment Item. Name: J. C. Fowlkes Date:

Interface Adjustment Item

A. Interface Adjustment Item (IAI) Name: Redundant Data Link Channel to ARTCC

B. IAI Number: B9-3

C. Location of Problem

(X) Specific problem between specific system elements
( ) Specific problem within a specific system element
( ) General system concern

System element or portion involved in problem: Data Link (DABS)

Other system element or portion involved in problem: 9020

D. Validity of Problem: For what time period?

( ) Validity not determined
(X) Valid
( ) Not valid

Far Term

E. Description (Current situation or future situation as currently planned. What changes are recommended?)

A redundant 4800 bps channel will be provided from Data Link (DABS) to an ARTCC.

F. Suggested actions

The need for a redundant channel should be verified.

G. Type of Problem

( ) Operational Incompatibility
( ) Operational Inefficiency
( ) Operational Inadequacy
( ) Technical Incompatibility
( ) Technical Inefficiency
( ) Technical Inadequacy
( ) Time-Phasing Difficulty
( ) Lack of Definition
(X) Technical Uncertainty

H. Reference Document

NA

J. Remarks

(continue on separate sheets)

K. Origin of the Interface Adjustment Item. Name: J. C. Fowlkes Date:

Interface Adjustment Item

A. Interface Adjustment Item (IAI) Name: Redundant Channel for Surveillance Site to ARTS III TRACON/Tower

B. IAI Number: B9-4

C. Location of Problem

(X) Specific problem between specific system elements
( ) Specific problem within a specific system element
( ) General system concern

System element or portion involved in problem: Surveillance Site

Other system element or portion involved in problem: TRACON/Tower

D. Validity of Problem: For what time period?

( ) Validity not determined
(X) Valid
( ) Not valid

Far Term

E. Description (Current situation or future situation as currently planned. What changes are recommended?)

A channel consisting of four 4800 bps data circuits are provided from a surveillance site to the ARTS III TRACON/Towers.

F. Suggested actions

Determine if a redundant channel is needed.

G. Type of Problem

( ) Operational Incompatibility
( ) Operational Inefficiency
( ) Operational Inadequacy
( ) Technical Incompatibility
( ) Technical Inefficiency
( ) Technical Inadequacy
( ) Time-Phasing Difficulty
( ) Lack of Definition
(X) Technical Uncertainty

H. Reference Document

NA

J. Remarks

(continue on separate sheets)

K. Origin of the Interface Adjustment Item. Name: J. C. Fowlkes Date:

Interface Adjustment Item

A. Interface Adjustment Item (IAI) Name: Data Link Rate to ARTS III TRACON/Tower

B. IAI Number: B9-5

C. Location of Problem
( ) Specific problem between specific system elements
(X) Specific problem within a specific system element
( ) General system concern

System element or portion involved in problem: Data Link (DABS)

Other system element or portion involved in problem: ARTS III TRACON/Tower

D. Validity of Problem: For what time period?
( ) Validity not determined
(X) Valid — Far Term
( ) Not valid

E. Description (Current situation or future situation as currently planned. What changes are recommended?)

The data rate for Data Link to ARTS III is 2400 bps.

F. Suggested actions

Determine if 2400 bps data rate is adequate.

G. Type of Problem

( ) Operational Incompatibility
( ) Operational Inefficiency
( ) Operational Inadequacy
( ) Technical Incompatibility
( ) Technical Inefficiency
( ) Technical Inadequacy
( ) Time-Phasing Difficulty
( ) Lack of Definition
(X) Technical Uncertainty

H. Reference Document

NA

J. Remarks

(continue on separate sheets)

K. Origin of the Interface Adjustment Item. Name: J. C. Fowlkes Date:

Interface Adjustment Item

A. Interface Adjustment Item (IAI) Name: Redundant Data Link Channel to ARTS III TRACON/Tower

B. IAI Number: B9-6

C. Location of Problem

(X) Specific problem between specific system elements
( ) Specific problem within a specific system element
( ) General system concern

System element or portion involved in problem: Data Link (DABS)

Other system element or portion involved in problem: ARTS III

D. Validity of Problem: For what time period?

( ) Validity not determined
(X) Valid
( ) Not valid

Far Term

E. Description (Current situation or future situation as currently planned. What changes are recommended?)

A redundant 2400 bps channel will be provided from Data Link (DABS) to an ARTS III TRACON.

F. Suggested actions

Verify the need for a redundant channel.

G. Type of Problem

( ) Operational Incompatibility
( ) Operational Inefficiency
( ) Operational Inadequacy
( ) Technical Incompatibility
( ) Technical Inefficiency
( ) Technical Inadequacy
( ) Time-Phasing Difficulty
( ) Lack of Definition
(X) Technical Uncertainty

H. Reference Document

NA

J. Remarks

(continue on separate sheets)

K. Origin of the Interface Adjustment Item. Name: J. C. Fowlkes Date:

Interface Adjustment Item

A. Interface Adjustment Item (IAI) Name: TRACON/Tower Interface with NADIN

B. IAI Number: B9-7

C. Location of Problem

(X) Specific problem between specific system elements
( ) Specific problem within a specific system element
( ) General system concern

System element or portion involved in problem: NADIN

Other system element or portion involved in problem: ARTS II, ARTS III, Programmable TPX-42

D. Validity of Problem: For what time period?

( ) Validity not determined
(X) Valid
( ) Not valid

E. Description (Current situation or future situation as currently planned. What changes are recommended?)

NADIN will be designed to operate with ARTS III. There are three types of systems which will be required to interface with NADIN; ARTI II, ARTS III and Programmable TPX-42.

F. Suggested actions

Ensure that NADIN will interface with ARTS II, ARTS III and Programmable TPX-42.

G. Type of Problem

( ) Operational Incompatibility
( ) Operational Inefficiency
( ) Operational Inadequacy
( ) Technical Incompatibility
( ) Technical Inefficiency
( ) Technical Inadequacy
( ) Time-Phasing Difficulty
( ) Lack of Definition
(X) Technical Uncertainty

H. Reference Document

FAA-E-2661, FAA Specification, National Airspace Data Interchange Network (NADIN)

J. Remarks

(continue on separate sheets)

K. Origin of the Interface Adjustment Item. Name: J. C. Fowlkes Date:

Interface Adjustment Item

A. Interface Adjustment Item (IAI) Name: NADIN Interface with TIPS

B. IAI Number: B9-8

C. Location of Problem

(X) Specific problem between specific system elements
( ) Specific problem within a specific system element
( ) General system concern

System element or portion involved in problem: NADIN

Other system element or portion involved in problem: TIPS

D. Validity of Problem: For what time period?

( ) Validity not determined
(X) Valid
( ) Not valid

Far Term

E. Description (Current situation or future situation as currently planned. What changes are recommended?)

NADIN will not be specifically designed to interface with TIPS. There will be a compatible interface only if TIPS, at the interface, operates exactly as ARTS operates (see B9-7).

F. Suggested actions

Ensure that NADIN will be designed to interface with TIPS in the Far Term.

G. Type of Problem

( ) Operational Incompatibility
( ) Operational Inefficiency
( ) Operational Inadequacy
( ) Technical Incompatibility
( ) Technical Inefficiency
( ) Technical Inadequacy
( ) Time-Phasing Difficulty
( ) Lack of Definition
(X) Technical Uncertainty

H. Reference Document

(1) FAA-E-2661, FAA Specification, National Airspace Data Interchange Network (NADIN)
(2) MTR-7161, Vol. 5, Terminal Information Processing System (TIPS) ARTS III Input/Output Requirements.

J. Remarks

(continue on separate sheets)

K. Origin of the Interface Adjustment Item. Name: J. C. Fowlkes Date:

Interface Adjustment Item

A. Interface Adjustment Item (IAI) Name: Center B TTY Network for Flow Control

B. IAI Number: B9-9

C. Location of Problem

(X) Specific problem between specific system elements
( ) Specific problem within a specific system element
( ) General system concern

System element or portion involved in problem: SCC

Other system element or portion involved in problem: ARTCC

D. Validity of Problem: For what time period?

( ) Validity not determined
(X) Valid
( ) Not valid

Near Term & Far Term

E. Description (Current situation or future situation as currently planned. What changes are recommended?)

The Center B TTY network will be used for transfer of flow control information from the SCC to the ARTCCs in the Current system, and NADIN will be used in the Near Term and Far Term.

F. Suggested actions

Message structure and traffic volume will have to be defined and the output devices specified.

G. Type of Problem

( ) Operational Incompatibility
( ) Operational Inefficiency
( ) Operational Inadequacy
( ) Technical Incompatibility
(X) Technical Inefficiency
( ) Technical Inadequacy
( ) Time-Phasing Difficulty
( ) Lack of Definition
( )

H. Reference Document (1) FAA-E-2261, FAA Specification, National Airspace Data Interchange Network (NADIN). (2) WP-12693, Air Traffic Control System Command Center System Description.

J. Remarks

(continue on separate sheets)

K. Origin of the Interface Adjustment Item. Name: J. C. Fowlkes Date:

Interface Adjustment Item

A. Interface Adjustment Item (IAI) Name: Replacement of AIRS

B. IAI Number: B9-10

C. Location of Problem

(X) Specific problem between specific system elements
( ) Specific problem within a specific system element
( ) General system concern

System element or portion involved in problem: ATCSCC

Other system element or portion involved in problem: AIRS

D. Validity of Problem: For what time period?

( ) Validity not determined
(X) Valid
( ) Not valid

Current

E. Description (Current situation or future situation as currently planned. What changes are recommended?)

The Airport Information Retrieval Systems (AIRS) will be replaced by CFJC, and the ATCSCC will not be required to interface with AIRS.

F. Suggested actions

Verify that the ATCSCC will not have to interface with AIRS.

G. Type of Problem

( ) Operational Incompatibility
( ) Operational Inefficiency
( ) Operational Inadequacy
( ) Technical Incompatibility
( ) Technical Inefficiency
( ) Technical Inadequacy
(X) Time-Phasing Difficulty
( ) Lack of Definition
( )

H. Reference Document

J. Remarks

(continue on separate sheets)

K. Origin of the Interface Adjustment Item. Name: J. C. Fowlkes Date:

Interface Adjustment Item

A. Interface Adjustment Item (IAI) Name: Weather Data Flow

B. IAI Number: B9-11

C. Location of Problem

(X) Specific problem between specific system elements
( ) Specific problem within a specific system element
( ) General system concern

System element or portion involved in problem: Aviation Weather Processor (AWP)

Other system element or portion involved in problem: Weather Message Switching Center (WMSC)

D. Validity of Problem: For what time period?

( ) Validity not determined
(X) Valid
( ) Not valid

Far Term

E. Description (Current situation or future situation as currently planned. What changes are recommended?)

Weather data from the automated FSSs (AFSS) will flow via NADIN to both the AWP and the WMSC. The WMSC will assemble these data with data from other sources and make distribution to many places, including the AWP. The AWP will have to test every item to eliminate duplication.

Two alternate flow patterns are suggested. The WMSC could handle all weather data as it presently operates, and send one copy of each item to the AWP, or NADIN could send all weather data to both the WMSC and the AWP. Either of these alternatives would reduce the data processing load at the AWP and the quantity of messages processed by NADIN.

F. Suggested actions

Traffic projections should be analyzed with the objective of obtaining maximum efficiency consistent with meeting system time delay goals.

G. Type of Problem

( ) Operational Incompatibility
(X) Operational Inefficiency
( ) Operational Inadequacy
( ) Technical Incompatibility
( ) Technical Inefficiency
( ) Technical Inadequacy
( ) Time-Phasing Difficulty
( ) Lack of Definition
( )

H. Reference Document

Specification of the Flight Service System, Volume 1
System and Hardware

J. Remarks

(continue on separate sheets)

K. Origin of the Interface Adjustment Item. Name: H. P. Guerber Date:

Interface Adjustment Item

A. Interface Adjustment Item (IAI) Name: FSAS Data Capacity

B. IAI Number: B9-12

C. Location of Problem

( ) Specific problem between specific system elements
( ) Specific problem within a specific system element
(X) General system concern

System element or portion involved in problem: AWP FSDPS

Other system element or portion involved in problem: NADIN

D. Validity of Problem: For what time period?

(X) Validity not determined
( ) Valid
( ) Not valid

Far Term

E. Description (Current situation or future situation as currently planned. What changes are recommended?)

The FSDPS storage capacity was based on estimates of the data base size. Communications requirements were based on the requirement to down load this data base within a given time. Since those estimates, there has been some further definition of the graphic data needed, which could materially increase the storage and communications requirements.

F. Suggested actions

Re-estimate the data, storage and communications requirements.

G. Type of Problem

( ) Operational Incompatibility
( ) Operational Inefficiency
( ) Operational Inadequacy
( ) Technical Incompatibility
( ) Technical Inefficiency
(X) Technical Inadequacy
( ) Time-Phasing Difficulty
( ) Lack of Definition
( )

H. Reference Document (1) Communications Requirements for the Flight Service Baseline System (2) Specification for the Flight Service System - Vol. 1 System and Hardware

J. Remarks

(continue on separate sheets)

K. Origin of the Interface Adjustment Item. Name: H. P. Guerber Date:

Interface Adjustment Item

A. Interface Adjustment Item (IAI) Name: NADIN Specification

B. IAI Number: B9-13

C. Location of Problem

( ) Specific problem between specific system elements
( ) Specific problem within a specific system element
(X) General system concern

System element or portion involved in problem: NADIN Switching Center, NADIN Concentrator

Other system element or portion involved in problem:

D. Validity of Problem: For what time period?

(X) Validity not determined
( ) Valid
( ) Not valid

Near Term, Far Term

E. Description (Current situation or future situation as currently planned. What changes are recommended?)

No specification exists for NADIN II or NADIN III. The only definition that exists for NADIN II and III is in the form of traffic estimates and some feature definition in Appendix Z to FAA-E-2661.

F. Suggested actions

Analysis work should be performed and specifications written to define both NADIN levels II and III.

G. Type of Problem

( ) Operational Incompatibility
( ) Operational Inefficiency
( ) Operational Inadequacy
( ) Technical Incompatibility
( ) Technical Inefficiency
( ) Technical Inadequacy
( ) Time-Phasing Difficulty
(X) Lack of Definition
( )

H. Reference Document

FAA-E-2661, FAA Specification, National Airspace Data Interchange Network (NADIN)

J. Remarks

(continue on separate sheets)

K. Origin of the Interface Adjustment Item. Name: H. P. Guerber Date:

Interface Adjustment Item

A. Interface Adjustment Item (IAI) Name: Long Range Features

B. IAI Number: B9-14

C. Location of Problem
( ) Specific problem between specific system elements
( ) Specific problem within a specific system element
(X) General system concern

System element or portion involved in problem: NADIN Switching Center, NADIN Concentrator

Other system element or portion involved in problem:

D. Validity of Problem: (X) Validity not determined ( ) Valid ( ) Not valid
For what time period? Near Term

E. Description (Current situation or future situation as currently planned. What changes are recommended?)

A number of features have been suggested under the INACS program which would be useful in meeting long term goals. These should be examined for possible incorporation into the NADIN hardware.

F. Suggested actions

Features should be listed and examined for possible incorporation into the initial NADIN procurement.

G. Type of Problem
( ) Operational Incompatibility
( ) Operational Inefficiency
( ) Operational Inadequacy
( ) Technical Incompatibility
( ) Technical Inefficiency
( ) Technical Inadequacy
( ) Time-Phasing Difficulty
( ) Lack of Definition
( )

H. Reference Document: FAA-INACS-061-221-OR, Integrated National Airspace Communications System (INACS) for the Support of Air Traffic Control Operations in the 1980s and 1990s, Operational/Maintenance Requirements

J. Remarks

(continue on separate sheets)

K. Origin of the Interface Adjustment Item. Name: H. P. Guerber Date:

Interface Adjustment Item

A. Interface Adjustment Item (IAI) Name: Graphic Data for AWP

B. IAI Number: B9-15

C. Location of Problem

( ) Specific problem between specific system elements
( ) Specific problem within a specific system element
(X) General system concern

System element or portion involved in problem: AWP NMC

Other system element or portion involved in problem: NADIN

D. Validity of Problem: For what time period? Far Term

(X) Validity not determined
( ) Valid
( ) Not valid

E. Description (Current situation or future situation as currently planned. What changes are recommended?)

A digitized 2400 bps channel will be provided to exchange digitized graphics between NMC and the AWP, even though a path will be available through NADIN.

The digitized graphics could flow from NWC to a NADIN switch then to the AWP, making use of data channels that will exist and the capability of NADIN to process non-alphanumeric messages.

F. Suggested actions

The use of NADIN for this traffic should be evaluated in terms of its potential cost savings.

G. Type of Problem

( ) Operational Incompatibility
( ) Operational Inefficiency
( ) Operational Inadequacy
( ) Technical Incompatibility
( ) Technical Inefficiency
( ) Technical Inadequacy
( ) Time-Phasing Difficulty
( ) Lack of Definition
(X) Cost

H. Reference Document FAA-E-2661, FAA Specification, National Airspace Data Interchange Network (NADIN), Specification for the Flight Service Systems Modernization Program -- Vol. I System and Hardware.

J. Remarks

(continue on separate sheets)

K. Origin of the Interface Adjustment Item. Name: H. P. Guerber Date:

Interface Adjustment Item

A. Interface Adjustment Item (IAI) Name: ATCSCC Concentrator

B. IAI Number: B9-16

C. Location of Problem

( ) Specific problem between specific system elements
(X) Specific problem within a specific system element
( ) General system concern

System element or portion involved in problem: ATCSCC

Other system element or portion involved in problem:

D. Validity of Problem: For what time period?

( ) Validity not determined
(X) Valid
( ) Not valid

Near Term, Far Term

E. Description (Current situation or future situation as currently planned. What changes are recommended?)

It is planned that data to and from the various terminals and printers at the ATCSCC will flow through NADIN, via common 4800 bps trunks.

Some type of concentrator will be needed to allow the several devices to share the common trunks. This function could be performed by the concentrator at the Washington ARTCC, or by a compatible device at the ATCSCC.

F. Suggested actions

Characteristics required should be established and a specification prepared.

G. Type of Problem

(X) Operational Incompatibility
( ) Operational Inefficiency
( ) Operational Inadequacy
( ) Technical Incompatibility
( ) Technical Inefficiency
( ) Technical Inadequacy
( ) Time-Phasing Difficulty
( ) Lack of Definition
( )

H. Reference Document

J. Remarks

(continue on separate sheets)

K. Origin of the Interface Adjustment Item. Name: H. P. Guerber Date:

Interface Adjustment Item

A. Interface Adjustment Item (IAI) Name: Adequacy of Capacity of a 250Hz Wide Slot for RCCS Signalling

B. IAI Number: B9-17

C. Location of Problem

( ) Specific problem between specific system elements
(X) Specific problem within a specific system element
( ) General system concern

System element or portion involved in problem: RCCS

Other system element or portion involved in problem:

D. Validity of Problem: For what time period?

( ) Validity not determined
(X) Valid
( ) Not valid

E. Description (Current situation or future situation as currently planned. What changes are recommended?)

In band signalling and control will probably be exercised thru a 250Hz slot in the voice band width, for keying, confirmation, remote muting, control and status monitoring etc.. It is not known whether the 250Hz will be sufficient for all the requirements. Signalling and remote control requirements have to be met either by means of in band signalling or by some other separate channel.

F. Suggested actions

Determine requirements to see if in band signalling would work or what other means should be used.

G. Type of Problem

( ) Operational Incompatibility
( ) Operational Inefficiency
( ) Operational Inadequacy
( ) Technical Incompatibility
( ) Technical Inefficiency
( ) Technical Inadequacy
( ) Time-Phasing Difficulty
(X) Lack of Definition

H. Reference Document

Draft RCCS System Description

J. Remarks

FAA is aware of this interface adjustment and necessary steps are being taken to assess requirements.

(continue on separate sheets)

K. Origin of the Interface Adjustment Item. Name: F. S. Keblawi Date:

Interface Adjustment Item

A. Interface Adjustment Item (IAI) Name: Adequacy of Interface of Bell System with RCCS Channels Having 250Hz Slot

B. IAI Number: B9-18

C. Location of Problem

( ) Specific problem between specific system elements
(X) Specific problem within a specific system element
( ) General system concern

System element or portion involved in problem: RCCS

Other system element or portion involved in problem:

D. Validity of Problem: For what time period?

( ) Validity not determined
(X) Valid
( ) Not valid

E. Description (Current situation or future situation as currently planned. What changes are recommended?)

To do in band signalling a slot in the voice bandwidth will have to be used. Since the voice channel will interface with the Bell system which has in some "legs" a digital T_1 carrier, the information in the slot might not be fully recovered.

F. Suggested actions

Some analysis and testing of the interface of in band signalling with the Bell system and its T_1 carrier will have to be conducted.

G. Type of Problem

( ) Operational Incompatibility
( ) Operational Inefficiency
( ) Operational Inadequacy
( ) Technical Incompatibility
( ) Technical Inefficiency
( ) Technical Inadequacy
( ) Time-Phasing Difficulty
(X) Lack of Definition
( )

H. Reference Document

Draft RCCS System Description.

J. Remarks

The FAA is aware of this interface adjustment and necessary steps will be taken. (continue on separate sheets)

K. Origin of the Interface Adjustment Item. Name: F. S. Keblawi Date:

Interface Adjustment Item

A. Interface Adjustment Item (IAI) Name: Monitoring/Fault Isolation Philosophy for FAA Communications Planning

B. IAI Number: B9-19

C. Location of Problem
( ) Specific problem between specific system elements
(X) Specific problem within a specific system element
( ) General system concern

System element or portion involved in problem: Planned Procurement of A/G Equip.

Other system element or portion involved in problem: RCCS

D. Validity of Problem: For what time period?
( ) Validity not determined
(X) Valid
( ) Not valid

E. Description (Current situation or future situation as currently planned. What changes are recommended?)

Procurement of solid state A/G transceivers is currently planned to be in the millions of dollars. This equipment would have to interface with the RCCS monitoring/fault isolation system or with the RMM System and it is not configured to do so.

F. Suggested actions

Delay procurement of some of the A/G solid state equipment where feasible, and retrofit those transceivers that have been modernized.

G. Type of Problem

( ) Operational Incompatibility
( ) Operational Inefficiency
( ) Operational Inadequacy
( ) Technical Incompatibility
(X) Technical Inefficiency
( ) Technical Inadequacy
( ) Time-Phasing Difficulty
(X) Lack of Definition
( )

H. Reference Document

Budgetary documents, Draft RCCS System Description, RMMS program briefings.

J. Remarks

(continue on separate sheets)

K. Origin of the Interface Adjustment Item. Name: F. S. Keblawi Date: