ES COPY 1
83/11

FAA WJH Technical Center
00093069

DOT/FAA/ES-83/11

U.S. Department of Transportation
Federal Aviation Administration, AES-510
800 Independence Ave., NW
Washington, D.C. 20591
under Contract DTFA 01-80-C-10030

EVALUATION OF THE FEASIBILITY OF CONSOLIDATING REMOTE ELECTROMAGNETIC RADIATING FACILITIES

Dana Swann
George Boring

FEDERAL AVIATION ADMINISTRATION

JUN 18 1984

TECHNICAL CENTER LIBRARY
ATLANTIC CITY, N.J. 08405

April 1984

Final Report

This document is available to the U.S. public through the National Technical Information Service, Springfield, Virginia 22161.

U.S. Department of Transportation
Federal Aviation Administration

This document is disseminated under the sponsorship of the Department of Transportation in the interest of information exchange. The United States Government assumes no liability for the contents or use thereof.

Technical Report Documentation Page

1. Report No. DOT/FAA/ES-83/11	2. Government Accession No.	3. Recipient's Catalog No.
4. Title and Subtitle Evaluation of the Feasibility of Consolidating Remote Electromagnetic Radiating Facilities		5. Report Date April 1984
		6. Performing Organization Code
7. Author(s) D. Swann and G. Boring		8. Performing Organization Report No. 1378-81-12-3265
9. Performing Organization Name and Address ARINC Research Corporation, a Subsidiary of Arinc Incorporated, 2551 Riva Road, Annapolis, Maryland 21401		10. Work Unit No. (TRAIS)
		11. Contract or Grant No. DTFA 01-80-C-10030
12. Sponsoring Agency Name and Address U.S. Department of Transportation, Federal Aviation Administration, AES-510, 800 Independence Avenue, N.W., Washington, D.C. 20591		13. Type of Report and Period Covered Final Report
		14. Sponsoring Agency Code

15. Supplementary Notes

16. Abstract

This report presents the results of a quick-look analysis of the technical feasibility of the consolidation of air traffic control communications and navigation facilities. The computer model used in this analysis was developed by ARINC Research Corporation.

17. Key Words Consolidation, Collocation, Intermodulation	18. Distribution Statement This document is available to the public through the National Technical Information Service, Springfield, Virginia 22161

19. Security Classif. (of this report)	20. Security Classif. (of this page)	21. No. of Pages	22. Price
UNCLASSIFIED	UNCLASSIFIED	200	

Form DOT F 1700.7 (8-72) Reproduction of completed page authorized

METRIC CONVERSION FACTORS

Approximate Conversions to Metric Measures

Symbol	When You Know	Multiply by	To Find	Symbol
		LENGTH		
in	inches	*2.5	centimeters	cm
ft	feet	30	centimeters	cm
yd	yards	0.9	meters	m
mi	miles	1.6	kilometers	km
		AREA		
in^2	square inches	6.5	square centimeters	cm^2
ft^2	square feet	0.09	square meters	m^2
yd^2	square yards	0.8	square meters	m^2
mi^2	square miles	2.6	square kilometers	km^2
	acres	0.4	hectares	ha
		MASS (weight)		
oz	ounces	28	grams	g
lb	pounds	0.45	kilograms	kg
	short tons (2000 lb)	0.9	tonnes	t
		VOLUME		
tsp	teaspoons	5	milliliters	ml
Tbsp	tablespoons	15	milliliters	ml
fl oz	fluid ounces	30	milliliters	ml
c	cups	0.24	liters	l
pt	pints	0.47	liters	l
qt	quarts	0.95	liters	l
gal	gallons	3.8	liters	l
ft^3	cubic feet	0.03	cubic meters	m^3
yd^3	cubic yards	0.76	cubic meters	m^3
		TEMPERATURE (exact)		
°F	Fahrenheit temperature	5/9 (after subtracting 32)	Celsius temperature	°C

*1 in = 2.54 (exactly). For other exact conversions and more detailed tables, see NBS Misc. Publ. 286, Units of Weights and Measures, Price $2.25, SD Catalog No. C13.10:286.

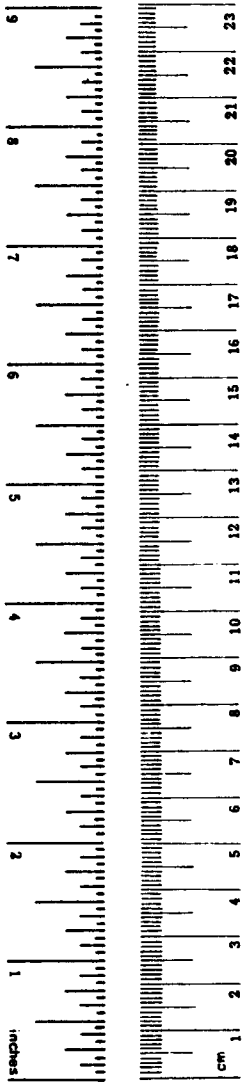

Approximate Conversions from Metric Measures

Symbol	When You Know	Multiply by	To Find	Symbol
		LENGTH		
mm	millimeters	0.04	inches	in
cm	centimeters	0.4	inches	in
m	meters	3.3	feet	ft
m	meters	1.1	yards	yd
km	kilometers	0.6	miles	mi
		AREA		
cm^2	square centimeters	0.16	square inches	in^2
m^2	square meters	1.2	square yards	yd^2
km^2	square kilometers	0.4	square miles	mi^2
ha	hectares (10,000 m^2)	2.5	acres	
		MASS (weight)		
g	grams	0.035	ounces	oz
kg	kilograms	2.2	pounds	lb
t	tonnes (1000 kg)	1.1	short tons	
		VOLUME		
ml	milliliters	0.03	fluid ounces	fl oz
l	liters	2.1	pints	pt
l	liters	1.06	quarts	qt
l	liters	0.26	gallons	gal
m^3	cubic meters	35	cubic feet	ft^3
m^3	cubic meters	1.3	cubic yards	yd^3
		TEMPERATURE (exact)		
°C	Celsius temperature	9/5 (then add 32)	Fahrenheit temperature	°F

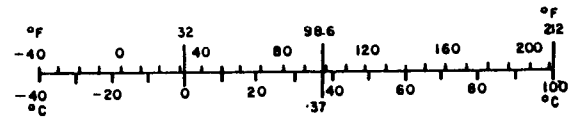

ACKNOWLEDGMENTS

Appreciation is expressed to Mr. Ed Corini for his vision of the original concept of this study. Successful completion of this project could not have been achieved without the continued support of key FAA personnel, including Mr. Manuel Gonzalez and Mr. George Sakai of Systems Engineering Service. Their efforts assured compilation of accurate data pertinent to this project. Their perspective on the FAA's present and future plans for the collocation of air-ground facilities was invaluable in understanding the issues in this study in the context of the whole National Airspace System (NAS) Plan.

SUMMARY

A critical component of the National Airspace System (NAS) modernization plan is the collocation and consolidation of facilities used by the air navigation and air traffic control services. A reduction in the number of separate facilities (including many remotely located sites) would represent a significant saving by reducing the number of support personnel and the associated annual support costs. However, the consolidation of such facilities would create a severe strong signal environment for the radio transmitters and receivers that must be collocated.

This report recognizes many of the problems associated with collocation and site consolidation; it addresses the technical feasibility of collocating on a single site as many as 12 VHF and 12 UHF transmitters and receivers. The problem was approached both theoretically (a computer model was created to develop intermodulation products) and in practical terms. This report cites interference reduction techniques that could be employed to achieve satisfactory performance in a crowded strong signal environment.

The computer model employs a Monte Carlo simulation for random selection of frequencies, and calculates the number of resulting intermodulation products that may be expected to interfere with air traffic control receivers at the same site. Data produced by the computer model resulted in figures of merit which indicated the feasibility of consolidation. The computer model verified the expected increased severity of interference as the number of collocated communications channels is increased. The collocation interference problem is further complicated when the consolidated site includes a VOR navigation station or is located near a commercial FM broadcast station.

This report also contains a practical approach to the solution of the severe interference problems. Citing currently available isolation techniques and devices, the report assesses the interference reduction measures that will be necessary to achieve satisfactory operation. For example, with only three VHF and three UHF channels collocated, interference control can be achieved with a minimum of engineering effort. As the number of collocated transmitters and receivers increases to 12 of each, more

isolation devices must be employed. The losses incurred through the employment of isolation devices probably will require the use of 50-watt amplifiers and may also require the installation of higher-gain antennas. When collocating with a 200-watt VOR station or an FM broadcast station, all available interference control techniques and devices will be required.

This report arrives at the conclusion that the collocation of air traffic control facilities can be successfully accomplished through the employment of transmitters and receivers designed, manufactured, and tested according to performance specifications that reflect severe requirements of consolidated sites and the wise use of isolation devices. The following conclusions and recommendations are included in the report:

(1) To avoid obvious intermodulation products, frequencies assigned to collocated facilities should be selected carefully. Present FAA frequency management programs appear adequate for this purpose.

(2) No equipment should be considered for collocation unless that equipment has been manufactured according to specifications demanding exceptional performance in a crowded signal environment or has been tested exhaustively and found suitable for collocation.

(3) All future procurement of VHF and UHF transmitters and receivers for the air traffic control service should be made according to specifications containing the performance requirements for collocated facilities. Specifications for older equipment still in use should be consulted (see Appendix A for this purpose).

(4) Existing government-owned structures not currently in use may be employed for collocated communications facilities resulting in significant savings in both time and money. Abandoned sites usually provide favorable locations because of existing, adequate utilities and roads.

(5) Modification, remodeling, or enlargement of existing structures usually is more cost-effective than new construction. The actual calculation of such cost savings was beyond the scope of this contract and is not included in this report.

(6) Collocation with VOR facilities is feasible but represents a significant technical challenge. The transmitters, receivers, and antenna systems of the ATC system usually can be installed and engineered to provide satisfactory service in the presence of the VOR. The communications antennas and their support structures, however, may degrade the VOR course structure to make the commissioning of the VOR without restrictions quite difficult. The impact on the VOR will increase with the number of communication channels and the number of installed antennas.

(7) If collocation with a VOR must be accomplished, it is recommended that the number of VHF and UHF antennas be held to a minimum. In addition, their height and location must be such that interference to airway radials and impact on low-altitude communications reception is minimized. Antennas may be located below the horizon of the VOR antenna. Horizontally polarized components also should be avoided, to minimize the possible impact of re-radiated signals on the VOR course structure.

(8) Collocation with VHF/FM broadcast stations also is difficult, but manageable. It does not dictate the severe antenna installation restrictions applied to the VOR collocation, but requires similar signal isolation techniques. Each site will present a unique set of problems and will require its own engineering solution. Collocation of Air Traffic Control communications with Long Range Radar, Air Traffic Control Radar, Radar Control Approach (RAPCON), and other facilities was beyond the scope of this contract, and therefore is not addressed in this report.

(9) Site layouts and antenna configurations should minimize the number of antennas installed on collocated sites, and assure the maximum isolation by both vertical and horizontal separation of the antennas. New antennas, antenna support structures, and isolation devices for successful collocation of facilities should be added to the installation equipment inventory for application at new or existing sites where improved performance or isolation may be required.

(10) Isolation not provided by physical separation of antennas must be achieved electrically. The cost of electrical isolation includes both the monetary cost of the devices to be installed and the losses associated with their introduction into the system. In most cases, the losses will require the use of either an antenna system providing several dB of gain or the optional 50-watt linear amplifier, or both.

(11) Electrical isolation of installed VHF and UHF systems will require the best engineering practices for the most appropriate use of the many currently available isolation devices, including filters, isolators, cavities, circulators, and multicouplers. These are the tools that make successful site consolidation and equipment collocation possible. New techniques and new isolation devices should be introduced as they are required, or as they may become available.

(12) Development of unique installation design criteria to reflect critical interference control requirements was beyond the scope of this contract and has not been addressed in this report; however, most requirements can be satisfied by intensive site engineering and employment of unique devices. Such devices may include special filters, selective shielding, custom antennas and support structures, and careful placement of critical systems components.

(13) It is recommended that the FAA create a special task force to study and solve extraordinary collocation problems that cannot be managed or solved by normal site engineering practices. Successful collocation and isolation techniques developed by this special task force should be made available to all FAA regions for possible application at other locations with similar problems.

GLOSSARY OF ABBREVIATIONS AND ACRONYMS

ATC	Air Traffic Control
ΔF	Delta-F
EMI	Electromagnetic Interference
ERP	Effective Radiated Power
FAA	Federal Aviation Administration
GCA	Ground Control Approach
HPF	High-Pass Filter
IF	Intermediate Frequency
imp	Intermodulation Product
LPF	Low-Pass Filter
M/C	Multicoupler
NAS	National Airspace System
RAPCON	Radar Approach Control
RCF	Remote Communications Facility
RFI	Radio Frequency Interference
Rx	Receiver
TACAN	Tactical Air Navigation
Tx	Transmitter
VOR	VHF Omnidirectional Range
VORTAC	VHF Omnidirectional Range with TACAN

CONTENTS

	Page
ACKNOWLEDGMENTS	iii
SUMMARY	v
GLOSSARY OF ABBREVIATIONS AND ACRONYMS	ix
CHAPTER ONE: INTRODUCTION	1-1
1.1 Background	1-1
1.2 Objectives	1-1
1.3 Scope	1-2
1.4 Technical Approach	1-2
1.5 Report Organization	1-3
CHAPTER TWO: A THEORETICAL APPROACH TO SITE CONSOLIDATION	2-1
2.1 Computer Model Simulation of Intermodulation Products	2-1
2.1.1 VHF and UHF Communication Channel Interference Modeling	2-1
2.1.2 FM Broadcast Band Interference Modeling	2-4
2.1.3 VOR Interference Modeling	2-7
2.2 Results of Computer Model Simulation	2-7
2.2.1 VHF and UHF Communication Channel Interference Results	2-7
2.2.2 FM Interference Results	2-15
2.2.3 VOR Results	2-15
CHAPTER THREE: PRACTICAL CONSIDERATIONS FOR CONSOLIDATION AND COLLOCATION	3-1
3.1 Consolidation and Collocation of Air Traffic Control Facilities	3-1
3.1.1 Advantages of Site Consolidation and Equipment Collocation	3-2

CONTENTS (continued)

		Page
3.1.2	Disadvantages of Site Consolidation and Equipment Collocation.	3-2
3.1.3	Additional Facts to be Considered.	3-3
3.2	Hardware Considerations	3-3
3.2.1	Transmitters and Receivers	3-4
3.2.2	Isolation Devices.	3-5
3.2.3	Antennas	3-8
3.3	A Basic Approach to Collocation	3-8
3.3.1	Three VHF/Three UHF Channels	3-9
3.3.2	Six VHF/Six UHF Channels	3-9
3.3.3	Up to Twelve VHF/Twelve UHF Channels	3-16
3.4	Complications of Collocating With VOR	3-16
3.4.1	Additional Isolation Techniques Required	3-19
3.4.2	Antenna Considerations	3-23
3.4.3	Total Impact on Both Facilities (VOR and ATC Communications).	3-23
3.5	Complications of Collocation Plus VHF/FM Broadcast Station	3-25
3.5.1	Techniques Required for Isolation.	3-25
3.5.2	Impact on the Air Traffic Control Facility . . .	3-29
3.6	Solution of Special or Unique Problems.	3-29
CHAPTER FOUR:	CONCLUSIONS AND RECOMMENDATIONS	4-1
APPENDIX A:	EQUIPMENT SPECIFICATIONS.	A-1
APPENDIX B:	AIR TRAFFIC CONTROL VHF AND UHF FREQUENCIES	B-1
APPENDIX C:	COMPUTER MODEL LISTING.	C-1
APPENDIX D:	COMPUTER MODEL OUTPUT DATA.	D-1

CONTENTS (continued)

LIST OF ILLUSTRATIONS

Figure		Page
2-1	Delta-F Windows in Computer Model	2-2
2-2	VHF Channel Spacing (MHz)	2-5
2-3	FM Intermod Product	2-6
2-4	Sample Computer Model Printout	2-8
2-5	Intermodulation Problems	2-10
2-6	Number of Conflicts for Various Delta-F	2-13
2-7	Frequency Sets for Various Delta-F	2-14
2-8	FM/VOR Intermodulation Products	2-16
3-1	Eight-Antenna Sample Site Configuration	3-10
3-2	Configuration for Six Frequencies	3-11
3-3	Signal Losses for Six Frequencies	3-12
3-4	Configuration for Twelve Frequencies	3-13
3-5	Signal Losses for Twelve Frequencies	3-14
3-6	Configuration for Eighteen Frequencies	3-17
3-7	Configuration for Twenty-Four Frequencies	3-18
3-8	Configuration for Twenty-Four Frequencies with a VOR Transmitter	3-20
3-9	Transmitter Signal Losses for Twenty-Four Frequencies with a VOR Transmitter	3-21
3-10	Receiver Signal Losses for Twenty-Four Frequencies with a VOR Transmitter	3-22
3-11	Configuration with Twenty-Four Frequencies, VOR and FM Transmitters	3-26
3-12	Transmitter Signal Losses for Twenty-Four Frequencies with VOR and FM Transmitters	3-27
3-13	Receiver Signal Losses for Twenty-Four Frequencies with VOR and FM Transmitters	3-28

LIST OF TABLES

Table		Page
2-1	Assigned VHF Air Traffic Control Frequencies	2-4
2-2	Comparison of Computer Runs for Different Numbers of Iterations	2-6
2-3	Standard Input Values for Computer Runs	2-11
2-4	Results for Standard Input Values	2-12
3-1	Sample of Second-, Third-, Fourth-, and Fifth-Order Intermodulation Products From Three VHF Sources	3-7

CHAPTER ONE

INTRODUCTION

1.1 BACKGROUND

A critical component of the National Airspace System (NAS) modernization plan is the collocation of navigation, surveillance, and communication transmitting and receiving equipment into consolidated facilities. These consolidated remote communications facilities (RCF) will provide the required services but at a reduced maintenance and operational cost. The key issue indicating the probability of success of the collocation process concerns the compatibility of collocated equipments from the viewpoint of electromagnetic interference (EMI) and radio-frequency interference (RFI).

The following items were identified as necessary to accomplish the proper analysis of collocation in view of the National Airspace System Plan:

- Determine the feasibility and limitations of collocation consistent with Federal Aviation Administration (FAA) standards and NAS requirements, identifying those issues which require detailed analysis.

- Perform detailed analysis based on issues identified in Phase I to support adequately the consolidation objective.

- Develop guidelines, procedures, and standards to support the RCF program in the field; coordinate this effort with FAA regional personnel responsible for implementation of the consolidation effort.

1.2 OBJECTIVES

The FAA, recognizing the serious problems that must be faced in considering collocation, contracted with ARINC Research to perform a determination of the technical feasibility of such an effort. This effort sought to satisfy the following objectives:

- <u>Define the Feasibility of Collocation</u> - The probable success of such an effort should first be examined from a theoretical point of view to demonstrate the benefits of collocation. The need for

a detailed analysis of the problem should be demonstrated. Models may be used, and comments should be made on real-world considerations, as necessary, in this quick-look analysis.

- Develop Scenarios and Perform Interference Analyses - More detailed analyses should be performed on a selected set of RCF scenarios which portray a set of candidate site configurations. Major technical issues should be explored, indicating the types of problems encountered and their proposed solutions consistent with the FAA National Airspace System Plan.

- Identify Areas Requiring Further Study - As a result of these efforts, guidance should be provided to the FAA in defining a plan for implementation and other future activities relevant to the collocation of radiating equipment.

1.3 SCOPE

This report documents an analysis of the feasibility of collocation using a quick-look analysis. Practical bounds for the proposed collocation effort were determined by a computer model to simulate the intermodulation problems generated for various numbers of transmitter and receiver frequencies in selected scenarios. The range of problems which would ultimately determine the probability of success of collocation were defined. Comments were presented on techniques and equipment necessary to address the interference problems.

A detailed specification of equipment required to solve these interference problems was out of the scope of this effort and was not made except to demonstrate that certain classes of devices are available and they can be employed to solve interference problems if properly engineered into each specific site configuration. A cost analysis of collocation was also determined to be out of scope of this effort and therefore has not been included in this report.

1.4 TECHNICAL APPROACH

In this quick-look analysis, a set of interference problems was analyzed to determine the feasibility of collocation. Second-order and third-order intermodulation products were deemed to be the most serious problems faced in a collocation implementation and therefore were of prime consideration in this quick-look analysis. A computer model was created to theoretically bound the collocation problem by performing a Monte Carlo simulation of intermodulation products generated by random selection of sets of VHF and UHF frequencies. This model determined the number of intermodulation products which fell within a certain window or guard band around each of the frequencies in a frequency set, and it determined appropriate statistics.

The output of the model indicated the average number of problems that could be expected given the random selection of VHF and UHF frequencies as defined by the input parameters. The distribution of results presented the probability of successfully avoiding second-order and third-order intermodulation problems by proper frequency engineering, thereby minimizing the total number of interference problems encountered in an actual site implementation.

Specific scenarios were chosen to evaluate the actual interference problems that could be expected. Amplitudes for interference products for certain selected cases were noted and interference control equipment was proposed as a guide to the solution, on a case-by-case basis, of these specific problems. These examples indicated the types of new equipment and procedures that the FAA may need to consider.

1.5 REPORT ORGANIZATION

The remainder of this report is organized as follows:

- Chapter Two is a description of the computer model used in the simulation along with the results of the theoretical analysis of second-order and third-order intermodulation products.

- Chapter Three portrays in detail the advantages and disadvantages of collocation by the exploration of specific site configuration examples and the definition of the technical procedures necessary to eliminate the expected interference products.

- Chapter Four details the conclusions reached in this study and the recommendations made to the FAA regarding necessary future work to quantify the technical and economic impact of the RCF program.

- Appendix A contains the original performance specifications for collocated VHF and UHF transmitters and receivers in the Air Traffic Control (ATC) environment as initially developed jointly by the FAA and the Department of Defense in 1966. Equipment designed to this specification represents the majority of equipment currently in use by the FAA.

- Appendix B details the present VHF and UHF frequencies used by the FAA and considered in this study.

- Appendix C contains a listing of the computer model.

- Appendix D contains the results of exercising the computer model.

FAA WJH Technical Center
00093069

CHAPTER TWO

A THEORETICAL APPROACH TO SITE CONSOLIDATION

This chapter describes the computer model that was developed to examine the generation of intermodulation products by the use of a Monte Carlo simulation.

2.1 COMPUTER MODEL SIMULATION OF INTERMODULATION PRODUCTS

The Task I effort concerned the determination of the technical feasibility of consolidation. Certain benefits and penalties exist when the collocation of a number of transmitters and receivers is considered. Therefore, to address collocation and to quantify how valuable it could be, a computer model was developed to implement a quick-look procedure. The purpose of the procedure was to make an initial determination of the bounds for implementation of collocation, with an indication of the probability of success of such a venture.

The computer model was developed to choose sets of VHF and UHF frequencies and to calculate intermodulation products formed by them. The frequencies were randomly chosen from the list available to the FAA for air traffic control (see Appendix B). Together with the two emergency frequencies, these computer-selected frequencies composed a frequency set with which the analysis was performed. Based on input specifications, the model was exercised to produce data indicating the average number of intermodulation problems expected for a set of n frequencies. The model, as developed by ARINC Research, was written in Fortran and was implemented on a PDP 11/34 computer. (A listing of the program appears in Appendix C.)

2.1.1 VHF and UHF Communication Channel Interference Modeling

In this initial analysis, the n transmit/receive frequencies in each frequency set were used to generate all second-order and third-order intermodulation products. If the frequency of any intermodulation product fell within a certain frequency range (Delta-F) of any of the frequencies in the frequency set, then the product was deemed to be a problem. By this approach, amplitudes of intermodulation products were not considered since the detailed data required on specific equipment would void the use of a general quick-look analysis. Based on the choice of a number of

frequency sets during the operation of the model, statistics were compiled to indicate the severity of the interference problem from an intermodulation product viewpoint.

The computer model as it now exists does not allow the definition of problems by a consideration of interfering signal amplitudes. The model was designed to accommodate the consideration of the amplitudes of intermodulation products for selected scenarios (e.g., third-order products with two collocated transmitters and receivers). However, critical data as transmitter spectrum signatures and receiver pass band skirts were not available from the FAA or manufacturers consulted during the study. The addition of these data would have resulted in a refinement in the prediction of the number of expected intermodulation products. However, the output of the model was used as a figure of merit indicating the relative difficulty of collocating various frequencies and, therefore, has minimal impact on the conclusions of this phase of the effort.

The basic operation of the computer model is graphically represented in Figure 2-1. According to the input specifications, the computer model selects a set of frequencies, two of which are shown in the figure as f1 and f2. Each frequency is protected by a window of width 2 Delta-F, so that any intermodulation product which occurs within that or any other Delta-F window will be identified as a problem. Various values of Delta-F were chosen during the exercise of the model.

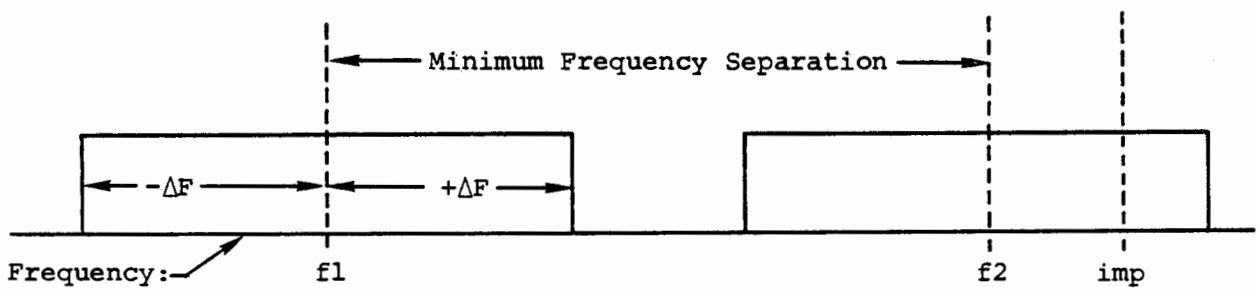

FIGURE 2-1

DELTA-F WINDOWS IN COMPUTER MODEL

Any intermodulation product which falls within a Delta-F window is noted as a potential problem; statistics are compiled accordingly. Tests for second-order and third-order intermodulation products, as selected by the user, are performed for each set of frequencies chosen. All products which fall within the window around any frequency in the frequency set are noted. In the figure, an intermodulation product (imp) is shown to fall within Delta-F of frequency f2.

After all problems are determined for this particular set of n frequencies, the computer randomly selects the next set from the available list of VHF and UHF frequencies (noted in Appendix C) and repeats the analysis. At least 100 frequency sets are chosen during each computer run to ensure a statistically valid analysis.

Inputs to the model included the following:

- Number of VHF frequencies (12 maximum)
- Number of UHF frequencies (12 maximum)
- Minimum VHF frequency separation (1.5 MHz typically)
- Minimum UHF frequency separation (1.5 MHz)
- Guard band frequency (Delta-F)
- Intermodulation tests to be performed
- Number of frequency sets to be tested (100 typically)
- Interfering VOR frequency (optional)
- Interfering FM broadcast band frequency (optional)

The model considered an equal mix of VHF and UHF frequencies in groups of 6, 12, 18, and 24. In addition, the two emergency frequencies of 121.5 MHz (VHF) and 243.0 MHz (UHF) were included by the computer model in each frequency set.

The computer model randomly selected the first VHF frequency from the list of available frequencies (as noted in Appendix B). Before it could select the next VHF frequency from the list, it first confirmed that they were apart in frequency by the separation defined in the input specification. A typical value for VHF frequencies was 1.5 MHz, which is used by the FAA for the separation in frequency of collocated equipment. However, due to the distribution of Air Traffic Control VHF frequencies (as shown in Table 2-1), the actual maximum separation possible diminished (as shown in Figure 2-2). For that reason, the separation was reduced to 1.0 MHz to accommodate 12 collocated VHF frequencies. UHF frequencies were selected in the same fashion from the list (as detailed in Appendix B), although the minimum spacing for UHF frequencies remained at 1.5 MHz.

The standard procedure for exercising the computer model involved the performance of all of the second-order and third-order intermodulation tests. The model was sufficiently flexible to allow testing for one particular type of product as part of a sensitivity analysis.

Each computer output presented statistics from 100 frequency sets (or iterations). Sensitivity tests were performed on all input variables to confirm the model's proper functioning. In one case, shown in Table 2-2,

TABLE 2-1

ASSIGNED VHF AIR TRAFFIC CONTROL FREQUENCIES

ATC Frequencies		Number Available	
Band (MHz)	Use	50 kHz Spacing	25 kHz Spacing
118.0-121.4	Air Traffic Control	69	137
121.5	Emergency	1*	1*
123.6-128.8	Air Traffic Control	105	209
132.025-135.975	Air Traffic Control	79	159
Total		254	506

*100 kHz spacing for the emergency channel.

the major difference in input values between Example A and Example B was the number of iterations which varied from 100 to 10,000. As shown in a comparison of the output values, no significant differences were noted, giving a high degree of confidence to this analysis.

2.1.2 FM Broadcast Band Interference Modeling

Other interfering frequencies were also considered in this analysis. A broadcast band FM transmitter, located near the site of an FAA communications facility, may present itself as a wide-band, potentially high-power interfering source. The interference spectrum may be very complex and usually requires a detailed analysis in a manner that is beyond the scope of this study.

An initial approach may be taken, however, by modeling the FM induced intermodulation products as simple second-order or third-order products possessing a bandwidth. The operation of the model for the inclusion of an FM signal in the analysis is illustrated in Figure 2-3. In this case, the intermodulation product from the FM broadcast band transmitter has a band of assumed frequencies. If the intermodulation product window (imp) intersects a Delta-F window, then an intermodulation problem is noted. As a first approximation, the FM bandwidth is assumed to be 50

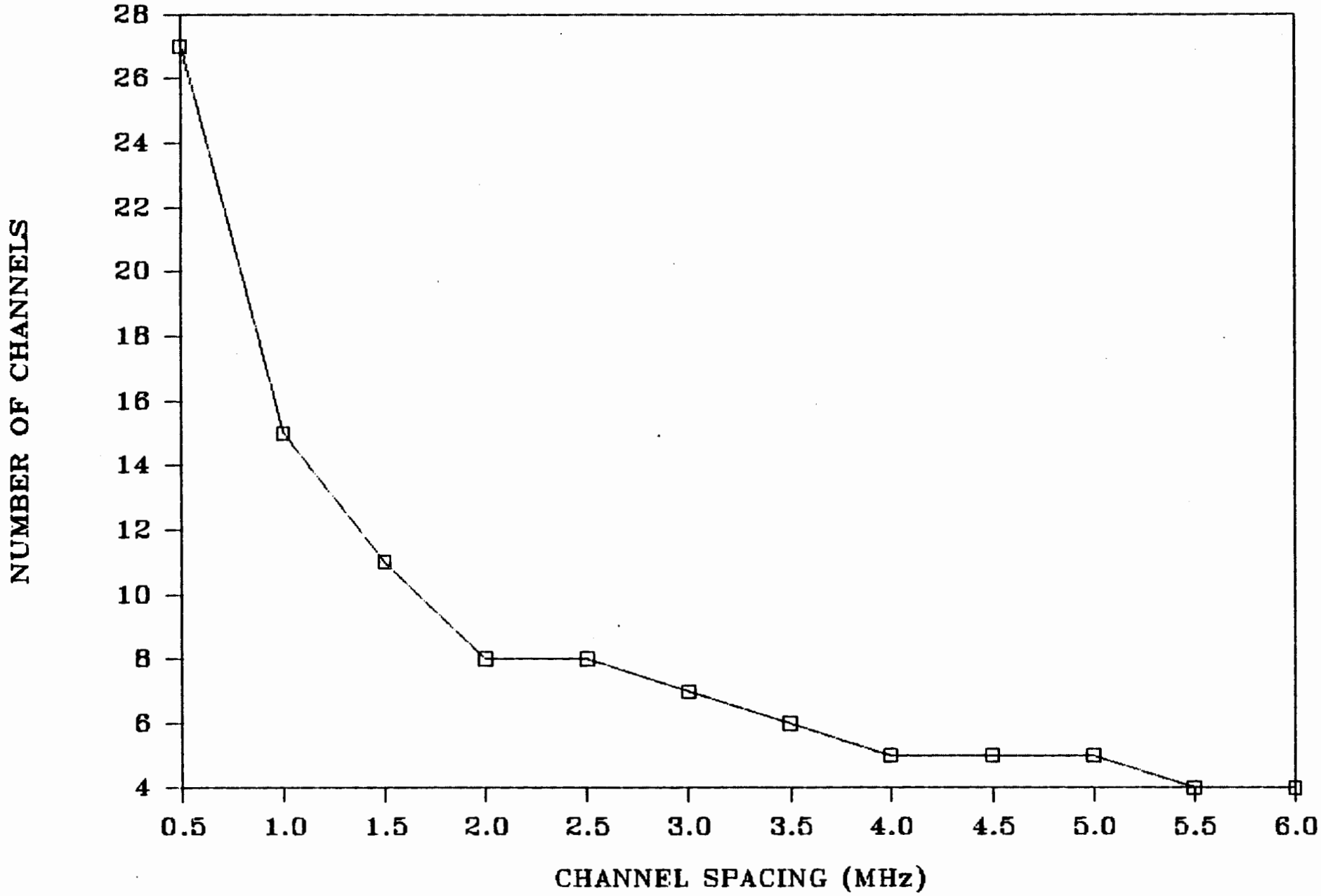

FIGURE 2-2

VHF CHANNEL SPACING (MHz)

TABLE 2-2

COMPARISON OF COMPUTER RUNS FOR DIFFERENT NUMBERS OF ITERATIONS

Input/Output Values	Example A	Example B
Input Values		
Number of Iterations	10,000	100
Delta-F	.100 MHz	.100 MHz
Number of VHF Frequencies	12	12
VHF Spacing	1.000 MHz	1.000 MHz
Number of UHF Frequencies	12	12
UHF Spacing	1.500 MHz	1.500 MHz
VHF Emergency Frequency	121.5 MHz	121.5 MHz
UHF Emergency Frequency	243.0 MHz	243.0 MHz
VOR Frequency	Not used	Not used
FM Broadcast	Not used	Not used
Intermodulation Tests	2f-f'	2f-f'
	2f+f'	2f+f'
	f-f'	f-f'
	f+f'	f+f'
	2f	2f
	3f	3f
Output Values		
Number of Possible Conflicts	68,952	68,952
Mean Conflicts Per Iteration	27.6	28.0
Standard Deviation	8.8	9.1

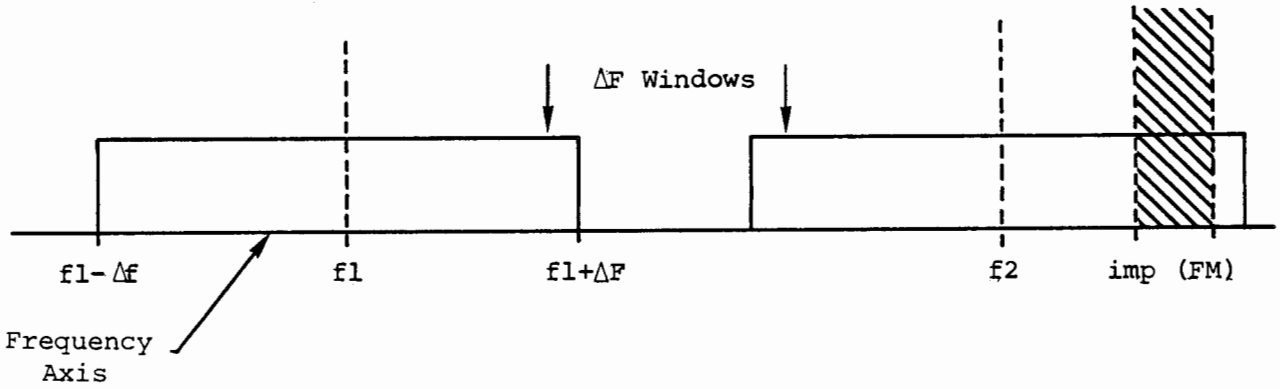

FIGURE 2-3

FM INTERMOD PRODUCT

kHz. The intermodulation product is therefore modeled as being wideband in nature.

2.1.3 VOR Interference Modeling

A VOR (VHF Omnidirectional Range) or a VORTAC (VHF Omnidirectional Range with Tactical Air Navigation [TACAN]) is another type of signal that has the potential for significant impact on the collocation problem. The FAA envisions locating transmitters and receivers at many existing VOR and VORTAC sites; yet detailed analysis of the impact on the VOR as a navigation facility is beyond the scope of this study. With certain simplifying assumptions, however, an approach has been taken in the computer model to indicate the impact of the VOR on air traffic control communications.

The VOR, though a high-power constant signal with a complex spectrum, has been viewed with a first-order approximation as a simple interfering signal, in much the same way another on-site transmitter would be viewed. The frequency of a VOR is entered into the model as an input, and intermodulation products are calculated to determine the number that would fall within the Delta-F windows. The model does not address the interference of the VOR signal in terms of power or duration. Chapter Three details the issues regarding interference from a VOR transmitter and the difficulty associated with the collocation of a communications facility and a navigation facility.

2.2 RESULTS OF COMPUTER MODEL SIMULATION

In this quick-look analysis the computer model was the primary vehicle for determining the feasibility of collocation. The data obtained are detailed in the following sections.

2.2.1 VHF and UHF Communication Channel Interference Results

All outputs produced by the model include statistics on the number of intermodulation problems per frequency set in the form shown in Figure 2-4. All input parameters specified by the user are detailed, including the intermodulation tests performed. The results of the analysis are given in the frequency conflict section. The number of possible pairs indicates the number of intermodulation products that were generated for all intermodulation tests to be performed. The number is determined by:

$$\text{Number of products} = NT_1 + N(N - 1)T_2$$

where

N = the number of frequencies

T_1 = the number of intermodulation tests involving one frequency (e.g., 2f)

T_2 = the number of intermodulation tests involving two frequencies (e.g., 2f + f')

```
                    RANDOM FREQUENCY INTERMODULATION SIMULATION
                    ===========================================

NUMBER OF ITERATIONS: 10000                DELTA F =       0.100 MHz

RANDOM VHF FREQUENCIES:  12                VHF SPACING =  1.000 MHz
RANDOM UHF FREQUENCIES:  12                UHF SPACING =  1.500 MHz

VHF EMERGENCY = 121.500 MHz                UHF EMERGENCY = 243.000 MHz
VOR FREQUENCY =   0.000 MHz                FM BROADCAST =    0.000 MHz
(forced bandwidth 25 kHz)                    (forced bandwidth +/-   0 kHz)
                     (Frequency of zero means not tested for)

INTERMODULATION PRODUCTS TESTED:  2f - f'
                                  2f + f'
                                  f - f'
                                  f + f'
                                  2f
                                  3f

=====================================================================

FREQUENCY CONFLICTS:
     NUMBER OF POSSIBLE CONFLICTS:  68952.
     MEAN CONFLICTS PER ITERATION:   27.6
     STANDARD DEVIATION:              8.8

=====================================================================

CONFLICT DISTRIBUTION FOLLOWS
```

FIGURE 2-4

SAMPLE COMPUTER MODEL PRINTOUT

The number of possible conflicts indicates the number of opportunities for intermodulation products to fall within any of the Delta-F windows. This is defined by:

$$\text{Number of conflicts} = N(\text{Number of products})$$

$$= N^2T_1 + N^2(N - 1)T_2$$

The mean number of conflicts per iteration indicates the average number of intermodulation products which fall within any of the Delta-F windows in an average frequency set. The standard deviation of the same is also noted on the output.

The distribution of the number of conflicts corresponding to the data in Figure 2-4 is shown in Figure 2-5, which shows the number of times intermodulation products were determined to be problems according to the selected intermodulation tests. For example, for 10,000 frequency sets (iterations), there were 44 sets that had exactly 10 intermodulation products that fell within any of the 26 Delta-F windows in that set (consisting of 12 VHF, 12 UHF, and the 2 emergency channels). The histogram displays a normal type of distribution, which indicates the validity of the random procedures incorporated in this model. (Data gathered from this exercise of the computer model are contained in Appendix D.)

A certain set of input variables, noted in Table 2-3, was developed as the prime set for testing. From the computer runs using these variables, conclusions were drawn about the difficulty of the intermodulation problem. Equal numbers of VHF and UHF frequencies were used, that being the most probable site implementation. Different combinations from the range of input variables listed in Table 2-3 were used in the primary analysis.

The results of a selected set of computer runs using these input data are shown in Table 2-4. For each value of Delta-F, four different cases of random frequencies were chosen, with the resulting average number of conflicts as shown. The average number of conflicts is also presented in Figure 2-6 for the various values of Delta-F. As expected, more intermodulation products were considered as problems by the computer model as Delta-F was increased.

A figure of note is the percentage of frequency sets which have a minimum number of conflicts. Conflicts will always result since the model performs the 2f frequency tests on the emergency frequencies of 121.5 MHz and 243.0 MHz. Because there are other possible 2f intermodulation products which do not include the emergency frequencies which may be noted as problems, the test was not eliminated.

For the purpose of this analysis, an upper bound of two was chosen as the maximum acceptable number of intermodulation problems present in an acceptable frequency set. The number of frequency sets chosen by the computer which met this criterion is an indicator of the probability of success of the collocation effort. These indicators for 6, 12, 18, and 24 random frequencies are noted in the last column of Table 2-4; they constitute a first approximation of the degree of difficulty of the site collocation problem.

Note in Table 2-4 that for six random frequencies chosen by the model (in addition to the two emergency frequencies), there are at least 86 frequency sets out of the 100 which present no intermodulation problems other than the two 2f problems previously noted with the emergency frequencies. This bounds the collocation problem and indicates that collocation with this number of frequencies is possible if frequency engineering is properly performed to select a set which comes from the 86 or more best sets. This

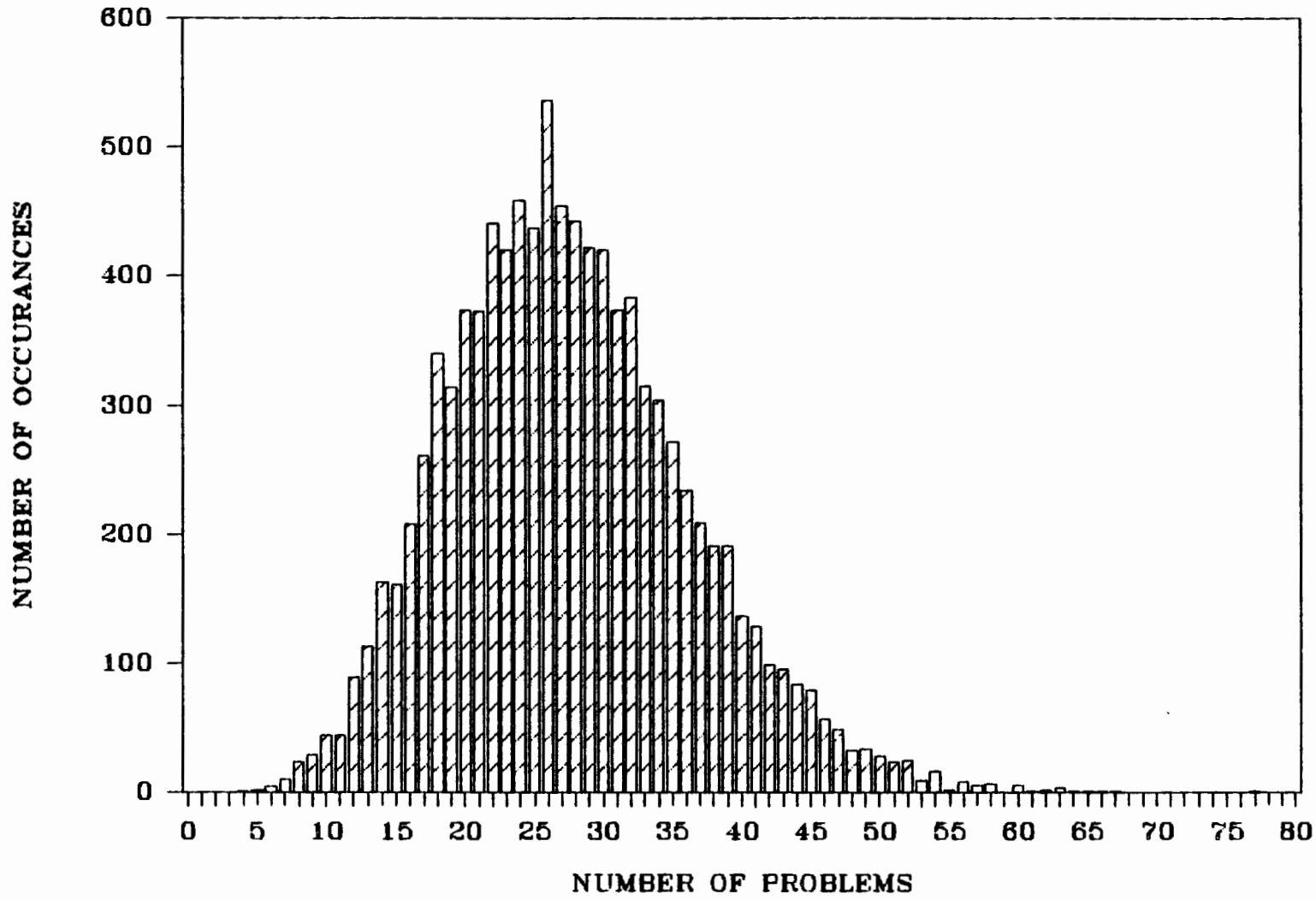

FIGURE 2-5

INTERMODULATION PROBLEMS

TABLE 2-3

STANDARD INPUT VALUES FOR COMPUTER RUNS

Input Parameter	Value
Number of Iterations	100
Delta-F	.1, .05, .02, or .01 MHz
Number of VHF Frequencies	3, 6, 9, or 12
VHF Spacing	1.000 MHz
Number of UHF Frequencies	3, 6, 9, or 12
UHF Spacing	1.500 MHz
VHF Emergency Frequency	121.5 MHz
UHF Emergency Frequency	243.0 MHz
VOR Frequency	108.0-118.0
FM Broadcast	88.0-108.0
Intermodulation Tests	2f - f'
	2f + f'
	f - f'
	f + f'
	2f
	3f

engineering would be performed by the computer programs and tools previously developed and used by the FAA. Good frequency management lessens the occurrence of the second- and third-order products as a problem; it creates the best foundation for the solution of other interference problems that are beyond the scope of this model.

As can also be seen in the presentation of data in Table 2-4, for 12 frequencies, there is a 30 percent chance that a suitable frequency set may be chosen to minimize or eliminate intermodulation problems. The possibility of selecting a set which contains no intermodulation problems for 18 and 24 frequencies does not exist for two values of Delta-F (0.05 and 0.1 MHz). A detailed discussion of the values of Delta-F is necessary here to permit proper interpretation of the data.

Since this model has not been designed to consider directly signal amplitudes of intermodulation products (since the data were not available), the value chosen for Delta-F must have significance in practical terms. A value of 20 kHz was chosen for Delta-F since it corresponds to the -80 dB point in the receiver pass band specification (as defined in Appendix A). This is taken as a worst-case value. A computer model modified to include all data on amplitudes expected for specific transmitters and receivers in chosen scenarios may in fact indicate that fewer

TABLE 2-4

RESULTS FOR STANDARD INPUT VALUES

Delta-F MHz	Number of Random Frequencies	Average Number of Conflicts	Percent of Frequency Sets With <3 Conflicts
.1	6	3	86
	12	5	30
	18	14	0
	24	28	0
.05	6	2	90
	12	4	48
	18	8	8
	24	16	0
.02	6	2	98
	12	2	90
	18	4	50
	24	6	18
.01	6	2	98
	12	2	83
	18	4	47
	24	5	21

problems than those indicated by this model will occur. Those intermodulation products with frequencies closer than 20 kHz to the carrier frequencies were declared to be problems; others were not. A sensitivity analysis was also performed comparing the results of a Delta-F of 10 kHz with those of 20 kHz. While the magnitude of the intermodulation problems changed, as expected, the relative results did not. A Delta-F of 20 kHz was therefore chosen as the key value for the use of the model.

As noted in Table 2-4, the number of available frequency sets which produce no significant problems greatly decreases for large numbers of random frequencies and large values of Delta-F. This is graphically shown in Figure 2-7. At Delta-F = 20 kHz, the opportunity exists (18 percent) to locate a frequency set for 12 VHF and 12 UHF frequencies (plus the emergency channels), which poses no significant second-order or third-order intermodulation problems. However, when the FAA performs a detailed analysis of a possible site implementation and examines the possible sets of frequencies capable of coexisting with other services and broadcast

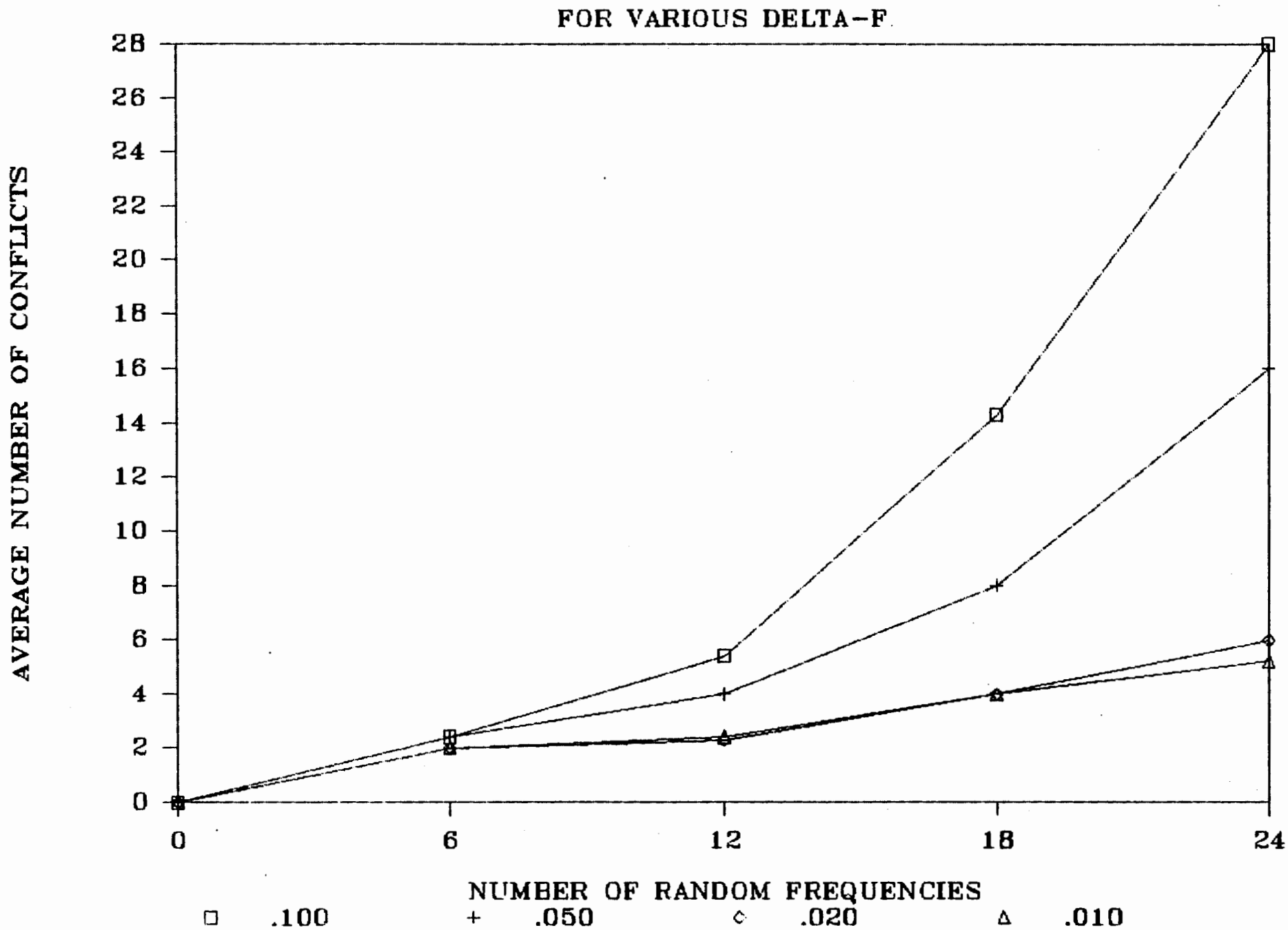

FIGURE 2-6

NUMBER OF CONFLICTS FOR VARIOUS DELTA-F

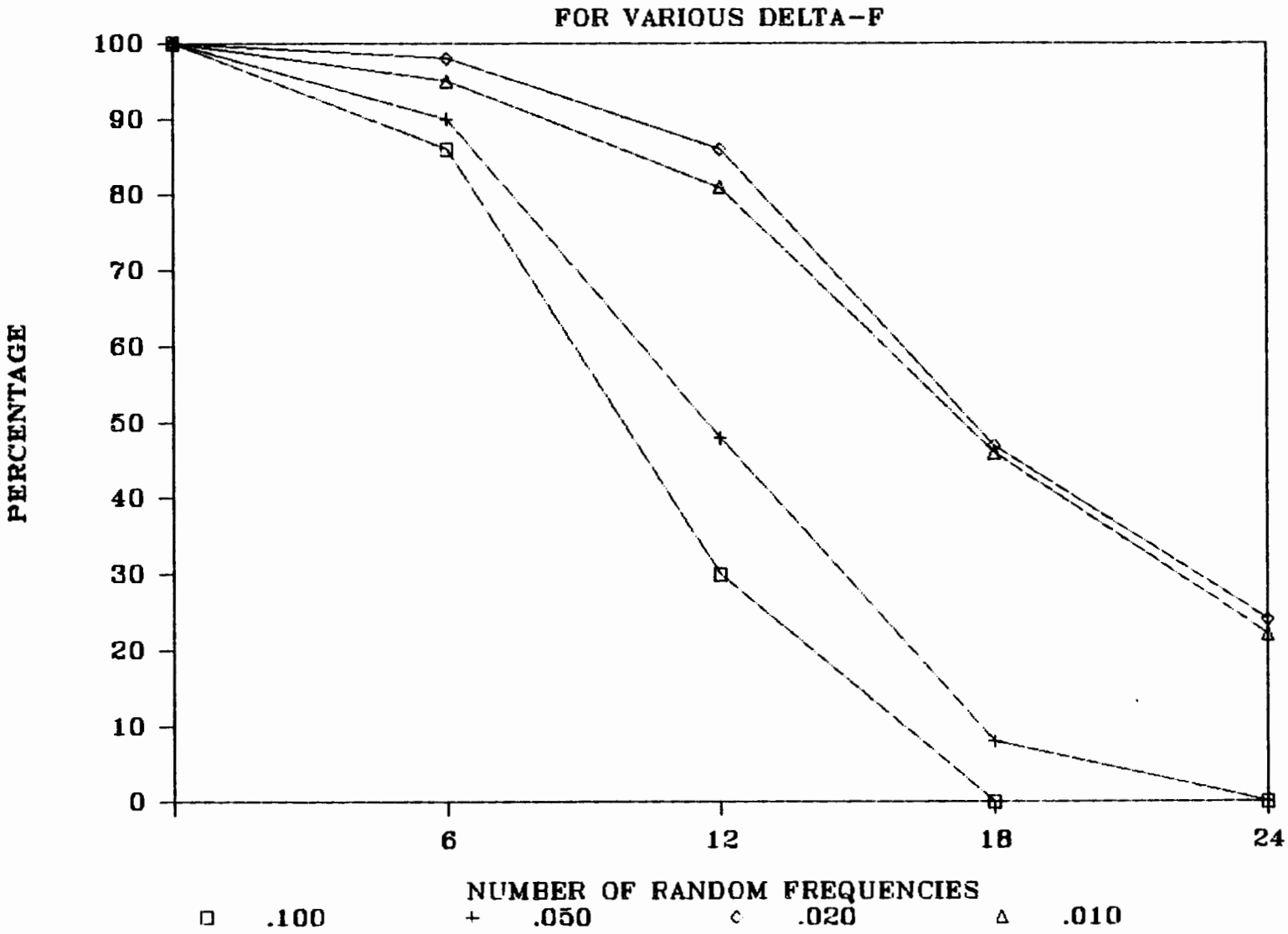

FIGURE 2-7

FREQUENCY SETS FOR VARIOUS DELTA-F

facilities located nearby, then the number of frequency sets practically possible may be greatly diminished. Following is an examination of other potential sources of interference.

2.2.2 FM Interference Results

A broadcast band FM transmitter could possibly be located near the site of the FAA communications facility. This FM signal presents a wideband, potentially high-power interfering source whose interference with a communications site has been simply modeled. In this case, the intermodulation product from the FM broadcast band transmitter has a band of frequencies that it can assume. As a first approximation, the FM bandwidth is assumed to be 50 kHz. A repetition of the previous analysis for Delta-F = 20 kHz with the inclusion of an additional FM frequency yields the results shown in Figure 2-8.

The consideration of an FM frequency increases the average number of intermodulation products. A detailed analysis of the interference would yield a better definition of the complex signal generated, its duration, and the effect of such a signal at a relatively constant amplitude and duration. Such an analysis is beyond the capabilities of this model and beyond the scope of this study. However, the model shows that the addition of a wideband signal can greatly affect the number of offensive intermodulation products. The actual audible effect of the interference, though, will be markedly different for a wideband FM signal than an AM VHF or UHF signal, as previously considered with the other frequencies in the close frequency sets.

2.2.3 VOR Results

A VOR or a VORTAC is another type of signal which may have great impact on the collocation problem. The VOR, though a high-power constant signal with a complex spectrum, can be viewed as an interfering signal, much as another on-site transmitter would be viewed. From the results of the analysis that appears in Figure 2-7, it can be seen that the VOR does create additional problems. However, it does not contribute the same magnitude of problems as the FM signal, due to the narrowband nature of the VOR signal. What can be drawn from this analysis is that the FM signal and the VOR signal are high-power and constant in nature and have complex intermodulation products that must be taken into detailed account. The FM signal presents a serious (although not insurmountable) problem which must be considered. The VOR presents interference to the communications equipment as a collocated high-power emitter which is also potentially affected in its operation as a navigation facility by the communications equipment. This quick-look analysis indicates that such a location produces significant problems from an intermodulation aspect. Other difficulties with such an implementation are explored in greater detail in Chapter Three.

Despite its limitations in scope, the computer model does represent a powerful tool for presenting a quick-look analysis of intermodulation products and the problems which they can cause. The feasibility issue has

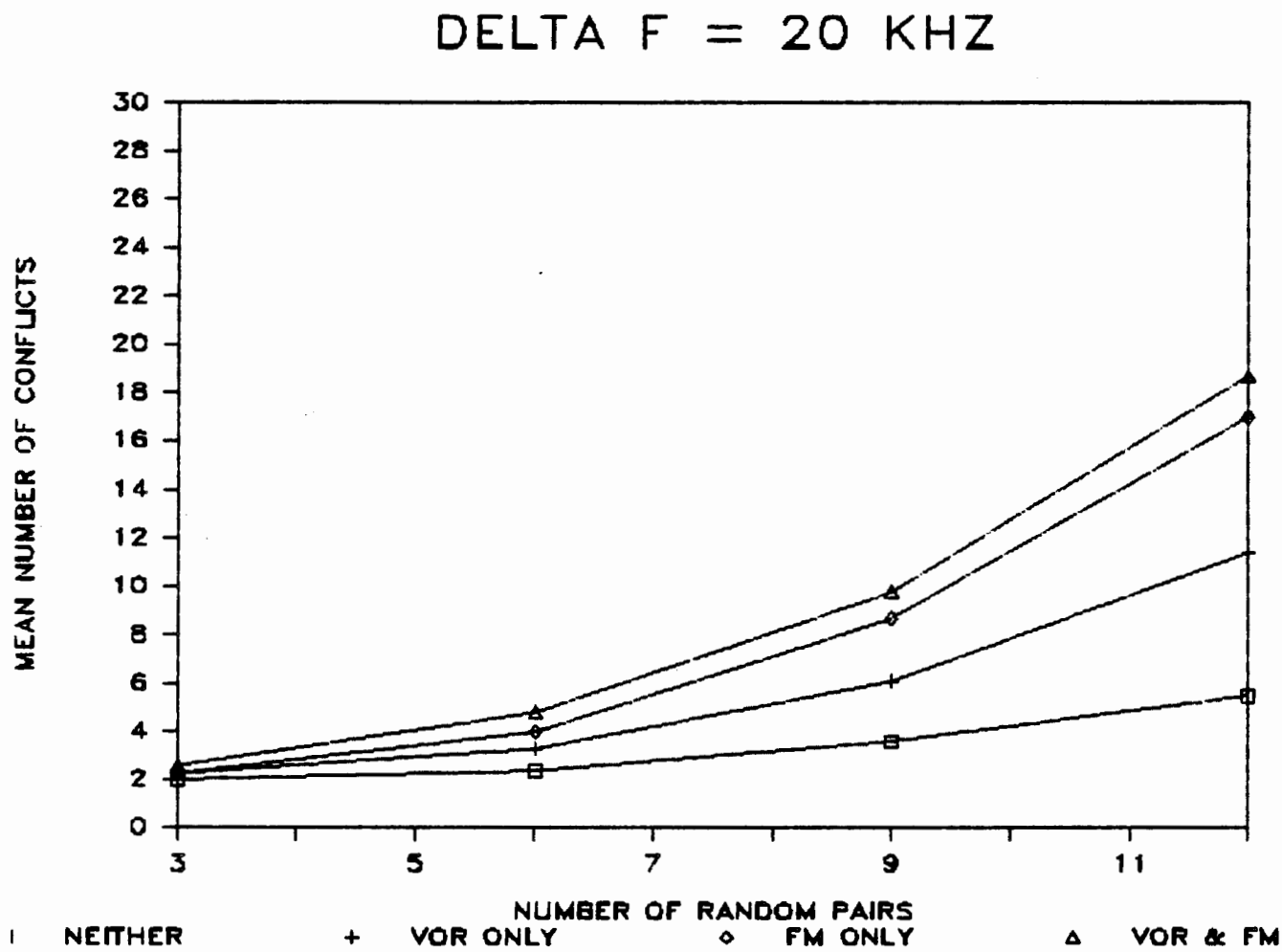

FIGURE 2-8

FM/VOR INTERMODULATION PRODUCTS

initially been bounded from an intermodulation point of view. It is feasible to engineer the frequency selection of collocated frequencies to minimize second-order and third-order products which are problems for receivers located on-site.

As a result of this analysis, the collocation of up to 12 frequencies appears highly probable and technically feasible. As the number of frequencies exceeds 12, however, the number of suitable frequency sets decreases dramatically, indicating the increased difficulty with collocation, although technical success is not precluded. Maximum flexibility must be allowed to solve site-specific problems that will further complicate the success of collocation. Chapter Three addresses practical considerations surrounding the use of the best techniques to reduce other interference problems.

CHAPTER THREE

PRACTICAL CONSIDERATIONS FOR CONSOLIDATION AND COLLOCATION

3.1 CONSOLIDATION AND COLLOCATION OF AIR TRAFFIC CONTROL FACILITIES

For many years, the FAA has recognized the economic and operational advantages of collocating VHF and UHF transmitting and receiving facilities; but the transmitters and receivers, reflecting earlier technology, have not been capable of delivering satisfactory performance when collocated. In certain specialized cases, such as mountain-top radar sites, where normal horizontal separation of antennas and isolation of equipment was impossible, extraordinary measures were employed to achieve acceptable performance. This was a significant technological achievement in view of the marginal characteristics of the available transmitters and receivers.

The National Airspace System Plan and various other official planning documents dealing with the communications and navigation requirements of the Air Traffic Control system in the United States, dating to 1970, have predicted a need for the collocation of facilities. Most of the communications equipment in the operational inventory was not suitable for collocation, and the replacement rates (providing new transmitters and receivers) were insufficient to support any widespread collocation effort. Older equipment, not suitable for collocation, would have presented significant engineering problems.

In 1966, the FAA and the Department of Defense jointly supported a project to produce a new family of specifications of VHF and UHF transmitters, receivers, and transceivers that were intended for application in a collocated air traffic control environment. (A copy of the original transmitter and receiver specifications is provided in Appendix A of this report.) This new family of equipment featured exceptional reliability, immunity from power line fluctuations, minimum radiation of harmonics and intermodulation products, and receivers with improved selectivity and excellent dynamic range. New generation communications equipment is still procured with reference to this family of specifications. Such equipment is well suited for collocation, but will require a number of additional components to assure the level of isolation required among the units in a busy air traffic control environment.

Currently, the National Airspace System Plan requires the Federal Aviation Administration to proceed with the collocation of facilities. The overall cost reductions (through the elimination of remote transmitter and receiver sites) continue to attract the attention of system planners. Cost reductions are more impressive when navigation sites (VOR or VORTAC) are included, but the engineering problems associated with such collocations have been largely overlooked by system planners. The following sections present some of the more apparent advantages and disadvantages of collocation in the current environment.

3.1.1 Advantages of Site Consolidation and Equipment Collocation

The relocation of off-airport facilities has been recommended as a means of reducing annual support costs. Some of the areas of expected savings are:

- Reduced costs for off-airport properties
- Reduced costs for off-airport leased communications circuits
- Reduced travel costs for technicians performing maintenance
- Reduced number of facilities requiring backup power
- Reduced security risks associated with off-airport property
- Reduced maintenance manpower requirements

3.1.2 Disadvantages of Site Consolidation and Equipment Collocation

While the advantages of collocation are primarily economic in nature, the disadvantages are primarily operational and technical. They involve the adverse effects of multiple antennas on a small piece of property, the impact of strong transmitted signals on nearby receivers, and the employment of isolation and attenuation devices not previously required on the remotely located facilities. Some of the more significant considerations are:

- Reduced isolation between transmitters and receivers
- More severe intermodulation products
- Increased possibility of interference
- Additional cost of isolation devices
- Transmitter and receiver attenuation due to isolation devices
- Amplifiers required to compensate for filter losses
- Additional cost of collinear (gain-type) antennas

3.1.3 Additional Facts to be Considered

In consolidating a large number of transmitting and receiving facilities within the confines of a small site, few types of interference can be neglected. The design engineer's goal must be the creation of an operating environment totally capable of performing the air traffic control mission, with total system performance achieving the capability of the isolated environment as nearly as possible. Where physical isolation cannot be obtained, electrical isolation must be provided.

Where system performance may be degraded, means must be provided for recovering or restoring the performance. If suitable isolation devices are not currently in the established inventory, they must be obtained, even if some new development may be involved. Some of the facts that must be considered are the following:

- Horizontal separation of antennas may not be sufficient.
- Isolation devices of all types may have to be employed.
- Losses due to filter components may be excessive.
- Compensation for filter losses may require additional antenna gain.
- The interference problem is further complicated by radar, navigation aids, and other sources of interference.
- Interference-free operation requires establishing and maintaining a delicate working relationship with all of the equipment and other sources of radiation.
- Each collocated site will be unique, even though employing standard engineering practices and isolation devices.
- Future frequency changes or additions will require careful planning.

3.2 HARDWARE CONSIDERATIONS

When locating a number of transmitters and receivers on a small piece of real estate, careful attention must be directed toward the selection of operational frequencies. A number of suitable computer programs have been developed for the ready recognition of obvious intermodulation problems, i.e., frequencies that will produce intermodulation products (interference) on the designated operating channels.

Not all of these computer programs will identify receiver image frequency responses or interference developed on the receiver intermediate frequencies (IF). System engineers in the air traffic control service will continue to require the assistance of frequency management resources to avoid the obvious frequency-related interference problems.

In most cases, system engineering also must include a greater amount of isolation than the best transmitters and receivers normally provide. The amount of isolation required, and the number of external devices to be employed, will be determined largely by the number of transmitters and receivers to be collocated.

Besides the transmitters and receivers, system engineers also must consider the various types of isolation devices to be employed, and the types of antennas to be installed as well as the location of those antennas with respect to each other.

3.2.1 Transmitters and Receivers

Tradionally, the ATC system has included a mix of old and new equipment. The older equipment, including both vacuum tube types and transistorized models, reflected designs for 100 kHz channel spacing and lower density installations. These classes of equipment are not suitable for collocation in high-density sites. They should be replaced by their more modern counterparts designed for 25 kHz channel spacing and the rigors of collocated facilities.

The earliest VHF transmitters suitable for collocation included the AN/GRT-18 and AN/GRT-21. Both were developed to satisfy stringent reliability and collocation requirements set down in modern performance specifications. Both equipments included 50-watt linear amplifiers that may be employed with the normal 10-watt exciters for those applications needing greater coverage, or to compensate for the losses encountered in the isolation devices needed for collocation.

New generation equipment must meet stringent collocation specifications and must be phased into service to replace aging devices. For example, older UHF transmitters are not likely to possess the desired reliability, and they tend to complicate management of intermodulation problems inherent in a collocated facility. Older receivers may experience severe degradation of performance when confronted by the combined signals of numerous collocated transmitters. Local oscillator radiation from the older receivers also may cause interference. Even recently manufactured UHF transmitters may not satisfy the stringent collocation requirements of the early specification. These new UHF transmitters should be subjected to a stringent test and measurement program before they are included in the design of a collocated facility.

The earliest VHF receivers developed and manufactured to meet the stringent collocation environment included the AN/GRR-23 and AN/GRR-25. These two receivers possessed the reliability desired, and were designed to operate successfully in proximity with other receivers and transmitters. Their UHF counterpart, the AN/GRR-24, reflected many of the same design features and was developed for the severe collocation environment. All of these receivers (VHF and UHF) were developed for the 50 kHz channel spacing of the present Air Traffic Control system. All accepted an IF

modification module for 25 kHz channel spacing. More recently manufactured VHF and UHF receivers may not satisfy stringent collocation requirements embodied in the original specification. Again, these receivers should be subjected to a test and measurement program before they are included in the design of a collocated facility.

The AN/GRR-( ) and AN/GRT-( ) were developed according to competent performance specifications that included the capability to operate in an inhospitable (unfriendly) environment of high signal density, including radar pulse interference. With an established reliability figure of 10,000 hours MTBF, much of this equipment is nearing the end of its normal service life. New equipment procured for the ATC service should include similar reliability requirements. The original specifications containing the required performance factors for collocation are included in this report as Appendix A and provide the basis for the development of more modern specifications reflecting the same performance capabilities. New equipment should be subjected to a test and measurement program to verify their compliance with current specifications and more stringent present requirements for collocated equipment.

3.2.2 Isolation Devices

Every transmitter and receiver, regardless of design or inherent quality, must have some degree of isolation to achieve satisfactory performance. In a collocated air traffic control facility, geographic isolation is limited by the small dimensions of the site. These dimensions determine the maximum separation distance between antennas, the separation between transmission lines, and the density of installed transmitters and receivers inside the service building. When these dimensions do not provide the isolation required for normal satisfactory performance, additional devices must be employed to increase the electrical isolation between interfering systems. These devices may be regarded as the designer's tools for selective insertion between interfering systems.

The cost of isolation devices is measured in two different dimensions: (1) the number of dollars for procuring the device, and (2) attenuation or signal loss to be experienced with the device installed. For transmitters, signal losses will reduce the effective radiated power (ERP) of the system. For receivers, the losses will reduce the receiver sensitivity. If the accumulated signal losses become excessive, they must be compensated for by other devices to increase system gain, e.g., amplifiers or antennas with more than unity gain. Added amplifiers or antennas then will increase the total dollar cost of the system.

One of the most effective and valuable isolation devices in a collocated VHF/UHF installation is the simple (and passive) low-pass filter (LPF). The second and third harmonics of the VHF transmitter will be attenuated by more than 50 dB at the filter and generally will not be a problem in the UHF receivers. In multiple VHF transmitter installations involving air traffic control, the second and third harmonics will be attenuated and will not figure prominently in the generation of higher

(third, fourth, and fifth) order intermodulation products. In multiple VHF installations, or in combined VHF/UHF installations, the low-pass filter should be engineered into the output of each VHF transmitter, and should be located as close as possible to the output port of the transmitter. Table 3-1 lists prominent second, third, fourth, and fifth order products resulting from only three common VHF sources. Note that the second-order and third-order intermodulation products of VHF frequencies may fall within the UHF band. The low-pass filter, however, will eliminate virtually all of the listed intermodulation products containing a "2f" or "3f" factor.

In collocated VHF/UHF transmitter facilities, a high-pass filter (HPF) is beneficial in each UHF transmitter output. It assures further attenuation of any VHF transmitter signal attempting to reach a UHF transmitter output stage. For suppression of harmonics in the UHF transmitter, a low-pass or a band-pass filter would be more effective; however, the low-pass filter will not attenuate arriving VHF signals, and the band-pass filter usually creates additional power loss into the transmission line. The high-pass filter therefore emerges as a compromise, attenuating the arriving VHF signals but introducing a minimum of transmission loss (on the order of 0.5 dB). The compromise also may include a cavity-type multicoupler, which not only provides excellent band-pass characteristics but also provides a high degree of isolation between the transmitters connected to the multicoupler.

A UHF multicoupler is valuable for collocating multiple UHF transmitters. It provides approximately 60 dB of isolation between transmitters, provides band-pass characteristics to suppress both harmonics and lower frequency intrusions, and permits four UHF transmitters to feed a single antenna. In the most severe collocation sites, such as mountaintop radar installations, the UHF receivers also can use the same antenna connected to the transmitters. This technique is not recommended for standard air traffic control facilities, where it is possible to provide separate receiving antennas with a degree of physical separation.

A VHF multicoupler equal or superior to the UHF CU-547 should be developed and provided to the air traffic control community as an additional tool for collocation. Insertion losses should not exceed 2 dB (0.5 dB desired), with isolation between transmitter input ports in the order of 55 to 60 dB. These design parameters may require the use of large VHF cavities (for high-Q circuits), but will promote the success of high-density collocated VHF/UHF facilities.

When collocating with a VOR facility, or in proximity with a high powered VHF/FM broadcast station, VHF circulators and VHF band-reject cavities may be required. These tools are readily available from established manufacturing sources.

TABLE 3-1

SAMPLE OF SECOND-, THIRD-, FOURTH-, AND FIFTH-ORDER INTERMODULATION PRODUCTS FROM THREE VHF SOURCES

f_1 = 121.5 MHz
f_2 = 132.0 MHz
f_3 = 126.0 MHz

Second-Order Products

$2f_1$ = 243.0 MHz UHF Emergency
$2f_2$ = 264.0 MHz
$2f_3$ = 252.0 MHz
$f_1 + f_2$ = 253.5 MHz
$f_1 + f_3$ = 247.5 MHz
$f_2 + f_3$ = 258.0 MHz

Third-Order Products

$2f_1 + f_2$ = 275.0 MHz
$2f_1 - f_2$ = 111.0 MHz VOR
$2f_2 + f_1$ = 385.5 MHz
$2f_2 - f_1$ = 142.5 MHz
$2f_3 - f_1$ = 130.5 MHz
$2f_3 + f_1$ = 373.5 MHz
$2f_3 - f_2$ = 120.0 MHz
$2f_3 + f_2$ = 384.0 MHz
$2f_1 + f_3$ = 369.0 MHz
$2f_1 - f_3$ = 117.0 MHz VOR
$2f_2 + f_3$ = 390.0 MHz
$2f_2 - f_3$ = 138.0 MHz
$f_1 + f_2 + f_3$ = 379.5 MHz

Fourth-Order Products

$2f_2 + f_2 - f_3$ = 259.5 MHz
$2f_1 + f_3 - f_2$ = 237.0 MHz
$2f_2 + f_3 - f_1$ = 268.5 MHz
$2f_3 + f_2 - f_1$ = 262.6 MHz
$2f_3 + f_1 - f_2$ = 241.5 MHz
$2f_1 + f_2 - f_3$ = 249.0 MHz

Fifth-Order Products

$2f_1 + 2f_2 - f_3$ = 381.0 MHz
$2f_1 + 2f_3 - f_2$ = 363.0 MHz
$2f_3 + 2f_2 - f_1$ = 394.5 MHz
$3f_1 + f_2 - f_3$ = 370.5 MHz
$3f_2 + f_1 - f_3$ = 391.5 MHz
$3f_3 + f_1 - f_2$ = 367.5 MHz
$3f_1 + f_3 - f_2$ = 385.5 MHz
$3f_1 - f_2 - f_3$ = 106.5 MHz VHF/FM
$3f_2 - f_1 - f_3$ = 148.5 MHz
$3f_3 - f_1 - f_2$ = 124.5 MHz
$3f_1 - 2f_2$ = 100.5 MHz VHF/FM
$3f_1 - 2f_2$ = 112.5 MHz VOR
$3f_2 - 2f_1$ = 153.0 MHz
$3f_2 - 2f_3$ = 144.0 MHz Amateur
$3f_3 - 2f_1$ = 135.0 MHz
$3f_3 - 2f_2$ = 114.0 MHz VOR

3.2.3 Antennas

In the collocated environment, a minimum number of antennas on the site is desired. The application of 6- or 12-channel active receiver multicouplers should enable all VHF receivers to use a single antenna, and all UHF receivers to use a single antenna. Isolation devices should then be required on only one VHF receiver transmission line and on one UHF receiver transmission line. The active multicoupler should have a large dynamic range and should provide a high degree of isolation between individual receivers. In a typical collocated VHF/UHF installation, the active multicoupler may be operated at a unity-gain level; however, gain may be available if it should be needed.

In the more difficult installations, where the application of multiple isolation devices has attenuated the transmitter output below the desired radiation level, it will probably be necessary to employ a vertical antenna with gain. This approach is more economical than an increase in transmitter power beyond the standard 50-watt amplifier.

In most installations, the standard VHF vertical dipole antenna will be adequate for both transmitters and receivers. In those installations employing multiple isolation devices, and therefore incurring excessive losses, it would be beneficial to employ a VHF antenna with inherent gain. While such antennas are not common to the air traffic control environment, they represent a valuable tool for application in those circumstances where they are needed. The gain-type antenna (preferably of collinear construction) would be more economical than an increase in transmitter power beyond the standard 50-watt amplifier.

To achieve a greater degree of electrical isolation between antennas than can be obtained by horizontal separation alone, a number of antenna mounting structures providing vertical separation would be beneficial. These structures should be constructed of dielectric (nonconducting) material of sufficient strength to resist the effects of ice and wind loading, and readily adaptable to the mounting of common VHF and UHF antennas. The normal installation should be compatible with the platform of existing antenna support structures (towers), with provisions for rotating or lowering the dielectric structure to platform level for easy antenna inspection, maintenance, or replacement. The dielectric structure should provide for a vertical separation of not less than ten feet between the upper and lower antennas.

3.3 A BASIC APPROACH TO COLLOCATION

Some of the earliest, and mostly unsatisfactory, collocation efforts involved communications for ground control approach (GCA) units, mobile RAPCONs, and self-sufficient air traffic control towers. Antennas typically were too close to provide sufficient isolation, and the transmitters and receivers were not well suited to a high-interference environment. Among the common complaints were receiver desensitization, numerous intermodulation products, audio distortion, and channel cross-talk. From this

background of collocation problems came the development of improved performance specifications for equipment to be used in the Air Traffic Control system.

The complications and complexities of collocation increase sharply with the number of transmitters and receivers to be collocated. Isolation devices may be employed as building blocks. For the collocation of small numbers of transmitters and receivers, few devices will be required. Increasingly large numbers of isolation devices become necessary as the numbers of transmitters and receivers is increased.

For purposes of illustration and clarity, a sample site configuration (see Figure 3-1) has been prepared, making use of four antenna supports in a square configuration not less than 65 feet on each side, with an equipment building in the center. (Current FAA procedures specify a minimum separation of 80 feet.) Three of the platforms are employed for mounting transmitting antennas; the fourth platform is dedicated to receiving antennas. One VHF and one UHF antenna are mounted on each platform, vertically separated approximately 10 feet by a dielectric antenna mounting fixture. These basic building blocks are common to all sites, with additional isolation devices employed as the number of transmitters and receivers is increased. Sample configurations have been prepared for three, six, nine, and twelve transmitters and receivers on each band (VHF and UHF).

Existing buildings at some locations may not physically be of sufficient size to house the collocated transmitters and receivers, along with their additional isolation devices. This problem will be especially troublesome on the sites with more collocated frequencies, especially where cavity-type multicouplers or band-reject cavities may be required. The enlargement or expansion of an existing building usually will be more economical than the construction of a new facility. Each site requires a separate engineering survey to define work to be accomplished.

3.3.1 Three VHF/Three UHF Channels

This configuration (Figures 3-2 and 3-3) offers little challenge to the design engineer and can easily be accomplished. Each transmitter (Tx) is provided with its own dedicated antenna on one corner of the square, and each pair of antennas (VHF and UHF) is vertically separated by ten feet. Each VHF transmitter is equipped with a low-pass filter; each UHF transmitter is equipped with a high-pass filter. A VHF active multicoupler (M/C) feeds all three receivers (Rxs); the single transmission line from the antenna is fitted with a low-pass filter. A UHF active multicoupler feeds all three UHF receivers; the single UHF transmission line is equipped with a high-pass filter.

3.3.2 Six VHF/Six UHF Channels

The installation of 12 transmitters (six VHF and six UHF) on a small site (Figures 3-4 and 3-5) will justify the employment of additional tools to lessen the proliferation of intermodulation products. The primary

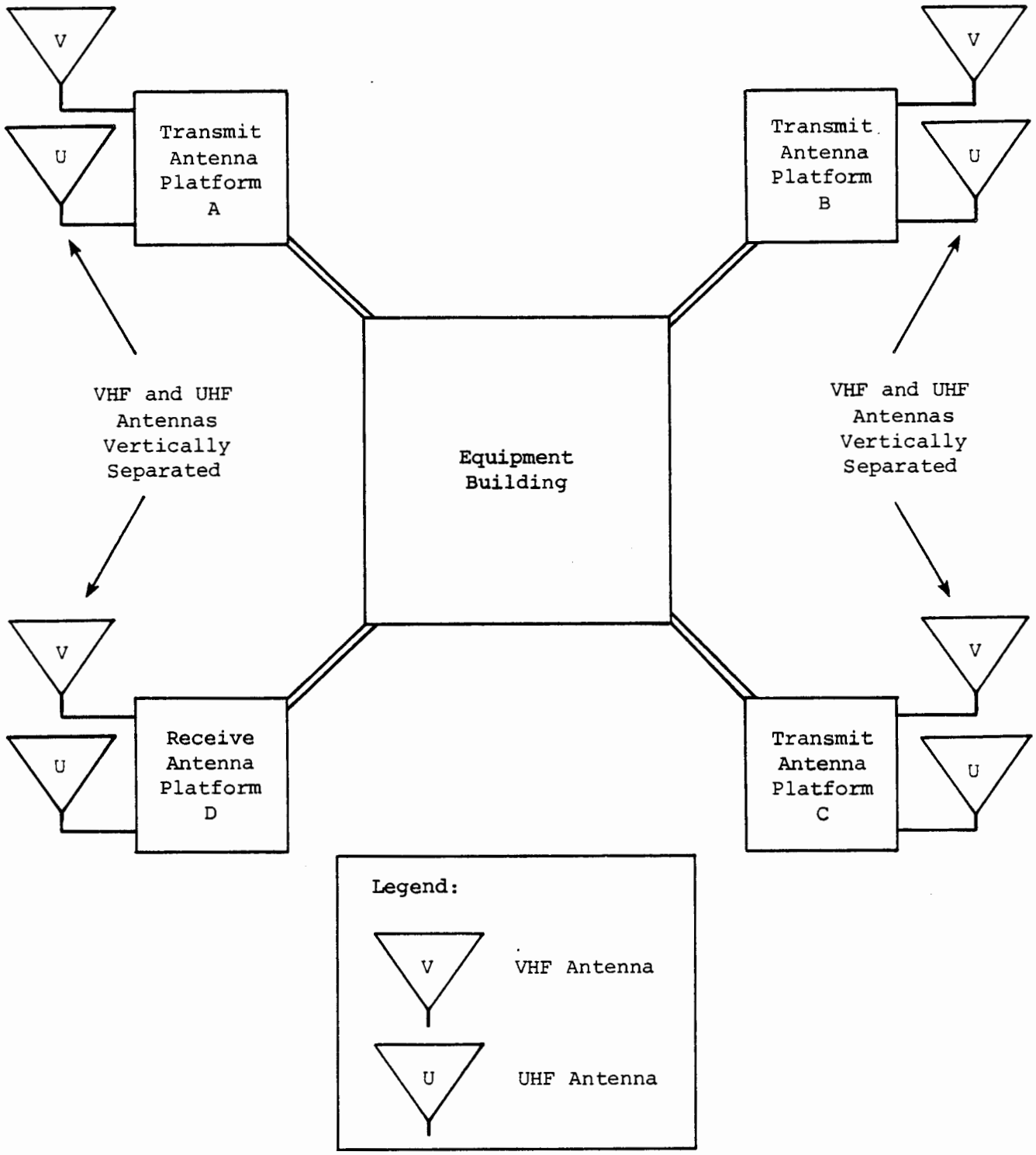

FIGURE 3-1

EIGHT-ANTENNA SAMPLE SITE CONFIGURATION

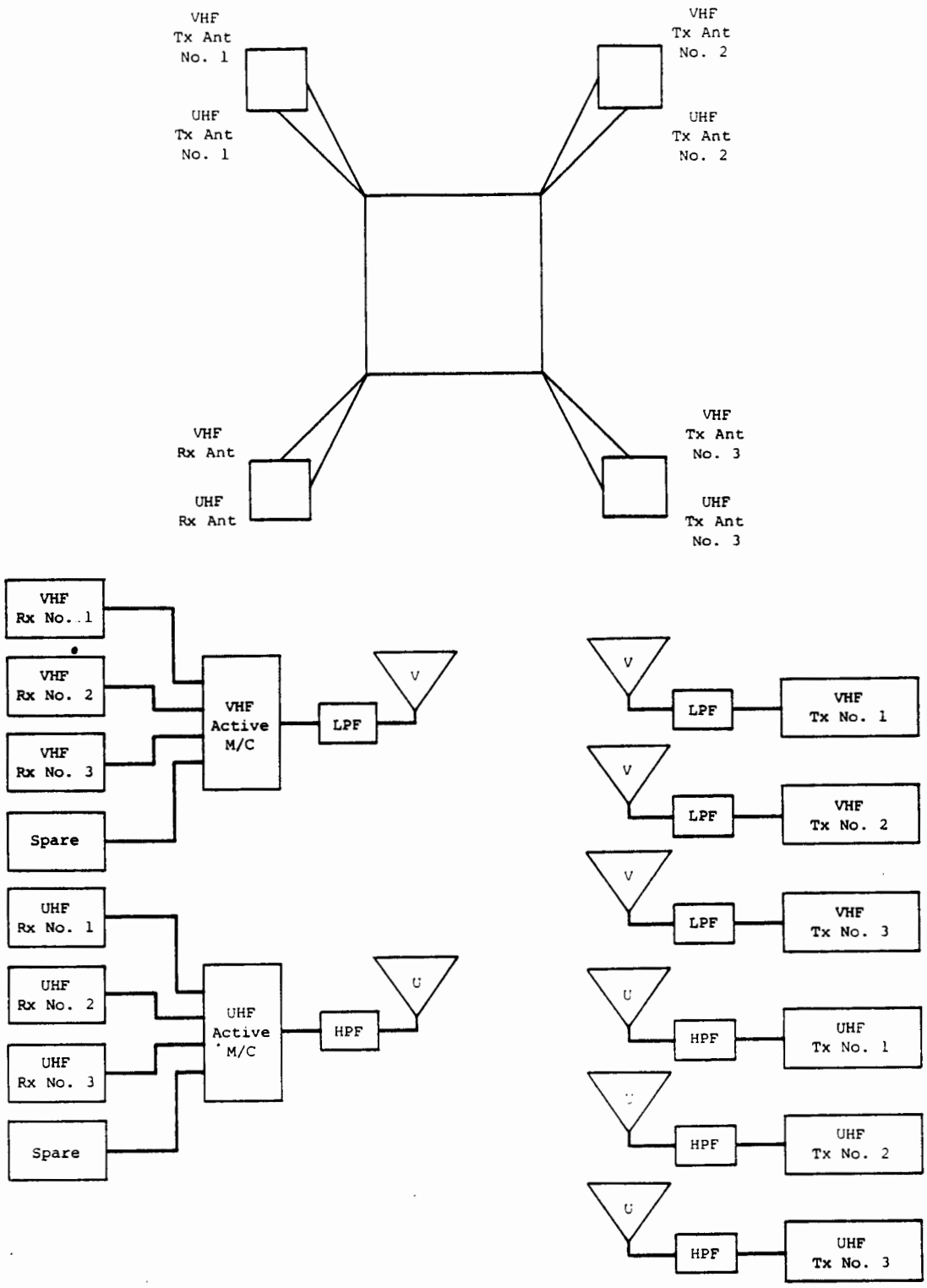

FIGURE 3-2

CONFIGURATION FOR SIX FREQUENCIES

Transmitters

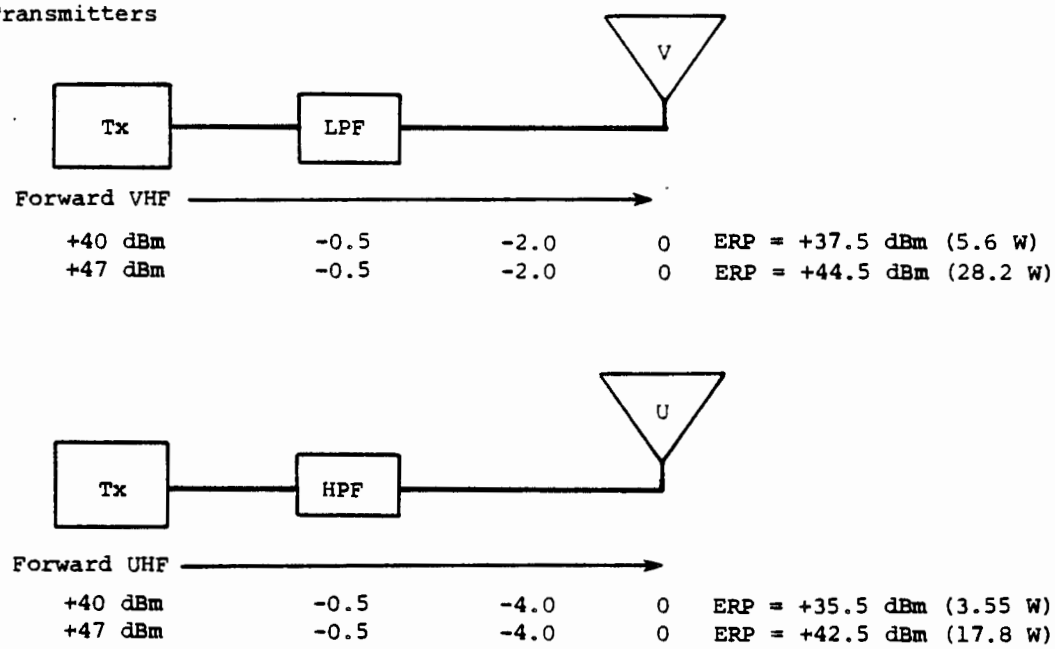

Receivers

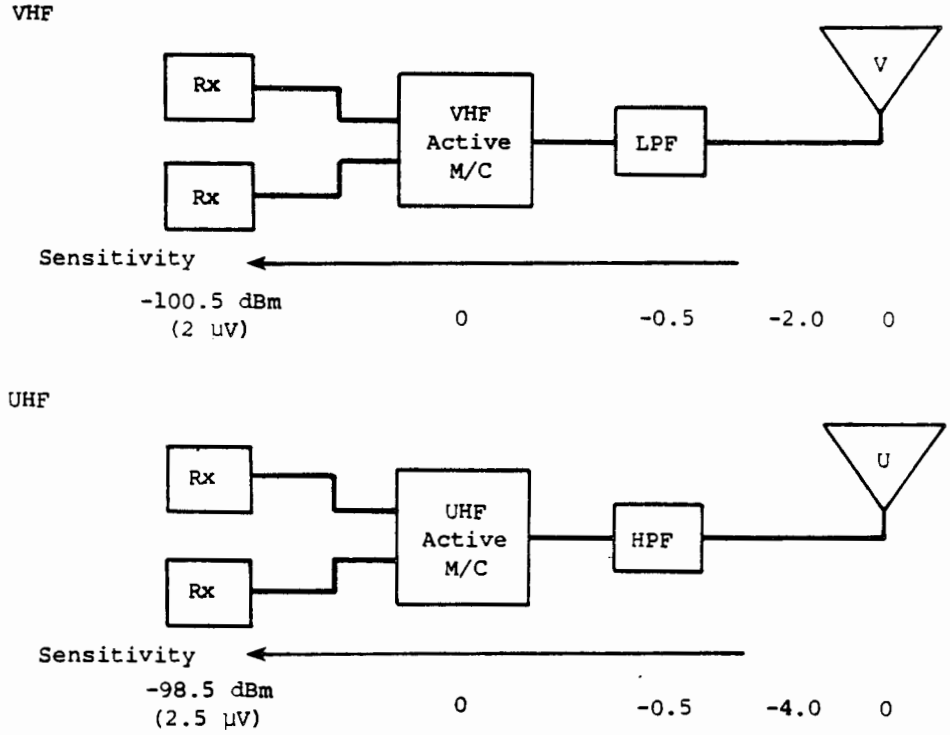

FIGURE 3-3

SIGNAL LOSSES FOR SIX FREQUENCIES

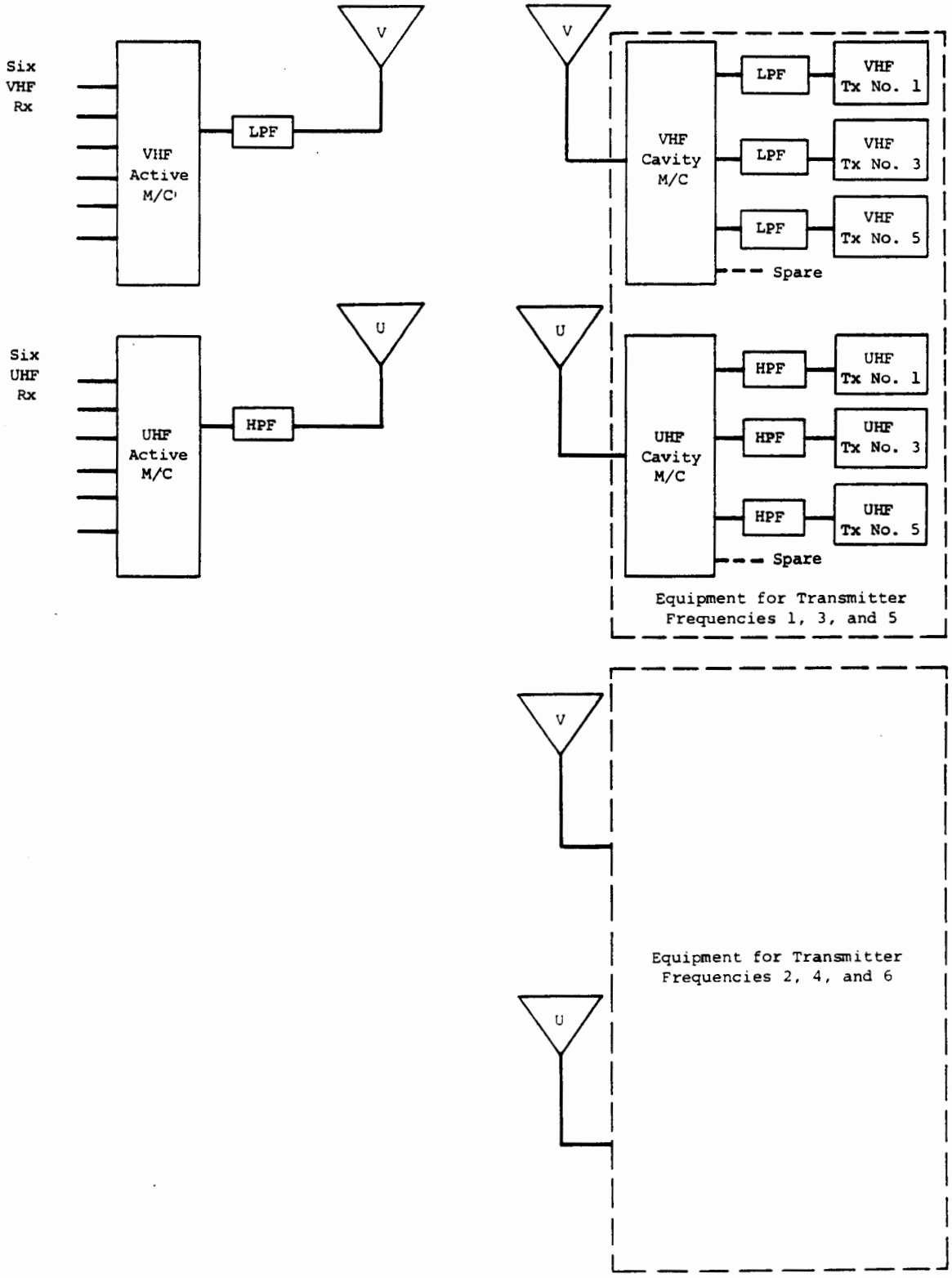

FIGURE 3-4

CONFIGURATION FOR TWELVE FREQUENCIES

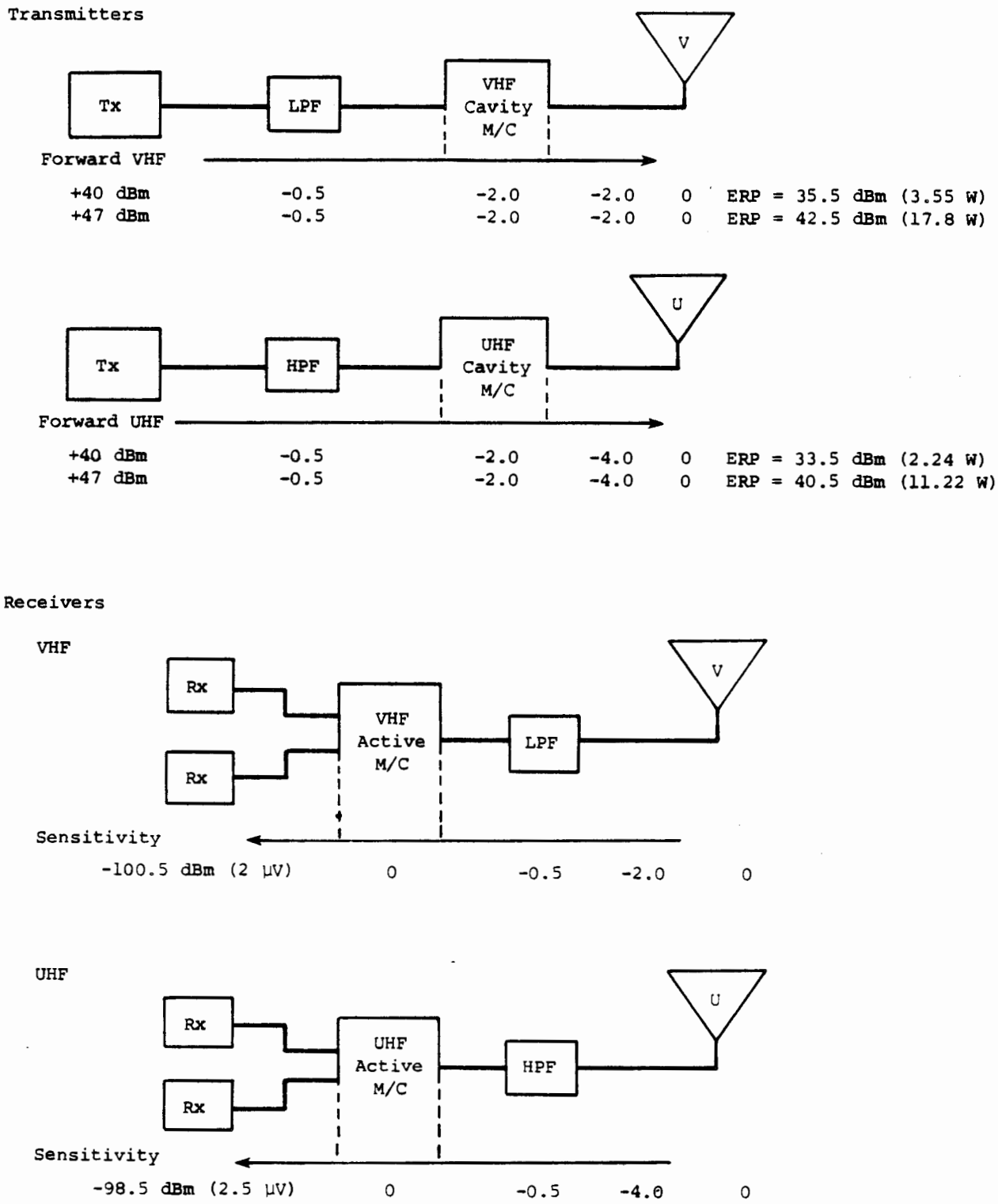

FIGURE 3-5

SIGNAL LOSSES FOR TWELVE FREQUENCIES

addition to the site inventory is a cavity-type multicoupler. For UHF, this may be the well-known CU-547 or an equivalent; for VHF, it is possible that a new device may be required. Electrically, the cavity-type multicoupler does not present a design challenge for either band; however, the cavities are sufficiently large to demand installation space, and will contribute to the crowding of internal equipment on the site. A VHF cavity multicoupler of the same characteristics probably would be floor-mounted or wall-mounted because of the larger cavity size.

Losses associated with additional filters will impact upon the power output from the transmitters, resulting in approximately a 4.5 dB cumulative loss in the VHF system, for an effective radiated power level of 3.5 watts from a 10-watt transmitter. The 50-watt amplifier will produce an effective radiated power of 17.8 watts.

Note that the UHF losses are somewhat greater. Primarily because of transmission line losses, the ERP from a 10-watt UHF transmitter is only 2.24 watts. With the 50-watt amplifier, the ERP is raised to 11.22 watts.

If additional power should be required because of extended range coverage or other factors, it is recommended that an antenna with gain be installed (for either VHF or UHF). An antenna providing 6 dB of gain will raise the ERP to four times the level specified above, whether the 10-watt or 50-watt transmitters are used.

A high degree of sophistication is not required to achieve isolation of the receiving system from either the collocated transmitters or the other receivers. A low-pass filter should be included in the VHF receiver transmission line between the antenna and the multichannel active multicoupler. The multicoupler itself should provide at least 60 dB of isolation between individual receivers.

The UHF receivers reflect approximately the same configuration, except that a high-pass filter is incorporated between the antenna and the active multicoupler. Even with the multicouplers adjusted for no gain, the VHF receivers should deliver a sensitivity of -100.5 dBm (approximately 2 microvolts) and the UHF receivers -98.5 dBm (corresponding to approximately 2.5 microvolts). Increasing the gain of the multicoupler (with some corresponding increase in the noise figure) or installing a gain type antenna on the receiving system should boost receiver performance if required.

When using the available isolation tools in a configuration similar to the graphic illustrations (Figures 3-4 and 3-5), the collocation of six VHF transmitters and six UHF transmitters with corresponding receivers, appears to be entirely feasible. It is recommended that existing computer programs should be employed to avoid the assignment of frequencies producing obvious intermodulation problems.

3.3.3 Up to Twelve VHF/Twelve UHF Channels

Graphic illustrations (Figures 3-6 and 3-7) have been prepared for both nine channels and twelve channels; however, the treatment of both configurations is identical, using the same tools to achieve the necessary electrical isolation between major components.

As noted previously, when a four-channel, cavity-type multicoupler is employed in multiples, maximum isolation between frequencies can be obtained by distributing the operating channels among the multicouplers, rather than "filling" one multicoupler and moving to the next. For example, if the operating frequencies are arranged according to their increasing numerical value, frequency number one would be assigned to the first multicoupler, frequency number two to the second multicoupler, etc. As reflected in the graphic illustration for nine frequencies, (Figure 3-6) frequencies 1, 4, and 7 would appear on the first multicoupler; frequencies 2, 5, and 8 would be assigned to the second multicoupler; and frequencies 3, 6, and 9 would be connected to the third multicoupler.

The illustration for 12 channels reflects the distribution of frequencies for the complete filling of three four-channel multicouplers. From both engineering and operational standpoints, it would be beneficial to employ four of the four-channel multicouplers (assigning three frequencies to each) and maintain an unassigned spare channel in each multicoupler. This arrangement provides additional flexibility for accommodating frequency changes or new frequencies at the collocation site, with minimum impact on those already assigned or those not being changed.

Space requirements may be as severe as the electrical requirements when configuring a high density location. The CU-547 UHF multicoupler should be provided rack space, with sufficient clearance to allow free movement of the hinged front panel (similar to a cabinet door). The multicoupler also should be located as close as possible to transmitters to which it is connected. Because of their large size, VHF cavities (either multicoupler or band-reject types) should be either floor-mounted or wall-mounted. These cavities also should be located as close as possible to their corresponding equipment. Additional study at each location will be required to produce a suitable site layout and some building modification or expansion may well result.

3.4 COMPLICATIONS OF COLLOCATING WITH VOR

The collocation of communications equipment with a VOR represents a significant technical challenge. A multi-frequency communications site may require extensive engineering to ensure acceptable functioning of all equipment. The installation of a VOR by itself also may require extensive site-specific engineering that does not always guarantee the commissioning of the VOR without restrictions on certain radials. The combination of both into one site for navigation and communications creates a union which

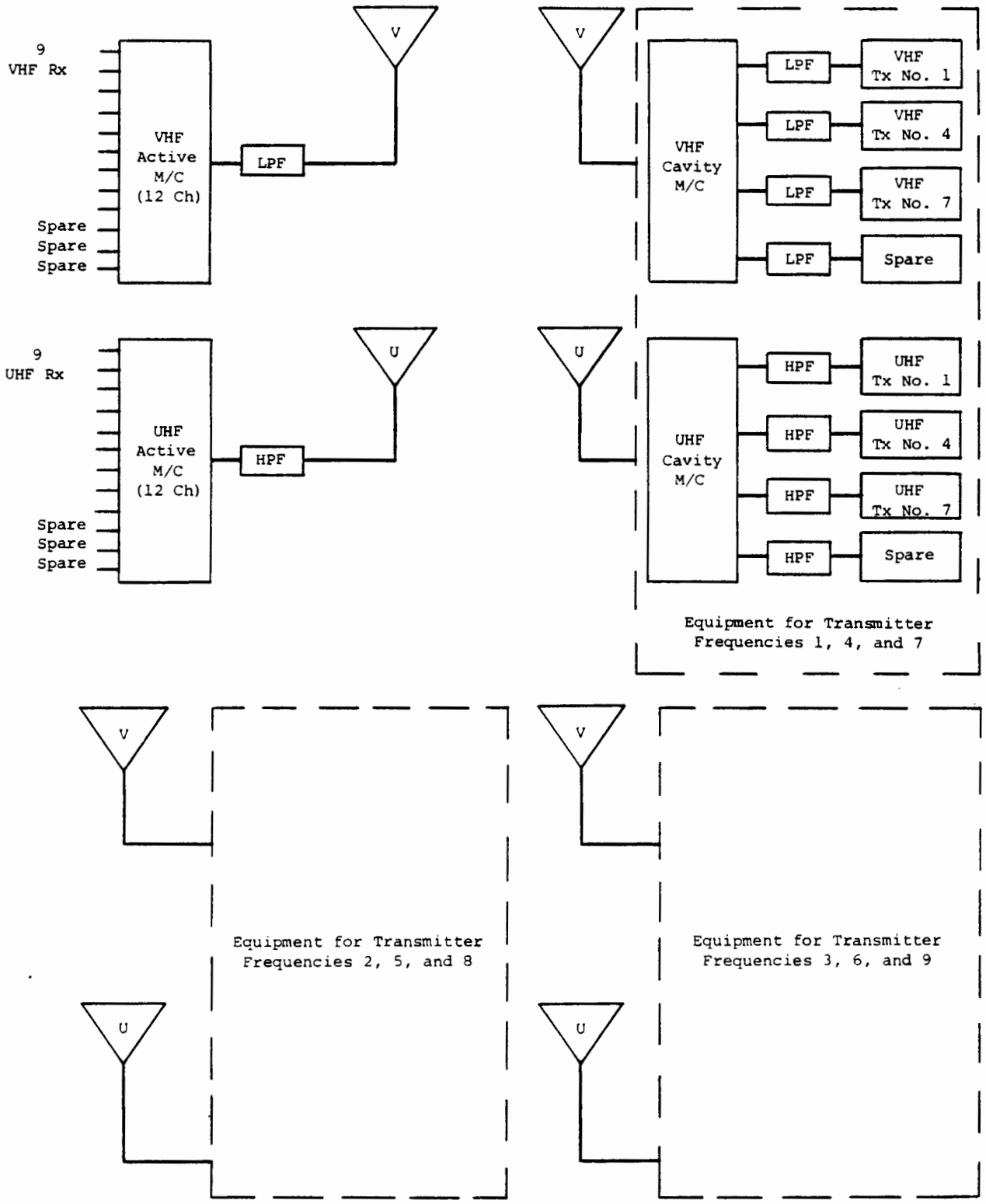

FIGURE 3-6

CONFIGURATION FOR EIGHTEEN FREQUENCIES

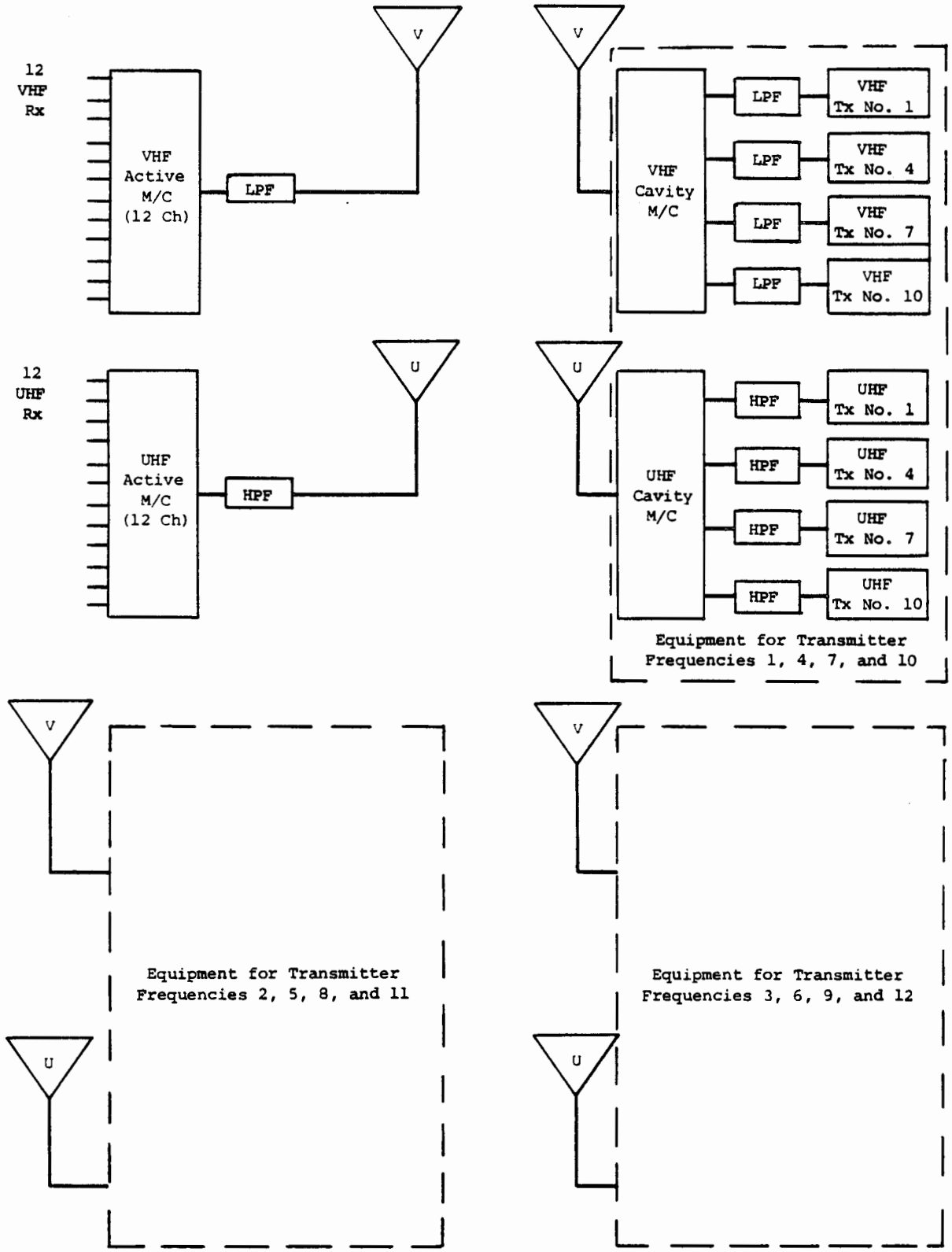

FIGURE 3-7

CONFIGURATION FOR TWENTY-FOUR FREQUENCIES

may force compromises in both functions, some of which may not be acceptable. Therefore, a detailed analysis must be performed to determine the probability of success of such a collocation endeavor before significant resources are expended on the creation, expansion, or modification of a site.

The graphic illustration of a collocated VHF/UHF air traffic control communications site with a 200-watt VOR provides a cross-section of the problem to be confronted (see Figure 3-8). The VOR represents a strong signal in close proximity to the VHF and UHF transmitting and receiving antennas. The communications antennas are undesirable obstructions in the radiating field of the VOR antenna. Both problems must be confronted, and system compromises must be recognized and reduced to some acceptable minimum. The facilities also must satisfy a commissioning flight inspection after all the compromises have been negotiated and installed.

3.4.1 Additional Isolation Techniques Required

The same basic configuration used for collocating up to 12 VHF and 12 UHF channels should be regarded as the starting point for collocating with a VOR station. This includes a high-pass filter and a cavity-type multicoupler for the UHF channels, along with a low-pass filter with a cavity-type multicoupler for the VHF channels.

Besides these basic tools, the VHF transmission line may require the insertion of a ferrite circulator, to attenuate the amplitude of the VOR signal entering the VHF transmission system (see Figure 3-9). The circulator will attenuate the VHF communications transmitters by approximately 0.5 dB in the forward direction, but will attenuate the VOR signal more than 20 dB in the reverse direction. The combined attenuation of the ferrite circulator and the VHF cavity-type multicoupler should be sufficient to reduce the amplitude of all interfering VHF signals to an acceptable level.

In the receiver installation (Figure 3-10), two additional isolation devices are shown in the graphic illustration of the VHF system. A ferrite circulator similar to that in the transmission system is employed to attenuate or reject any signal (intermodulation product) emanating from the receiving system. In addition to the ferrite circulator, a band-reject cavity has been inserted ahead of the active multicoupler specifically to attenuate the VOR signal. This band-reject cavity will reduce the impact of the VOR on the VHF communications receivers, and also will prevent the radiation of any intermodulation product on the VOR frequency. The ferrite circulator will provide an additional 20 dB of attenuation for any signal attempting to travel outward on the receiver transmission line.

The UHF receiving system also has been equipped with a ferrite circulator, because of the high (200-watt) power level of the VOR, and the possibility of even a low level intermodulation product that could be radiated on the VOR frequency. The high-pass filter and the ferrite circulator should be sufficient for attenuating any VHF signals (including VOR band) that may emanate from the UHF receiving system.

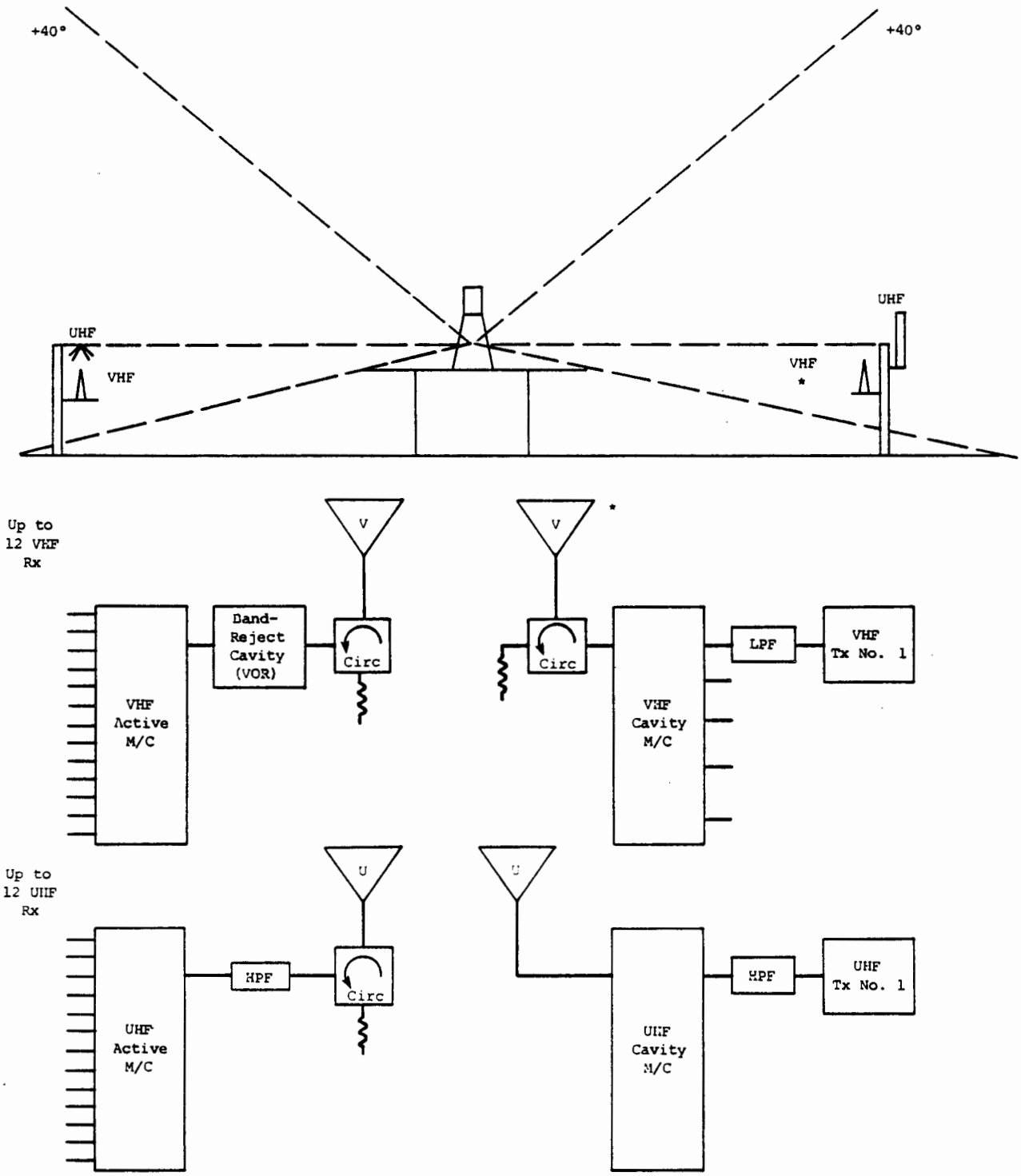

FIGURE 3-8

CONFIGURATION FOR TWENTY-FOUR FREQUENCIES WITH A VOR TRANSMITTER

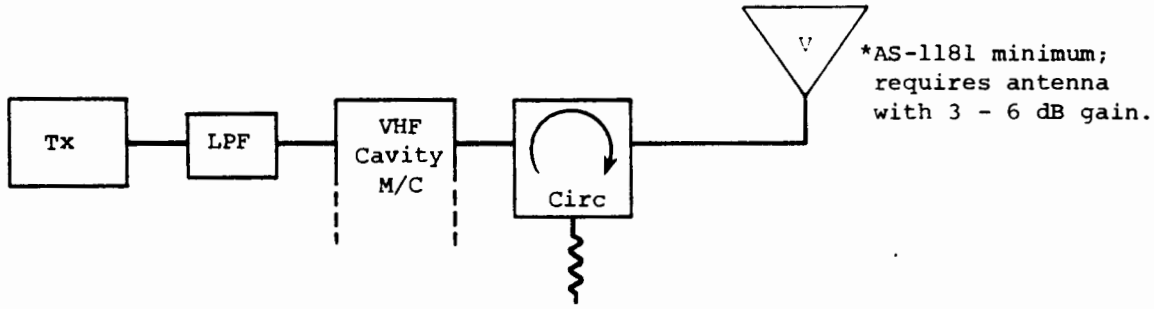

Forward VHF						
+40 dBm	-0.5	-2.0	-0.5	-2.0	0	ERP = +35 dBm (3.16 W)
+47 dBm	-0.5	-2.0	-0.5	-2.0	0	ERP = +42 dBm (15.85 W)
Reflected VHF				>5 MHz ± f_o		
(-72.5 dB)	-0.5	-50.0	-20.0	-2.0	0	
Reflected UHF						
(-149.0 dB)	-50.0	-60.0	-25.0	-4.0	-10	

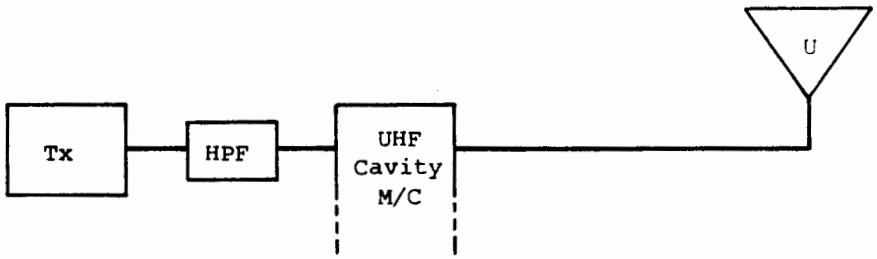

Forward UHF					
+40 dBm	-0.5	-2.0	-4.0	+6.0	ERP = +39.5 dBm (8.9 W)
+47 dBm	-0.5	-2.0	-4.0	+6.0	ERP = +46.5 dBm (44.7 W)
Reflected VHF					
(-122.0 dB)	-50	-60	-2.0	-10	
Reflected UHF			>5 MHz ± f_o		
(-58.5 dB)	-0.5	-60	-4.0	+6.0	

FIGURE 3-9

TRANSMITTER SIGNAL LOSSES FOR TWENTY-FOUR FREQUENCIES WITH A VOR TRANSMITTER

VHF

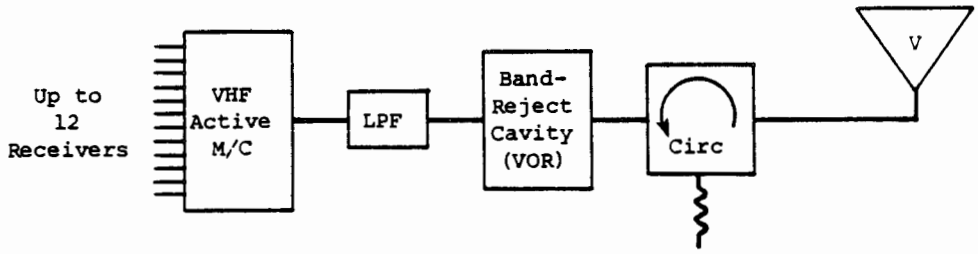

Net Sensitivity							
-100 dBm (2.2 μV)	0	-0.5	-0.5	-0.5	-2.0	0	
Reflected VOR						>5 MHz ± f_o	
	0	-0.5	-70	-20	-2.0	0	(-92.5 dB)
Reflected VHF							
	0	-0.5	-0.5	-20	-2.0	0	(-23.0 dB)
Reflected UHF							
	0	-50	-0.5	-25	-4	-10	(-89.5 dB)

UHF

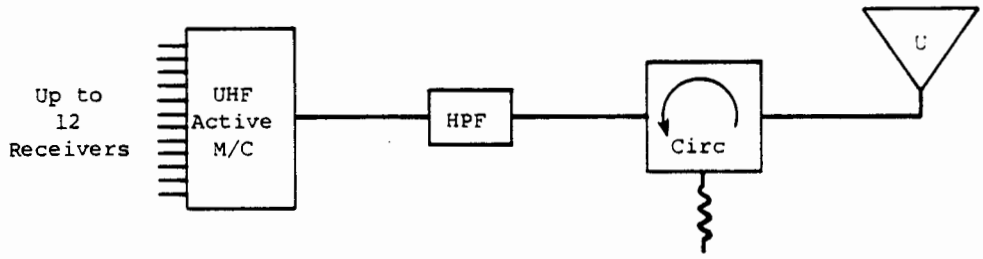

Net Sensitivity						
-98 dBm (2.8 μV)	0	-0.5	-0.5	-4.0	0	
UHF Reflected						
	0	-0.5	-25	-4.0	0	-29.5 dB
VHF Reflected						
	0	-50	-20	-2.0	-10	-82 dB

FIGURE 3-10

RECEIVER SIGNAL LOSSES FOR TWENTY-FOUR FREQUENCIES WITH A VOR TRANSMITTER

3.4.2 Antenna Considerations

When collocating a multichannel communications facility with a VOR, the communications antenna complex must be designed and installed in a manner that does not preclude the commissioning of the VOR facility. The structural steel towers normally used as antenna supports at air traffic control transmitter and receiver sites would be major obstructions if installed at a VOR site. These towers probably would impact the course structure of the VOR sufficiently to preclude commissioning the facility.

The VOR radiates a horizontally polarized signal, while antennas used for air traffic control communications require vertical polarization. When installing communications antennas at or near a VOR facility, care must be exercised to avoid any horizontally polarized components that could intercept and reradiate the VOR signal.

The VOR typically radiates a navigation signal structure from a negative angle tangent to the counterpoise (below the horizon) to a vertical angle approximately 40 degrees above the horizon (see Figure 3-8). Signal energy radiated below the horizon is subject to ground reflection, and is responsible for many of the course errors and anomalies that complicate the creation of a smooth and uniform radio course structure. Any significant reflections above the horizon usually cannot be tolerated.

For minimum impact on a collocated VOR and minimum coupling between antennas, the communications antennas should be installed either below the radio horizon or above the +40 degree angle of the radiation pattern. In either case, the support structures, should be constructed of dielectric material. Wood utility poles, frequently used for such applications, are not ideal, since they require either the use of pole-climbing equipment by installers and maintenance technicians, or the installation of steps on the poles. Metal steps are undesirable, since they are horizontally polarized. A portable lift (cherry picker) could be used to accomplish maintenance on the communications antennas, but it would cause a shutdown of the VOR while the vehicle is parked or engaged on the site. As a compromise, it is desirable to develop a short dielectric structure that can be mounted on the periphery of the VOR site (as illustrated in the sketch), with a collinear UHF antenna mounted approximately at the VOR horizon, and a collinear VHF antenna below the VOR horizon (see Figure 3-8).

This compromise antenna configuration will lessen the impact on the VOR signal structure, and in most cases will deliver satisfactory service in the communications mission. The receiving antennas should be mounted on the same type of dielectric structure. Both transmission lines should be fitted with a ferrite circulator to prevent reradiation of the VOR signal or the transmission of any intermodulation products.

3.4.3 Total Impact on Both Facilities (VOR and ATC Communications)

If the communications antennas on the VOR site are mounted on dielectric structures, and maintain a profile on or below the horizon, as seen by the VOR antenna, the total impact on the radiation pattern of the VOR

should not complicate the unrestricted commissioning of the navigation facility. Obviously, the restricted height of the communications antennas will have some impact on their low altitude coverage, which may affect their unrestricted commissioning.

During the selection of locations for mounting the communications antennas, the most important primary geographic areas of coverage should be determined. If the VOR will be located on a federal airway, the antennas and their supports should be programmed for locations providing the least restrictions along the airway. If using the "square" installation of four antenna structures (as in the graphic illustrations), two sides of the square should be parallel to the primary airway to minimize the shadow effect cast by the building.

Within the VOR building, some crowding of equipment may occur. However, direct radiation between equipments should not be a problem, if all transmitters and receivers were developed and produced according to specifications for collocated air traffic control devices. The cavity-type VHF multicouplers probably should be mounted on the walls of the structure even though the UHF multicouplers will be rack- or cabinet-mounted. VHF transmitters should be mounted near the multicoupler to which they are connected; the same procedure should be followed for the UHF transmitters.

For maximum transmitter/receiver isolation, one side of the VOR building should be reserved for the radio receivers and their active multicouplers. Transmission lines should be kept as short as possible, both for minimizing losses and minimizing the coupling between lines. Transmission lines destined for each of the four antenna structures should not be intermingled in raceways, cable ducts, or conduits. They should maintain separate routes to their departure points from the building.

As previously mentioned (Section 3.1.1), there are many economic advantages to collocation of equipment, including the collocation of communications equipment with navigation equipment (as in a VOR). There are technical disadvantages (as detailed in Section 3.1.2 and others) which must be examined on a configuration-by-configuration basis to determine the feasibility and practicality of the success of collocation. There is great technical difficulty in collocating a VOR with up to 12 channels of VHF radio and 12 channels of UHF radio. However, if collocation is pursued, the class of equipment in the current inventory, together with isolation devices now available or under development, will enable the FAA to collocate and operate the facilities in a satisfactory manner. Losses to be sustained in the isolation devices will be compensated by use of high gain antennas, more powerful amplifiers, or both.

As an added precaution, the communications frequencies employed at the site should not produce any calculable intermodulation products on the frequency of the VOR. In addition, the VOR frequency should be entered into the same computer exercise with the communications frequencies to avoid intermodulation products on the air traffic control channels.

Frequency changes at such a collocated VOR/communications station must be approached cautiously, and will require exercising the same computer program. Physical changes (equipment, antennas, transmission lines, etc.) during the life of the site also must be approached cautiously, to avoid the introduction of new problems.

3.5 COMPLICATIONS OF COLLOCATION PLUS VHF/FM BROADCAST STATION

When considering the collocation of communications equipment with an FM broadcast station (operating between 88 and 108 MHz), a different set of problems may arise. The dominant interference will be the FM on the FAA communications channel. The site configuration for the communications equipment will not change (see Figure 3-11), but great attention must be paid to alleviating the many possible opportunities for interference from the FM station.

VHF/FM stations exist in all power classes. The most powerful stations may radiate a signal as high as 100 kW ERP (+80 dBm). Because of antenna height limitations in the proximity of airports, a VHF/FM station probably will not be located within one mile of an air traffic control communications facility installed on the airport. For purposes of this assessment, a VHF/FM power level of 100 kW located at a distance of one mile from the airport has been assumed. With a free space path loss of approximately 80 dB, the VHF/FM signal will appear at a level of approximately 0 dBm at the ATC facility. This is approximately the interfering signal level encountered with the collocated VOR; therefore, it can be treated in a similar manner. Greater power levels and reduced separation distances may require additional effort to achieve acceptable isolation of the collocated equipment.

3.5.1 Techniques Required for Isolation

The graphic illustration for treating VHF/FM station interference (see Figure 3-11) reflects the same techniques and devices prescribed earlier for the collocation plan with a 200-watt VOR station. A ferrite circulator should be located in each transmission line except for the UHF transmitters (see Figure 3-12). Especially in the VHF transmitter system the circulator will attenuate the arriving signal more than 20 dB before it encounters any other component. In the transmitter cavity-type multicoupler, the interfering signal will be rejected by the high-Q cavities (attenuated more than 70 dB). This should prevent the interfering signal from encountering nonlinear devices in the power amplifier and generating unwanted intermodulation products.

In the VHF receiving system (see Figure 3-13), it may be necessary to employ a band-reject type of cavity filter, tuned precisely to the frequency of the interfering VHF/FM station. This band-reject cavity will perform approximately the same mission (more than 70 dB of signal attenuation) as the cavity-type multicoupler in the transmitter system. Any reflected power (including intermodulation products) will be attenuated by an additional 20 dB at the ferrite circulator. Higher-order products will also be attenuated by the low-pass filter by an an additional 50 dB.

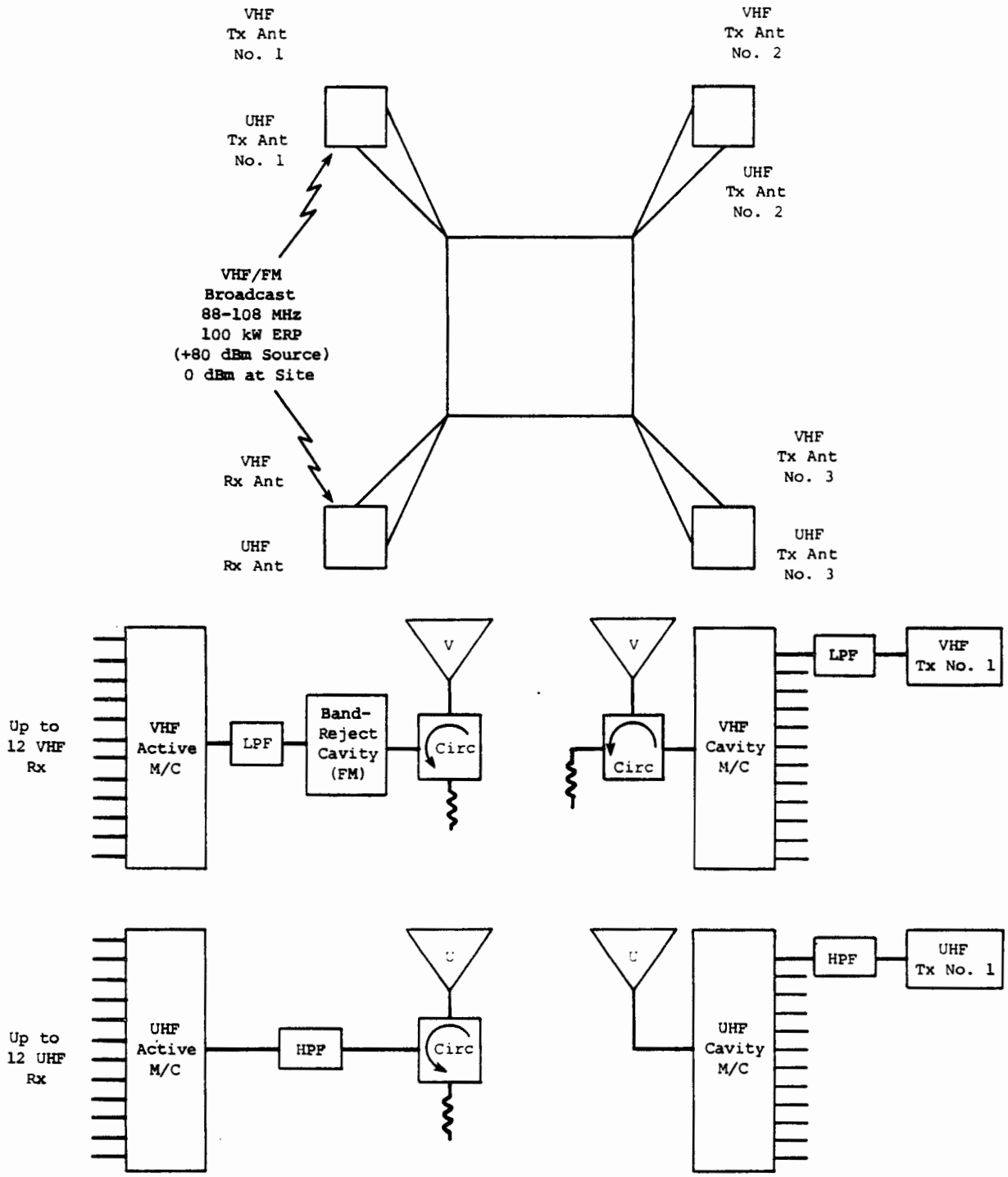

FIGURE 3-11

CONFIGURATION WITH TWENTY-FOUR FREQUENCIES, VOR AND FM TRANSMITTERS

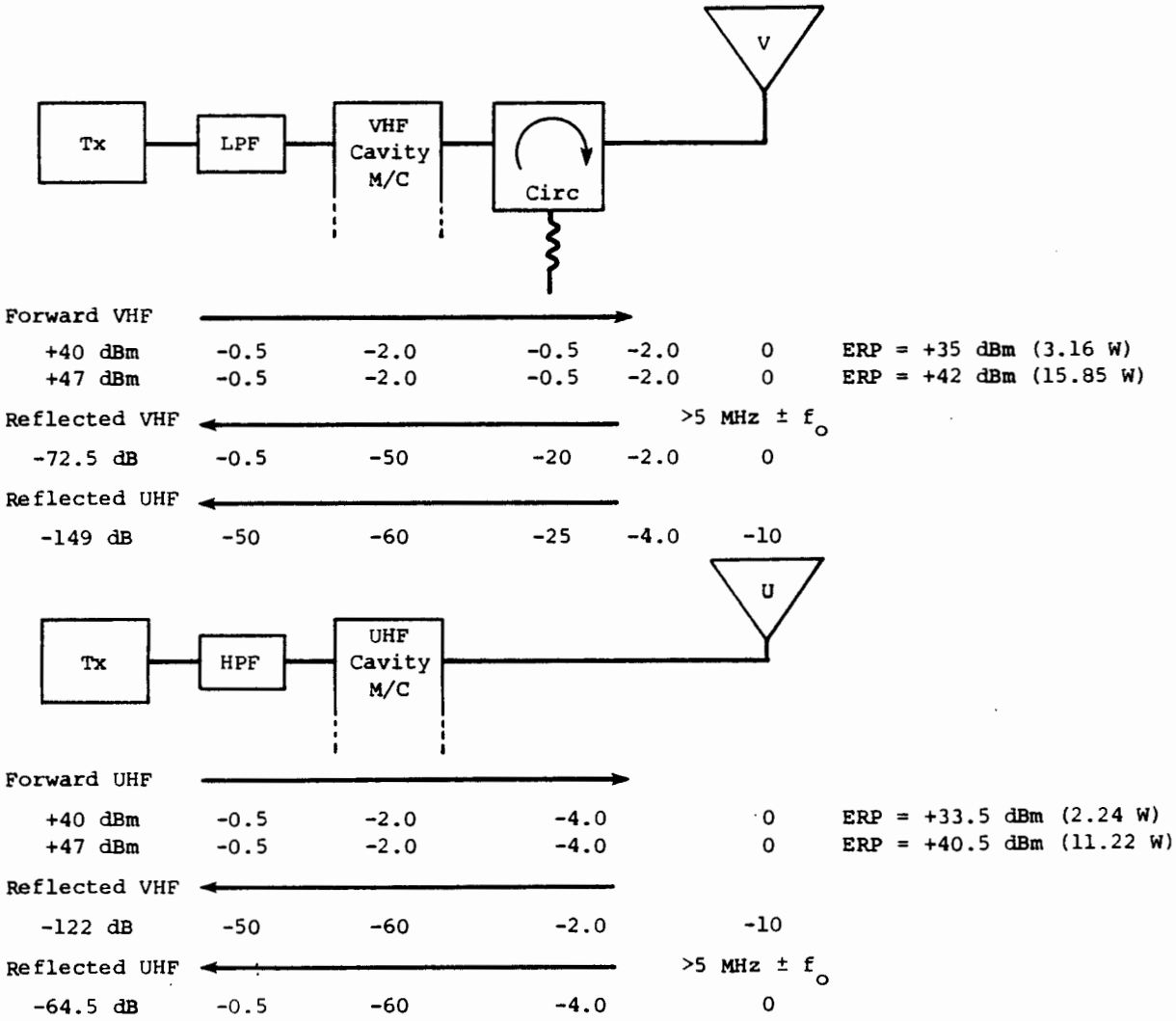

FIGURE 3-12

TRANSMITTER SIGNAL LOSSES FOR TWENTY-FOUR FREQUENCIES WITH VOR AND FM TRANSMITTERS

VHF

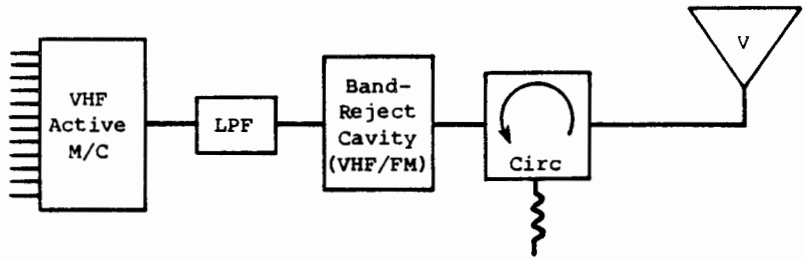

Net Sensitivity							
-100 dBm (2.2 μV)	0	-0.5	-0.5	-0.5	-2.0	0	
VHF/FM Reflected							
	0	-0.5	-70	-20	-2.0	0	(-92.5 dB)
UHF Reflected							
	0	-50	-0.5	-25	-4.0	-10	(-89.5 dB)

UHF

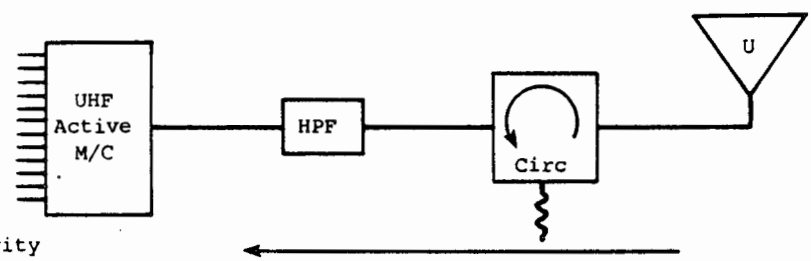

Net Sensitivity							
-98 dBm (2.8 μV)	0	-0.5	-0.5	-4.0	0		
VHF Reflected							
	0	-50	-20	-2.0	-10	(-82.0 dB)	
UHF Reflected							
	0	-0.5	-25	-4.0	0	(-29.5 dB)	

FIGURE 3-13

RECEIVER SIGNAL LOSSES FOR TWENTY-FOUR FREQUENCIES WITH VOR AND FM TRANSMITTERS

In the UHF receiving system (see Figure 3-13), the high-pass filter will suffice to attenuate the VHF/FM signal, and the ferrite circulator will attenuate reflections or intermodulation products by an additional 20 dB.

In many locations, the communications equipment is collocated with a broadcast facility. From a purely technical point-of-view, this is an undesirable configuration. However, the unavailability of other choices of real estate (e.g., mountain-top environments) often precludes the optimum situation for collocating FAA communications equipment. Many compromises may be faced in this more severe environment in that some interference problems may not be solved with present technology and current engineering practice. However, with the limited options available, the choice of a communications facility with intermittently impaired operation appears superior to no facility at all. Only the minimum number of "must-carry" channels should be implemented at an FM site because of the most difficult interference problems which may be generated.

3.5.2 Impact on the Air Traffic Control Facility

Sufficient isolation can be achieved for the satisfactory operation of the air traffic control facility. Transmitters and receivers specified, designed, and manufactured for collocated applications should be used, together with such tools as those described in this report. Most of the isolation devices described are passive, requiring little or no maintenance; however, their losses generally may require the use of 50-watt amplifiers on all of the ATC transmitters. Gain-type antennas, may be needed in locations requiring increased ERP.

3.6 SOLUTION OF SPECIAL OR UNIQUE PROBLEMS

Occasionally, a unique set of circumstances develop at a collocated air traffic control facility, that demand use of the greatest skill and experience available. These conditions may be caused by outside agencies who install high-powered transmitters in other frequency bands, sudden and unintentional cross-modulation of signals, or abnormal signal levels appearing on the utility lines serving the station. Another problem that demands unique, even specialized, treatment is the case that includes no low-impedance "earth ground" for the affected facility.

All of these conditions, and many others, will demand the attention of the most experienced engineers and technicians from across the regions. When such problems are in the embryonic stage, or an interference problem has become unmanageable, a special task force made up of the most experienced individuals should be formed to concentrate on the solution to the problem. If necessary, this special task force could include individuals from any FAA region. Then the techniques, devices, and methods used for accomplishing the solution then could be transmitted to all regions for future reference.

CHAPTER FOUR

CONCLUSIONS AND RECOMMENDATIONS

The computer model described in Chapter Two was exercised as a quick-look analysis tool to indicate the magnitude of a defined set of intermodulation problems. These were used to compare the relative difficulty of implementing various numbers of frequencies at a collocated site. A further analysis of collocation was performed by the examination of certain scenarios to illustrate possible solutions to interference problems that may be experienced in any collocation effort. Based on data gathered, the following conclusions and recommendations are made:

(1) Frequencies assigned to collocated facilities should be selected carefully, to avoid obvious intermodulation products. Present FAA frequency management programs appear adequate for this purpose.

(2) No equipment should be considered for collocation unless that equipment has been manufactured according to stringent specifications demanding exceptional performance in a crowded signal environment. An exception would be equipment that has been tested exhaustively and has been found suitable for collocation.

(3) All future procurement of VHF and UHF transmitters and receivers for air traffic control should be made according to specifications containing the performance requirements for collocated facilities. Specifications for older equipment still in use should be consulted (see Appendix A).

(4) Savings in money and time could result if existing government-owned structures not currently in use were used for collocated communications facilities. The abandoned sites usually provide a favorable location, as well as adequate utilities and roads.

(5) Modification, remodeling, or enlargement of existing structures usually is more cost effective than new construction. Actual calculation of such cost savings was beyond the scope of this contract, and therefore is not included in this report.

(6) Collocation with VOR facilities is feasible but represents a significant technical challenge. The transmitters, receivers, and antenna systems of the ATC system usually can be installed and engineered to provide satisfactory service in the presence of the VOR, but the communications antennas and their support structures may degrade the VOR course structure to make commissioning of the VOR without restrictions quite difficult. The impact on the VOR will increase with the number of communication channels and the number of installed antennas.

(7) If collocation with a VOR must be accomplished, it is recommended that the number of VHF and UHF antennas be held to a minimum. In addition, their height and location must be such that interference to airway radials and impact on low-altitude communications reception is minimized. Antennas may be located below the horizon of the VOR antenna. Horizontally polarized components also should be avoided, to minimize the possible impact of reradiated signals on the VOR course structure.

(8) Collocation with VHF/FM broadcast stations also is difficult: however this is usually manageable. Such collocation does not dictate the severe antenna installation restrictions applied to the VOR collocation, but it requires similar signal isolation techniques. Each site will present a unique set of problems and will require individual engineering solutions. Collocation of Air Traffic Control communications with Long Range Radar, Air Traffic Control Radar, RAPCON, and other facilities was beyond the scope of this contract, and is not addressed in this report.

(9) Site layouts and antenna configurations should minimize the number of antennas installed on collocated sites, and assure the maximum isolation by both vertical and horizontal separation of the antennas. New antennas, antenna support structures, and isolation devices for successful collocation of facilities should be added to the installation equipment inventory for future application at other sites (new or existing) where improved performance or isolation may be required.

(10) Isolation not provided by physical separation of antennas must be achieved electrically. The costs of electrical isolation include both the monetary cost of the devices to be installed and the losses associated with their introduction into the system. In most cases, the losses will require the use of either an antenna system providing several dB of gain or the optional 50-watt linear amplifier, or both.

(11) Electrical isolation of installed VHF and UHF systems will require the best engineering practices to use appropriately the many currently available isolation devices, including filters, isolators, cavities, circulators, and multicouplers. These are the tools that make successful site consolidation and equipment

collocation possible. New techniques and new isolation devices should be introduced as they are required or as they may become available.

(12) Development of unique installation design criteria reflecting critical interference control requirements was beyond the scope of this contract and has not been addressed in this report. Most requirements, however, can be satisfied by dedicated site engineering and the employment of unique devices. These devices may include special filters, selective shielding, and custom antennas, and support structures. Careful placement of critical systems components is mandatory.

(13) It is recommended that the FAA create a special task force to study and solve extraordinary collocation problems that cannot be managed or solved by normal site engineering practices. Successful collocation and isolation techniques developed by this special task force should be made available to all FAA regions for possible application at other problem locations.

APPENDIX A

EQUIPMENT SPECIFICATIONS

Early in 1966, the FAA and the Department of Defense jointly initiated a project to develop a performance specification for a new class of VHF and UHF transmitters and receivers for the air traffic control environment. This new equipment was expected to exhibit a 10,000 hour MTBF (more than one year between failures), while being compatible with the high signal densities of collocated air traffic control facilities. The equipment was developed, tested, and produced. It is currently in use by both the armed forces and the FAA.

ARINC Research has not attempted to catalog the various changes or modifications that may have been processed during the intervening years, but the performance requirements of collocated equipments have remained essentially the same as the original 1966 requirements. A copy of the original 1966 Technical Exhibits OCNEE* 66-67 and OCNEE 66-68 is included in this report to serve as an engineering reference. The Technical Exhibits reflect the characteristics expected of any communications equipment to be considered for high density installation in the ATC system.

*OCNEE was the office symbol of the Service Engineering Division, Oklahoma City Air Materiel Area, Tinker Air Force Base, Oklahoma, coordinator of the multiservice development project.

TECHNICAL EXHIBIT OCNEE 66-67
23 November 1966

VHF/UHF AM RECEIVER AN/GRR-( )

1. SCOPE

1.1 This equipment specification describes a reliable single channel transistorized communications receiver to be installed in collocated VHF/UHF transmitter/receiver ground stations engaged in the air traffic control service throughout the world. The receiver shall be capable of detecting and reproducing the audio (voice) modulation contained on the amplitude modulated carriers of aircraft transmitters operating in the 116 to 150 MHz and 225 to 399.95 MHz communications service. The receiver shall be capable of operating on each of the authorized VHF and UHF air traffic control communications channels in the appropriate bands and shall be compatible with the 50 KHz channel spacing of those bands. The receiver also must be compatible with the demands of VHF/UHF transmitter/receiver collocation. The modular construction of the receiver shall facilitate a possible future modification to provide simple conversion to 25 KHz channel spacing in the air traffic control service. The receiver shall be expected to operate reliably for long periods of time under normal operations. The receiver shall contain a minimum parts count consistent with good design and shall contain all of the design characteristics required to achieve an MTBF of at least 10,000 hours.

2. APPLICABLE DOCUMENTS

2.1 The following documents, of the issue in effect on the date of the invitation for bids or request for proposals, form a part of this equipment specification. In the event of conflict between the requirements of this equipment specification and the requirements of the referenced documents, the requirements of this equipment specification shall govern.

<u>Military Specifications</u>

MIL-P-116	Preservation
MIL-C-3098	Quartz Crystals
MIL-E-4158	Ground Electronic Equipment, General Requirements
MIL-E-4682	Electron Tubes and Transistors
MIL-C-6781	Control Panel, Aircraft Equipment
MIL-N-7513	Nomenclature Assignment and Nameplate Approval
MIL-Q-9858	Quality Program Requirements
MIL-S-19500	Semiconductor Devices
NAVSHIPS 94324	Maintainability Design Handbook

NAVSHIPS 94501	Reliability Design Handbook

Military Standards

MIL-STD-129	Marking for Shipment
MIL-STD-130	Identification Marking of U.S. Military Property
MIL-STD-188	Military Communication System Technical Standards
MIL-STD-189	Racks, Electrical Equipment, 19 inch and Associated Panels
MIL-STD-415	Test Points
MIL-STD-454	Standard General Requirements for Electronic Equipment
MIL-STD-470	Maintainability Program Requirements
MIL-STD-471	Maintainability Demonstration
MIL-STD-683	Crystals and Holders
MIL-STD-781	Test Levels and Accept/Reject Criteria
MIL-STD-785	Requirements for Reliability Program
MIL-STD-803	Human Engineering
MIL-STD-810	Environmental Test Methods
MIL-STD-826	Electromagnetic Interference Test Requirements
MIL-STD-831	Preparation of Test Reports

Federal Standards

FED-STD-595	Paints

Military Handbooks

MIL-HDBK-216	Radio Transmission Lines and Fittings
MIL-HDBK-217	Reliability Stress and Failure Rate Data for Electronic Equipment
MIL-HDBK-H-108	Sampling Procedures and Tables for Life and Reliability Testing

Technical Orders

31P5-2-137	Standard Installation Instructions, RAPCON Communication Facility

31R2-1-137	Standard Installation Instructions, Control Tower Facility
31S1-2FSA22-10	GEEIA Installation Standard, Control Monitor Group AN/FSA-22

AF Manuals

AFSCM 80-3	Handbook of Design Instructions
AFLC/AFSCM 310-1	Management of Contractor Data and Reports

Miscellaneous

OTS PB-151894	RADC Reliability Notebook (RADC-TR-58-111)
	ICAO International Standards and Recommended Practices (Annex 10)
	ITU Radio Regulations (Geneva 1959)

3. REQUIREMENTS

3.1 Performance. The single channel receiver described in this specification shall be designed for worldwide deployment in the air traffic control service and shall operate on any of the 3,500 channels allocated to this service between 225 and 399.95 MHz and through an interchange of converter modules, the receiver shall operate on any of the 680 channels between 116 and 150 MHz and shall be compatible in all respects with the 50 KHz channel spacing of the air traffic control service. The receiver shall be entirely transistorized and shall contain no vacuum tubes. It shall contain modular construction and shall be designed to permit conversion to 7,000 channels within the same UHF band or 1360 channels within the VHF band with the adjacent channels spaced at intervals of 25 KHz. The receiver shall represent the state-of-the-art in receiver reliability and shall contain parts and workmanship of the highest quality. The receiver shall perform reliably in an air traffic control environment which may include collocated VHF/UHF transmitter/receiver sites, air traffic control towers, radar approach control facilities (RAPCON's) and precision approach radar facilities such as GCA's and mobile RAPCON's. Typically the receiver also will be installed in racks or cabinets in large multiple installations.

3.1.1 Type of Construction. The UHF module(s) with an operating frequency of 225 to 399.95 MHz and the VHF module(s) with an operating frequency of 116 to 150 MHz shall be interchangeable in the receiver. All cables, connectors, and voltages shall be compatible among the module(s) to allow maximum flexibility of employment and interchange. The receiver shall incorporate modular construction to the maximum extent to facilitate the correction of failures through rapid replacement of modular assemblies and to reduce the time required for restoration of normal service in case of failure. The receiver shall contain no blowers and shall not require forced air cooling for normal operation. Printed circuit boards shall not contain mechanical linkages. Printed circuit boards and modules shall be so constructed that removal and installation require a minimum of tools and soldering.

3.1.2 Protective Circuitry. The receiver shall contain suitable semiconductor protective circuitry to isolate all active audio and radio frequency transistors and semiconductor devices from destructive transient voltages or spikes introduced into the receiver from the AC power line and the DC bus. The protective circuits shall react to short duration transients occurring either at a random or recurring rate and shall become effective within 100 nanoseconds of the leading edge of the transient pulse. The protective semiconductor devices shall be effective against transients up to 4 times the amplitude of the ambient voltage in the circuits to be protected and shall not disable the receiver during their protective operation. The contractor shall demonstrate that adequate transient voltage protection has been provided for all semiconductors including those associated with the RF input circuits, the audio output circuits, and the power supply circuits.

3.1.3 Physical Size of Equipment. The receiver shall be suitable for mounting in a standard 19" rack or cabinet and shall have a maximum depth of 12" behind the front panel. The maximum permissible panel height shall be 3.5" ("B" Panel, MIL-STD-189); the minimum panel size shall be 1.75" ("A" Panel, MIL-STD-189).

3.1.3.1 Weight of Receiver. Total weight of the receiver shall not exceed 15 lbs. including all radio frequency, audio and power supply components with shielding and dust covers installed.

3.1.4 Interchangeability of Modules. Modules contained in the receiver shall be interchangeable with modules performing the same functions in other receivers of the same production type. Interchangeability of modules shall be accomplished and demonstrated without necessity for realignment of the electrical circuits contained in the interchanged modules and without realignment of the circuits contained in adjacent modules of the receiver. All assemblies, subassemblies, printed circuit boards, and modules shall be accessible for testing or replacement and shall facilitate rapid fault location and restoration of service by direct replacement.

3.2 Prototype Equipment. Eight (8) preproduction equipments shall be required for testing. Two (2) receivers shall be utilized for inplant environmental and proof of performance testing. Three (3) operational receivers shall be subjected to continuous operation at the contractor's plant for a period of approximately sixty (60) days to determine whether the equipment has met the design goals in terms of reliability, maintainability, and compatibility with a simulated air traffic control environment test program. Three (3) receivers shall be furnished to the Air Force for simultaneous operational suitability tests. The 3 equipments furnished for operational suitability testing shall be shipped to an Air Force site to be designated by the Contracting Officer. Air Force testing will be performed at that site for approximately sixty (60) days. The contractor shall be responsible for support of all preproduction equipments during the entire test program including installation assistance, familiarization of Air Force personnel with the equipment, supply of parts and interim instruction manuals and correction or repair of failures.

3.3 Flexibility of Primary Power. All transformers shall be provided with primary taps to furnish the required rectifier voltages for AC line voltages of 105, 120, 210, and 240 volts ± 10%. (Note that this specification requires normal operation of the equipment with all AC input voltages within ± 10% of the voltage for which the primary tap is connected.) Tap changing of all appropriate transformers shall be accomplished simultaneiously by setting a metal link or strap. Unless otherwise specified in the contract, taps shall be connected for 120 volt operation upon delivery. In addition to operation on the AC voltages listed above, the receiver shall have provisions whereby a 24 volt DC battery bus may be floated across the power supply to provide emergency power in event of failure of AC power. The AC power supply shall also recharge the 24 volt DC battery and maintain it in a fully charged condition without overcharging or causing damage to any component in the receiver. The receiver shall be so designed that application of a short circuit or voltage of a reverse polarity across the 24 volt terminals shall not result in failure of components (other than fuses) within the receiver. Elimination of fuses shall be considered as a design goal by the contractor through prudent employment of isolation diodes and other reliable protective devices; any fuses incorporated in the design shall be of the self-indicating type and shall be mounted on the front panel of the receiver. The receiver shall be capable of rated performance while being operated on DC power from the 24 volt bus.

3.4 Normal Operating Conditions.

Ambient Temperature	-29° to +60°C
Relative Humidity	5% to 95% ± 5%
AC Line Voltage	120 V ± 10%; 240 V ± 10%
AC Line Frequency	47 to 420 Hz
DC	22 to 30 Volts
Duty Cycle	Continuous Unattended

3.4.1 Non-Operating and Storage Conditions.

Ambient Temperature	-62°C to +71°C
Relative Humidity	5% to 95%
Barometric Pressure	3.34 Inches Hg to 31 Inches Hg

3.4.2 Operation After Transportation. The receiver shall be required to operate immediately after being transported from one location to another, either while installed in a GCA or Mobile RAPCON facility, or while being transported in the custody of the military supply system. The receiver shall not be required to operate while installed or carried in a vehicle in motion.

3.5 General Requirements. The equipment shall meet the requirements of MIL-STD-454 and MIL-E-4158 regarding design, parts, materials, processes, identification and marking, and workmanship except as otherwise noted in this speci-

fication. The total weight and volume of this equipment shall be reduced as far as possible without sacrificing reliability or maintainability. The contractor shall employ all methods possible in the process of design, development and manufacturing which will insure quality and maximum reliability and maintainability. The design shall include all possible features which produce reliable and stable operation with minimum requirements for adjustments and maintenance. Conservative design practices with ample operating margins shall be employed throughout. The contractor shall be familiar with NAVSHIPS 94324, NAVSHIPS 94501, AFSCM 80-3, and the RADC Reliability Notebook, and shall make maximum use of the design guidance therein. (See 4.3 through 4.3.3.6).

3.6 Reliability. The design reliability of the receiver and its components shall achieve a Specified Mean Time Between Failures of not less than 10,000 hours under conditions of MIL-STD-781, level A-1.

3.6.1 Reliability Program Plan. The contractor shall submit to the procuring activity for review and acceptance an effective and economical proposed program plan responsive to MIL-STD-785. The plan shall be included in the contractor's proposal submitted in accordance with the Government's Request for Proposals (RFP). (See 4.3.2.1)

3.6.2 Reliability Prediction. Reliability prediction shall be performed in accordance with procedures of MIL-STD-785 (5.1.9.1). The contractor shall submit as part of the technical proposal, a reliability prediction in accordance with MIL STD-156 using failure rate data furnished in MIL Hand Book 217.

3.6.3 Derating of Components. Quality components selected for their long life and reliability shall be used throughout the receiver and shall be derated in each specific application to achieve the lowest practicable failure rate as reflected for each component class in MIL Handbook 217.

3.7 Reliability Analysis. The contractor shall analyze existing designs and techniques to determine the methods necessary to satisfy the reliability requirements of this specification.

3.7.1 Preliminary Reliability Estimate. Within 45 days of contract award, in accordance with 5.1.9.1 of MIL-STD-785, the contractor shall prepare and submit a Preliminary Reliability Prediction of the receiver. The failure rates shall be obtained from MIL-Handbook 217 for the classes of components and the voltage and thermal stresses involved.

3.7.2 Final Reliability Estimate. As the design of each major assembly or subassembly is established, the contractor shall compute and submit within 30 days the Final Reliability Estimate of that assembly and update the estimated reliability index for the receiver.

3.7.3 Test Conditions. Because of the MTBF requirement of this receiver, the limited number of test articles and the limited time for testing, test level A-1 of MIL-STD-781 shall apply.

3.8 Contractor's Quality Assurance System. The contractor shall provide and maintain an effective inspection and quality assurance system acceptable to the Government and in accordance with MIL-Q-9858. A current written description of the system shall be submitted to the cognizant Government inspector for system approval prior to preproduction inspection. Any changes to the approved quality assurance system which might affect the degree of assurance required by this specification or other applicable documents must be submitted to the cognizant inspector and approved in writing prior to use.

3.8.1 Government Verification of Contractor's Quality Assurance System. All quality assurance operations performed by the contractor shall be subject to Government verification at any time. Verification shall consist of, but not be limited to:

a. Surveillance of the operations to determine that practices, methods, and procedures of the written system description are being properly applied, and;

b. Government product inspection to measure quality of product to be offered for acceptance. Failure of the contractor to correct deficiencies discovered by him or of which he is notified shall be cause for suspension of acceptance until corrective action has been made or until conformance of product of prescribed criteria has been demonstrated.

3.9 Maintainability. All assemblies, subassemblies and components of the receiver shall be readily accessible for maintenance, to accelerate and facilitate the location of faults and the replacement of faulty modules or subassemblies. The maximum time for location of the fault, replacement of the faulty module or subassemblies and restoration of service shall not exceed 15 minutes. Time shall not exceed 180 minutes for repair of the module itself, including checkout and alignment.

3.9.1 Maintainability Program Plan. The contractor shall submit to the procuring activity for review and acceptance, an effective and economically proposed program plan responsive to MIL STD 470. The plan shall be included in the contractor's proposal submitted in accordance with the Government's request for proposal.

3.10 Test Points. The contractor shall prepare a List of Proposed Test Points in accordance with 4.4.2.4 of MIL-STD-415 to be delivered at the same time as the Preliminary Reliability Estimate (3.7.1).

3.10.1 Major Test Points. Major test points necessary to confirm proper operation of the receiver and necessary in the location of faults in major modules shall be available on the front panel and shall be sufficient to identify major modules, assemblies, or subassemblies which may have failed or deteriorated in service.

3.10.2 Minor Test Points. Minor test points required during bench testing or alignment procedures shall be readily available upon removal of dust covers and shall be sufficient to identify faults or deteriorated performance within each printed circuit card or minor subassembly of the receiver. Test points shall be readily identified and cross-referenced in the handbook of maintenance instructions which also shall contain reference to necessary waveforms, voltage, current, or resistance readings that may be appropriate for the individual test points.

3.11 Crystal Oscillator. The receiver shall incorporate a crystal oscillator possessing inherent stability characteristics sufficient to achieve a frequency accuracy of ± .001% at the operating frequency of the receiver. The crystal shall be installed in or through the front panel of the receiver; installation or removal of a crystal for a different channel frequency shall not require removal of the receiver from the rack either for access to the crystal or retuning of internal receiver circuitry.

3.11.1 Crystal Unit. The crystal oscillator shall function with a standard crystal of the desired frequency accuracy and stability in accordance with MIL-C-3098. With the crystal properly installed in the front panel of the receiver, the crystal shall not extend beyond other fixed components (such as dials, knobs, switches and connectors) also extending from the front panel.

3.11.2 Crystal Oven. The basic design of the receiver shall not contain a crystal oven unless the contractor demonstrates that the required degree of frequency accuracy and stability cannot be achieved in any other manner. Operation of the crystal oven shall not be noticeable or apparent in any internal circuit of the receiver and shall not be audible in the audio output of the receiver. In the event that a crystal oven should be approved by the Contracting Officer, an amber indicator light shall be mounted on the front panel to indicate operation of the oven heater. The crystal oven (if approved) shall be provided in accordance with the following requirements:

• Crystal Oven Socket	For HC-6/U Holder
Operating Temperature	Controlled 67°C ± 5°C
Heater Power	24 V DC, 0.25 amperes or less
Crystal Oven Base	Standard Octal

3.11.3 Maximum Allowable Frequency Deviation. Under all combinations of normal operating conditions specified in 3.4 including those combinations where the net effects are additive, the total deviation under humidity, temperature, and power fluctuations shall not exceed ± .001% of the designated operating frequency.

3.11.4 External Oscillator Input. The receiver shall have a provision for use of an external precision oscillator (not to be furnished with this equipment) for frequency control of the receiver in lieu of a crystal. The external radio frequency input required for normal operation shall not exceed .15 volts RMS into a 50 ohm ± 2 ohm impedance. A type BNC connector shall be provided for the external oscillator input.

3.11.5 Local Oscillator Coupled Output. All frequencies generated by the local oscillator including all primary frequencies, harmonics, mixer products and identifiable products thereof and all other spurious outputs shall not exceed a level of 20 microvolts measured at the antenna terminal of the receiver when terminated into a 50 ohm load.

3.12 Receiver Performance. The receiver shall be designed to produce an audio output of 100 milliwatts into a 600 ohm load with a 10 db (minimum) signal-plus-noise to noise ratio measured at the main receiver output when a standard VHF or UHF radio frequency test voltage of 1.5 microvolts (30% modulated ± 5%) is

applied to the antenna input circuit across a 50 ohm load resistor with the receiver squelch circuit in operation. (See 4.5, 4.5.1 and Fig 4)

3.12.1 Sensitivity of Two Receivers Operated from One Antenna. With the inputs of two receivers connected in parallel on a single antenna, and the receivers tuned to channels separted by 3 MHz or UHF and 1 MHz on VHF, a signal of 2.0 microvolts modulated 30% (±5%) on each appropriate channel shall produce a signal-plus-noise to noise ratio of not less than 10 db while delivering 100 milliwatts of audio power at each receiver output. (See 4.5.2)

3.12.2 Instructions for Operation of Two Receivers from One Antenna. Technical Orders furnished with the receivers shall contain specific instructions for the preparation of RF transmission lines when two receivers are to be operated from a single antenna. Instructions shall be simple and straightforward, requiring a minimum of human judgment, computation, or interpretation, and shall include all frequency combinations within the frequency range of the receivers.

3.12.3 Selectivity. The bandwidth of the intermediate frequency amplifier for 50 KHz channel spacing shall conform to the following profile with respect to the center frequency. (See 4.6 and Fig 4)

Attenuation	Bandwidth
6 db	± 18 KHz minimum
20 db	± 27 KHz maximum
40 db	± 31 KHz maximum
60 db	± 35 KHz maximum
80 db	± 40 KHz maximum

3.12.4 Pass Band Characteristics. Any decrease in the pass band envelope (± 15 KHz) shall not exceed 2 db below the peaks of the envelope.

3.12.5 Selectivity for 25 KHz Channel Spacing. The bandwidth of the intermediate frequency amplifier for 25 KHz channel spacing shall conform to the following profile with respect to the center frequency. (See 4.6 and Fig 4)

Attenuation	Bandwidth
6 db	± 9 KHz Minimum
20 db	±14 KHz Maximum
40 db	±15 KHz Maximum
60 db	±16 KHz Maximum
80 db	±20 KHz Maximum

3.12.6 Pass Band Characteristics (for 25 KHz Channel Spacing). Any decreases in the pass band envelope (± 6 KHz) shall not exceed 2 db below the peaks of the envelope.

3.13 Antenna Input Circuit. The RF input circuit shall be designed for connection to a 50 ohm unbalanced flexible coaxial cable through a constant impedance N-type connector at the rear of the equipment.

3.13.1 Front Panel Access to Antenna and Receiver Input. The antenna circuit design shall include a front panel BNC connector to facilitate maintenance of the receiver in its installed location. The antenna input itself shall be located at the rear of the panel or in the rear of the receiver; however a rigid double male type U-shaped (180°) connector (BNC) shall be used for normal front panel patching of the antenna to the receiver. The connector shall be easily removed for front panel access to both the antenna and the receiver input, thereby facilitating measurements of antenna characteristics and receiver characteristics from the front panel of the receiver.

3.13.2 Protective Devices on Input Circuits. The receiver shall contain suitable protective devices to isolate the input stages of the receiver from destructive transients originated by precipitation and lightning static or other external transient sources. The receiver shall withstand without permanent damage or permanent impairment of sensitivity or gain, at 225 and at 400 MHz for the UHF receiver and at 116 and 150 MHz for the VHF receiver, a channel input voltage of 20.0 volts unmodulated applied to the RF input circuit continuously for a period of five minutes.

3.14 Audio Output Circuits. Two (2) unbalanced ungrounded transformer output circuits shall be provided. The main output shall deliver not less than 100 milliwatts into a nominal 600 ohm external resistive load while the second output shall simultaneously deliver a signal level of 100 milliwatts into a separate nominal 600 ohm external resistive load. The main audio output level control shall be a recessed screwdriver adjustment located on the front panel and shall have a logarithmic taper. The second audio output shall be terminated in a headset jack on the front panel, controlled by a logarithmic taper audio control located on the front panel, and equipped with a compatible control knob.

3.14.1 Audio Output Transformer Secondary Windings. The output transformer secondary windings shall be isolated from ground. The main output winding shall consist of two 150 ohm windings normally connected in series to provide the 600 ohm output impedance. The second output winding shall be identical to the main output windings but shall be connected to the audio jack on the front panel of the receiver for ready access during maintenance or local operation of the receiver.

3.14.2 Output Level Regulation. With an initial audio output of 100 milliwatts into a 600 ohm resistive load from the main output circuit, the main output voltage shall not drop more than 4 db with a 5 to 1 reduction (120 ohms) in the load resistor. (See 4.7)

3.14.3 Audio Level Control to Prevent Cross Talk in Remote Cables. With an input signal of 10 microvolts (30% modulated ± 5%) and the receiver adjusted for an audio output of 100 milliwatts, the audio output signal shall not increase more than 3 db as the modulation is increased to 90% ± 5%.

3.14.4 Protective Devices on Audio Circuits. Both audio circuits shall withstand without permanent damage, input pulses applied to each output terminal pair and from terminals to chassis of ±1,000 volts peak, with rise time not over 10 microseconds, duration of not over 50 microseconds, and decay time of not less than 600 microseconds measured between 10% and 90% of peak amplitude. After 100 pulses of each polarity applied between output terminals and afterwards between terminals and chassis at intervals of not over 1 second, any resulting change in gain of the output stage shall not exceed 0.2 db.

3.15 Automatic Gain Control. With an input signal of 6 microvolts (modulated 30% ± 5%) and the audio output control adjusted for an output of 100 milliwatts, the output shall not vary more than 3 db as the signal input is advanced from 6 microvolts to 1 volt. (See 4.14 and Fig 3)

3.15.1 AGC Time Constant. The AGC shall attack within 100 milliseconds and decay within 100 milliseconds. Measurements of the attack time and decay time shall be made from the leading edge and the trailing edge of a 500 millivolt 500 millisecond pulse, and shall be measured from the leading edge of the applied pulse to the point where the AGC voltage has attained a value equivalent to 90% of the AGC maximum voltage and the decay time shall be measured from the trailing edge of the applied pulse to the point where the AGC voltage has fallen to an equivalent of 10% of its zero signal level. (See 4.15)

3.16 Squelch. A carrier-operated noise silencer shall be provided to mute the receiver output pending application of carrier inputs not greater than 1.5 microvolts with squelch sensitivity at maximum setting and not less than 50 microvolts with squelch sensitivity at minimum setting.

3.16.1 Squelch Switch. A two-position toggle switch shall be provided to control the squelch operation. The functions performed by the switch shall be "squelch on" and "squelch off".

3.17 Noise Control. A noise control system shall be incorporated into the receiver to reduce impulse type noise.

3.17.1 Pulse Type Interference. The receiver shall meet the requirements of 3.18 and 3.19 when RF pulses having the following characteristics are introduced into the receiver input:

Width of Pulse	10 ± 2 microseconds	2 ± microsecond
Pulse Repetition Rate	360 ± 60 PRF	900 ± 600 PRF
Pulse Shape	Rise and decay time less than 1 microsecond	Rise and decay time less than 1/10 microsecond

3.18 AGC Versus Pulse Interference. With an input signal ranging from 3 to 1,000 microvolts modulated 30% (± 5%) at 400 Hz introduced simultaneously with pulses of the same carrier frequency, the resulting 400 Hz audio output shall not decrease more than 1 db as a result of pulses 10 times the test voltage nor decrease more than 2 db as a result of pulses 100 times the test voltage. The pulse repetition frequency of the interfering pulses shall not appear in the audio circuit of the receiver at an objectionable audio level and shall not be of sufficient amplitude to cause interference with the reception of the desired 400 Hz audio signal. Under worst conditions, audio produced by the interfering PRF shall be a minimum of 20 db below the desired signal.

3.19 Squelch Versus Pulse Interference. The squelch shall not open when pulses and unmodulated carriers on the same radio frequency are introduced simultaneously at the following levels (microvolts): (See 4.17 and Fig 7)

Squelch Threshold	Carrier Level	Pulse Peak Amplitude
3.0	0	3,000
3.0	2.0	1,000
50.0	37.5	5,000

3.20 Hum and Noise. With test voltages of 300 microvolts to 100 millivolts (modulated 30% ± 5% at 1,000 Hz) applied to the receiver input, the hum and all other unwanted signals including hum modulation of the modulated test tone delivered to the main output load shall be not less than 50 db below the test tone output level of 100 milliwatts. Hum and noise tests shall be performed at frequencies of 850, 900, 1050, 1100 and 1150 Hz utilizing 50 Hz AC power, at 820, 880, 1060, 1120, and 1180 Hz when using 60 Hz power, and at 200, 600, 1400, 1800, and 2200 Hz when using 400 Hz power. (See 4.11 and Fig 3)

3.21 Desensitization. With a standard test signal of 3 microvolts modulated 30% ± 5% applied to the receiver and audio output control adjusted for an audio output of 100 milliwatts into the main output load, the following high-level off-channel unmodulated signals shall not reduce the receiver output more than 2 db. (See 4.9 and Fig 6)

Undesired Signal Level Volts	Frequency ± MHz Off Center Frequency (VHF)	(UHF)
0.1	0.3	0.9
0.3	0.5	1.5
1.0	0.9	2.6
3.0	1.6	4.5

3.22 Receiver Intermodulation. With the receiver audio level control adjusted to produce an output level of 100 milliwatts with a 3 microvolt 30% ± 5% modulated input signal at the resonant frequency of the receiver (f_o), the simultaneous application of two off-resonant signals f_a and f_b (not less than 10,000 microvolts each) in place of the standard signal input shall be required to produce an audio output of 25 milliwatts. The two off-resonant signals shall be spaced 100 KHz from each other with f_a ± 100 KHz from f_o and so related that

12

f_c equals 2 f_a - f_b. The carrier amplitude of the two off-resonant signals shall be equal to each other. Signal f_a shall be unmodulated and signal f_b shall be modulated 30% ± 5% at 1,000 Hz. (See 4.8 and Fig 5)

3.23 Cross-Modulation. With the audio gain control adjusted to produce 100 millivolts at the main output terminal with a standard input test voltage of 3 microvolts (30% modulated ± 5%) and a signal plus noise to noise ratio of at least 10 db, the simultaneous application of a 90% (± 5% modulated off-resonant signal (undesired), and an unmodulated on-channel test signal shall result in an audio output not exceeding 3 db above the output (noise) produced by the unmodulated resonant test signal. The desired signal level shall be varied from 3.0 microvolts to 100 millivolts for each undesired signal level and frequency described in the desensitization tests, and shall remain within the same cross-modulation limits. (See 4.10 and Fig 6)

3.24 Audio Frequency Response. With a signal of at least 10 microvolts (modulated 30% ± 5%) and the audio output adjusted to a level of 100 milliwatts at the main receiver output with a 1,000 Hz modulation frequency, the output shall not vary more than =1 db or -2 db as the modulation frequency is varied from 300 to 6,000 Hz.

3.24.1 Audio Response Above 6,000 Hz. Above 6,000 Hz, the audio output shall decrease as the frequency increases, and shall be down at least 10 db at 10,000 Hz.

3.24.2 Audio Response Below 300 Hz. Below 300 Hz, the audio output shall decrease as the frequency decreases and shall be down at least 10 db at 100 Hz.

3.25 Audio Distortion. With a 1 volt input signal modulated 30% ± 5% and with the audio level of the receiver adjusted to an output of 100 milliwatts into a 600 ohm load, the total harmonic distortion shall not exceed 10% as measured successively at 300, 1,500, 3,000 and 6,000 Hertz. With the same RF input level modulated at 90% ± 5%, the total harmonic distortion over the same frequency range shall not exceed 20%.

3.26 Selection of Semiconductor Devices. All semiconductor devices shall be environmentally qualified production articles in accordance with MIL-S-19500. Field effect transistors shall be acceptable if environmentally qualified and adequately protected against transient voltages. Germanium semiconductor devices and vacuum tubes shall not be incorporated in the receiver design.

3.26.1 Substitution of Semiconductor Devices. Substitution of semiconductor devices (semiconductors not authorized by MIL-S-19500) shall not be authorized unless specifically requested by the contractor with fully explained justification and specifically approved in writing by the Contracting Officer after a thorough engineering evaluation.

3.26.2 Mounting of Semiconductors. All semiconductors with wire leads shall be soldered into the circuit. All other semiconductors shall be mounted in accordance with the recommendations of their manufacturers.

3.27 Paint. The receiver shall be finished in a semi-gloss gray color according to FED-STD-595, color 26152. Necessary markings on this surface shall be accomplished in a compatible semi-gloss white.

4.0 SAMPLING, INSPECTION, AND TEST PROCEDURES REQUIRED FOR QUALITY ASSURANCE

4.1 General. The contractor shall be responsible for the performance of all inspection and testing requirements as specified herein. All contractor prepared test procedures shall be approved by the contracting officer prior to commencement of testing. Except as otherwise specified, the contractor may utilize his own or any other inspection facilities and services acceptable to the Government. Inspection records of the examination and tests shall be kept complete and available to the Government as specified in the contract. The Government reserves the right to perform any or all of the inspections set forth where such inspections are deemed necessary by the Government to assure that supplies and services conform to the prescribed requirements.

4.2 Classification of Tests. Prescribed inspections and the tests of the equipment shall be classified as qualification tests and acceptance tests.

4.3 Qualification Tests. Qualification tests shall be performed by the contractor on the first 2 complete equipments produced under this specification. To minimize the elapsed time for performance of the tests and the development of test data, the Air Force may desire to perform operational suitability tests at the same time that the contractor is performing environmental tests. (See 3.2)

4.3.1 Environmental Tests. Environmental tests shall be performed in accordance with MIL-STD-810 unless otherwise specified herein.

4.3.1.1 Low Pressure. Components and assemblies shall be subjected to test method 500, procedure I.

4.3.1.2 High Temperature. Components and assemblies shall be subjected to test method 501, procedure I.

4.3.1.3 Low Temperature. Components and assemblies shall be subjected to test method 502, procedure I.

4.3.1.4 Humidity. Components and assemblies shall be subjected to test method 507, procedure I.

4.3.1.5 Vibration. Components and assemblies shall be subjected to test method 514, procedure I. The test shall be for equipment class 5, using test curve A of Figure 514-5.

4.3.1.6 Shock. Components and assemblies shall be subjected to test method 516, procedure I, II, and VI.

4.3.2 Reliability. The contractor shall establish a reliability assurance program that is planned, integrated and developed in conjunction with other planning functions. The program shall be based upon the specified requirements, the complexity of design, the quantity under procurement, and the manufacturing techniques required. The program shall assure adequate reliability consideration throughout the respective design, development and production as necessary to meet the contractual reliability requirements.

4.3.2.1 Reliability Program Plan. The contractor shall submit a detailed reliability program plan in accordance with MIL-STD-785 as a separate and complete entity within the total system project delineation. The program plan shall be submitted no later than 30 days after award of contract. Submission of the proposed detailed program plan concurrent with the contractor's technical proposal is prescribed in 3.6.1 of this specification.

4.3.2.2 Basis of Compliance. The reliability program plan, as approved by the procuring activity and incorporated into the contract, becomes the basis for contractual compliance.

4.3.2.3 Reliability Program. A minimum reliability program applicable to this specification shall consist of (but not be limited to) program elements contained in MIL-STD-785 as follows:

(a) Reliability Organization (MIL-STD-785, 5.1.1)

(b) Management and Control (MIL-STD-785, 5.1.2)

(c) Program Review (MIL-STD-785, 5.1.3)

(d) Critical Items (MIL-STD-785, 5.1.8)

(e) Apportionment and Mathematical Models (MIL-STD-785, 5.1.9)

(f) Reliability Prediction (MIL-STD-785, 5.1.9.1)

(g) Design Reviews (MIL-STD-785, 5.1.10)

(h) Supplier and Subcontractor Reliability Programs (MIL-STD-785, 5.1.11)

(i) Human Engineering (MIL-STD-785, 5.1.13)

(j) Safety Engineering (MIL-STD-785, 5.1.15)

(k) Maintainability (MIL-STD-785, 5.1.16)

(l) Failure Data Collection, Analysis and Corrective Action (MIL-STD-785, 5.1.19)

(m) Reliability Demonstration (MIL-STD-785, 5.1.20 and Section 4.3.2.4 below)

4.3.2.4 Reliability Demonstration. The contractor is required to submit a statistical test plan, to be used in the demonstration of the required reliability of the equipment, within thirty (30) days after the date of contract. The test plan plus details of its implementation shall be submitted as part of the program plan.

4.3.2.5 General Demonstration Test Provisions. The provisions of MIL-STD-781 apply except where they are in conflict with provisions given in this specification, whereas this specification takes precedence.

4.3.2.6 Specific Provisions.

(a) MTBF - The Specified Mean Time Between Failures (θ_o) is stated in Section 3 as 10,000 hours.

(b) Test Level - Test Level A-1,as defined in Section 4.1 of MIL-STD-781 shall apply.

(c) Definition of Failure - The contractor must submit for approval details of operational criteria and specific definitions of failure for the equipments under test.

(d) Sample Size - Three (3) operational receivers shall be available at the contractor's plant for the purpose of reliability demonstration tests.

(e) Preproduction Test Plan - Test Plan XXV of MIL-STD-781 shall be used, with a discrimination ratio of 3.0 and a and B risk of .30. The contractor has the option of submitting within 30 days an alternate statistical plan for approval. Any alternate plan would be based on the specific provisions in (a), (b), (c), and (d) above plus the constraint of a maximum testing period of 60 days calendar time.

(f) Production Qualification Test Plan - Test Plan C-6 of Table 2D-1(c) MIL HDBK-H 108 shall be used, with a discrimination ratio of 3.0 and an alpha and beta risk of .10. The sample shall be made from the first months production.

(g) Production Sampling Test Plan - Test Plan C-3 of Table 2D-1(e), MIL HDBK-H-108 with a discrimination ration of 5.0 and an alpha and beta ratio of .10 for acceptance of each months production.

4.3.3 Maintainability Demonstration. A maintainability demonstration shall be performed by the contractor to show compliance with the quantitative requirement of Section 3.9 for corrective maintenance. In conjunction with this requirement, the following portions of MIL-STD-471 apply.

4.3.3.1 Demonstration Plan. The contractor shall prepare a demonstration plan for approval by the contracting agency in accordance with 4.2 of MIL-STD-471.

4.3.3.2 Maintenance Task Selection. The contractor shall demonstrate compliance of the repair time specified in 3.9 through the fault simulation method. This method shall be performed by introduction of faulty parts, deliberate misalignments, etc. Simulated faults shall be generated for each anticipated failure mode of each module. The general technique of task selection as discussed in Appendix A of MIL-STD-471 for corrective maintenance tasks only shall apply. Since both the design and the maintenance concept are based on a modular construction of the receiver, then the maintenance task selection can be restricted to the characteristics of each module.

4.3.3.3 Sample Size. A minimum of 30 selected maintenance tasks shall be used for the maintainability demonstration.

4.3.3.4 Maintenance Task Performance. In accordance with 4.3.2 of MIL-STD-471.

4.3.3.5 Accept/Reject Criteria. Upon completion of all maintenance tasks, an accept decision shall be made if the 90th percentile point of the resultant distribution of observed maintenance times is equal to or less than 15 minutes for restoration of service and 180 minutes for module repair.

4.3.3.6 Maintainability Demonstration Report. In accordance with 4.5 of MIL-STD-471.

4.3.4 Performance Tests. The receiver shall be subjected to a broad spectrum of performance tests necessary to confirm that the basic design and the assembled equipment in fact have met the performance of requirements of this specification for both VHF and UHF operation. The performance tests shall include, but may not be limited to, the following operational parameters:

a. Frequency tuning range

b. Repeatability of tuning operation

c. Sensitivity

d. Selectivity

e. Local oscillator radiation levels

f. Desensitization

g. Cross-modulation

h. Output level

i. Output Level Regulation

j. Audio bandwidth characteristics

k. Hum and noise

l. Harmonic distortion

m. AGC characteristics

n. Squelch characteristics

o. AGC versus pulse interference

p. Squelch versus pulse interference

q. Pulse noise output

r. Frequency accuracy and stability

s. Conducted radiation and susceptability

4.3.5 Acceptance Tests. Prior to delivery of each completed receiver assembly, the contractor shall perform a thorough physical electrical and mechanical examination of the equipment to determine that all components and assemblies are in complete compliance with the requirements of this specification. In addition to the specific performance tests which have been accomplished and performed on the various modules, subassemblies, minor assemblies and major assemblies during the production phase, the contractor shall perform the final inspection on each deliverable article to include, but not necessarily be limited to, the following parameters:

a. Resettability of tuning controls

b. Audio distortion

c. Audio frequency response

d. Audio output level

e. Power supply ripple voltage

f. Sensitivity

g. Intermediate frequency bandwidth

h. Image rejection

i. Internal oscillator radiation level at antenna terminal

j. Radio frequency accuracy and stability

k. Automatic gain control operation

l. Squelch sensitivity

m. Noise limiter operation

n. Power consumption

o. Tuning range

p. Warm up time

4.4 Submission of Test Procedures and Data Forms. The contractor shall submit complete and comprehensive test procedures with appropriate forms for recording the results thereof, for performance tests required by this specification. The procedures and forms shall cover all tests described within this specification, and all other tests required but not described within this specification. The contractor shall identify all equipment to be utilized in each of the tests. MIL-STD-826 shall be used as a guide in the preparation of the test procedures, for equipment class Gp.

4.5 Sensitivity. With the squelch circuit in operation, inject a test signal of 1.5 microvolts across a 50 ohm load into the receiver antenna connection at a frequency of 225 MHz modulated 30% ± 5% at 1,000 Hz. Adjust the receiver output level control for an audio output of 100 milliwatts (7.75 volts). Remove modulation from the input signal; the resultant reading on the output meter shall be not more than 2.54 volts. Repeat the same measurements at 300 MHz and 399.95 MHz. (See 3.12 and Figs 1 and 2)

4.5.1 VHF Sensitivity. With the squelch circuit in operation, inject a test signal of 1.5 microvolts across a 50 ohm load into the receiver antenna connection at a frequency of 116 MHz modulated 30% ± 5% at 1,000 Hz. Adjust the receiver output level control for an audio output of 100 milliwatts (7.75 volts). Remove modulation from the input signal; the resultant reading on the output meter shall be not more than 2.54 volts. Repeat the same measurements at 133 and 149.95 MHz. (See 3.12 and Figs 1 & 2)

4.5.2 Sensitivity of Two Receivers Operated from One Antenna. Following the procedures prescribed in the Technical Order for connecting two receivers in parallel on a single antenna, and using two receivers or the same design, inject a signal of 2.0 microvolts modulated 30% ± 5% at 1,000 Hz into the single coaxial input across a 50 ohm load at each of the frequencies used for calculation of the interconnecting transmission lines. Adjust the receiver output level control (each receiver at its appropriate operating frequency) for an audio output of 100 milliwatts (7.75 volts). Remove modulation from the input signal; the resultant reading on the output meter shall be not more than 2.54 volts for each receiver. Performance shall be demonstrated on three pairs of frequencies on each band (VHF and UHF), with separations of 3 MHz on UHF and 1 MHz on VHF, and the frequencies located near the lower, middle, and upper limits of each band. (See 3.12.1 and 3.12.2)

4.6 Selectivity. Inject an unmodulated signal of 6 microvolts across a 50 ohm load into the receiver antenna input terminal. Adjust the input frequency to produce the design center frequency in the last intermediate frequency amplifier output. Record the resultant AGC reference voltage. Record the channel frequency as presented on the frequency counter, the settings of all attenuators, the AGC reference voltage and the frequency of the output intermediate frequency amplifier.

Set the attenuation to a value 6 db below the level above and adjust the frequency of the signal generator to a higher frequency which will produce the identical AGC reference voltage previously recorded. Record the frequency as presented on the frequency counter. Repeat this procedure and record the lower frequency which produces the same AGC reference voltage.

Using the same procedures, record the frequencies for attenuation levels of 20 db, 40 db, 60 db, and 80 db and define the profile of the selectivity curve which these measurements have produced. (See 3.12.3, 3.12.4, 3.12.5, 3.12.6 and Fig 4.)

4.7 Output Level Regulation. Inject a test voltage of 500 microvolts modulated 30% ± 5% (1,000 Hz) at a selected channel frequency. Connect a 600 ohm load to each output winding and set the audio gain control to an output level of 100 milliwatts (7.75 volts). Replace the main output load resistor with a resistor

of 120 ohms and measure the output voltage without changing the signal generator or receiver output level controls. The audio output level shall not be less than 4.9 volts across the 120 ohm resistor. (See 3.14.2 and Fig. 3)

4.8 Radio Frequency Intermodulation. A frequency counter shall be required for all frequency determinations in this test. Careful shielding must be incorporated throughout the test procedure or the results will not be acceptable. Connect two UHF signal generators through a hybrid isolation pad to obtain a dual signal input which does not produce intermodulation products from either signal generator. The receiver squelch shall not be operated for this test.

Set Generator No. 2 (f_b) to the receiver channel frequency. Adjust the signal generator for a 3 microvolt 30% modulated ± 5% test signal and adjust the receiver audio gain control for an output of 100 milliwatts (7.75 volts). Remove the signal.

Set Generator No. 1 (f_a) to a frequency 100 KHz above the channel frequency (unmodulated) and Generator No. 2 (f_b) to a frequency 200 KH_z above the channel frequency with 30% modulation ± 5% at 400 Hz.

With the output levels of both generators maintained at equal values, increase their outputs until a 3.875 volt level (25 milliwatts) main output signal is obtained. It may be necessary to retune one generator very slightly in frequency to maximize the audio output at the 3.875 volt output level. Record input levels, correcting for the isolation pad and other insertion losses in the system when the 3.875 volt output occurs.

Repeat the above procedure with Generator No. 1 (f_a) at a frequency 100 KHz below the channel frequency (unmodulated) and Generator No. 2 (f_b) 200 KHz below the channel frequency 30% modulated ± 5% at 400 Hz. Again increase the signal levels of both generators equally to obtain an output voltage of 3.875 volts at the main receiver output. These tests shall demonstrate that input signal levels at the antenna terminal of the receiver must be in excess of 10,000 microvolts to overcome the RF intermodulation immunity required by this specification. Repeat the entire test procedure on VHF. (See 3.22 and Fig 5)

4.9 Desensitization. Set the frequency of Signal Generator No. 1 to 300 MHz with an output signal of 3 microvolts across a 50 ohm load and modulated 30% ± 5% at 1,000 Hz. Set the audio output control to an output of 100 milliwatts (7.75 volts) at the main output of the receiver. Set the frequency of Signal Generator No. 2 alternately to each of the prescribed undesired frequencies and at the signal levels prescribed in 3.21 to determine the desensitization experienced in each of the prescribed off-resonant frequencies and signal levels. In each of the specified conditions, the application of the off-resonant signal shall not reduce the receiver output more than 2 db (a measured level of 6.15 volts) as recorded on the main audio output. Repeat on VHF, using a center frequency of 133 MHZ. (See 3.21 and Fig 6)

4.10 Cross-Modulation. The attenuator of Signal Generator No. 2 shall be in the position of maximum attenuation. Set Signal Generator No. 1 to an output control to obtain a level of 100 milliwatts (7.75 volts) at the main output of the receiver. Remove modulation from Signal Generator No. 1 leaving all other controls unchanged. Apply 90% modulation ± 5% to Signal Generator No. 2 at a modulation frequency of 400 Hz and output frequency of 300.9 MHz and an output level of 100,000 microvolts across a 50 ohm load. Gradually increase the unmodulated carrier from Signal Generator No. 1 to a level of 100,000 microvolts, noting all points at which the receiver audio output voltage reaches a peak. Record Signal Generator No. 1 RF output levels and receiver audio output levels at each of these peak points.

At each of the maximum audio output points noted above, set the attenuator of Signal Generator No. 2 to the point of maximum attenuation and record the receiver output noise level. The peak levels and the noise levels shall not differ more than 3 db. Repeat the procedure for all frequencies and signal levels specified in 3.21. (Also see Fig 6)

4.11 Hum and Noise. Adjust the signal generator for a channel frequency of 300 MHz 30% modulated ± 5% at 1,000 Hz and the output adjusted to 300 microvolts across a 50 ohm load. Set the audio output control of the receiver to a level of 100 milliwatts (7.75 volts) at the main audio output.

With the equipment operating on a 60 Hz power source, connect a wave analyzer to the receiver output and determine the amplitude of all detectable signals at 820, 880, 1060, 1120 and 1180 Hz. The total calculated RMS voltage at the above measured frequencies shall be at least 50 db down from the 7.75 volt level or 0.0245 volts. The total calculated RMS voltage is to be derived by taking the square root of the sum of the squares of the measured voltages. Repeat this procedure with the equipment operating on 50 Hz AC power and the audio measurements made at 850, 900, 1050, 1100 and 1150 Hz; with the equipment operating on 400 Hz power, measurements shall be accomplished at 200, 600, 1400, 1800 and 2200 Hz. Repeat the same test procedure with an RF input signal level of 100,000 microvolts (0.1 volt).

Remove modulation from the signal generator with the equipment operating at each of the specified AC power frequencies and record the resultant AC hum with RF signal inputs of 100,000 microvolts and 300 microvolts. The hum level in each case shall be at least 50 db below 100 milliwatts (See 3.20 and Fig 3)

4.12 Harmonic Distortion. Adjust the RF signal generator to a frequency of 300 MHz, an output level of 1 volt across a 50 ohm load modulated 30% ± 5% at 1000 Hz and adjust the receiver audio level to an output of 100 milliwatts (7.75 volts). With modulation frequencies of 300, 1,500, 3,000 and 6,000 Hertz successively applied to the signal generator, the total harmonic distortion as measured with the wave analyzer shall not exceed 10%. Repeat the measurement procedure with a modulation level of 90% at the same modulation frequencies and measure the total harmonic distortion. The total distortion at the 90% modulation level shall not exceed 15%.

Repeat the harmonic distortion tests at the same radio frequency input levels and the same modulation levels and frequencies, but with the receiver audio level control adjusted to an output level of 1 milliwatt (.775 volts). All distortion requirements previously specified shall be met. (See 3.25 and Fig 3)

4.13 Automatic Gain Control Versus Modulation Level. Adjust the signal generator to an output frequency of 300 MHz with an output of 6 microvolts across a 50 ohm load and modulated 30% ± 5% at 1,000 Hz. Adjust the receiver audio output level to 100 milliwatts (7.75 volts) at the main audio output. Measure the AGC voltage under these conditions. Adjust the modulation level down to zero and up to 90% ± 5% and record the AGC voltages. The recorded AGC voltage shall not vary more than ± 1% during these variations of modulation level.

4.14 Automatic Gain Control Versus RF Signal Level. Adjust the RF signal input levels successively to 6, 10, 15, 20, 30, 100, 1,000, 10,000, 100,000, 200,000 and 500,000 microvolts and 1 volt with modulation levels of 10%, 30%, and 50% ± 5% at each signal level and a modulation frequency of 1,000 Hz. The audio output level measured at the main receiver audio output shall not vary more than 3 db at each modulation level, as the RF signal voltages are advanced from 6 microvolts to 1 volt. (See 3.15 and Fig 3)

4.15 AGC Time Constant. Adjust a pulse type signal generator to an output frequency of 300 MHz and a signal level of 500 millivolts. The signal shall be pulsed with a 500 millisecond pulse having a rise time of not more than 1 millisecond and a decay time of not more than 1 millisecond. The pulse shall be synchronized with a cathode ray oscilloscope to present a calibrated sweep for the measurement of the rise time of the AGC voltage and the decay time of the AGC voltage. The AGC shall rise to a value at least 90% of the AGC maximum voltage within a time period of 100 milliseconds and shall decrease to a level of not more than 10% of its zero signal level in a decay time of not more than 100 milliseconds and shall decrease to a level of not more than 10% of its zero signal level in a decay time of not more than 100 milliseconds. (See 3.15.1)

4.16 Squelch Characteristics. With the squelch sensitivity at maximum setting, an unmodulated carrier of 1.5 microvolts applied across a 50 ohm load shall activate the squelch circuit at RF input frequencies of 225, 300, and 399.95 MHz. A test signal of 2 microvolts applied across a 50 ohm load modulated 30% ± 5% shall activate the squelch circuit at each of the prescribed frequencies and be capable of producing an audio output level of at least 100 milliwatts. Repeat at 116, 133, and 149.95 MHz. (See 3.16 and Fig 3)

4.17 Squelch Versus Pulse Interference. Adjust the signal generator and the receiver to a frequency of 300 MHz and adjust the squelch threshold to activate at a signal level of 3 microvolts (unmodulated) across a load of 50 ohms. Remove the unmodulated carrier and apply a pulse signal with a peak amplitude of 3,000 microvolts, a pulse repetition frequency of 300, 360, and 420 pulses per second, a pulse width of 10 microseconds ± 1 microsecond with a 1 microsecond maximum rise time and determine whether the squelch circuit of the receiver is activated by the pulsed signal. Repeat this measurement at the same squelch threshold, but

with an unmodulated carrier level of 2 microvolts and a peak pulse amplitude of 1,000 microvolts. Again repeat the procedure with a squelch threshold of 50 microvolts, a carrier level of 37.5 microvolts (unmodulated) and a peak pulse amplitude of 5,000 microvolts. The squelch circuit shall not be activated under any of these signal combinations. Repeat all of the above measurements with the pulse width adjusted to 2 microseconds ± 1 microsecond, a pulse repetition rate which shall be varied from 300 to 1,500 pulses per second and a rise and decay time of less than 1/10 microsecond. The squelch circuit of the receiver shall not be activated by the above signal combinations and no parasitic effects such as ringing or regeneration of any internal receiver circuit shall be apparent during the performance of these tests. (See 3.19 and Fig 7)

4.18 Audio Frequency Response. Adjust the RF signal generator to a channel frequency of 300 MHz with an output carrier level of 300 microvolts modulated 30% ± 5% at 1,000 Hz. Adjust the receiver audio output control to a level of 100 millivolts (7.75 volts) at the main audio output. While retaining the same carrier level in the signal generator and the same modulation level, adjust the modulation frequency alternately to 100, 200, 300, 500, 1,000, 2,000, 3,000, 4,000, 6,000, and 10,000 Hz and record the audio output voltage for each modulation frequency. The output level shall not vary more than +1 db or -2 db between 300 and 6,000 Hz, but the level shall decrease continuously below 300 Hz and shall decrease continuously above 6,000 Hz and shall be down at least 10 db at the 100 Hz and 10,000 Hz modulation frequencies. (See 3.24 and Fig 3)

4.19 Frequency Accuracy and Stability. Utilizing the standard tuning procedures prescribed by the Technical Order and utilizing a crystal of the prescribed specification, the receiver shall be tuned to 116, 133, and 150 MHz without benefit of the frequency counter and shall operate within ± .001% of the specified channel frequency. Accuracy and stability shall be maintained over the environmental range of 3.4. A calibrated frequency counter shall be used to verify the accuracy after the tuning operation has been completed. Repeat procedures on 225, 300 and 399.95 MHz. (See 3.11.3)

4.19.1 Effect of Detuning and Retuning. The receiver shall be detuned to the limit of the tuning controls from the operating frequencies and then returned to the specified channels (again using the prescribed Technical Order procedures). Each frequency shall be within the previously specified accuracy of ± .001% of the operating frequency without benefit of any external frequency measuring device during the tuning process.

5. PREPARATION FOR DELIVERY

5.1 General. Preservation, packaging, and marking shall be in accordance with MIL-STD-129, and as specified in the contract.

5.2 Individual Packing. Each unit with its accessories shall be packed and marked so that it can be identified and reshipped individually without repacking.

6. NOTES

6.1 Intended Use. The single channel VHF/UHF receiver described in this specification is intended for worldwide use in the air traffic control environment. Typically it may be installed at remotely controlled receiver sites or collocated VHF/UHF transmitter/receiver sites or locally within the equipment areas of radar approach control (RAPCON) facilities or control towers. The receiver also may be installed in ground control approach (GCA) and Mobile RAPCON facilities. At remote locations such as radar early warning sites, it may be collocated with VHF/UHF transmitters and it may be required to use the same antenna as the transmitters, with suitable antenna switching relays or multi couplers (which are not included in this specification). The receiver normally will be installed in 19" racks or cabinets in multiple quantities commensurate with the number of air traffic control communication channels authorized for use at the individual air traffic control station or facility.

6.2 Concept of Design. The intent of this specification is to produce a reliable transistorized VHF/UHF communications receiver which may be expected to operate in excess of 1 year in a typical air traffic control environment without failure of parts or performance. To achieve this level of reliability, the parts count must be held to a minimum figure consistent with good design, and all components must be derated for electrical and thermal stresses to avoid premature failures in service. Protective circuitry designed to isolate the operating semiconductor devices and their associated components from destructive transients also is expected to contribute to the long life and reliability of the receiver. The receiver also will allow the use of a battery powered (24 volt) DC bus which may be floated across the power supply; the combination of receiver reliability and the availability of the battery powered DC bus is expected to provide a receiving system with all of the advantages and characteristics of no-break power. The versatility of the receiver is further enhanced by its compatibility with AC power frequencies ranging from 47 Hz to 420 Hz with voltage stability in the order of ± 10% of the nominal voltages. Such flexibility will enable the receiver to utilize relatively unstable and unreliable power sources which normally could not be considered for regular use in the air traffic control service. Any design concept which is not consistent with this goal of reliability and availability for service cannot be considered compatible with the intent of this specification and will be considered as not responsive to this specification.

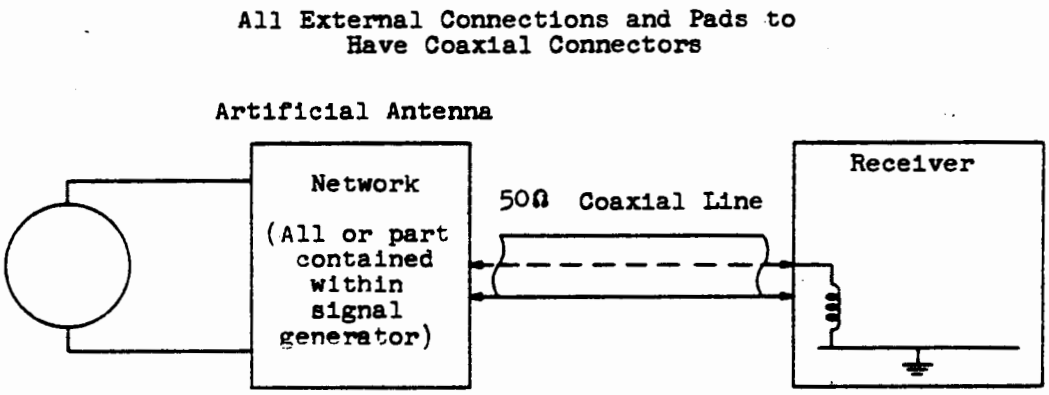

FIGURE 1

CONNECTION OF SIGNAL GENERATOR TO RECEIVER

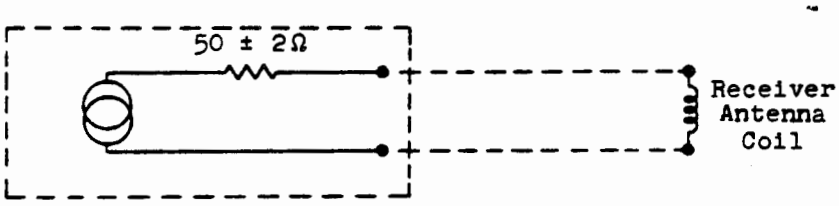

FIGURE 2

EQUIVALENT CIRCUIT OF ARTIFICIAL ANTENNA

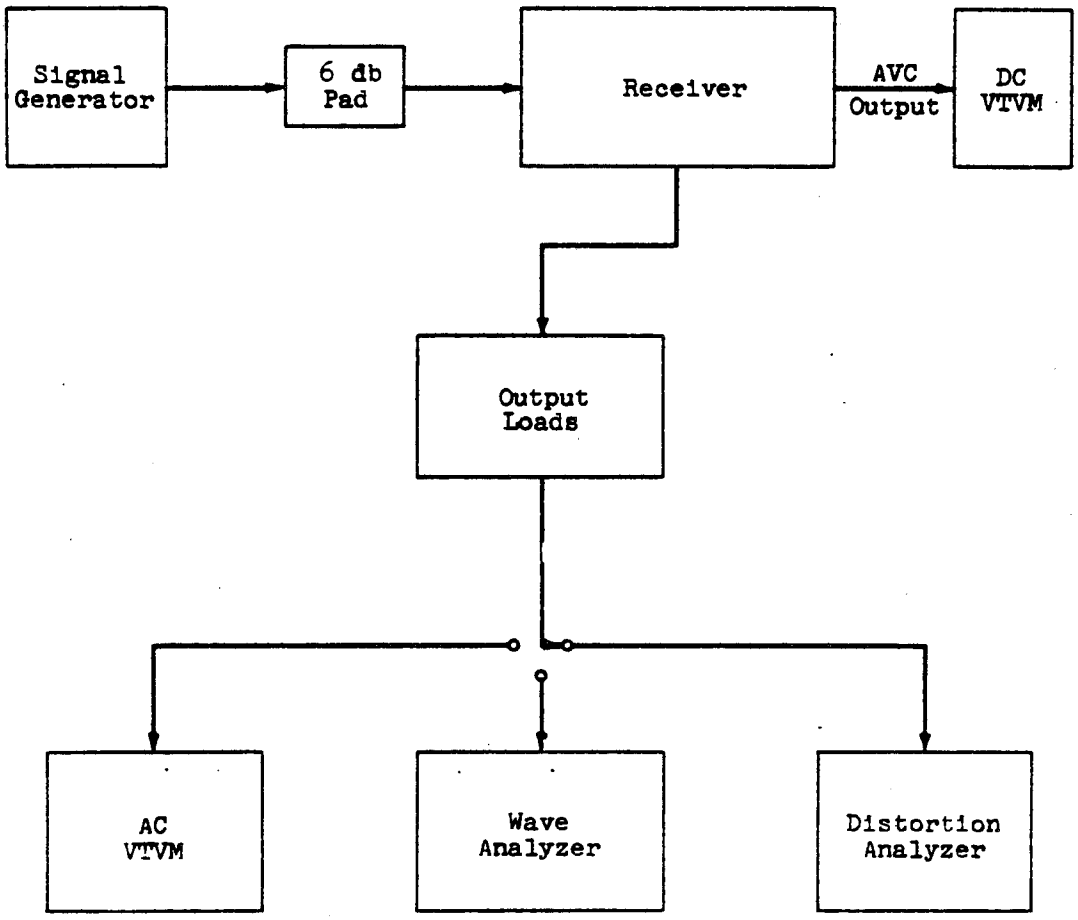

FIGURE 3

DISTORTION TEST

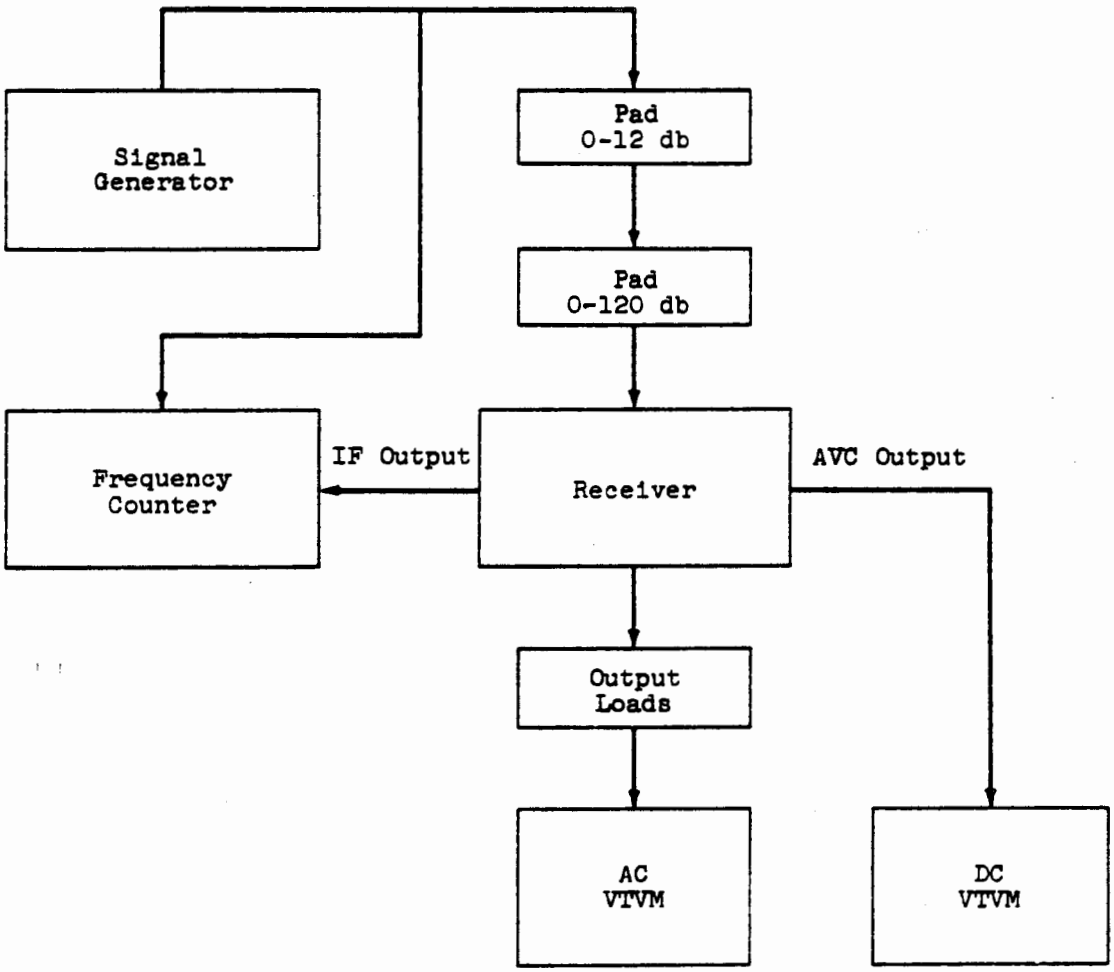

FIGURE 4

SENSITIVITY/SELECTIVITY/STABILITY TESTS

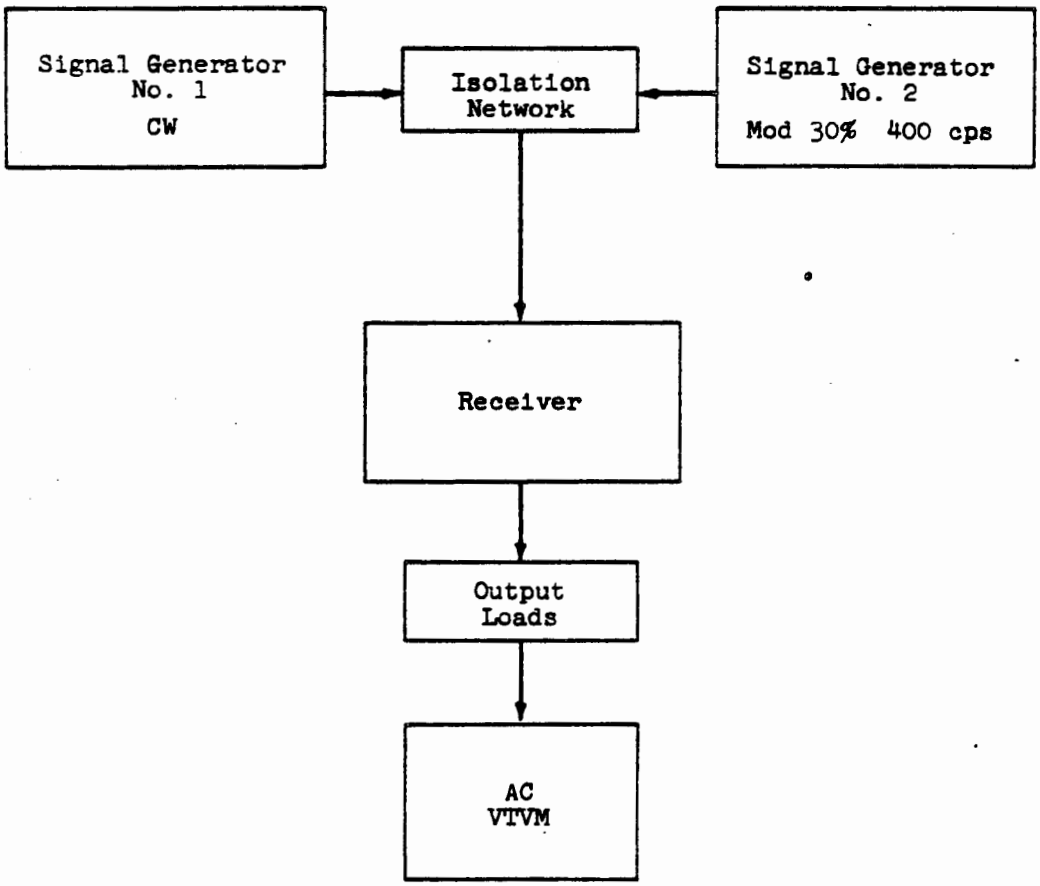

FIGURE 5

INTERMODULATION TEST

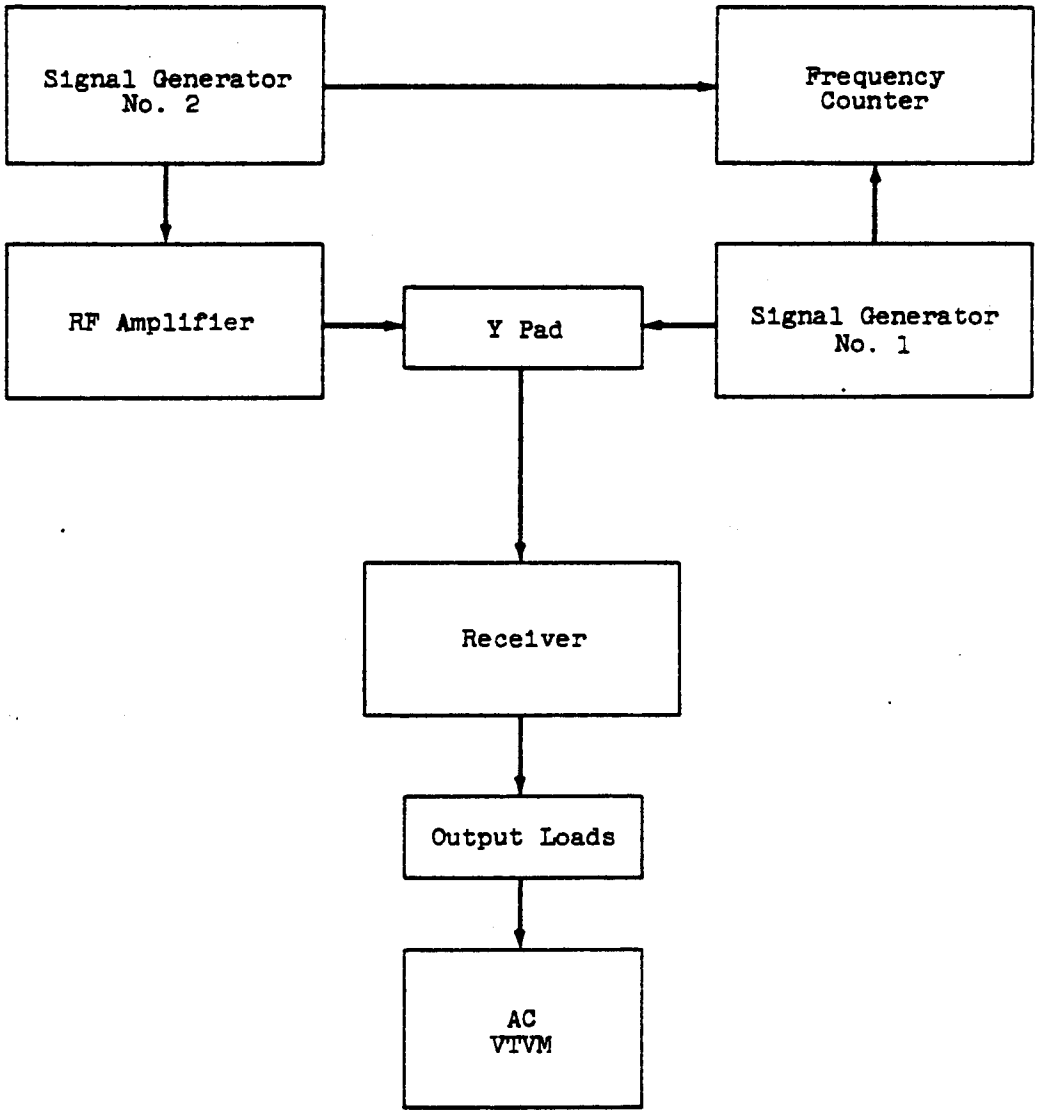

FIGURE 6

CROSS-MODULATION/DESENSITIZATION TESTS

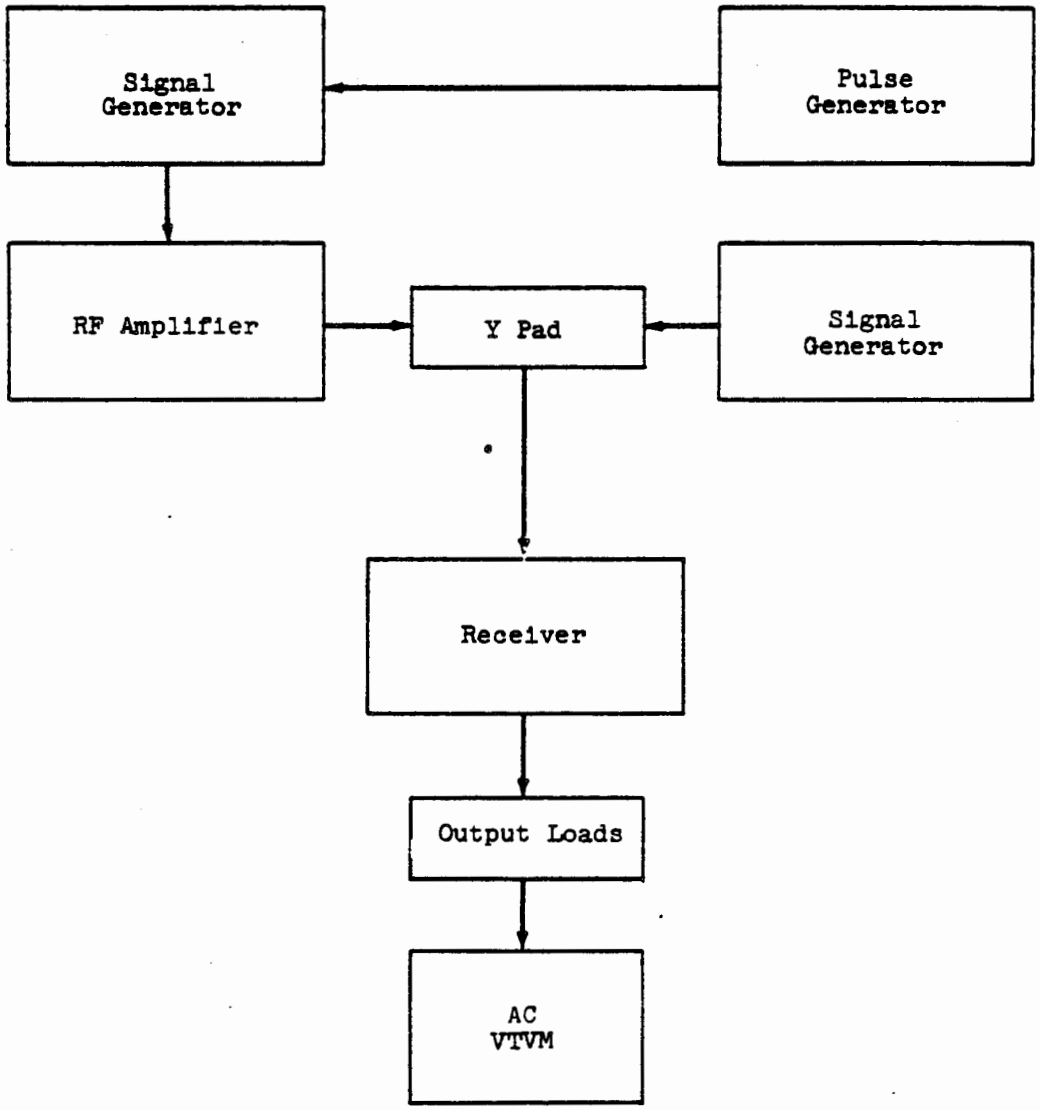

FIGURE 7

PULSE INTERFERENCE TESTS

VHF/UHF TRANSMITTER AN/GRT ( )

1. SCOPE

1.1 This equipment specification describes a reliable single channel transistorized communications transmitter to be installed in collocated VHF/UHF transmitter/receiver ground stations engaged in the air traffic control service throughout the world. The transmitter shall be capable of generating an amplitude modulated (voice) signal in the 116 to 150 MHz and 225 to 399.95 MHz air traffic control communications bands. The transmitter shall be capable of operating on each of the authorized VHF and UHF air traffic control communications channels and shall be compatible with the 50 KHz channel spacing and transmitter/receiver collocation required in that service. The design and construction of the transmitter shall facilitate a possible future modification for conversion to 25 KHz channel spacing. The transmitter shall be expected to operate reliably for long periods of time under normal operations. The transmitter shall consist of a transistorized exciter of not less than 10 watts power output and linear amplifier with a minimum carrier power output of 50 watts. The transmitter shall contain a minimum parts count consistent with good design and shall contain all of the design characteristics required to achieve an MTBF of at least 10,000 hours.

2. APPLICABLE DOCUMENTS

2.1 The following documents, of the issue in effect on the date of the invitation for bids or request for proposals, form a part of this equipment specification. In the event of conflict between the requirements of this equipment specification and the requirements of the referenced documents, the requirements of this equipment specification shall govern.

<u>Military Specifications</u>

MIL-P-116	Preservation
MIL-C-3098	Quartz Crystals
MIL-E-4158	Ground Electronic Equipment, General Requirements
MIL-E-4682	Electron Tubes and Transistors
MIL-C-6781	Control Panel, Aircraft Equipment
MIL-N-7513	Nomenclature Assignment and Nameplate Approval

MIL-Q-9858	Quality Program Requirements
MIL-S-19500	Semiconductor Devices
NAVSHIPS 94324	Maintainability Design Handbook
NAVSHIPS 94501	Reliability Design Handbook

Military Standards

MIL-STD-129	Marking for Shipment
MIL-STD-130	Identification Marking of U. S. Military Property
MIL-STD-188	Military Communication System Technical Standards
MIL-STD-189	Racks, Electrical EQ, 19" and Associated Panels
MIL-STD-415	Test Points
MIL-STD-454	Standard General Requirements for Electronic Equipment
MIL-STD-470	Maintainability Program Requirements
MIL-STD-471	Maintainability Demonstration
MIL-STD-683	Crystals and Holders
MIL-STD-781	Test Levels and Accept/Reject Criteria
MIL-STD-785	[redacted] Reliability Program
MIL-STD-803	Human Engineering
MIL-STD-810	Environmental Test Methods
MIL-STD-826	Electomagnetic Interference Test Requirements
MIL-STD-831	Preparation of Test Reports

Federal Standards

FED-STD-595	Paints

Military Handbooks

MIL-HDBK-216	Radio Transmission Lines and Fittings
MIL-HDBK-217	Reliability Stress and Failure Rate Data for Electronic Equipment

Technical Orders

31P5-2-137	Standard Installation Instructions, RAPCON Communication Facility
31R2-1-137	Standard Installation Instructions, Control Tower Facility
31S1-2FSA22-10	GEEIA Installation Standard, Control Monitor Group AN/FSA-22

AF Manuals

AFSCM 80-3	Handbook of Design Instructions
AFLC/AFSCM 310-1	Management of Contractor Data and Reports

Miscellaneous

OTS PB-161894 RADC Reliability Notebook (RADC-TR-58-111)

ICAO International Standards and Recommended Practices (Annex 10)

ITU Radio Regulations (Geneva 1959)

3. REQUIREMENTS

3.1 Performance. The single channel transmitter described in this specification shall be designed for worldwide deployment in the air traffic control service and shall operate on any of the 3,500 channels allocated to this service between 225 and 399.95 MHz and also on any of the 680 channels between 116 and 150 MHz. The transmitter shall be compatible with the 50 KHz channel spacing of the air traffic control service, but shall be designed to permit a future conversion to operate on any of the 7,000 channels within the same UHF band or 1360 channels within the VHF band with a spacing of 25 KHz between adjacent channels. The exciter portion of the transmitter shall be capable of operating directly into a suitable antenna, thus providing a minimum of 10 watts power output when the 50 watt power amplifier is not required or is otherwise not in service. The transmitter shall represent the state-of-the-art in reliability and shall contain parts and workmanship of the highest quality. The transmitter shall perform reliably in an air traffic control environment which may include air traffic control towers, radar approach control facilities (RAPCON's) and precision approach radar facilities such as GCA's and mobile RAPCON's. Typically the transmitter will be installed in remotely controlled transmitter sites and collocated VHF/UHF transmitter/receiver sites and will be mounted in racks or cabinets in multiple quantities commensurate with the number of air traffic control channels in use at those stations.

3.1.1 Type of Construction. Modular construction shall be utilized throughout the transmitter. The transistorized exciter unit shall constitute one assembly (complete with its own power supply) which may be deployed independently from the linear amplifier. The power amplifier also shall be a separate and independent assembly containing its own power supply. The internal construction of both assemblies shall be modular and shall facilitate the rapid exchange of minor assemblies for rapid restoration of service in case of failure. Assemblies and subassemblies may be exchanged for similar modules when the transmitter is converted from VHF to UHF coverage. All cables, connectors and voltages shall be compatible among the VHF/UHF conversion assemblies to allow full flexibility of employment and interchange. The exciter

portion of the transmitter shall contain no blowers and shall not require forced air cooling for normal operation. The design goal is to avoid the use of blower assemblies in the power amplifier to minimize the number of electromechanical devices and achieve increased reliability. Blower assemblies are not authorized in this specification and no such authorization shall be assumed unless specifically approved in writing by the Contracting Officer after the contractor has demonstrated that no other solution can be employed in the transmitter design and his proposal has been approved after a thorough engineering evaluation. Any blower assembly recommended by the contractor shall have a demonstrated reliability of at least 1 year of continous duty operation without failure or maintenance, and the air flow through the amplifier shall be oriented from the front to the rear of the assembly. Ventilation ports (intake or exhaust) shall not be located on either side of the exciter or power amplifier. Air filters (if required) shall be located on the front panel and shall be of the washable re-usable type. Printed circuit boards shall not contain mechanical linkages. Printed circuit boards and modules shall be so constructed that removal and installation require a minimum of tools and soldering.

3.1.2 Physical Size of Equipment. The exciter portion of the transmitter shall require not more than 5-1/4" of panel space (Panel per MIL-STD-189). The power amplifier shall require not more than 7" of panel space (Panel per MIL-STD-189). Each assembly shall mount in a standard 19" rack or cabinet and shall have a maximum depth of not more than 15" behind the front panel. The two major assemblies shall constitute the entire transmitter, including all power supplies and control circuit assemblies.

3.1.2.1 Weight of Equipment. Total weight of the transmitter shall not exceed 70 lbs. with neither the exciter assembly nor the amplifier assembly to exceed 35 lbs. A design goal of 54 lbs. shall be maintained by the contractor in the evaluation of all design techniques.

3.1.2.2 Dust Covers and Insect Screens. In addition to radio frequency shielding required to achieve the technical performance prescribed for the transmitter, suitable dust covers and insect screens shall be provided as a part of the enclosure. Insect screens shall be not larger than 16 mesh for protection of heat exhaust ports or other openings not secured by dust covers.

3.1.3 Interchangeability of Modules. Modules contained in the transmitter shall be interchangeable with modules performing the same functions in other transmitters of the same production type. Interchangeability of modules between transmitters of the same type shall be accomplished and demonstrated without necessity for realignment of the electrical circuits contained in the interchanged modules and without realignment of the circuits contained in adjacent modules of the transmitter. All assemblies, subassemblies, printed circuit boards, and modules shall be accessible for testing or replacement, and shall facilitate rapid fault location and restoration of service by direct replacement.

3.2 Prototype Equipment. Eight (8) preproduction equipments shall be required for testing. Two (2) transmitters shall be utilized for in-plant environmental and proof or performance testing. Three (3) operational transmitters shall be subjected to continuous operation at the contractor's plant for a period of approximately sixty (60) days to determine whether the equipment has met the design goals in terms of reliability, maintainability, and compatibility with a simulated air traffic control environment test program. Three (3) transmitters shall be furnished to the Air Force for simultaneous operational suitability tests. The 3 equipments furnished for operational suitability testing shall be shipped to an Air Force site to be designated by the Contracting Officer. Air Force testing will be performed at the site for approximately sixty (60) days. The contractor shall be responsible for support of all preproduction equipments during the entire test program including installation assistance, familiarization of Air Force personnel with the equipment, supply of parts and interim instruction manuals and correction of repair of failures.

3.3 Flexibility of Primary Power. All power transformers shall be provided with primary taps to furnish the required rectifier voltages for AC line voltages of 105, 120, 210, and 240 volts ± 10%. Note that this specification requires normal operation of the equipment with input voltages within ± 10% of the specified primary voltages. Tap changing of all appropriate transformers shall be accomplished simultaneously by setting a metal link or strap. Unless otherwise specified in the contract, taps shall be connected for 120 volt operation upon delivery. The transmitter shall operate at full rated power from single phase alternating current sources at any power frequency from 47 Hz to 420 Hz. In addition to operation on the AC voltages previously listed, the transmitter shall have provisions whereby a nominal 24 volt

DC battery bus may be floated across the power supply to provide emergency power in the event of failure of AC power. The AC power supply also shall recharge the 24 volt battery and maintain it in a fully charged condition without overcharging or causing damage to any component in the transmitter. The transmitter shall be so designed that application of a short circuit or voltage of a reversed polarity across the 24 volt terminals shall not result in failure of components (other than fuses) within the transmitter. Elimination of fuses shall be considered as a design goal by the contractor through prudent employment of isolation diodes and other reliable protective devices; any fuses incorporated in the design shall be of the self-indicating type and shall be mounted on the front panel of the transmitter. The exciter shall be capable of rated performance while being operated on DC power from the 24 volt bus; the power amplifier may be disabled during DC operation if it contains vacuum tubes or semiconductor devices which are unable to achieve an operational condition from the DC bus.

3.4 Normal Operating Conditions

Ambient Temperature	-29°C to +60°C
Relative Humidity	5% to 95% (± 5%)
AC Line Voltage	120 V ± 10%; 240 V ± 10%
AC Line Frequency	47 to 420 Hz
DC	22 to 30 Volts
Duty Cycle	Continuous Unattended at Rated Power 90% Modulated

3.4.1 Non-Operating and Storage Conditions.

Ambient Temperature	-62°C to +71°C
Relative Humidity	5% to 95%
Barometric Pressure	3.34 Inches Hg to 31 Inches Hg

3.4.2 Operation After Transportation. The transmitter shall be required to operate immediately after being transported from one location to another, either while installed in a GCA or mobile RAPCON facility, or while being transported in the custody of the military supply system. The transmitter shall not be required to operate while installed or carried in a vehicle in motion.

3.5 General Requirements. The equipment shall meet the requirements of MIL-STD-454 and MIL-E-4158 regarding design, parts, materials, processes, identification and marking, and workmanship except as otherwise noted in this specification. The total weight and volume of this

equipment shall be reduced as far as possible without sacrificing reliability or maintainability. The contractor shall employ all methods possible in the process of design, development and manufacturing which will insure quality and maximum reliability and maintainability. The design shall include all possible features which produce reliable and stable operation with minimum requirements for adjustments and maintenance. Conservative design practices with ample operating margins shall be employed throughout. The contractor shall be familiar with NAVSHIPS 94324, NAVSHIPS 94501, AFSCM 80-3, and the RADC Notebook, and shall make maximum use of the design guides therein. (See 4.3 through 4.3.3.6)

3.6 Reliability. The design reliability of the transmitter and its components shall achieve a Specified Mean Time Between Failures of not less than 10,000 hours under conditions of MIL-STD-781, level A-1. Vacuum tube (s) employed in the power amplifier may be excluded from the parts count in the computation of this MTBF: however vacuum tube (s) shall have a Mean Time to Failure of at least 3,000 hours in this application.

3.6.1 Reliability Program Plan. The contractor shall submit to the procuring activity for review and acceptance an effective and economical proposed program plan responsive to MIL-STD-785. The plan shall be included in the contractor's proposal submitted in accordance with the Governments's Request for Proposals (RFP).

3.6.2 Reliability Prediction. Reliability prediction shall be performed in accordance with procedures of MIL-STD-785 (5.1.9.1). The contractor shall submit as part of the technical proposal, a reliability prediction in accordance with MIL-STD-756, using failure rate data furnished in MIL Handbook 217.

3.6.3 Derating of Components. Quality components selected for their long life and reliability shall be used throughout the transmitter and shall be derated in each specific application to achieve the lowest practicable failure rate as reflected for each component class in MIL Handbook 217.

3.7 Reliability Analysis. The contractor shall analyze existing designs and techniques to determine the methods necessary to satisfy the reliability requirements of this specification.

3.7.1 Preliminary Reliability Estimate. Within 45 days of contract award, in accordance with 5.1.9.1 of MIL-STD-785, the contractor shall prepare and submit a Preliminary Reliability prediction of the transmitter. The failure rates shall be obtained from MIL-Handbook 217

for the classes of components and the voltage and thermal stresses involved. (See 4.3.2)

3.7.2 Final Reliability Estimate. As the design of each major assembly or subassembly is established, the contractor shall compute and submit within 30 days the Final Reliability Estimate of that assembly and update the estimated reliability index for the transmitter.

3.7.3 Test Conditions. Because of the MTBF requirement of this transmitter, the limited number of test articles and the limited time for testing, test level A-1 of MIL-STD-781 shall apply.

3.8 Maintainability. All assemblies, subassemblies and components of the transmitter shall be readily accessible for maintenance, to accelerate and facilitate the location of faults and the replacement of faulty modules or subassemblies. The maximum time for location of the fault, replacement of the faulty module or subassembly and restoration of service shall not exceed 15 minutes. Time shall not exceed 180 minutes for repair of the module itself, including checkout and alignment. (See 4.3.3)

3.8.1 Maintainability Program Plan. The contractor shall submit to the procuring activity for review and acceptance, an effective and economically proposed program plan responsive to MIL STD 470. The plan shall be included in the contractor's proposal submitted in accordance with the government's request for proposal.

3.9 Contractor's Quality Assurance System. The contractor shall provide and maintain an effective inspection and quality assurance system acceptable to the Government and in accordance with MIL-Q-9858. A current written description of the system shall be submitted to the cognizant Government inspector for system approval prior to preproduction inspection. Any changes to the approved quality assurance system which might affect the degree of assurance required by this specification or other applicable documents must be submitted to the cognizant inspector and approved in writing prior to use.

3.9.1 Government Verification of Contractor's Quality Assurance System. All quality assurance operations performed by the contractor shall he subject to Government verification at any time. Verification shall consist of, but not be limited to:

a. Surveillance of the operations to determine that practices, methods, and procedures of the written system description are being properly applied, and;

b. Government product inspection to measure quality of product to be offered for acceptance. Failure of the contractor to correct deficiencies discovered by him or of which he is notified shall be cause for suspension of acceptance until corrective action has been made or until conformance of product to prescribed criteria has been demonstrated.

3.10 Protective Circuitry. The transmitter shall contain suitable semiconductor protective circuitry to isolate all active audio and radio frequency transistors and semiconductor devices from destructive transient voltages or spikes introduced into the transmitter from the AC power line and the DC bus. The protective circuits shall react to short duration transients occuring either at a random or recurring rate and shall become effective within 100 nanoseconds of the leading edge of the transient pulse. The protective semiconductor devices shall be effective against transients up to 4 times the amplitude of the ambient voltage in the circuits to be protected and shall not disable the transmitter during their protective operation. The contractor shall demonstrate that adequate transient voltage protection has been provided for all semiconductors, including those associated with the RF output circuits and power supply circuits.

3.10.1 Protection from High VSWR. Protective circuits activated by Voltage Standing Wave Ratios (VSWR) greater than 3:1 shall be provided in the 10 watt exciter to protect the output transistors from destructive conditions produced by high levels of reflected RF power.

3.11 Test Points. The contractor shall prepare a List of Proposed Test Points in accordance with 4.4.2.4 of MIL-STD-415 to be delivered at the same time as the Preliminary Reliability Estimate (3.7.1).

3.11.1 Major Test Points. Major test points necessary to confirm proper operation of the transmitter and necessary in the location of faults in major modules shall be available on the front panel and shall be sufficient to identify major modules, assemblies, or subassemblies which may have failed or deteriorated in service.

3.11.2 Minor Test Points. Minor test points required during bench testing or alignment procedures shall be readily available upon removal of dust covers and shall be sufficient to identify faults or deteriorated performance within each printed circuit card or minor subassembly of the transmitter. Test points shall be readily identified and cross-referenced in the handbook of maintenance instructions which also shall contain reference to necessary waveforms, voltage, current, or resistance readings that may be appropriate for the individual test points.

3.11.3 Built-in Tuning Meters. A ruggedized and protectively fused tuning meter shall be built into the exciter assembly with a suitable switching circuit to provide all necessary measurements during a normal tuning process. The meter also shall provide a measurement of forward power and reflected power in the exciter output circuit and modulation percentage measurement.

3.11.4 Power Amplifier Metering. One or more ruggedized and protectively fused meters shall be provided in the power amplifier assembly for proper tuning and loading of the amplifier stage. Provision also shall be made for measuring forward power and reflected power in the output transmission line, using one of the integral meters in the amplifier assembly.

3.11.5 Metered Circuits. Circuits to be metered shall include, but shall not be limited to the following:

a. All voltages and currents necessary to confirm or establish normal equipment operation.

b. Voltages and currents necessary to isolate operational trouble in coordination with the use of major test points (3.11.1).

c. Forward power and reflected power in the RF transmission line.

d. Audio input level in dbm across a 600 ohm load.

e. Modulation level in percent.

3.11.6 Meter Selector Switch. A clearly designated rotary selector switch shall be included with the necessary meters and meter shunts. The combined accuracy of the meter, meter shunts and other associated circuitry shall be within ± 10% on power and modulation and within ± 5% on voltage and current.

3.12 Automatic Switching of Antenna. To achieve the maximum operational reliability of the exciter and to avoid reliability limitations imposed by the power amplifier, provisions shall be incorporated for automatically switching the antenna from the amplifier to the exciter output stage in case of amplifier failure or primary AC power failure.

3.12.1 Antenna Switching by Semiconductor Devices. To avoid the use of electromechanical relays, the contractor shall design and devise semiconductor switching techniques for automatically transferring the antenna from the amplifier to the output stage of the exciter. The semiconductor switch also shall return the antenna to the amplifier upon restoral of AC power or restoral of operational capability to the amplifier. Substitution of electromechanical relays for the semiconductor switches shall not be authorized unless specifically requested by the contractor with fully explained justification and specifically approved in writing by the Contracting Officer after a thorough engineering evaluation.

3.12.2 Antenna Change-Over (Transmit-Receive) Relay. A suitable output circuit shall be provided for activating an external 24 volt DC antenna change-over relay (not to be furnished under this specification) in synchronization with the carrier control circuits. An output voltage of 24 volts DC shall be available to supply the change-over relay, with a current capability of at least 100 milliamperes. The external relay circuit shall be sufficiently filtered to prevent the external leakage of radio frequency from the transmitter and to prevent the introduction of external radio frequency signals into the transmitter. The relay control voltage shall be available when the equipment is operated from AC or DC supplies with or without the amplifier in operation and shall contain current limiting circuitry incorporating nondestructive devices to protect the switching circuits in case of external short circuits.

3.12.3 Antenna Connectors. The radio frequency output circuit shall be designed for connection to a 50 ohm unbalanced flexible coaxial cable through a constant impedance N-type connector at the rear of the equipment.

3.13 Harmonic and Spurious Outputs. The level of each spurious frequency at the transmitter output connector including harmonics of the carrier frequencies at all modulation percentages up to 90% and frequencies up to 1,000 MHz shall be at least 80 db below the level of the carrier fundamental.

3.13.1 Radiated and Conducted Noise Interference. To minimize all radiated and conducted noise interference in the frequency range 25 MHz to 1,000 MHz which may be radiated directly from the equipment enclosure or conducted outside the enclosure on external wiring, adequate shielding and filtering shall be provided on all leads entering or leaving radio frequency compartments.

3.13.2 Undesired Radiation Level. When measured at a distance of 4' from the transmitter enclosure, radiation levels shall not exceed the following maxima:

All frequencies between 25 and 1,000 MHz	10 microvolts
Carrier frequency with 90% ± 5% modulation	10,000 microvolts

3.14 Crystal Oscillator. The transmitter shall incorporate a crystal oscillator possessing inherent stability characteristics sufficient to achieve a frequency accuracy of ±.001% at the operating frequency of the transmitter. The crystal shall be installed in or through the front panel of the transmitter; installation or removal of a crystal for a different channel frequency shall not require removal of the transmitter from the rack either for access to the crystal or retuning of internal transmitter circuitry.

3.14.1 Crystal Unit. The crystal oscillator shall function with a standard crystal of the desired frequency accuracy and stability in accordance with MIL-C-3098. With the crystal properly installed in the front panel of the transmitter, the crystal shall not extend beyond other fixed components (such as dials, knobs, switches and connectors) also extending from the front panel.

3.14.2 Crystal Oven. The basic design of the transmitter shall not contain a crystal oven unless the contractor demonstrates that the required degree of frequency accuracy and stability cannot be achieved in any other manner. Operation of the crystal oven shall not be noticeable or apparent in any internal circuit of the transmitter and shall not be audible in the audio output of the transmitter. In the event that a crystal oven should be approved by the Contracting Officer, an amber indicator light shall be mounted on the front panel to indicate operation of the oven heater. The crystal oven (if approved) shall be provided in accordance with the following requirements:

Crystal Oven Socket	For HC-6/U Holder
Operating Temperature	Controlled 67°±5°C
Heater Power	24 V DC, 0.25 amperes or less
Crystal Oven Base	Standard Octal

3.14.3 External Oscillator Input. The transmitter shall have a provision for use of an external precision oscillator (not to be furnished with this equipment) for frequency control of the transmitter in lieu of a crystal. The external radio frequency input required for normal operation shall not exceed 0.15 volts RMS into a 50 ohm ± 2 ohm impedance. A type BNC connector shall be provided for the external oscillator input.

3.14.4 Maximum Allowable Frequency Deviation. Under all combinations of normal operating conditions specified in 3.4 including those combinations where the net effects are additive, the total deviation under humidity, temperature, loading, modulation, and power fluctuations

shall not exceed ± .001% of the designated carrier frequency. (See 4.5 and Figure 1)

3.15 Exciter Power Output. The exciter portion of the transmitter shall deliver a minimum carrier power output of not less than 10 watts to a 50 ohm resistor load throughout the frequency range of 116 to 150 MHz and 225 to 399.95 MHz. At this carrier power level and with a modulation level of 90% ± 5%, the exciter shall be capable of normal operation into reactive loads producing voltage standing wave ratios (VSWR) of not greater than 3 to 1. (See 4.6)

3.15.1 Amplifier Power Output. When driven by the transmitter exciter, the power amplifier shall deliver a minimum carrier power output of 50 watts into a 50 ohm resistive load throughout the frequency range of 116 to 150 MHz and 225 to 399.95 MHz. With the signal modulated at a level of 90% ± 5% and with a carrier output of not less than 50 watts, the amplifier shall be capable of operating into a reactive load producing voltage standing wave ratios (VSWR) of not greater than 3 to 1. (See 4.6.1)

3.16 Modulation. Amplitude modulation of the transmitter at maximum rated power shall be achieved to a level of 90% ± 5% from an audio input signal to the speech amplifier of -15 dbm to +10 dbm. (See 4.7)

3.16.1 Optional Module for Input Levels Below -15 dbm. An optional module, not required for normal applications, shall be designed for use of audio input levels down to -35dbm. The optional module shall be of such size and shape that it can be installed internally within the equipment with minimum tools and technical skills. When so installed, this module shall enable an audio input signal at a level of -35 dbm to modulate the transmitter 90% (± 5%).

3.17 Audio Frequency Response of the Transmitter. Throughout the audio range of 300 to 6,000 Hz, the modulation amplitude shall not vary more than +1 or -2 db from the modulation amplitude at 1,000 Hz. (See 4.7)

3.17.1 Audio Response above 6,000 Hz. Above 6,000 Hz the modulation amplitude shall decrease as the frequency increases and shall be down at least 10 db at 10,000 Hz. (See 4.7)

3.17.2 Audio Response Below 300 Hz. Below 300 Hz the modulation amplitude shall decrease as the frequency decreases and shall be down at least 10 db at 100 Hz. (See 4.7)

3.17.3 Audio Compression and Limiting Circuits. The transmitter shall contain audio compression and limiting circuits designed to prevent over-modulation of the carrier under all conditions and to retain a high modulation level of the transmitter (85 to 90% ± 5%) under variable audio input levels from -15 dbm to + 10 dbm. (See 4.7)

3.18 Transmitter Carrier Hum and Noise. With the transmitter operating at a carrier power output of 50 watts modulated 90% ± 5%, the total hum distortion shall be not less than 50 db below a 1,000 Hz test tone output level. Separate measurements shall be made with primary power input frequencies of 50,60, and 400 Hz. Test frequencies for each of the specified AC power frequencies are prescribed in Section 4 of this specification.

3.19 Radio Frequency Intermodulation (UHF) (Carrier on Condition). The amplitude of each radio frequency intermodulation product shall be at least 30 db below the amplitude of an interfering signal fed into the transmitter output connector at 20 db below the transmitter output level and spaced ±1 MHz from the transmitter output frequency. Measurements shall be made at 50 watt (transmitter) and 10 watt (exciter) levels. (See 4.8 through 4.8.3 and Figure 3)

3.19.1 Radio Frequency Intermodulation (VHF) (Carrier on Condition). The amplitude of each radio frequency intermodulation product shall be at least 35 db below the amplitude of an interfering signal fed into the transmitter output connector at 20 db below the transmitter output level and spaced ±500 KHz from the VHF transmitter output frequency. Measurements shall be made at 50 watt (transmitter) and 10 watt (exciter) levels.

3.19.2 Radio Frequency Intermodulation (UHF)(Carrier off Conditions). The amplitude of each radio frequency intermodulation product shall be at least 30 db below the amplitude of each of two interfering signals fed simultaneously into the transmitter output connector and spaced ±500 KHz from the normal transmitter output frequency, but with the transmitter in a "carrier off" condition.

3.19.3 Radio Frequency Intermodulation (VHF) (Carrier off Condition). The amplitude of each radio frequency intermodulation product shall be at least 35 db below the amplitude of each of two interfering signals fed simultaneously into the transmitter output connector and spaced ±250 KHz from the normal transmitter output frequency, but with the VHF transmitter in a "carrier off" condition.

3.20 Transmiter Keying. Semiconductor switching devices shall be used to activate the keying circuits of the exciter. The external keying circuit shall operate through the audio input lines and provide a DC simplex ground circuit which will activate the transmitter switching device by externally grounding the center tap of an audio line transformer. Local keying of the transmitter shall be achieved by locally grounding the center tap of the audio input transformer at the transmitter. The keying potential furnished by the transmitter to the keying line, to the amplifier keying circuit and to the external antenna relay (not a part of this equipment) shall be +24 volts DC. The keying time shall not exceed 35 milliseconds.

3.20.1 Loop Resistance of Keying Circuit. Reliable and positive transmitter keying shall be possible with an external loop resistance of 3,000 ohms.

3.20.2 Optional Keying Module. An optional module shall be designed to provide further keying flexibility, when the standard keying circuit is not adequate for the special environment confronted by the transmitter. The optional module, which may be installed at the discretion of the user, shall cause the transmitter to be keyed reliably by external push-to-talk or keying circuits employing 50 volts DC or 100 volts DC with loop currents of 60 milliamperes or 20 milliamperes, or by a 300-3,000 Hertz tone at a level of -10 dbm to 0 dbm.

a. When the transmitter is being keyed in the 20 or 60 millampere push-to-talk mode, the loop input impedance shall be 150 ohms or less.

b. When the transmitter is being keyed in the 50 or 100 volt push-to-talk mode, the input impedance shall be not less than 47,000 ohms.

c. When the transmitter is being keyed in the "tone" (300-3,000 Hz) push-to-talk mode, the input impedance shall be a nominal 600 ohms.

d. Input loops shall be electrically isolated from ground (balanced mode).

3.21 Audio Input Circuit. The 600 audio input to the transmitter shall be connected directly to an ungrounded transformer primary consisting of 2 separate primary windings which shall be connected in series by an external wire jumper on the input transformer terminals. The series connected primary shall be connected to 2 terminals on the terminal strip provided for external connections.

3.21.1 Protective Devices on Audio Input Circuits. The audio input circuit shall withstand without permanent damage, input pulses applied to each terminal pair and from terminals to chassis of ±1,000 volts peak, with rise time not over 10 microseconds, duration of not over 50 microseconds, and decay time of not less than 600 microseconds measured between 10% and 90% of peak amplitude. After 100 pulses of each polarity applied between input terminals and afterwards between terminals and chassis at intervals of not over 1 second, any resulting change in gain shall not affect the modulation level of the transmitter more ±2%.

3.22 Microphone Input. The front panel of the transmitter shall contain a suitable jack for a single button carbon microphone with Push-to Talk switch contained in the microphone and a suitable connector for a dynamic microphone, M109 or equivalent also equipped with Push-to-Talk switch on the microphone.

3.23 Modulation Gain Control. A modulation gain control shall be mounted in a location which is readily accessible for adjustment. The gain control shall be a continuously adjustable composition or wire wound resistor type with a logarithmic taper.

3.24 Switches. The front panel of the transmitter shall possess 3 basic toggle switches as follows: (1) On-off switch, (2) Control switch (local/remote), (3) Two-position switch labelled "Push-to-Talk" (normal) and "Carrier Test."

3.24.1 Amplifier Switches. The power amplifier shall be equipped with a power on-off switch located on the front panel of the amplifier assembly. The power amplifier power switch shall be independent from the power switch on the exciter assembly.

3.25 Selection of Semiconductor Devices. All semiconductor devices shall be environmentally qualified production articles in accordance with MIL-S-19500 which have been selected for their performance and reliability. Germanium semiconductor devices shall not be incorporated in the transmitter design.

3.25.1 Substitution of Semiconductor Devices. Substitution of semiconductor devices (semiconductors not authorized by MIL-S-19500) shall not be authorized unless specifically requested by the contractor with fully explained justification and specifically approved in writing by the Contracting Officer after a thorough engineering evaluation.

3.25.2 Mounting of Semiconductors. All semiconductors with wire leads shall be soldered into the circuit. All other semiconductors shall be mounted in accordance with the recommendations of their manufacturers.

3.26 Paint. The transmitter shall be finished in a semi-gloss gray color according to FED-STD-595, color 26152. Necessary markings on this surface shall be accomplished in a compatible semi-gloss white.

4. SAMPLING, INSPECTION, AND TEST PROCEDURES REQUIRED FOR QUALITY ASSURANCE

4.1 General. The contractor shall be responsible for the performance of all inspection and testing requirements as specified herein. All contractor prepared test procedures shall be approved by the Contracting Officer prior to commencement of testing. Except as otherwise specified, the contractor may utilize his own or any other inspection facilities and services acceptable to the Government. Inspection records of the examination and tests shall be kept complete and available to the Government as specified in the contract. The Government reserves the right to perform any or all of the inspections set forth where such inspections are deemed necessary by the Government to assure that supplies and services conform to the prescribed requirements.

4.2 Classification of Tests. Prescribed inspections and the tests of the equipment shall be classified as qualification tests and acceptance tests.

4.3 Qualification Tests. Qualification tests shall be performed by the contractor on the first 2 complete equipments produced under this specification. To minimize the elapsed time for performance of the tests and the development of test data, the Air Force may desire to perform operational suitability tests at the same time that the contractor is performing enviromental tests.

4.3.1 Environmental Tests. Environmental tests shall be performed in accordance with MIL-STD-810 unless otherwise specified herein.

4.3.1.1 Low Pressure. Components and assemblies shall be subjected to test method 500, procedure I.

4.3.1.2 High Temperature. Components and assemblies shall be subjected to test method 501, procedure I.

4.3.1.3 Low Temperature. Components and assemblies shall be subjected to test method 502, procedure I.

4.3.1.4 Humidity. Components and assemblies shall be subjected to test method 507, procedure I.

4.3.1.5 Vibration. Components and assemblies shall be subjected to test method 514, procedure I. The test shall be for equipment class 5, using test curve A of Figure 514-5.

4.3.1.6 Shock. Components and assemblies shall be subjected to test method 516, procedures I, II, and VI.

4.3.2. Reliability. The contractor shall establish a reliability assurance program that is planned, intergrated and developed in conjunction with other planning functions. The program shall be based upon the specified requirements, the complexity of design, the quantity under procurement, and the manufacturing techniques required. The program shall assure adequate reliability consideration throughout the respective design, development and production as necessary to meet the contractual reliability requirements.

4.3.2.1 Reliability Program Plan. The contractor shall submit a detailed Reliability Program Plan in accordance with MIL STD 785 as a separate and complete entity within the total system project delineation. The program plan shall be submitted no later than 30 days after award of contract. Submission of the proposed detailed program plan concurrent with the contractor's technical proposal is prescribed in 3.6.1 of this specification.

4.3.2.2 Basis of Compliance. The reliability program plan, as approved by the procuring activity and incorporated into the contract, becomes the basis for contractual compliance.

4.3.2.3 Reliability Program. A minimum reliability program applicable to this specification shall consist of (but not be limited to) program elements contained in MIL-STD-785 as follows:

a. Reliability Organization (MIL-STD-785, 5.1.1)

b. Management and Control (MIL-STD-785, 5.1.2)

c. Program Review (MIL-STD-785, 5.1.3)

d. Critical Items (MIL-STD-785, 5.1.8)

e. Apportionment and Mathematical Models (MIL-STD-785, 5.1.9)

f. Reliability Prediction (MIL-STD-785, 5.1.9.1)

g. Design Reviews (MIL-STD-785, 5.1.10)

h. Supplier and Subcontractor Reliability Programs (MIL-STD-785, 5.1.11)

i. Human Engineering (MIL-STD-785, 5.1.13)

j. Safety Engineering (MIL-STD-785, 5.1.15)

k. Maintainability (MIL-STD-785, 5.1.16)

l. Failure Data Collection, Analysis and Corrective Action (MIL-STD-785, 5.1.19)

m. Reliability Demonstration (MIL-STD-785, 5.1.20 and Section 4.3.2.4. below)

4.3.2.4 Reliability Demonstration. The contractor is required to submit a statistical test plan, to be used in the demonstration of the required reliability of the equipment, within thirty (30) days after the date of the contract. The test plan plus details of its implementation shall be submitted as part of the program plan.

4.3.2.5 General Demonstration Test Provisions. The provisions of MIL-STD-781 apply except where they are in conflict with provisions given to this specification, whereas this specification takes precedence.

4.3.2.6 Specific Provisions.

(a) MTBF - the specified Mean Time Between Failures (θ_o) is stated in Section 3 as 10,000 hours.

(b) Test Level - Test Level A-1, as defined in Section 4.1 of MIL-STD-781 shall apply.

(c) Definition of Failure - The contractor must submit for approval details of operational criteria and specific definitions of failure for the equipments under test.

(d) Sample Size - Three (3) operational transmitters shall be available at the contractor's plant for the purpose of reliability demonstration tests.

(e) Preproduction Test Plan - Test Plan XXV or MIL-STD-781 shall be used, with a descrimination ratio of 3.0 and alpha and beta risk of .30. The contractor has the option of submitting within Thirty (30) days an alternate statistical plan for approval. Any alternate plan would be based on the specific provisions in (a), (b), (c), and (d) above plus the constraint of a maximum testing period of 60 days calendar time.

(f) Production Qualification Test Plan. - Test Plan C-6 of Table 2D-1(c) MIL HDBK-H 108 shall be used, with a discrimination ratio of 3.0 and an alpha and beta risk of .10. The sample shall be made from that first months production.

(g) Production Sampling Test Plan - Test Plan C-3 of Table 2D-1(e), MIL HDBK-H-108 with a discrimination ration of 5.0 and an alpha and beta ratio of .10 for acceptance of each months production.

4.3.3 Maintainability Demonstration. A maintainability demonstration shall be performed by the contractor to show compliance with the quantitative requirement of Section 3.8 for corrective maintenance. In conjunction with this requirement, the following portions of MIL-STD-471 apply.

4.3.3.1 Demonstration Plan. The contractor shall prepare a demonstration plan for approval by the contracting agency in accordance with 4.2 of MIL-STD-471.

4.3.3.2 Maintenance Task Selection. The contractor shall demonstrate compliance of the repair time specified in 3.8 through the fault simulation method. This method shall be performed by introduction of faulty parts, deliberate misalignments, etc. Simulated faults shall be generated for each anticipated failure mode of each module. The general technique of task selection as discussed in Appendix A of MIL-STD-471 for corrective maintenance tasks only shall apply. Since both the design and the maintenance concept are based on a modular construction of the transmitter, then the maintenance task selection can be restricted to the characteristics of each module.

4.3.3.3 Sample Size. A minimum of 30 selected maintenance tasks shall be used for the maintainability demonstration.

4.3.3.4 Maintenance Task Performance. In accordance with 4.3.2 of MIL-STD-471.

4.3.3.5 Accept/Reject Criteria. Upon completion of all maintenance tasks, an accept decision shall be made if the 90th percentile point of the resultant distribution of observed maintenance times is equal to or less than 15 minutes for restoration of service and 180 minutes for module repair.

4.3.3.6 Maintainability Demonstration Report. In accordance with 4.5 of MIL-STD-471.

4.3.4 Performance Tests. The transmitter shall be subjected to a broad spectrum of performance tests necessary to confirm that the basic design and the assembled equipment in fact have met the performance requirements of this specification. The performance tests shall include, but may not be limited to, the following operational parameters:

a. Carrier power output

b. Carrier modulation level

c. Tuning range of equipment

d. Repeatability of tuning operation

e. Audio response

f. Audio distortion

g. Carrier noise

h. Intermodulation distortion

i. Parasitic and spurious oscillations

j. Conducted and radiated radio frequency energy

k. Transient protection

l. Module interchangeability

m. Variable frequency AC and DC power supply performance

4.3.5 Acceptance Tests. Prior to delivery of each completed transmitter assembly, the contractor shall perform a thorough physical electrical and mechanical examination of the equipment to determine that all components and assemblies are in complete compliance with the requirements of this specification. In addition to the specific performance tests which have been accomplished and performed on the various modules, subassemblies, minor assemblies and major assemblies during the production phase, the contractor shall perform the final inspection on each deliverable article to include, but not necessarily be limited to, the following parameters:

a. Exciter power output

b. Percentage of modulation at maximum exciter output

c. Power amplifier power output

d. Percentage of modulation at maximum power amplifier output

e. Audio distortion measured at exciter output

f. Audio distortion measured at power amplifier output

g. Audio frequency response of transmitter modulator

h. Audio input level for maximum modulation

i. Frequency tuning and resettability

j. Hum and noise content of carrier

k. Radio frequency accuracy and stability

l. Power consumption in normal operation

m. Tuning range

n. Metering accurracy

o. Overmodulation protection

4.4 Submission of Test Procedures and Data Forms. The contractor shall submit complete and comprehensive test procedures with appropriate forms for recording the results thereof, for all performance tests required by this specification. The procedures and forms shall cover all tests described within this specification, and all other tests required but not described within this specification. The contractor shall identify all equipment to be utilized in each of the tests. MIL-STD-826 shall be used in the preparation of the test procedures, for equipment class Gp.

4.5 Frequency Accuracy and Stability. Utilizing the exact procedures specified in the Handbook of Maintenance Instructions, the transmitter shall be tuned to frequencies of 116, 124.5, 133, 141.5, 149.95, 225, 250, 275, 300, 325, 350, 375, and 399.95 MHz and loaded to its rated power output. The output frequency then shall be measured (at each operating frequency) with a frequency counter of established accuracy. The frequency shall not deviate more than ±.001% from the indicated operating frequency. The transmitter shall be detuned and then returned to each of the indicated frequencies for a second successive cycle and again shall be measured within ±.001% of the specified frequency. Under all combinations of load, modulation, temperature, and humidity conditions, the frequency shall remain within ±.001% of the desired frequency. (See 3.14.4)

4.6 Exciter Power Output. The exciter shall be coupled to a 50 ohm resistive load and shall deliver not less than 10 watts of carrier power on the frequencies specified in 4.5. The same output levels shall be obtained when operating into a reactive load resulting in a voltage standing wave ratio of 3 to 1 in the exciter output circuit. (See 3.15)

4.6.1 Exciter Protective Circuits Activated by High VSWR - The exciter shall be coupled to a load circuit whichmay be adjusted for either capacitive or inductive loads over an impedance range which will produce VSWR greater than 3:1 in the output transmission line to demonstrate effective operation of the protective circuits. The circuits shall protect the output stage from damage when confronted by an open antenna circuit, a shorted antenna circuit, and reactive loads producing a VSWR of 5:1. (See 3.10.1)

4.6.2 Transmitter Power Output. The transmitter shall be coupled to a 50 ohm resistive load and shall deliver not less than 50 watts of carrier power on each of the frequences specified in 4.5. The same power output levels shall be obtained when operating into a reactive load resulting in a voltage standing wave ratio of 3 to 1 in the antenna output circuit. (See 3.15.1)

4.7 Audio Level Required for 90% Modulation. With the transmitter adjusted to an operating frequency of 300 MHz and delivering a measured power output of at least 50 watts into a 50 ohm load, an audio signal generator shall be applied to the audio input of the transmitter to

determine audio signal levels required for 90% modulation of the carrier. An audio frequency of 1,000 Hz at a level of -15 dbm shall be applied to the speech amplifier input and a 90% ± 5% modulation level achieved by adjustment of the transmitter modulation control. With audio frequencies successively applied to a level of -15 dbm at each 300 Hz from 300 to 6,000 Hz, the modulator shall deliver sufficient audio power to produce a 90% ± 5% amplitude modulated envelope without any adjustment of the modulation level of control.

The input audio level of 1,000 Hz shall be advanced to +10 dbm and the modulation envelope shall not exceed 90% ± 5% modulation level. Over-modulation of the carrier envelope shall not be acceptable under any audio signal input condition or adjustment between -15 dbm and +10 dbm.

Adjust the transmitter for 90% modulation ±5% with an audio input of 1,000 Hz at 0 dbm. Reduce the audio input to -15 dbm and again measure the carrier envelope. The modulation level shall not decrease below a level of 80% ± 5%. (See 3.16 and 3.17)

4.8 Radio Frequency Intermodulation. Intermodulation tests shall be accomplished on both VHF and UHF using two transmitters of the same type. Care shall be exercised to prevent spurious radiations from the interconnecting transmission lines or other equipment from degrading the accuracy of the test measurements. To achieve the 20 db attenuation prescribed in the level of the interfering signal, a suitable length of lossy radio frequency transmission line shall be employed to provide a cumulative 20 db loss between the second transmitter and the transmitter under test. The level of the interfering signal shall be measured with a 50 ohm resistive load substituted for the transmitter. The interfering signal shall be fed to the transmitter output connector in a manner which does not disturb the normal impedance relationship of the transmitter output circuit and dummy antenna load. (See 3.19 through 3.19.3 and Figure 3)

4.8.1 Interfering Signal Source. Each interfering signal shall be generated by a transmitter of the same type as the transmitter under test.

4.8.2 Intermodulation Measurement. The device for measuring intermodulation product amplitude shall be so designed and so isolated from the transmitter output that distortion and intermodulation within the device do not affect the intermodulation measurements.

4.8.3 Exciter Intermodulation Tests. Each intermodulation test specified for the complete transmitter shall be repeated utilizing the exciter only. The interfering transmitters also shall be reduced to their exciter portions to achieve intermodulation measurements among identical signal sources on both VHF and UHF.

4.9 Transmitter Hum Distortion. Adjust the transmitter for rated output on 399.95 MHz. Modulate the carrier 90% (±5%) with a -15dbm audio signal at 1,000 Hertz. When operating from 60 Hertz power, use a wave analyzer to measure the amplitude of any audio signals appearing at 820, 880, 1060, 1120, and 1180 Hertz on the demodulated carrier. Determine the sum of the squares, and develop the square root of the sum of the squares. Calculate the attenuation in decibels relative to the 1000 Hertz level.

Repeat the above operation when using 50 Hertz power. Measure the amplitude of audio signals at 850, 900, 1050, 1100, and 1150 Hertz on the demodulated carrier. Using the square root of the sum of the squares, calculate the attenuation in decibels relative to the 1000 Hertz level.

Repeat the above operation when using 400 Hertz power. Measure the amplitude of audio signals at 200, 600, 1400, 1800 and 2200 Hertz on the demodulated carrier. Using the square root of the sum of the squares, calculate the attenuation in decibels relative to the 1000 Hertz level.

Adjust the modulation level at 30% (±5%) and repeat the measurements using 50, 60 and 400 Hertz primary power.

With the transmitter operating at rated power output on 149.95 MHz, repeat all of the above measurements at 30% and 90% modulation levels, with primary power frequencies of 50, 60, and 400 Hertz. (See 3.18 and Figure 4).

5. PREPARATION FOR DELIVERY

5.1 General. Preservation, packaging, and marking shall be in accordance with MIL-STD-129, and as specified in the contract.

5.2 Individual Packing. Each unit with its accessories shall be packed and marked so that it can be identified and reshipped individually without repacking.

6. NOTES

6.1 Intended Use. The single channel VHF/UHF transmitter described in this specification is intended for worldwide use in the air traffic control environment. Typically it may be installed at remotely controlled transmitter sites, collocated VHF/UHF transmitter/receiver sites, or locally within the equipment areas of radar approach control (RAPCON) facilities or airport control towers. The transmitter also may be installed in ground controlled approach (GCA) and mobile RAPCON facilities.

At remote locations such as radar early warning sites, it may be co-located with VHF/UHF receivers and it may be required to use the same antenna as the receivers, with suitable antenna switching relays or multi-couplers (which are not included in this specification). The transmitter normally will be installed in 19" racks or cabinets in multiple quantities commensurate with the number of air traffic control communications channels authorized for use at the individual air traffic control station or facility. The exciter portion of the transmitter may be employed in GCA, mobile RAPCON or locally within control tower facilities where space is premium and 10 watts of transmitter power is accepted as an adequate power level for normal operations. The small size of the transmitter exciter and its reliability in service may in some instances lead to its multiple installation in lieu of previously programmed multi-channel facilities.

6.2 Concept of Design. The intent of this specification is to produce a reliable, transistorized VHF/UHF communications transmitter exciter which may be expected to operate in excess of 1 year in a typical air traffic control environment without failure of parts or performance and a 50 watt linear amplifier incorporating the same concept of equipment reliability. To achieve this level of reliability, the parts count must be held to a minimum figure consistent with good design and all components must be derated for electrical and thermal stresses to avoid premature failures in service. Protective circuitry designed to isolate the operating semiconductor devices and their associated components from destructive transients also is expected to contribute to the long life and reliability of the transmitter. The transmitter exciter also will allow the use of a battery powered (24 volt) DC bus which may be floated across the power supply; the combination of transmitter reliability and the availability of the battery powered DC bus is expected to provide a transmitting system with all of the advantages and characteristics of no-break power. The versatility of the transmitter is further enhanced by its compatibility with AC power frequencies ranging from 47 Hz to 420 Hz with voltage stability in the order of ±10% of the nominal voltages. Such flexibility will enable the transmitter to utilize relatively unstable and unreliable power sources which normally could not be considered for use in the air traffic control service. The availability of the transmitter exciter is further enhanced by the automatic switching of the antenna from the 50 watt linear amplifier to the output of the 10 watt exciter in case of AC power failure or failure of the 50 watt amplifier. Any design concept which is not consistant with this goal of reliability and availability for service cannot be considered compatible with the intent of this specification and will be considered as not responsive to this specification.

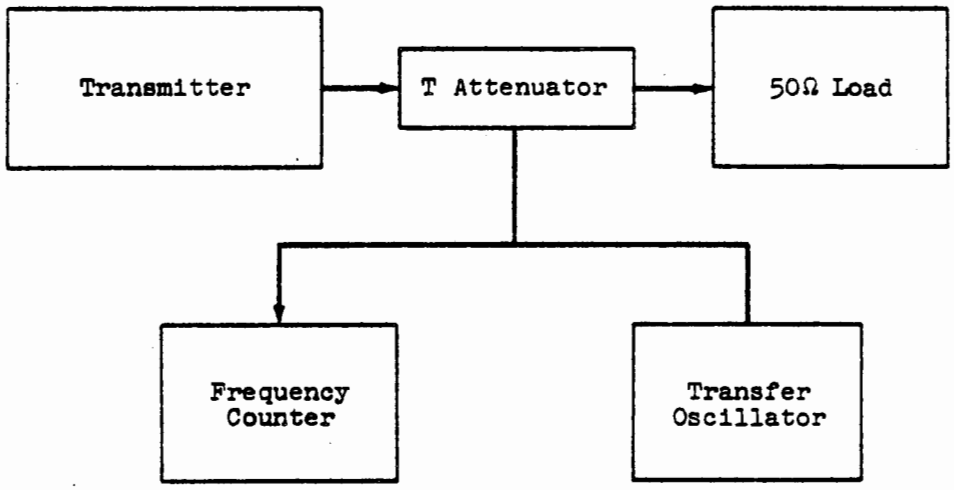

FIGURE 1

FREQUENCY ACCURACY/STABILITY TESTS

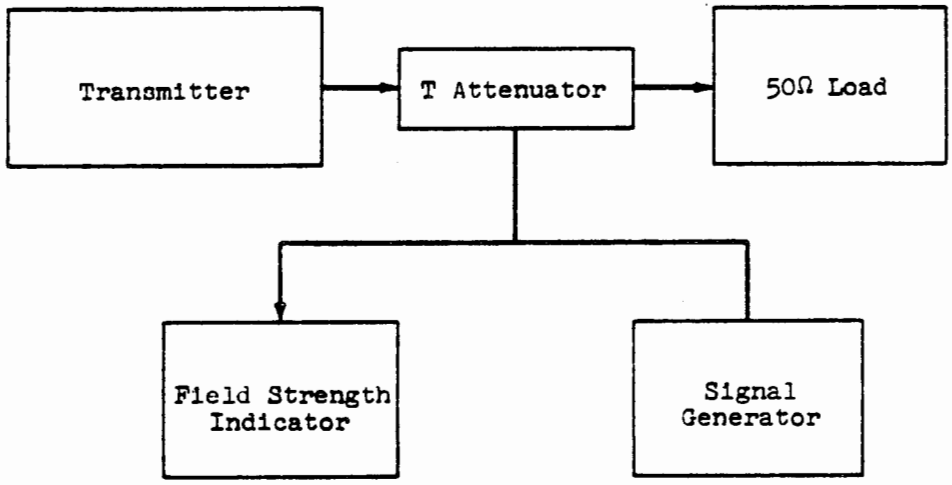

FIGURE 2

HARMONIC/DISTORTION TESTS

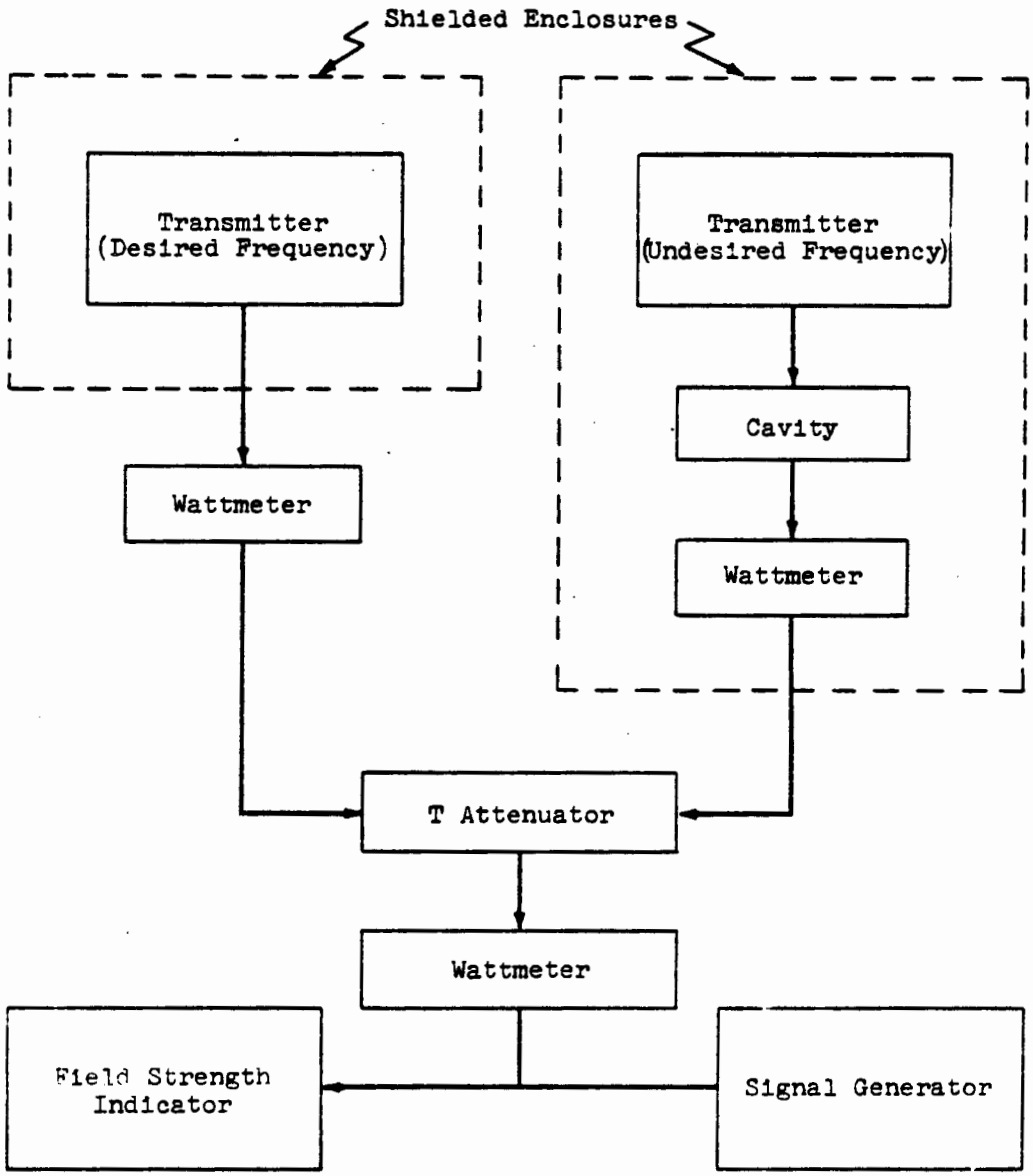

FIGURE 3

INTERMODULATION TEST

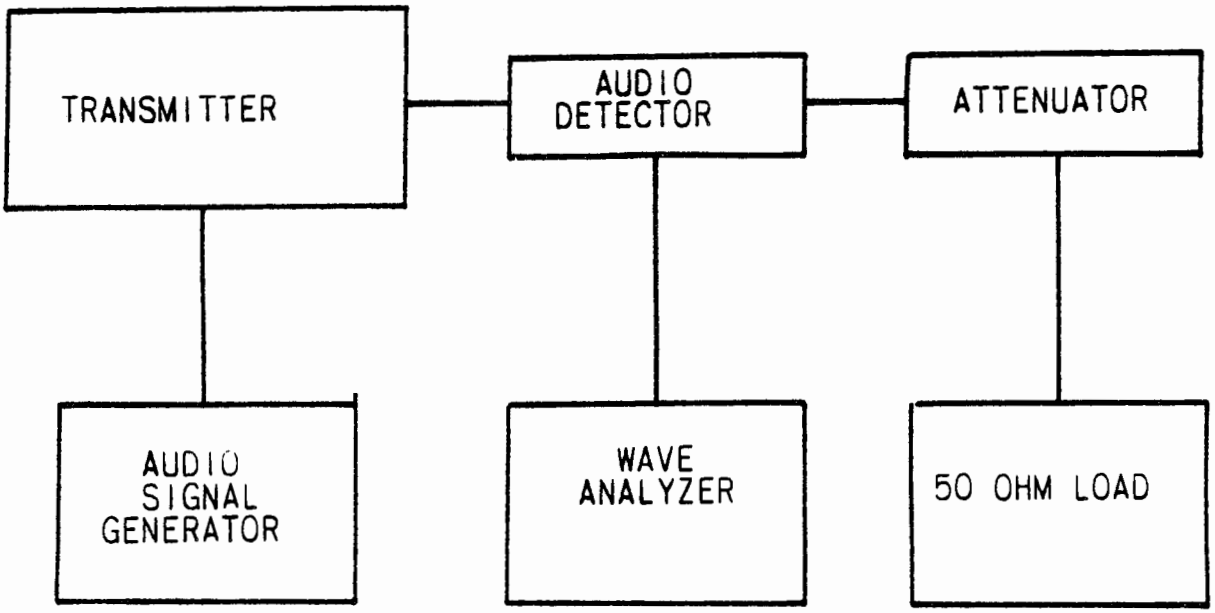

FIGURE 4

TRANSMITTER HUM DISTORTION

APPENDIX B

AIR TRAFFIC CONTROL VHF AND UHF FREQUENCIES

Appendix B contains a listing of the VHF and UHF frequencies which were used in the computer model developed by ARINC Research. The VHF frequencies were defined by referring to report number FAA-RD-76-13, System Design Study for VHF Universal Data Link and DABS Combinations. The UHF frequencies were indicated by a computer printout obtained from the Spectrum Engineering Division (AES-500) of the FAA.

TABLE B-1

ASSIGNED VHF AIR TRAFFIC CONTROL FREQUENCIES

ATC Frequencies		Number Available	
Band MHz	Use	50 kHz Spacing	25 kHz Spacing
118.0-121.4	Air Traffic Control	69	137
121.5	Emergency	1*	1*
123.6-128.8	Air Traffic Control	105	209
132.025-135.975	Air Traffic Control	79	159
Total		254	506

*100 kHz spacing for the Emergency Channel.

UHF ASSIGNMENT COUNT
APRIL 1982

FREQUENCY (MEGAHERTZ)	ASSIGNMENT COUNT		FREQUENCY (MEGAHERTZ)	ASSIGNMENT COUNT		FREQUENCY (MEGAHERTZ)	ASSIGNMENT COUNT		FREQUENCY (MEGAHERTZ)	ASSIGNMENT COUNT	
			00249.9000	1/	1	00268.7000	4/	7	00282.1000	1/	0
00225.1000	3/	1	00251.1000	14/	0	00269.0000	37/	0	00282.2000	10/	0
00225.7000	1/	3	00252.1000	1/	19	00269.1000	21/	2	00282.3000	17/	0
00225.8000	1/	3	00252.7000	1/	0	00269.2000	32/	0	00282.8000	1/	30
00226.3000	6/	11	00252.9000	7/	8	00269.3000	26/	1	00283.6000	7/	0
00226.4000	4/	9	00253.5000	5/	14	00269.4000	30/	0	00284.0000	10/	12
00226.8000	4/	2	00254.3000	24/	0	00269.5000	28/	0	00284.6000	30/	1
00226.9000	1/	5	00255.1000	1/	1	00269.6000	27/	3	00284.7000	22/	0
00227.8000	2/	2	00255.4000	345/	2	00269.9000	5/	27	00285.2000	2/	2
00228.3000	1/	1	00255.6000	6/	15	00270.0000	1/	4	00285.4000	25/	0
00228.4000	4/	4	00255.7000	1/	12	00270.1000	1/	19	00285.5000	27/	0
00228.5000	1/	5	00255.9000	3/	10	00270.3000	15/	0	00285.6000	22/	0
00228.9000	1/	15	00256.7000	11/	2	00270.6000	1/	8	00286.0000	2/	7
00229.4000	2/	24	00256.8000	2/	0	00270.8000	3/	14	00286.5000	1/	6
00229.5000	1/	10	00256.9000	11/	2	00270.9000	1/	0	00286.6000	5/	4
00231.1000	4/	1	00257.0000	1/	20	00271.2000	1/	6	00287.1000	5/	4
00233.2000	4/	8	00257.1000	2/	1	00271.3000	11/	14	00287.9000	12/	1
00233.5000	2/	3	00257.2000	8/	3	00271.4000	1/	10	00288.1000	15/	1
00233.7000	1/	12	00257.3000	1/	2	00272.7000	16/	1	00288.2000	1/	3
00233.8000	1/	13	00257.6000	22/	1	00273.5000	1/	18	00288.3000	8/	0
00234.2000	1/	0	00257.7000	15/	0	00273.6000	16/	0	00289.1000	2/	4
00235.1000	2/	2	00257.7060	1/	0	00274.6000	1/	9	00289.2000	1/	1
00236.5000	4/	2	00257.8000	173/	5	00275.2000	2/	30	00289.4000	4/	28
00236.6000	8/	46	00257.9000	12/	0	00275.4000	1/	17	00289.6000	7/	11
00236.7000	3/	0	00258.1000	1/	2	00275.8000	16/	66	00290.2000	25/	0
00236.8000	2/	2	00258.3000	7/	5	00276.0000	2/	18	00290.3000	18/	0
00237.3000	1/	5	00259.1000	10/	12	00276.3000	3/	0	00290.4000	17/	1
00237.5000	1/	21	00259.2000	1/	8	00276.4000	1/	13	00290.5000	26/	0
00239.0000	29/	3	00259.3000	9/	10	00277.2000	2/	4	00290.6000	1/	5
00239.0500	1/	0	00259.4000	1/	15	00277.4000	14/	0	00290.7000	2/	1
00239.2000	1/	10	00260.1000	1/	2	00278.1000	1/	2	00290.8000	5/	5
00239.2500	1/	0	00260.6000	4/	26	00278.3000	24/	0	00290.9000	9/	13
00239.3000	21/	0	00260.8000	1/	16	00278.5000	14/	0	00291.0000	3/	7
00239.3500	1/	0	00261.5000	17/	0	00278.8000	2/	6	00291.1000	1/	8
00239.8000	2/	14	00263.0000	22/	0	00279.2000	1/	9	00291.6000	29/	0
00240.9000	1/	1	00263.1000	34/	1	00279.4000	1/	13	00291.7000	28/	0
00241.0000	3/	59	00263.6000	5/	10	00279.5000	6/	0	00292.1000	1/	7
00241.1000	1/	4	00264.2000	1/	15	00279.6000	31/	0	00294.5000	3/	9
00241.2000	1/	8	00264.7000	1/	4	00279.9000	1/	9	00294.7000	4/	8
00242.1000	1/	2	00265.0000	1/	3	00280.1000	3/	8	00294.9000	1/	8
00242.4000	2/	17	00265.1000	1/	4	00280.9000	1/	7	00295.0000	4/	2
00242.7000	3/	6	00265.7000	1/	4	00281.3000	1/	2	00295.1000	1/	2
00243.0000	551/	115	00265.8000	1/	12	00281.4000	27/	0	00295.7000	3/	6
00247.2000	4/	1	00266.8000	2/	10	00281.5000	27/	0	00295.9000	1/	6
00247.6000	1/	0	00267.3000	1/	7	00281.8000	1/	7	00296.0000	2/	1
00248.2000	5/	19	00267.9000	10/	2	00281.9000	1/	5	00296.7000	28/	0

UHF ASSIGNMENT COUNT
APRIL 1982

FREQUENCY (MEGAHERTZ)	ASSIGNMENT COUNT		FREQUENCY (MEGAHERTZ)	ASSIGNMENT COUNT		FREQUENCY (MEGAHERTZ)	ASSIGNMENT COUNT		FREQUENCY (MEGAHERTZ)	ASSIGNMENT COUNT	
00297.2000	3/	8	00317.7000	29/	1	00335.8000	3/	16	00351.1000	5/	7
00297.4000	4/	4	00317.8000	2/	5				00351.7000	18/	0
00298.0000	1/	2	00318.1000	8/	10	00336.2000	2/	10	00351.8000	23/	0
00298.9000	14/	1	00318.2000	9/	8	00336.4000	2/	24	00351.9000	14/	0
00299.2000	13/	0	00318.8000	3/	10	00336.8000	1/	1	00352.0000	13/	0
00299.6000	2/	9	00319.0000	7/	1	00337.2000	4/	11	00352.4000	1/	15
00300.4000	1/	8	00319.1000	19/	0	00337.4000	2/	10	00352.8000	2/	11
00301.4000	2/	2	00319.2000	24/	0	00337.7000	1/	4	00353.0000	1/	5
00301.5000	7/	8	00319.3000	4/	4	00338.0000	1/	3	00353.5000	15/	0
00302.0000	5/	5	00319.8000	22/	0	00338.1000	1/	5	00353.6000	14/	1
			00319.9000	19/	2	00338.2000	17/	0	00353.7000	16/	0
00303.6000	1/	2	00320.1000	8/	13	00338.3000	24/	0	00353.8000	19/	0
00304.8000	1/	8	00320.4000	2/	7	00338.6000	3/	6	00353.9000	19/	0
00305.1000	1/	4	00320.5000	2/	9	00339.1000	6/	8	00354.0000	19/	0
00305.2000	1/	10	00321.1000	3/	7	00339.3000	4/	5	00354.1000	18/	0
00305.4000	5/	10	00321.2000	1/	17	00339.8000	4/	0	00354.8000	2/	6
00306.2000	20/	0	00321.3000	32/	0	00340.7000	2/	8	00355.1000	1/	6
00306.3000	25/	1	00321.4000	2/	0	00340.9000	3/	8	00357.0000	1/	3
00306.9000	25/	0	00321.8000	1/	8	00341.7000	2/	1	00357.4000	4/	3
00307.0000	19/	0	00322.0000	1/	10	00341.9000	1/	1	00357.6000	17/	0
00307.1000	20/	0	00322.1000	1/	3	00342.5000	2/	19	00358.0000	1/	12
00307.2000	22/	0	00322.3000	18/	0	00343.6000	23/	0	00359.0000	3/	7
00307.3000	11/	0	00322.4000	19/	0	00343.7000	15/	2	00359.2000	1/	2
00307.8000	20/	0	00322.5000	24/	1	00343.8000	19/	1	00359.3000	3/	10
00307.9000	20/	0	00322.7000	2/	3	00343.9000	20/	1	00360.6000	23/	0
00308.4000	3/	7	00322.9000	1/	0	00344.4000	1/	7	00360.7000	18/	0
00308.6000	2/	2	00323.0000	26/	1	00344.6000	6/	49	00360.8000	28/	2
00309.2000	3/	2	00323.1000	14/	1	00344.8000	5/	3	00361.4000	1/	10
00309.6000	1/	1	00323.2000	20/	0	00345.0000	1/	6	00362.3000	13/	0
00309.8000	2/	13	00323.3000	1/	2	00345.2000	3/	10	00362.6000	2/	6
00310.8000	1/	6	00324.1000	4/	4	00345.0000	2/	10	00363.0000	14/	1
00312.0000	5/	1	00324.3000	5/	14	00346.3000	12/	0	00363.1000	19/	1
00312.3000	1/	3	00324.5000	4/	14	00346.4000	11/	0	00363.2000	24/	0
00312.4000	2/	7	00324.8000	1/	2	00346.8000	2/	5	00363.8000	21/	21
00313.2000	3/	6	00325.2000	2/	9	00347.8000	1/	4	00364.0000	1/	6
00314.0000	1/	5	00325.8000	10/	9	00348.0000	1/	12	00364.8000	22/	6
00314.2000	5/	24	00326.2000	4/	8	00348.3000	4/	2	00367.2000	1/	1
00314.8000	2/	11	00326.7000	1/	2	00348.4000	2/	12	00368.7000	1/	2
00315.4000	1/	10	00327.0000	14/	0	00348.6000	100/	0	00369.0000	1/	26
00315.6000	3/	8	00327.1000	24/	1	00348.7000	15/	0	00369.2000	1/	12
00316.1000	17/	0	00327.5000	7/	5	00349.0000	5/	11	00359.9000	20/	1
00316.1500	1/	0	00327.8000	15/	0	00349.1000	1/	5	00370.1000	1/	2
00316.7000	11/	7	00328.4000	2/	11	00349.4000	1/	21	00370.9000	19/	0
00317.4000	15/	0	00335.5000	14/	0	00350.2000	13/	0	00371.1000	1/	8
00317.5000	22/	0	00335.6000	19/	0	00350.3000	16/	0	00371.2000	3/	8
00317.6000	16/	0				00350.9000	3/	7	00371.9000	16/	0

UHF ASSIGNMENT COUNT
APRIL 1982

FREQUENCY (MEGAHERTZ)	ASSIGNMENT COUNT		FREQUENCY (MEGAHERTZ)	ASSIGNMENT COUNT		FREQUENCY (MEGAHERTZ)	ASSIGNMENT COUNT		FREQUENCY (MEGAHERTZ)	ASSIGNMENT COUNT	
00372.0000	12/	0	00390.9000	3/	3						
00372.1000	6/	1	00391.2000	1/	10						
00372.2000	5/	74	00391.9000	2/	10						
00372.8000	2/	8	00392.0000	2/	8						
00372.9000	7/	5	00392.1000	7/	2						
00373.5000	2/	9	00393.0000	9/	5						
00374.8000	1/	5	00393.1000	10/	4						
00375.2000	2/	12	00394.1000	1/	0						
00377.1000	18/	0	00395.0000	5/	5						
00377.2000	5/	1	00395.8000	4/	5						
00378.1000	1/	4	00395.9000	6/	10						
00378.8000	2/	9	00396.0000	5/	7						
00379.1000	19/	0	00396.1000	6/	6						
00379.2000	14/	0	00397.0000	1/	2						
00379.3000	1/	8	00397.2000	7/	6						
00379.7000	1/	14	00397.8940	1/	0						
00379.9000	6/	2	00397.9000	15/	0						
00379.9000	10/	1	00398.2000	6/	6						
00380.0000	1/	0	00398.9000	11/	0						
00380.1000	2/	0									
00380.2000	20/	1									
00380.3000	10/	1									
00380.6000	1/	13									
00380.8000	1/	15									
00381.2000	9/	1									
00381.4000	14/	1									
00381.5000	12/	1									
00381.6000	19/	1									
00382.0000	1/	10									
00382.6000	1/	45									
00383.1000	3/	9									
00384.9000	3/	5									
00385.2000	1/	3									
00385.4000	10/	0									
00385.5000	13/	5									
00385.6000	24/	2									
00385.6500	1/	0									
00387.0000	11/	0									
00387.1000	9/	0									
00388.0000	13/	3									
00388.2000	7/	10									
00388.8000	9/	5									
00388.9000	2/	4									
00389.8000	4/	7									
00389.9000	2/	3									
00390.8000	6/	8									

TOTAL UHF COUNT 04497/03060

APPENDIX C

COMPUTER MODEL LISTING

A computer model was developed to choose sets of VHF and UHF frequencies and to calculate intermodulation products formed by them. This model provided the basis for the quick-look analysis described in the body of the report. The model, developed by ARINC Research, was written in Fortran IV and implemented on a PDP 11/34 computer.

A listing of the program appears in this appendix.

```
FORTRAN IV-PLUS V02-51C          20:15:51     03-DEC-83
DOTHIS.FTN       /TR:BLOCKS/WR

      cccccccccccccccccccccccccccccccccccccccccccccccccccccccccccccccccccccc
      c
      c       IMOD - simulation to determine the impact of intermodulation
      c       on transmitter co-location.  User specifies number of VHF
      c       and UHF transmitters, minimum interfrequency spacing to be
      c       observed, and a 'delta f' which represents the minumum 'safe'
      c       interval around each frequency.  The user-specified IM pro-
      c       ducts are calculated for each pairing of frequencies; these
      c       products are compared with each frequency to see if they
      c       fall within delta f. If they do, then a 'hit' is scored;
      c       the process is repeated for each frequency pair; and then
      c       a new set of random frequencies is generated and the process
      c       starts over.  A printout gives statistics and distribution
      c       of hits.
      c
      c       Logical units: 1 = terminal, 2 = disk (DK1:), 3 = printer
      c
      c       written by Rick Conner
      c                  ARINC Research Corp.
      c                  2551 Riva Road
      c                  Annapolis MD  21401
      c
      c                  11 August 1983
      c
      cccccccccccccccccccccccccccccccccccccccccccccccccccccccccccccccccccccc
      c
0001          real*4 vflist(1000),uflist(1000),freq(50),vhfsep,uhfsep,vor,fm
0002          real*4 deltaf,sumhit,souhit,improd,mean,sigma,skale,rend,fmbw
0003          real*4 pairs,comp
0004          integer*2 dist(0:1000),miter,numvhf,numuhf,totvhf,totuhf,iterct
0005          integer*2 seed1,seed2,start,end,this,that,hits,marks,max,i,fixit
0006          logical*1 clear,home,ans,flagb,flagc,flagd,flage,flagf,stime(8)
0007          logical*1 vflag,fflag,onef,twof
      c
0008          common/seeds/seed1,seed2
0009          common/tester/freq,improd,deltaf,fmbw,hits,end,vflag,fflag
      c
0010          clear=26                                  !ASCII clear screen
0011          home=30                                   ! ASCII home cursor
0012          fixit=15
0013          write(1,10)clear,home
0014    10    format(1x,2a1)
0015          write(1,*)'                        INTERMODULATION SIMULATION'
0016          write(1,*)'                        ==========================='
0017          write(1,15)
0018    15    format(/'$Enter number of iterations (30 - 30,000)...')
0019    16    read(1,*)niter
0020          if(niter.gt.29.and.niter.lt.30001)go to 20
0021          write(1,17)
0022    17    format('$Out of range - please try again...')
0023          go to 16
0024    20    write(1,21)
0025    21    format(/'$Enter number of VHF frequencies (up to 22)...')
0026    22    read(1,*)numvhf
0027          if(numvhf.lt.23.and.numvhf.ge.0)go to 25
0028          write(1,23)
0029    23    format('$Your selection is out of range; please try again...')
0030          go to 22
0031    25    write(1,26)
0032    26    format(/'$Enter number of UHF frequencies (up to 22)...')
0033    27    read(1,*)numuhf
0034          if(numuhf.lt.23.and.numuhf.ge.0)go to 30
0035          write(1,23)
0036          go to 27
0037    30    write(1,31)
0038    31    format(/'$Enter min. VHF inter-frequency spacing (MHz): ')
0039          read(1,*)vhfsep
0040          write(1,35)
0041    35    format(/'$Enter min. UHF inter-frequency spacing (MHz): ')
0042          read(1,*)uhfsep
0043          write(1,40)
```

```
0044    40      format(/'$Enter VOR frequency - 112-118 MHz or 0 for none: ')
0045            read(1,*)vor
0046            write(1,45)
0047    45      format(/'$Enter FM frequency - 88-108 MHZ or 0 for none: ')
0048            read(1,*)fm
0049            if(fm.le.0)go to 49
0050            write(1,47)
0051    47      format(/'$Enter FM bandwidth in MHz: ')
0052            read(1,*)fmbw
0053    49      write(1,50)
0054    50      format(/'$Enter delta-f in MHz: ')
0055            read(1,*)deltaf
        c
        c       prompt user for which types of IM products to check for
        c
0056            write(1,55)
0057    55      format(/' For each of the following IM products, answer "Y" if')
0058            write(1,56)
0059    56      format(' you want to check for it...'/)
0060            write(1,57)
0061    57      format('       a) 2f - f'': Y')          ! check this one anyway
0062            write(1,58)
0063    58      format('$      b) 2f + f'': ')
0064            read(1,59)ans
0065            flasb=.false.
0066    59      format(1a1)
0067            if(ans.eq.'Y'.or.ans.eq.'y')flasb=.true.
0068            write(1,60)
0069    60      format('$      c) f - f'': ')
0070            read(1,59)ans
0071            flasc=.false.
0072            if(ans.eq.'Y'.or.ans.eq.'y')flasc=.true.
0073            write(1,61)
0074    61      format('$      d) f + f'': ')
0075            read(1,59)ans
0076            flasd=.false.
0077            if(ans.eq.'Y'.or.ans.eq.'y')flasd=.true.
0078            write(1,62)
0079    62      format('$      e) 2f : ')
0080            read(1,59)ans
0081            flase=.false.
0082            if(ans.eq.'Y'.or.ans.eq.'y')flase=.true.
0083            write(1,63)
0084    63      format('$      f) 3f : ')
0085            read(1,59)ans
0086            flasf=.false.
0087            if(ans.eq.'Y'.or.ans.eq.'y')flasf=.true.
        c
        c       read frequency tables into memory from disk files
        c
0088            open(unit=2,type='old',name='DK1:[100,100]FREQ.VHF    ',
              %       readonly,carriagecontrol='list')    ! open file
0089            totvhf=0                                    ! set VHF counter
0090    100     totvhf=totvhf+1                             ! advance VHF counter
0091            read(2,*,end=110)vflist(totvhf)             ! read a frequency
0092            go to 100                                   ! keep going 'til EOF
0093    110     totvhf=totvhf-1                             ! correct the count
0094            close(unit=2)                               ! close the file
0095            open(unit=2,type='old',name='DK1:[100,100]FREQ.UHF    ',
              %       readonly,carriagecontrol='list')
0096            totuhf=0
0097    112     totuhf=totuhf+1
0098            read(2,*,end=120)uflist(totuhf)
0099            go to 112
0100    120     totuhf=totuhf-1
0101            close(unit=2)
        c
        c
0102    125     iterct=1                                    ! set iteration counter
0103            sumhit=0                                    ! sum of hits
0104            squhit=0                                    ! sum of (hits squared)
0105            call time(stime)                            ! call for system time
0106            decode(8,130,stime)seed1,seed2              ! to seed random gen'r
0107    130     format(i2,4x,i2)                            ! with hour & seconds
        c
        c       start iteration loop here
        c
```

```
0108    200     write(1,201)iterct,niter
0109    201     format(/' Iteration number ',i5,' of ',i5,'...')
0110            hits=0                                  ! reset hit counter
0111            freq(1)=121.5                           ! VHF emergency freq
0112            freq(2)=243.0                           ! UHF emergency freq
0113            start=3
0114            if(vor.eq.0)go to 205                   ! assign a VOR?
0115            freq(start)=vor
0116            start=4
0117    205     if(fm.eq.0)go to 210                    ! assign an FM?
0118            freq(start)=fm
0119            start=start+1
0120    210     end=start-1                             ! temporary set
0121            if(numvhf.lt.1)go to 212                ! any VHFs ?
0122            end=start+numvhf-1                      ! yes, how many?
0123            call pick(vflist,totvhf,freq,start,end,vhfsep) ! get random VHFs
0124    212     if(numuhf.lt.1)go to 220
0125            start=end+1                             ! any UHF?
0126            end=start+numuhf-1                      ! yes, count them
0127    216     call pick(uflist,totuhf,freq,start,end,uhfsep) ! get random UHFs
        c
        c       calculate and test IM products for each frequency pair
        c
0128    220     do 290 this=1,end                       ! subscript for 'f'
0129             vflag=.false.
0130             fflag=.false.
0131             if(freq(this).lt.118.0)vflag=.true.    ! is this a VOR?
0132             if(freq(this).lt.108.0)fflag=.true.    ! is this an FM?
0133             if(.not.flage)go to 225
0134             improd=2*freq(this)                    ! test 2f
0135             call test
0136    225      if(.not.flagf)go to 240
0137             improd=3*freq(this)                    ! test 3f
0138             call test
0139    240      do 280 that=1,end                      ! subscript for 'f''
0140             if(this.eq.that)go to 280              ! don't pair with self
0141             if(freq(that).lt.118.0)vflag=.true.    ! is that a VOR?
0142             if(freq(that).lt.108.0)fflag=.true.    ! is that an FM?
0143             improd=2*freq(this)-freq(that)         ! test 2f - f'
0144             call test
0145             if(.not.flagb)go to 250
0146             improd=2*freq(this)+freq(that)         ! test 2f + f'
0147             call test
0148    250      if(.not.flagc)go to 260
0149             improd=freq(this)-freq(that)           ! test f - f'
0150             call test
0151    260      if(.not.flagd)go to 280
0152             improd=freq(this)+freq(that)           ! test f + f'
0153             call test
0154    280      continue
0155    290     continue
0156            sumhit=sumhit+hits                      ! accumulate hits
0157            rhits=hits                              ! convert to real
0158            squhit=squhit+(rhits**2.)               ! and square of hits
0159            if(hits.gt.max)max=hits                 ! max no. hits
0160            dist(hits)=dist(hits)+1                 ! distribution
0161            iterct=iterct+1                         ! advance iteration cnt
0162            if(iterct.gt.niter)go to 320            ! finished?
0163            write(1,292)hits
0164    292     format(' Accumulated hits: ',i4)
0165            go to 200                               ! next iteration
        c
        c       end of iteration loop
        c
0166    320     write(3,322)
0167    322     format('1',18x,'RANDOM FREQUENCY INTERMODULATION SIMULATION')
0168            write(3,323)
0169    323     format(18x,' ==========================================')
0170            write(3,325)niter,deltaf
0171    325     format(//' NUMBER OF ITERATIONS: ',i5,13x,'DELTA F = ',f10.3,
              %          ' MHz'/)
0172            write(3,327)numvhf,vhfsep
0173    327     format(' RANDOM VHF FREQUENCIES: ',i3,13x,'VHF SPACING = ',
              %          f6.3,' MHz')
0174            write(3,329)numuhf,uhfsep
0175    329     format(' RANDOM UHF FREQUENCIES: ',i3,13x,'UHF SPACING = ',
```

```
          %          f6.3,' MHz')
0176          write(3,331)
0177    331   format(//' VHF EMERGENCY = 121.500 MHz',13x,'UHF EMERGENCY = ',
          %          '243.000 MHz')
0178          write(3,333)vor,fm
0179    333   format(' VOR FREQUENCY = ',f7.3,' MHz',13x,'FM BROADCAST = ',
          %          f8.3,' MHz')
0180          ibw=fmbw*1000
0181          write(3,334)ibw
0182    334   format(' (forced bandwidth 25 kHz)',17x,
          %          '(forced bandwidth +/- ',i3,' kHz)')
0183          write(3,335)
0184    335   format(21x,'(Frequency of zero means not tested for)')
0185          onef=0
0186          twof=1
0187          write(3,337)
0188    337   format(//' INTERMODULATION PRODUCTS TESTED:  2f - f'' ')
0189          if(flasb)write(3,339)
0190    339   format(35x,'2f + f'' ')
0191          if(flasc)write(3,341)
0192    341   format(35x,'f - f'' ')
0193          if(flasd)write(3,343)
0194    343   format(35x,'f + f'' ')
0195          if(flase)write(3,500)
0196    500   format(35x,'2f')
0197          if(flasf)write(3,510)
0198    510   format(35x,'3f')
0199          if(flasb)twof=twof+1
0200          if(flasc)twof=twof+1
0201          if(flasd)twof=twof+1
0202          if(flase)onef=onef+1
0203          if(flasf)onef=onef+1
0204          rend=end
0205          comp=(rend**2.)*(end-1)*twof+onef*rend**2. ! # possible hits
0206          mean=sumhit/niter                          ! average hits/iteration
0207          sigma=(sqhits/niter - (sumhits/niter)**2.)**0.5
                                                         ! standard deviation
0208          write(3,345)
0209    345   format(//1x,80(1h=))
0210          write(3,350)
0211    350   format(/' FREQUENCY CONFLICTS:')
0212          write(3,356)comp
0213    356   format('       NUMBER OF POSSIBLE CONFLICTS: ',f7.0)
0214          write(3,353)mean
0215    353   format('       MEAN CONFLICTS PER ITERATION: ',f6.1)
0216          write(3,354)sigma
0217    354   format('       STANDARD DEVIATION: ',10x,f6.1)
0218          write(3,345)
0219          write(3,355)
0220    355   format(/' CONFLICT DISTRIBUTION FOLLOWS')
        c
        c     draw distribution
        c
0221          max=max+3                                  ! limit to chart
0222          write(3,360)
0223    360   format('1FREQUENCY CONFLICT DISTRIBUTION - HITS vs. ',
          %          'TIMES (NUMBER OF ITERATIONS)')
0224          write(3,362)numvhf,numuhf,deltaf,niter
0225    362   format(/' (',i2,' VHF, ',i2,' UHF, delta f = ',f6.3,', ',i5,
          %          ' iterations)')
0226          write(3,365)
0227    365   format(//' NUMBER    NUMBER')
0228    370   format(   ' OF HITS   OF TIMES')
0229          write(3,370)
0230          write(3,375)
0231    375   format(1x,80(1h=))
0232          big=0                          ! look for largest DIST(i)
0233          do 378 i=0,max
0234            if(dist(i).gt.big)big=dist(i)
0235    378   continue
0236          skale=1000.
0237          if(big.lt.5000)skale=100.      ! set scales for chart
0238          if(big.lt.500)skale=10.
0239          if(big.lt.50)skale=1
```

```
0240            do 400 i=0,max
0241            marks=dist(i)/skale
0242            if(marks.gt.50)marks=50
0243            if(marks.lt.1)write(3,380)i,dist(i)
0244            if(marks.ge.1)write(3,385)i,dist(i)
0245    380     format(3x,i4,2x,'!',2x,i5,3x,'!')
0246    385     format(3x,i4,2x,'!',2x,i5,3x,'!',<marks>(1h*))
0247    400     continue
0248            write(3,375)
0249            stop
0250            end
```

```
FORTRAN IV-PLUS V02-51C
DOTHIS.FTN      /TR:BLOCKS/WR

PROGRAM SECTIONS

NUMBER   NAME       SIZE                 ATTRIBUTES

  1      $CODE1  005574  1470            RW,I,CON,LCL
  2      $PDATA  000164    58            RW,D,CON,LCL
  3      $IDATA  003572   957            RW,D,CON,LCL
  4      $VARS   023572  5053            RW,D,CON,LCL
  5      $TEMPS  000012     5            RW,D,CON,LCL
  6      SEEDS   000004     2            RW,D,OVR,GBL
  7      TESTER  000332   109            RW,D,OVR,GBL

VARIABLES

 NAME    TYPE  ADDRESS    NAME    TYPE  ADDRESS    NAME    TYPE  ADDRESS    NAME    TYPE  ADDRESS

 ANS     L*1   4-023536   BIG     R*4   4-023566   CLEAR   L*1   4-023534   COMP    R*4   4-017554
 END     I*2   7-000326   FFLAG   L*1   7-000331   FIXIT   I*2   4-023532   FLAGB   L*1   4-023537
 FLAGD   L*1   4-023541   FLAGE   L*1   4-023542   FLAGF   L*1   4-023543   FM      R*4   4-017514
 HITS    I*2   7-000324   HOME    L*1   4-023535   I       I*2   4-023530   IBW     I*2   4-023564
 ITERCT  I*2   4-023514   MARKS   I*2   4-023524   MAX     I*2   4-023526   MEAN    R*4   4-017530
 NITER   I*2   4-023556   NUMUHF  I*2   4-023506   NUMVHF  I*2   4-023504   ONEF    L*1   4-023554
 REND    R*4   4-017544   RHITS   R*4   4-023560   SEED1   I*2   6-000000   SEED2   I*2   6-000002
 SKALE   R*4   4-017540   SQUHIT  R*4   4-017524   START   I*2   4-023516   SUMHIT  R*4   4-017520
 THIS    I*2   4-023520   TOTUHF  I*2   4-023512   TOTVHF  I*2   4-023510   TWOF    L*1   4-023555
 VFLAG   L*1   7-000330   VHFSEP  R*4   4-017500   VOR     R*4   4-017510

 NAME    TYPE  ADDRESS

 DELTAF  R*4   7-000314
 FLAGC   L*1   4-023540
 FMBW    R*4   7-000320
 IMPROD  R*4   7-000310
 MITER   I*2   4-023502
 PAIRS   R*4   4-017550
 SIGMA   R*4   4-017534
 THAT    I*2   4-023522
 UHFSEP  R*4   4-017504


ARRAYS

 NAME    TYPE  ADDRESS        SIZE          DIMENSIONS

 DIST    I*2   4-017560  003722  1001       (0:1000)
 FREQ    R*4   7-000000  000310   100       (50)
 STIME   L*1   4-023544  000010     4       (8)
 UFLIST  R*4   4-007640  007640  2000       (1000)
 VFLIST  R*4   4-000000  007640  2000       (1000)
```

LABELS

LABEL	ADDRESS	LABEL	ADDRESS	LABEL	ADDRESS	LABEL	ADDRESS
10'	3-000000	15'	3-000006	16	1-000200	17'	3-000066
21'	3-000134	22	1-000322	23'	3-000216	25	1-000414
27	1-000442	30	1-000534	31'	3-000370	35'	3-000454
45'	3-000626	47'	3-000712	49	1-001034	50'	3-000752
56'	3-001100	57'	3-001140	58'	3-001166	59'	3-001214
61'	3-001244	62'	3-001270	63'	3-001312	100	1-001714
112	1-002032	120	1-002112	125	**	130'	3-001334
201'	3-001344	205	1-002366	210	1-002430	212	1-002506
220	1-002560	225	1-002716	240	1-002770	250	1-003214
280	1-003360	290	**	292'	3-001412	320	1-003562
323'	3-001524	325'	3-001606	327'	3-001674	329'	3-001766
333'	3-002162	334'	3-002254	335'	3-002354	337'	3-002432

LABEL	ADDRESS				
20	1-000274	341'	3-002530	350'	3-002612
26'	3-000306	354'	3-002770	360'	3-003074
40'	3-000540	365'	3-003306	378	**
55'	3-001006	385'	3-003414	510'	3-002570
60'	3-001220	343'	3-002544	353'	3-002716
110	1-001774	355'	3-003032	362'	3-003212
200	1-002230	370'	3-003334	380'	3-003372
216	**	400	**		
260	1-003276	345'	3-002600		
322'	3-001442	356'	3-002644		
331'	3-002060	375'	3-003362		
339'	3-002512	500'	3-002560		

FUNCTIONS AND SUBROUTINES REFERENCED

CLOS$ OPEN$ PICK TEST TIME

TOTAL SPACE ALLOCATED = 035714 7654

```
FORTRAN IV-PLUS V02-51C          20:17:56     03-DEC-83
DOTHIS.FTN       /TR:BLOCKS/WR

0001             subroutine pick(list,nlist,freq,start,end,sep)
        c
        cccccccccccccccccccccccccccccccccccccccccccccccccccccccccccccccccccccc
        c
        c        PICK - called by IMOD main program - randomly selects frequen-
        c        cies from the indicated band (UHF or VHF), observing the
        c        specified minimum spacing between frequencies.
        c
        c        EXTERNAL ASSIGNMENTS:
        c        ==================================================================
        c        list - array of frequencies (as read from one of the files)
        c        nlist - no. of frequencies in 'list'
        c        freq - array containing set of frequencies to be tested in
        c                this iteration of main program
        c        start - subscript of first frequency to pick
        c        end - subscript of last frequency to pick
        c        sep - minimum frequency separation (MHz)
        c        seed1, seed2 - random number function seeds
        c
        c        INTERNAL ASSIGNMENTS
        c        ==========================================================
        c        temp - array containing available frequencies
        c        nitem - number of frequencies in 'temp'
        c        count - subscript of frequency assigned to 'freq'
        c        point - randomly-selected subscript of 'temp'
        c        tempct - number of frequencies still available after
        c                 pursing 'temp'
        c
        cccccccccccccccccccccccccccccccccccccccccccccccccccccccccccccccccccccc
        c
```

```
0002            real*4 list(1000),temp(1000),freq(50),sep
0003            integer*2 nitem,nlist,count,start,end,point,tempct,i
0004            integer*2 seed1,seed2
        c
0005            common/seeds/seed1,seed2
        c
0006    5       nitem=nlist                         ! copy no. of available freqs.
0007            do 10 i=1,nitem                     ! copy available frequencies
0008                    temp(i)=list(i)
0009    10      continue
0010            count=start                         ! set at first frequency to set
0011    20      point=(ran(seed1,seed2)*(nitem-1))+1 ! random subscript
0012            freq(count)=temp(point)             ! assign random frequency
0013            if(freq(count).eq.0)go to 20        ! no zero frequencies
        c
0014            do 30 i=1,nitem                     ! look for too-close freqencies
0015                    if(abs(temp(i)-freq(count)).lt.sep)temp(i)=0
        c                                           ! make them unavailable
0016    30      continue
0017            tempct=0                            ! count number of freqs. left
0018            do 40 i=1,nitem                     ! in 'temp' after above loop
0019                    if(temp(i).eq.0)go to 40
0020                    tempct=tempct+1             ! shrink 'temp' by dropping
0021                    temp(tempct)=temp(i)        ! unavailable (zeroed) freqs.
0022    40      continue
0023            nitem=tempct                        ! reset available freq count
0024            count=count+1                       ! next 'freq' subscript
0025            if(count.gt.end)return              ! finished assigning freqs?
0026            if(nitem.gt.0)go to 20              ! out of frequencies?
0027    50      write(1,51)
0028    51      format(' WHOOPS!  Frequency list exhausted!')
0029            go to 5
0030            end
```

```
FORTRAN IV-PLUS V02-51C          20:17:56     03-DEC-83
DOTHIS.FTN       /TR:BLOCKS/WR

PROGRAM SECTIONS

NUMBER   NAME       SIZE                  ATTRIBUTES

  1      $CODE1  000534   174             RW,I,CON,LCL
  3      $IDATA  000100    32             RW,D,CON,LCL
  4      $VARS   007652  2005             RW,D,CON,LCL
  5      $TEMPS  000002     1             RW,D,CON,LCL
  6      SEEDS   000004     2             RW,D,OVR,GBL

ENTRY POINTS

 NAME    TYPE  ADDRESS     NAME    TYPE  ADDRESS     NAME    TYPE  ADDRESS     NAME    TYPE  ADDRESS

 PICK          1-000000

VARIABLES

 NAME    TYPE  ADDRESS     NAME    TYPE  ADDRESS     NAME    TYPE  ADDRESS     NAME    TYPE  ADDRESS

 COUNT   I*2   4-007642    END     I*2   F-000012*   I       I*2   4-007650    NITEM   I*2   4-007640
 POINT   I*2   4-007644    SEED1   I*2   6-000000    SEED2   I*2   6-000002    SEP     R*4   F-000014*
 TEMPCT  I*2   4-007646

 NAME    TYPE  ADDRESS

 NLIST   I*2   F-000004*
 START   I*2   F-000010*
```

```
ARRAYS

 NAME   TYPE  ADDRESS        SIZE        DIMENSIONS

 FREQ   R*4   F-000006* 000310   100     (50)
 LIST   R*4   F-000002* 007640  2000     (1000)
 TEMP   R*4   4-000000  007640  2000     (1000)

LABELS

 LABEL   ADDRESS          LABEL   ADDRESS          LABEL   ADDRESS          LABEL   ADDRESS

 5       1-000062         10        **             20      1-000156         30        **
 40      1-000434         50        **             51'     3-000000

FUNCTIONS AND SUBROUTINES REFERENCED

 RAN

TOTAL SPACE ALLOCATED = 010514  2214


FORTRAN IV-PLUS V02-51C          20:18:09     03-DEC-83
DOTHIS.FTN       /TR:BLOCKS/WR

0001             subroutine test
        c
        cccccccccccccccccccccccccccccccccccccccccccccccccccccccccccccccccccccccc
        c
        c        test - test the handed-off intermodulation product against
        c        all frequencies in the list 'freq'.  If they fall within
        c        delta f of a transmitter frequency, then score one hit.
        c
        c        EXTERNAL ASSIGNMENTS:
        c        ==================================================================
        c        freq - list of frequencies for this iteration
        c        end - number of frequencies in 'freq'
        c        improd - IM product frequency to be tested
        c        deltaf - min. 'safe' distance (MHz) from transmitter frequency
        c        hits - no. of occasions that 'improd' was within 'deltaf' of
        c               a frequency
        c        vflag - true if one of the contributing frequencies was a
        c                a VOR; special bandwidth may be required.
        c
        c        fflag - true if one of the contributing frequencies was an
        c                FM broadcast; special bandwidth may be required.
        c
        c
        c
        cccccccccccccccccccccccccccccccccccccccccccccccccccccccccccccccccccccccc
        c
0002             real*4 freq(50),improd,deltaf,bw,berth
0003             integer*2 i,end,hits
0004             logical*1 vflag,fflag
        c
0005             common/tester/freq,improd,deltaf,fmbw,hits,end,vflag,fflag
        c
        c
0006             do 50 i=1,end
0007                     berth=0                          ! reset guard band
0008                     if(freq(i).lt.118)berth=0.025    ! this freq. a VOR?
0009                     if(freq(i).le.108)berth=fmbw     ! this freq an FM?
0010                     if(berth.lt.deltaf)berth=deltaf  ! choose widest band
0011                     if(improd.gt.(freq(i)+berth))go to 50
0012                     if(improd.lt.(freq(i)-berth))go to 50
0013                     hits=hits+1
0014     50      continue
0015             return
0016             end
```

```
FORTRAN IV-PLUS V02-51C          20:18:09     03-DEC-83
DOTHIS.FTN       /TR:BLOCKS/WR

PROGRAM SECTIONS

NUMBER   NAME        SIZE                  ATTRIBUTES

  1      $CODE1   000230     76            RW,I,CON,LCL
  2      $PDATA   000004      2            RW,D,CON,LCL
  4      $VARS    000012      5            RW,D,CON,LCL
  5      $TEMPS   000002      1            RW,D,CON,LCL
  6      TESTER   000332    109            RW,D,OVR,GBL


ENTRY POINTS

 NAME    TYPE  ADDRESS     NAME    TYPE  ADDRESS     NAME    TYPE  ADDRESS     NAME    TYPE  ADDRESS

 TEST          1-000000


VARIABLES

 NAME    TYPE  ADDRESS     NAME    TYPE  ADDRESS     NAME    TYPE  ADDRESS     NAME    TYPE  ADDRESS

 BERTH   R*4   4-000004    BW      R*4   4-000000    DELTAF  R*4   6-000314    END     I*2   6-000326
 FMBW    R*4   6-000320    HITS    I*2   6-000324    I       I*2   4-000010    IMPROD  R*4   6-000310


 NAME    TYPE  ADDRESS

 FFLAG   L*1   6-000331
 VFLAG   L*1   6-000330


ARRAYS

 NAME    TYPE  ADDRESS        SIZE        DIMENSIONS

 FREQ    R*4   6-000000   000310    100    (50)


LABELS

 LABEL    ADDRESS          LABEL    ADDRESS          LABEL    ADDRESS          LABEL    ADDRESS

 50       1-000204


TOTAL SPACE ALLOCATED = 000602    193

,DOTHIS=DOTHIS
     3  !      14   !*
     4  !      13   !*
     5  !       2   !
     6  !       7   !
     7  !       2   !
     8  !       2   !
     9  !       2   !
    10  !       0   !
    11  !       0   !
    12  !       0   !
    13  !       0   !
    14  !       1   !
    15  !       0   !
    16  !       0   !
    17  !       0   !
    18  !       0   !
    19  !       0   !
    20  !       0   !
    21  !       0   !
    22  !       0   !
    23  !       0   !
    24  !       0   !
```

25	0
26	0
27	0
28	0
29	0
30	0
31	0
32	0
33	0
34	0
35	0
36	0
37	0
38	0
39	0
40	0
41	0
42	0
43	0
44	0
45	0
46	0
47	0
48	0
49	0
50	0
51	0
52	0
53	0
54	0
55	0
56	0
57	0
58	0
59	0
60	0
61	0
62	0
63	0
64	0
65	0
66	0
67	0
68	0
69	0
70	0
71	0
72	0
73	0
74	0
75	0
76	0
77	0

APPENDIX D

COMPUTER MODEL OUTPUT DATA

Appendix D contains a selected set of data resulting from the use of the computer model as described in Chapter Two and listed in Appendix C. Each output consists of two sections, the first indicating the input parameters used and the second presenting a histogram of intermodulation problems. The number of hits is the number of intermodulation problems noted; the number of times is the number of frequency sets which had the indicated number of intermodulation problems.

RANDOM FREQUENCY INTERMODULATION SIMULATION

NUMBER OF ITERATIONS: 100 DELTA F = 0.020 MHz

RANDOM VHF FREQUENCIES: 3 VHF SPACING = 1.500 MHz
RANDOM UHF FREQUENCIES: 3 UHF SPACING = 1.500 MHz

VHF EMERGENCY = 121.500 MHz UHF EMERGENCY = 243.000 MHz
VOR FREQUENCY = 114.500 MHz FM BROADCAST = 0.000 MHz
(forced bandwidth 25 kHz) (forced bandwidth +/- 0 kHz)
(Frequency of zero means not tested for)

INTERMODULATION PRODUCTS TESTED: 2f - f′
2f + f′
f - f′
f + f′
2f
3f

FREQUENCY CONFLICTS:
NUMBER OF POSSIBLE CONFLICTS: 2754.
MEAN CONFLICTS PER ITERATION: 2.2
STANDARD DEVIATION: 0.7

CONFLICT DISTRIBUTION FOLLOWS

FREQUENCY CONFLICT DISTRIBUTION - HITS vs. TIMES (NUMBER OF ITERATIONS)

(3 VHF, 3 UHF, delta f = 0.020, 100 iterations)

NUMBER OF HITS	NUMBER OF TIMES	
0	0	
1	0	
2	94	*********
3	1	
4	4	
5	0	
6	0	
7	0	
8	1	
9	0	
10	0	
11	0	
12	0	
13	0	
14	0	
15	0	
16	0	
17	0	
18	0	
19	0	
20	0	
21	0	
22	0	
23	0	
24	0	
25	0	
26	0	
27	0	

RANDOM FREQUENCY INTERMODULATION SIMULATION

NUMBER OF ITERATIONS: 100 DELTA F = 0.020 MHz

RANDOM VHF FREQUENCIES: 6 VHF SPACING = 1.500 MHz
RANDOM UHF FREQUENCIES: 6 UHF SPACING = 1.500 MHz

VHF EMERGENCY = 121.500 MHz UHF EMERGENCY = 243.000 MHz
VOR FREQUENCY = 114.500 MHz FM BROADCAST = 0.000 MHz
(forced bandwidth 25 kHz) (forced bandwidth +/- 0 kHz)
(Frequency of zero means not tested for)

INTERMODULATION PRODUCTS TESTED: 2f - f'
2f + f'
f - f'
f + f'
2f
3f

FREQUENCY CONFLICTS:
NUMBER OF POSSIBLE CONFLICTS: 13050.
MEAN CONFLICTS PER ITERATION: 2.9
STANDARD DEVIATION: 2.0

CONFLICT DISTRIBUTION FOLLOWS

FREQUENCY CONFLICT DISTRIBUTION - HITS vs. TIMES (NUMBER OF ITERATIONS)

(6 VHF, 6 UHF, delta f = 0.020, 100 iterations)

NUMBER OF HITS	NUMBER OF TIMES	
0	0	
1	0	
2	72	*******
3	7	
4	9	
5	1	
6	4	
7	2	
8	3	
9	1	
10	0	
11	0	
12	0	
13	0	
14	1	
15	0	
16	0	
17	0	
18	0	
19	0	
20	0	
21	0	
22	0	
23	0	
24	0	

RANDOM FREQUENCY INTERMODULATION SIMULATION

NUMBER OF ITERATIONS: 100 DELTA F = 0.020 MHz

RANDOM VHF FREQUENCIES: 9 VHF SPACING = 1.500 MHz
RANDOM UHF FREQUENCIES: 9 UHF SPACING = 1.500 MHz

VHF EMERGENCY = 121.500 MHz UHF EMERGENCY = 243.000 MHz
VOR FREQUENCY = 114.500 MHz FM BROADCAST = 0.000 MHz
(forced bandwidth 25 kHz) (forced bandwidth +/- 0 kHz)
(Frequency of zero means not tested for)

INTERMODULATION PRODUCTS TESTED: 2f - f'
2f + f'
f - f'
f + f'
2f
3f

FREQUENCY CONFLICTS:
NUMBER OF POSSIBLE CONFLICTS: 36162.
MEAN CONFLICTS PER ITERATION: 4.5
STANDARD DEVIATION: 2.7

CONFLICT DISTRIBUTION FOLLOWS

FREQUENCY CONFLICT DISTRIBUTION - HITS vs. TIMES (NUMBER OF ITERATIONS)

(9 VHF, 9 UHF, delta f = 0.020, 100 iterations)

NUMBER OF HITS	NUMBER OF TIMES	
0	0	
1	0	
2	37	**********
3	4	****
4	20	**********
5	5	*****
6	15	**********
7	3	***
8	9	*********
9	2	**
10	2	**
11	0	
12	1	*
13	0	
14	2	**
15	0	
16	0	
17	0	
18	0	
19	0	
20	0	
21	0	

```
                    RANDOM FREQUENCY INTERMODULATION SIMULATION
                    ===========================================

NUMBER OF ITERATIONS:   100              DELTA F =       0.020 MHz

RANDOM VHF FREQUENCIES:  12              VHF SPACING =  1.000 MHz
RANDOM UHF FREQUENCIES:  12              UHF SPACING =  1.500 MHz

VHF EMERGENCY = 121.500 MHz              UHF EMERGENCY = 243.000 MHz
VOR FREQUENCY = 114.500 MHz              FM BROADCAST =    0.000 MHz
(forced bandwidth 25 kHz)                  (forced bandwidth +/-   0 kHz)
                     (Frequency of zero means not tested for)

INTERMODULATION PRODUCTS TESTED:  2f - f'
                                  2f + f'
                                  f - f'
                                  f + f'
                                  2f
                                  3f

==============================================================================

FREQUENCY CONFLICTS:
     NUMBER OF POSSIBLE CONFLICTS:  77274.
     MEAN CONFLICTS PER ITERATION:    6.4
     STANDARD DEVIATION:              3.6

==============================================================================

CONFLICT DISTRIBUTION FOLLOWS


FREQUENCY CONFLICT DISTRIBUTION - HITS vs. TIMES (NUMBER OF ITERATIONS)

(12 VHF, 12 UHF, delta f =  0.020,   100 iterations)

NUMBER    NUMBER
OF HITS   OF TIMES
==============================================================================
     0  !      0   !
     1  !      0   !
     2  !     13   !*************
     3  !      8   !********
     4  !     19   !*******************
     5  !      8   !********
     6  !     16   !****************
     7  !      4   !****
     8  !      7   !*******
     9  !      4   !****
    10  !      6   !******
    11  !      3   !***
    12  !      4   !****
    13  !      1   !*
    14  !      4   !****
    15  !      3   !***
    16  !      0   !
    17  !      0   !
    18  !      0   !
==============================================================================
```

```
                    RANDOM FREQUENCY INTERMODULATION SIMULATION
                    ===========================================

NUMBER OF ITERATIONS:   100              DELTA F =       0.020 MHz

RANDOM VHF FREQUENCIES:   3              VHF SPACING =  1.500 MHz
RANDOM UHF FREQUENCIES:   3              UHF SPACING =  1.500 MHz

VHF EMERGENCY = 121.500 MHz              UHF EMERGENCY = 243.000 MHz
VOR FREQUENCY =   0.000 MHz              FM BROADCAST =  102.300 MHz
(forced bandwidth 25 kHz)                  (forced bandwidth +/-  50 kHz)
                      (Frequency of zero means not tested for)

INTERMODULATION PRODUCTS TESTED:  2f - f'
                                  2f + f'
                                  f - f'
                                  f + f'
                                  2f
                                  3f

==============================================================================

FREQUENCY CONFLICTS:
     NUMBER OF POSSIBLE CONFLICTS:   2754.
     MEAN CONFLICTS PER ITERATION:    2.2
     STANDARD DEVIATION:              1.0

==============================================================================

CONFLICT DISTRIBUTION FOLLOWS
```

FREQUENCY CONFLICT DISTRIBUTION - HITS vs. TIMES (NUMBER OF ITERATIONS)

(3 VHF, 3 UHF, delta f = 0.020, 100 iterations)

NUMBER OF HITS	NUMBER OF TIMES	
0	0	
1	0	
2	95	*********
3	2	
4	0	
5	0	
6	0	
7	1	
8	2	
9	0	
10	0	
11	0	
12	0	
13	0	
14	0	
15	0	
16	0	
17	0	
18	0	
19	0	
20	0	
21	0	
22	0	
23	0	
24	0	
25	0	
26	0	
27	0	
28	0	
29	0	
30	0	
31	0	
32	0	
33	0	
34	0	

RANDOM FREQUENCY INTERMODULATION SIMULATION

NUMBER OF ITERATIONS: 100 DELTA F = 0.020 MHz

RANDOM VHF FREQUENCIES: 6 VHF SPACING = 1.500 MHz
RANDOM UHF FREQUENCIES: 6 UHF SPACING = 1.500 MHz

VHF EMERGENCY = 121.500 MHz UHF EMERGENCY = 243.000 MHz
VOR FREQUENCY = 0.000 MHz FM BROADCAST = 102.300 MHz
(forced bandwidth 25 kHz) (forced bandwidth +/- 50 kHz)
(Frequency of zero means not tested for)

INTERMODULATION PRODUCTS TESTED: 2f - f'
2f + f'
f - f'
f + f'
2f
3f

FREQUENCY CONFLICTS:
NUMBER OF POSSIBLE CONFLICTS: 13050.
MEAN CONFLICTS PER ITERATION: 2.3
STANDARD DEVIATION: 0.8

CONFLICT DISTRIBUTION FOLLOWS

FREQUENCY CONFLICT DISTRIBUTION - HITS vs. TIMES (NUMBER OF ITERATIONS)

(6 VHF, 6 UHF, delta f = 0.020, 100 iterations)

NUMBER OF HITS	NUMBER OF TIMES	
0	0	
1	0	
2	81	********
3	9	
4	8	
5	0	
6	2	
7	0	
8	0	
9	0	
10	0	
11	0	
12	0	
13	0	
14	0	
15	0	
16	0	
17	0	
18	0	
19	0	
20	0	
21	0	
22	0	
23	0	
24	0	
25	0	
26	0	
27	0	
28	0	
29	0	
30	0	
31	0	

RANDOM FREQUENCY INTERMODULATION SIMULATION

NUMBER OF ITERATIONS: 100 DELTA F = 0.020 MHz

RANDOM VHF FREQUENCIES: 9 VHF SPACING = 1.500 MHz
RANDOM UHF FREQUENCIES: 9 UHF SPACING = 1.500 MHz

VHF EMERGENCY = 121.500 MHz UHF EMERGENCY = 243.000 MHz
VOR FREQUENCY = 0.000 MHz FM BROADCAST = 102.300 MHz
(forced bandwidth 25 kHz) (forced bandwidth +/- 50 kHz)
(Frequency of zero means not tested for)

INTERMODULATION PRODUCTS TESTED: 2f - f'
2f + f'
f - f'
f + f'
2f
3f

FREQUENCY CONFLICTS:
NUMBER OF POSSIBLE CONFLICTS: 36162.
MEAN CONFLICTS PER ITERATION: 4.2
STANDARD DEVIATION: 2.5

CONFLICT DISTRIBUTION FOLLOWS

FREQUENCY CONFLICT DISTRIBUTION - HITS vs. TIMES (NUMBER OF ITERATIONS)

(9 VHF, 9 UHF, delta f = 0.020, 100 iterations)

NUMBER OF HITS	NUMBER OF TIMES	
0	0	
1	0	
2	37	**********
3	10	**********
4	19	**********
5	7	*******
6	16	**********
7	0	
8	4	****
9	1	*
10	2	**
11	2	**
12	1	*
13	0	
14	1	*
15	0	
16	0	
17	0	
18	0	
19	0	
20	0	
21	0	
22	0	
23	0	
24	0	
25	0	
26	0	
27	0	
28	0	

RANDOM FREQUENCY INTERMODULATION SIMULATION

NUMBER OF ITERATIONS: 100 DELTA F = 0.020 MHz

RANDOM VHF FREQUENCIES: 12 VHF SPACING = 1.000 MHz
RANDOM UHF FREQUENCIES: 12 UHF SPACING = 1.500 MHz

VHF EMERGENCY = 121.500 MHz UHF EMERGENCY = 243.000 MHz
VOR FREQUENCY = 0.000 MHz FM BROADCAST = 102.300 MHz
(forced bandwidth 25 kHz) (forced bandwidth +/- 50 kHz)
(Frequency of zero means not tested for)

INTERMODULATION PRODUCTS TESTED:
2f - f′
2f + f′
f - f′
f + f′
2f
3f

FREQUENCY CONFLICTS:
NUMBER OF POSSIBLE CONFLICTS: 77274.
MEAN CONFLICTS PER ITERATION: 5.9
STANDARD DEVIATION: 3.8

CONFLICT DISTRIBUTION FOLLOWS

FREQUENCY CONFLICT DISTRIBUTION - HITS vs. TIMES (NUMBER OF ITERATIONS)

(12 VHF, 12 UHF, delta f = 0.020, 100 iterations)

NUMBER OF HITS	NUMBER OF TIMES	
0	0	
1	0	
2	17	**********
3	6	******
4	26	**********
5	4	****
6	15	**********
7	5	*****
8	9	*********
9	3	***
10	5	*****
11	2	**
12	1	*
13	2	**
14	2	**
15	0	
16	1	*
17	0	
18	0	
19	1	*
20	0	
21	0	
22	1	*
23	0	
24	0	
25	0	

```
                    RANDOM FREQUENCY INTERMODULATION SIMULATION
                    ===========================================

NUMBER OF ITERATIONS:   100              DELTA F =       0.020 MHz

RANDOM VHF FREQUENCIES:   3              VHF SPACING =  1.500 MHz
RANDOM UHF FREQUENCIES:   3              UHF SPACING =  1.500 MHz

VHF EMERGENCY = 121.500 MHz              UHF EMERGENCY = 243.000 MHz
VOR FREQUENCY = 114.500 MHz              FM BROADCAST =  102.300 MHz
(forced bandwidth 25 kHz)                  (forced bandwidth +/-  50 kHz)
                     (Frequency of zero means not tested for)

INTERMODULATION PRODUCTS TESTED:  2f - f'
                                  2f + f'
                                  f - f'
                                  f + f'
                                  2f
                                  3f

==============================================================================

FREQUENCY CONFLICTS:
     NUMBER OF POSSIBLE CONFLICTS:   3800.
     MEAN CONFLICTS PER ITERATION:    2.2
     STANDARD DEVIATION:              0.6

==============================================================================

CONFLICT DISTRIBUTION FOLLOWS
```

FREQUENCY CONFLICT DISTRIBUTION - HITS vs. TIMES (NUMBER OF ITERATIONS)

(3 VHF, 3 UHF, delta f = 0.020, 100 iterations)

NUMBER OF HITS	NUMBER OF TIMES	
0	0	
1	0	
2	91	*********
3	4	
4	4	
5	0	
6	1	
7	0	
8	0	
9	0	
10	0	
11	0	
12	0	
13	0	
14	0	
15	0	
16	0	
17	0	
18	0	
19	0	
20	0	
21	0	
22	0	
23	0	
24	0	
25	0	
26	0	
27	0	
28	0	
29	0	
30	0	
31	0	
32	0	
33	0	
34	0	
35	0	
36	0	
37	0	
38	0	
39	0	

```
                    RANDOM FREQUENCY INTERMODULATION SIMULATION
                    ===========================================

NUMBER OF ITERATIONS:   100              DELTA F =       0.020 MHz

RANDOM VHF FREQUENCIES:   6              VHF SPACING =  1.500 MHz
RANDOM UHF FREQUENCIES:   6              UHF SPACING =  1.500 MHz

VHF EMERGENCY = 121.500 MHz              UHF EMERGENCY = 243.000 MHz
VOR FREQUENCY = 114.500 MHz              FM BROADCAST =  102.300 MHz
(forced bandwidth 25 kHz)                  (forced bandwidth +/-  50 kHz)
                     (Frequency of zero means not tested for)

INTERMODULATION PRODUCTS TESTED:  2f - f'
                                  2f + f'
                                  f - f'
                                  f + f'
                                  2f
                                  3f

==============================================================================

FREQUENCY CONFLICTS:
     NUMBER OF POSSIBLE CONFLICTS:  15872.
     MEAN CONFLICTS PER ITERATION:    3.0
     STANDARD DEVIATION:              1.9

==============================================================================

CONFLICT DISTRIBUTION FOLLOWS
```

FREQUENCY CONFLICT DISTRIBUTION - HITS vs. TIMES (NUMBER OF ITERATIONS)

(6 VHF, 6 UHF, delta f = 0.020, 100 iterations)

NUMBER OF HITS	NUMBER OF TIMES	
0	0	
1	0	
2	64	******
3	12	*
4	12	*
5	2	
6	3	
7	2	
8	3	
9	1	
10	0	
11	0	
12	0	
13	1	
14	0	
15	0	
16	0	
17	0	
18	0	
19	0	
20	0	
21	0	
22	0	
23	0	
24	0	
25	0	
26	0	
27	0	
28	0	
29	0	
30	0	
31	0	
32	0	
33	0	
34	0	
35	0	
36	0	

```
                    RANDOM FREQUENCY INTERMODULATION SIMULATION
                    ===========================================

NUMBER OF ITERATIONS:   100              DELTA F =      0.020 MHz

RANDOM VHF FREQUENCIES:   9              VHF SPACING =  1.500 MHz
RANDOM UHF FREQUENCIES:   9              UHF SPACING =  1.500 MHz

VHF EMERGENCY = 121.500 MHz              UHF EMERGENCY = 243.000 MHz
VOR FREQUENCY = 114.500 MHz              FM BROADCAST =  102.300 MHz
(forced bandwidth 25 kHz)                  (forced bandwidth +/-  50 kHz)
                     (Frequency of zero means not tested for)

INTERMODULATION PRODUCTS TESTED:  2f - f'
                                  2f + f'
                                  f - f'
                                  f + f'
                                  2f
                                  3f

==============================================================================

FREQUENCY CONFLICTS:
     NUMBER OF POSSIBLE CONFLICTS:  41624.
     MEAN CONFLICTS PER ITERATION:    5.0
     STANDARD DEVIATION:              2.9

==============================================================================

CONFLICT DISTRIBUTION FOLLOWS
```

FREQUENCY CONFLICT DISTRIBUTION - HITS vs. TIMES (NUMBER OF ITERATIONS)

(9 VHF, 9 UHF, delta f = 0.020, 100 iterations)

NUMBER OF HITS	NUMBER OF TIMES	
0	0	
1	0	
2	25	**********
3	10	**********
4	21	**********
5	7	*******
6	15	**********
7	1	*
8	10	**********
9	2	**
10	5	*****
11	1	*
12	1	*
13	0	
14	1	*
15	0	
16	1	*
17	0	
18	0	
19	0	
20	0	
21	0	
22	0	
23	0	
24	0	
25	0	
26	0	
27	0	
28	0	
29	0	
30	0	
31	0	
32	0	
33	0	

```
                    RANDOM FREQUENCY INTERMODULATION SIMULATION
                    ===========================================

NUMBER OF ITERATIONS:   100              DELTA F =       0.020 MHz

RANDOM VHF FREQUENCIES:  12              VHF SPACING =  1.000 MHz
RANDOM UHF FREQUENCIES:  12              UHF SPACING =  1.500 MHz

VHF EMERGENCY = 121.500 MHz              UHF EMERGENCY = 243.000 MHz
VOR FREQUENCY = 114.500 MHz              FM BROADCAST =  102.300 MHz
(forced bandwidth 25 kHz)                  (forced bandwidth +/-  50 kHz)
                     (Frequency of zero means not tested for)

INTERMODULATION PRODUCTS TESTED:  2f - f'
                                  2f + f'
                                  f - f'
                                  f + f'
                                  2f
                                  3f

==============================================================================

FREQUENCY CONFLICTS:
     NUMBER OF POSSIBLE CONFLICTS:  86240.
     MEAN CONFLICTS PER ITERATION:    7.8
     STANDARD DEVIATION:              4.3

==============================================================================

CONFLICT DISTRIBUTION FOLLOWS
```

FREQUENCY CONFLICT DISTRIBUTION - HITS vs. TIMES (NUMBER OF ITERATIONS)

(12 VHF, 12 UHF, delta f = 0.020, 100 iterations)

NUMBER OF HITS	NUMBER OF TIMES	
0	0	
1	0	
2	5	*****
3	1	*
4	18	**********
5	13	**********
6	13	**********
7	5	*****
8	10	**********
9	3	***
10	6	******
11	9	*********
12	5	*****
13	3	***
14	3	***
15	2	**
16	0	
17	1	*
18	1	*
19	0	
20	1	*
21	0	
22	0	
23	0	
24	0	
25	0	
26	0	
27	1	*
28	0	
29	0	
30	0	

RANDOM FREQUENCY INTERMODULATION SIMULATION

NUMBER OF ITERATIONS: 100 DELTA F = 0.010 MHz

RANDOM VHF FREQUENCIES: 3 VHF SPACING = 1.500 MHz
RANDOM UHF FREQUENCIES: 3 UHF SPACING = 1.500 MHz

VHF EMERGENCY = 121.500 MHz UHF EMERGENCY = 243.000 MHz
VOR FREQUENCY = 114.500 MHz FM BROADCAST = 0.000 MHz
(forced bandwidth 25 kHz) (forced bandwidth +/- 0 kHz)
(Frequency of zero means not tested for)

INTERMODULATION PRODUCTS TESTED: 2f - f'
2f + f'
f - f'
f + f'
2f
3f

FREQUENCY CONFLICTS:
NUMBER OF POSSIBLE CONFLICTS: 2754.
MEAN CONFLICTS PER ITERATION: 2.2
STANDARD DEVIATION: 0.9

CONFLICT DISTRIBUTION FOLLOWS

FREQUENCY CONFLICT DISTRIBUTION - HITS vs. TIMES (NUMBER OF ITERATIONS)

(3 VHF, 3 UHF, delta f = 0.010, 100 iterations)

NUMBER OF HITS	NUMBER OF TIMES	
0	0	
1	0	
2	92	*********
3	4	
4	2	
5	0	
6	0	
7	0	
8	2	
9	0	
10	0	
11	0	
12	0	
13	0	
14	0	
15	0	
16	0	
17	0	
18	0	
19	0	
20	0	
21	0	
22	0	
23	0	
24	0	
25	0	
26	0	
27	0	
28	0	

RANDOM FREQUENCY INTERMODULATION SIMULATION

NUMBER OF ITERATIONS: 100 DELTA F = 0.010 MHz

RANDOM VHF FREQUENCIES: 6 VHF SPACING = 1.500 MHz
RANDOM UHF FREQUENCIES: 6 UHF SPACING = 1.500 MHz

VHF EMERGENCY = 121.500 MHz UHF EMERGENCY = 243.000 MHz
VOR FREQUENCY = 114.500 MHz FM BROADCAST = 0.000 MHz
(forced bandwidth 25 kHz) (forced bandwidth +/- 0 kHz)
(Frequency of zero means not tested for)

INTERMODULATION PRODUCTS TESTED: 2f - f'
2f + f'
f - f'
f + f'
2f
3f

FREQUENCY CONFLICTS:
NUMBER OF POSSIBLE CONFLICTS: 13050.
MEAN CONFLICTS PER ITERATION: 2.9
STANDARD DEVIATION: 1.9

CONFLICT DISTRIBUTION FOLLOWS

FREQUENCY CONFLICT DISTRIBUTION - HITS vs. TIMES (NUMBER OF ITERATIONS)

(6 VHF, 6 UHF, delta f = 0.010, 100 iterations)

NUMBER OF HITS	NUMBER OF TIMES	
0	0	
1	0	
2	73	*******
3	4	
4	11	*
5	0	
6	5	
7	0	
8	5	
9	0	
10	2	
11	0	
12	0	
13	0	
14	0	
15	0	
16	0	
17	0	
18	0	
19	0	
20	0	
21	0	
22	0	
23	0	
24	0	
25	0	

RANDOM FREQUENCY INTERMODULATION SIMULATION

NUMBER OF ITERATIONS: 100 DELTA F = 0.010 MHz

RANDOM VHF FREQUENCIES: 9 VHF SPACING = 1.500 MHz
RANDOM UHF FREQUENCIES: 9 UHF SPACING = 1.500 MHz

VHF EMERGENCY = 121.500 MHz UHF EMERGENCY = 243.000 MHz
VOR FREQUENCY = 114.500 MHz FM BROADCAST = 0.000 MHz
(forced bandwidth 25 kHz) (forced bandwidth +/- 0 kHz)
(Frequency of zero means not tested for)

INTERMODULATION PRODUCTS TESTED: 2f - f'
2f + f'
f - f'
f + f'
2f
3f

FREQUENCY CONFLICTS:
NUMBER OF POSSIBLE CONFLICTS: 36162.
MEAN CONFLICTS PER ITERATION: 3.9
STANDARD DEVIATION: 2.1

CONFLICT DISTRIBUTION FOLLOWS

FREQUENCY CONFLICT DISTRIBUTION - HITS vs. TIMES (NUMBER OF ITERATIONS)

(9 VHF, 9 UHF, delta f = 0.010, 100 iterations)

NUMBER OF HITS	NUMBER OF TIMES	
0	0	
1	0	
2	32	**********
3	11	**********
4	36	**********
5	3	***
6	8	********
7	0	
8	6	******
9	2	**
10	0	
11	1	*
12	1	*
13	0	
14	0	
15	0	
16	0	
17	0	
18	0	
19	0	
20	0	
21	0	
22	0	

RANDOM FREQUENCY INTERMODULATION SIMULATION

NUMBER OF ITERATIONS: 100 DELTA F = 0.010 MHz

RANDOM VHF FREQUENCIES: 12 VHF SPACING = 1.000 MHz
RANDOM UHF FREQUENCIES: 12 UHF SPACING = 1.500 MHz

VHF EMERGENCY = 121.500 MHz UHF EMERGENCY = 243.000 MHz
VOR FREQUENCY = 114.500 MHz FM BROADCAST = 0.000 MHz
(forced bandwidth 25 kHz) (forced bandwidth +/- 0 kHz)
(Frequency of zero means not tested for)

INTERMODULATION PRODUCTS TESTED: 2f - f'
2f + f'
f - f'
f + f'
2f
3f

FREQUENCY CONFLICTS:
NUMBER OF POSSIBLE CONFLICTS: 77274.
MEAN CONFLICTS PER ITERATION: 6.6
STANDARD DEVIATION: 3.6

CONFLICT DISTRIBUTION FOLLOWS

FREQUENCY CONFLICT DISTRIBUTION - HITS vs. TIMES (NUMBER OF ITERATIONS)

(12 VHF, 12 UHF, delta f = 0.010, 100 iterations)

NUMBER OF HITS	NUMBER OF TIMES	
0	0	
1	0	
2	15	**********
3	3	***
4	16	**********
5	10	**********
6	17	**********
7	1	*
8	12	**********
9	5	*****
10	8	********
11	3	***
12	1	*
13	3	***
14	3	***
15	1	*
16	2	**
17	0	
18	0	
19	0	

```
                    RANDOM FREQUENCY INTERMODULATION SIMULATION
                    ===========================================

NUMBER OF ITERATIONS:   100              DELTA F =       0.010 MHz

RANDOM VHF FREQUENCIES:   3              VHF SPACING =  1.500 MHz
RANDOM UHF FREQUENCIES:   3              UHF SPACING =  1.500 MHz

VHF EMERGENCY = 121.500 MHz              UHF EMERGENCY = 243.000 MHz
VOR FREQUENCY =   0.000 MHz              FM BROADCAST =  102.300 MHz
(forced bandwidth 25 kHz)                  (forced bandwidth +/-  50 kHz)
                     (Frequency of zero means not tested for)

INTERMODULATION PRODUCTS TESTED:  2f - f'
                                  2f + f'
                                  f - f'
                                  f + f'
                                  2f
                                  3f

==============================================================================

FREQUENCY CONFLICTS:
     NUMBER OF POSSIBLE CONFLICTS:   2754.
     MEAN CONFLICTS PER ITERATION:    2.1
     STANDARD DEVIATION:              0.7

==============================================================================

CONFLICT DISTRIBUTION FOLLOWS
```

FREQUENCY CONFLICT DISTRIBUTION - HITS vs. TIMES (NUMBER OF ITERATIONS)

(3 VHF, 3 UHF, delta f = 0.010, 100 iterations)

NUMBER OF HITS	NUMBER OF TIMES	
0	0	
1	0	
2	95	*********
3	1	
4	2	
5	0	
6	1	
7	1	
8	0	
9	0	
10	0	
11	0	
12	0	
13	0	
14	0	
15	0	
16	0	
17	0	
18	0	
19	0	
20	0	
21	0	
22	0	
23	0	
24	0	
25	0	
26	0	
27	0	
28	0	
29	0	
30	0	
31	0	
32	0	

```
                    RANDOM FREQUENCY INTERMODULATION SIMULATION
                    ===========================================

NUMBER OF ITERATIONS:   100              DELTA F =       0.010 MHz

RANDOM VHF FREQUENCIES:   6              VHF SPACING =  1.500 MHz
RANDOM UHF FREQUENCIES:   6              UHF SPACING =  1.500 MHz


VHF EMERGENCY = 121.500 MHz              UHF EMERGENCY = 243.000 MHz
VOR FREQUENCY =   0.000 MHz              FM BROADCAST =  102.300 MHz
(forced bandwidth 25 kHz)                  (forced bandwidth +/-  50 kHz)
                     (Frequency of zero means not tested for)


INTERMODULATION PRODUCTS TESTED:  2f - f'
                                  2f + f'
                                  f - f'
                                  f + f'
                                  2f
                                  3f

==============================================================================

FREQUENCY CONFLICTS:
     NUMBER OF POSSIBLE CONFLICTS:  13050.
     MEAN CONFLICTS PER ITERATION:    2.5
     STANDARD DEVIATION:              1.4

==============================================================================

CONFLICT DISTRIBUTION FOLLOWS
```

FREQUENCY CONFLICT DISTRIBUTION - HITS vs. TIMES (NUMBER OF ITERATIONS)

(6 VHF, 6 UHF, delta f = 0.010, 100 iterations)

NUMBER OF HITS	NUMBER OF TIMES	
0	0	
1	0	
2	82	********
3	4	
4	8	
5	0	
6	4	
7	1	
8	0	
9	0	
10	0	
11	0	
12	1	
13	0	
14	0	
15	0	
16	0	
17	0	
18	0	
19	0	
20	0	
21	0	
22	0	
23	0	
24	0	
25	0	
26	0	
27	0	
28	0	
29	0	

RANDOM FREQUENCY INTERMODULATION SIMULATION

NUMBER OF ITERATIONS: 100 DELTA F = 0.010 MHz

RANDOM VHF FREQUENCIES: 9 VHF SPACING = 1.500 MHz
RANDOM UHF FREQUENCIES: 9 UHF SPACING = 1.500 MHz

VHF EMERGENCY = 121.500 MHz UHF EMERGENCY = 243.000 MHz
VOR FREQUENCY = 0.000 MHz FM BROADCAST = 102.300 MHz
(forced bandwidth 25 kHz) (forced bandwidth +/- 50 kHz)
(Frequency of zero means not tested for)

INTERMODULATION PRODUCTS TESTED: 2f - f'
2f + f'
f - f'
f + f'
2f
3f

FREQUENCY CONFLICTS:
NUMBER OF POSSIBLE CONFLICTS: 36162.
MEAN CONFLICTS PER ITERATION: 4.1
STANDARD DEVIATION: 2.3

CONFLICT DISTRIBUTION FOLLOWS

FREQUENCY CONFLICT DISTRIBUTION - HITS vs. TIMES (NUMBER OF ITERATIONS)

(9 VHF, 9 UHF, delta f = 0.010, 100 iterations)

NUMBER OF HITS	NUMBER OF TIMES	
0	0	
1	0	
2	35	**********
3	9	*********
4	27	**********
5	6	******
6	13	**********
7	2	**
8	2	**
9	2	**
10	2	**
11	1	*
12	0	
13	0	
14	1	*
15	0	
16	0	
17	0	
18	0	
19	0	
20	0	
21	0	
22	0	
23	0	
24	0	
25	0	
26	0	

RANDOM FREQUENCY INTERMODULATION SIMULATION

NUMBER OF ITERATIONS: 100 DELTA F = 0.010 MHz

RANDOM VHF FREQUENCIES: 12 VHF SPACING = 1.000 MHz
RANDOM UHF FREQUENCIES: 12 UHF SPACING = 1.500 MHz

VHF EMERGENCY = 121.500 MHz UHF EMERGENCY = 243.000 MHz
VOR FREQUENCY = 0.000 MHz FM BROADCAST = 102.300 MHz
(forced bandwidth 25 kHz) (forced bandwidth +/- 50 kHz)
(Frequency of zero means not tested for)

INTERMODULATION PRODUCTS TESTED: 2f - f'
2f + f'
f - f'
f + f'
2f
3f

FREQUENCY CONFLICTS:
NUMBER OF POSSIBLE CONFLICTS: 77274.
MEAN CONFLICTS PER ITERATION: 6.2
STANDARD DEVIATION: 3.5

CONFLICT DISTRIBUTION FOLLOWS

FREQUENCY CONFLICT DISTRIBUTION - HITS vs. TIMES (NUMBER OF ITERATIONS)

(12 VHF, 12 UHF, delta f = 0.010, 100 iterations)

NUMBER OF HITS	NUMBER OF TIMES	
0	0	
1	0	
2	16	**********
3	3	***
4	19	**********
5	11	**********
6	13	**********
7	10	**********
8	10	**********
9	3	***
10	6	******
11	2	**
12	1	*
13	1	*
14	2	**
15	0	
16	1	*
17	1	*
18	0	
19	0	
20	1	*
21	0	
22	0	
23	0	

```
                    RANDOM FREQUENCY INTERMODULATION SIMULATION
                    ===========================================

NUMBER OF ITERATIONS:   100              DELTA F =       0.010 MHz

RANDOM VHF FREQUENCIES:   3              VHF SPACING =  1.500 MHz
RANDOM UHF FREQUENCIES:   3              UHF SPACING =  1.500 MHz

VHF EMERGENCY = 121.500 MHz              UHF EMERGENCY = 243.000 MHz
VOR FREQUENCY = 114.500 MHz              FM BROADCAST =  102.300 MHz
(forced bandwidth 25 kHz)                  (forced bandwidth +/-  50 kHz)
                     (Frequency of zero means not tested for)

INTERMODULATION PRODUCTS TESTED:  2f - f'
                                  2f + f'
                                  f - f'
                                  f + f'
                                  2f
                                  3f

==============================================================================

FREQUENCY CONFLICTS:
     NUMBER OF POSSIBLE CONFLICTS:   3800.
     MEAN CONFLICTS PER ITERATION:    2.2
     STANDARD DEVIATION:              0.7

==============================================================================

CONFLICT DISTRIBUTION FOLLOWS
```

FREQUENCY CONFLICT DISTRIBUTION - HITS vs. TIMES (NUMBER OF ITERATIONS)

(3 VHF, 3 UHF, delta f = 0.010, 100 iterations)

NUMBER OF HITS	NUMBER OF TIMES	
0	0	
1	0	
2	88	********
3	5	
4	5	
5	0	
6	2	
7	0	
8	0	
9	0	
10	0	
11	0	
12	0	
13	0	
14	0	
15	0	
16	0	
17	0	
18	0	
19	0	
20	0	
21	0	
22	0	
23	0	
24	0	
25	0	
26	0	
27	0	
28	0	
29	0	
30	0	
31	0	
32	0	
33	0	

```
                    RANDOM FREQUENCY INTERMODULATION SIMULATION
                    ===========================================

NUMBER OF ITERATIONS:   100              DELTA F =       0.010 MHz

RANDOM VHF FREQUENCIES:   6              VHF SPACING =  1.500 MHz
RANDOM UHF FREQUENCIES:   6              UHF SPACING =  1.500 MHz

VHF EMERGENCY = 121.500 MHz              UHF EMERGENCY = 243.000 MHz
VOR FREQUENCY = 114.500 MHz              FM BROADCAST =  102.300 MHz
(forced bandwidth 25 kHz)                  (forced bandwidth +/-  50 kHz)
                     (Frequency of zero means not tested for)

INTERMODULATION PRODUCTS TESTED:  2f - f'
                                  2f + f'
                                  f - f'
                                  f + f'
                                  2f
                                  3f

==============================================================================

FREQUENCY CONFLICTS:
     NUMBER OF POSSIBLE CONFLICTS:  15872.
     MEAN CONFLICTS PER ITERATION:    3.1
     STANDARD DEVIATION:              1.8

==============================================================================

CONFLICT DISTRIBUTION FOLLOWS
```

FREQUENCY CONFLICT DISTRIBUTION - HITS vs. TIMES (NUMBER OF ITERATIONS)

(6 VHF, 6 UHF, delta f = 0.010, 100 iterations)

NUMBER OF HITS	NUMBER OF TIMES	
0	0	
1	0	
2	61	******
3	8	
4	15	*
5	3	
6	4	
7	4	
8	4	
9	1	
10	0	
11	0	
12	0	
13	0	
14	0	
15	0	
16	0	
17	0	
18	0	
19	0	
20	0	
21	0	
22	0	
23	0	
24	0	
25	0	
26	0	
27	0	
28	0	
29	0	
30	0	

RANDOM FREQUENCY INTERMODULATION SIMULATION

NUMBER OF ITERATIONS: 100 DELTA F = 0.010 MHz

RANDOM VHF FREQUENCIES: 9 VHF SPACING = 1.500 MHz
RANDOM UHF FREQUENCIES: 9 UHF SPACING = 1.500 MHz

VHF EMERGENCY = 121.500 MHz UHF EMERGENCY = 243.000 MHz
VOR FREQUENCY = 114.500 MHz FM BROADCAST = 102.300 MHz
(forced bandwidth 25 kHz) (forced bandwidth +/- 50 kHz)
(Frequency of zero means not tested for)

INTERMODULATION PRODUCTS TESTED: 2f - f'
2f + f'
f - f'
f + f'
2f
3f

FREQUENCY CONFLICTS:
NUMBER OF POSSIBLE CONFLICTS: 41624.
MEAN CONFLICTS PER ITERATION: 5.3
STANDARD DEVIATION: 2.8

CONFLICT DISTRIBUTION FOLLOWS

FREQUENCY CONFLICT DISTRIBUTION - HITS vs. TIMES (NUMBER OF ITERATIONS)

(9 VHF, 9 UHF, delta f = 0.010, 100 iterations)

NUMBER OF HITS	NUMBER OF TIMES	
0	0	
1	0	
2	19	**********
3	6	******
4	25	**********
5	6	******
6	16	**********
7	6	******
8	10	**********
9	3	***
10	2	**
11	3	***
12	3	***
13	0	
14	1	*
15	0	
16	0	
17	0	
18	0	
19	0	
20	0	
21	0	
22	0	
23	0	
24	0	
25	0	
26	0	
27	0	

RANDOM FREQUENCY INTERMODULATION SIMULATION

NUMBER OF ITERATIONS: 100 DELTA F = 0.010 MHz

RANDOM VHF FREQUENCIES: 12 VHF SPACING = 1.000 MHz
RANDOM UHF FREQUENCIES: 12 UHF SPACING = 1.500 MHz

VHF EMERGENCY = 121.500 MHz UHF EMERGENCY = 243.000 MHz
VOR FREQUENCY = 114.500 MHz FM BROADCAST = 102.300 MHz
(forced bandwidth 25 kHz) (forced bandwidth +/- 50 kHz)
(Frequency of zero means not tested for)

INTERMODULATION PRODUCTS TESTED: 2f - f'
2f + f'
f - f'
f + f'
2f
3f

FREQUENCY CONFLICTS:
NUMBER OF POSSIBLE CONFLICTS: 86240.
MEAN CONFLICTS PER ITERATION: 7.1
STANDARD DEVIATION: 4.3

CONFLICT DISTRIBUTION FOLLOWS

FREQUENCY CONFLICT DISTRIBUTION - HITS vs. TIMES (NUMBER OF ITERATIONS)

(12 VHF, 12 UHF, delta f = 0.010, 100 iterations)

NUMBER OF HITS	NUMBER OF TIMES	
0	0	
1	0	
2	4	****
3	12	**********
4	13	**********
5	18	**********
6	15	**********
7	3	***
8	10	**********
9	6	******
10	2	**
11	3	***
12	2	**
13	0	
14	2	**
15	3	***
16	1	*
17	0	
18	3	***
19	2	**
20	0	
21	1	*
22	0	
23	0	
24	0	

```
                    RANDOM FREQUENCY INTERMODULATION SIMULATION
                    ===========================================

NUMBER OF ITERATIONS:   100                DELTA F =       0.020 MHz

RANDOM VHF FREQUENCIES:   3                VHF SPACING =  1.500 MHz
RANDOM UHF FREQUENCIES:   3                UHF SPACING =  1.500 MHz

VHF EMERGENCY = 121.500 MHz                UHF EMERGENCY = 243.000 MHz
VOR FREQUENCY =   0.000 MHz                FM BROADCAST =    0.000 MHz
(forced bandwidth 25 kHz)                    (forced bandwidth 75 kHz)
                      (Frequency of zero means not tested for)

INTERMODULATION PRODUCTS TESTED:  2f - f'
                                  2f + f'
                                  f - f'
                                  f + f'
                                  2f
                                  3f

==============================================================================

FREQUENCY CONFLICTS:
     NUMBER OF POSSIBLE CONFLICTS:   1920.
     MEAN CONFLICTS PER ITERATION:    2.0
     STANDARD DEVIATION:              0.2

==============================================================================

CONFLICT DISTRIBUTION FOLLOWS


FREQUENCY CONFLICT DISTRIBUTION - HITS vs. TIMES (NUMBER OF ITERATIONS)

( 3 VHF,  3 UHF, delta f =  0.020,   100 iterations)

NUMBER    NUMBER
OF HITS   OF TIMES
==============================================================================
     0  !      0   !
     1  !      0   !
     2  !     98   !*********
     3  !      1   !
     4  !      1   !
     5  !      0   !
     6  !      0   !
     7  !      0   !
==============================================================================
```

```
                    RANDOM FREQUENCY INTERMODULATION SIMULATION
                    ===========================================

NUMBER OF ITERATIONS:   100                DELTA F =       0.020 MHz

RANDOM VHF FREQUENCIES:   6                VHF SPACING =  1.500 MHz
RANDOM UHF FREQUENCIES:   6                UHF SPACING =  1.500 MHz

VHF EMERGENCY = 121.500 MHz                UHF EMERGENCY = 243.000 MHz
VOR FREQUENCY =   0.000 MHz                FM BROADCAST =    0.000 MHz
(forced bandwidth 25 kHz)                    (forced bandwidth 75 kHz)
                     (Frequency of zero means not tested for)

INTERMODULATION PRODUCTS TESTED:  2f - f'
                                  2f + f'
                                  f - f'
                                  f + f'
                                  2f
                                  3f

==============================================================================

FREQUENCY CONFLICTS:
     NUMBER OF POSSIBLE CONFLICTS:  10584.
     MEAN CONFLICTS PER ITERATION:    2.4
     STANDARD DEVIATION:              1.2

==============================================================================

CONFLICT DISTRIBUTION FOLLOWS


 FREQUENCY CONFLICT DISTRIBUTION - HITS vs. TIMES (NUMBER OF ITERATIONS)

 ( 6 VHF,  6 UHF, delta f =  0.020,   100 iterations)

 NUMBER     NUMBER
 OF HITS    OF TIMES
 ==============================================================================
      0  :       0   :
      1  :       0   :
      2  :      86   :********
      3  :       1   :
      4  :      10   :*
      5  :       0   :
      6  :       1   :
      7  :       0   :
      8  :       1   :
      9  :       0   :
     10  :       1   :
     11  :       0   :
     12  :       0   :
     13  :       0   :
 ==============================================================================
```

```
                    RANDOM FREQUENCY INTERMODULATION SIMULATION
                    ===========================================

NUMBER OF ITERATIONS:   100                DELTA F =       0.020 MHz

RANDOM VHF FREQUENCIES:   9                VHF SPACING =  1.500 MHz
RANDOM UHF FREQUENCIES:   9                UHF SPACING =  1.500 MHz

VHF EMERGENCY = 121.500 MHz                UHF EMERGENCY = 243.000 MHz
VOR FREQUENCY =   0.000 MHz                FM BROADCAST =    0.000 MHz
(forced bandwidth 25 kHz)                    (forced bandwidth 75 kHz)
                     (Frequency of zero means not tested for)

INTERMODULATION PRODUCTS TESTED:  2f - f'
                                  2f + f'
                                  f - f'
                                  f + f'
                                  2f
                                  3f

==============================================================================

FREQUENCY CONFLICTS:
     NUMBER OF POSSIBLE CONFLICTS:  31200.
     MEAN CONFLICTS PER ITERATION:    3.6
     STANDARD DEVIATION:              2.0

==============================================================================

CONFLICT DISTRIBUTION FOLLOWS


FREQUENCY CONFLICT DISTRIBUTION - HITS vs. TIMES (NUMBER OF ITERATIONS)

( 9 VHF,  9 UHF, delta f =  0.020,   100 iterations)

NUMBER    NUMBER
OF HITS   OF TIMES
==============================================================================
     0  !      0   !
     1  !      0   !
     2  !     47   !*********************************************
     3  !      8   !********
     4  !     22   !**********************
     5  !      5   !*****
     6  !      8   !********
     7  !      5   !*****
     8  !      3   !***
     9  !      0   !
    10  !      2   !**
    11  !      0   !
    12  !      0   !
    13  !      0   !
==============================================================================
```

RANDOM FREQUENCY INTERMODULATION SIMULATION

NUMBER OF ITERATIONS: 100 DELTA F = 0.020 MHz

RANDOM VHF FREQUENCIES: 12 VHF SPACING = 1.000 MHz
RANDOM UHF FREQUENCIES: 12 UHF SPACING = 1.500 MHz

VHF EMERGENCY = 121.500 MHz UHF EMERGENCY = 243.000 MHz
VOR FREQUENCY = 0.000 MHz FM BROADCAST = 0.000 MHz
(forced bandwidth 25 kHz) (forced bandwidth 75 kHz)
(Frequency of zero means not tested for)

INTERMODULATION PRODUCTS TESTED: 2f - f'
2f + f'
f - f'
f + f'
2f
3f

FREQUENCY CONFLICTS:
NUMBER OF POSSIBLE CONFLICTS: 68952.
MEAN CONFLICTS PER ITERATION: 5.5
STANDARD DEVIATION: 3.3

CONFLICT DISTRIBUTION FOLLOWS

FREQUENCY CONFLICT DISTRIBUTION - HITS vs. TIMES (NUMBER OF ITERATIONS)

(12 VHF, 12 UHF, delta f = 0.020, 100 iterations)

NUMBER OF HITS	NUMBER OF TIMES	
0	0	
1	0	
2	24	**********
3	4	****
4	24	**********
5	4	****
6	15	**********
7	5	*****
8	11	**********
9	2	**
10	3	***
11	1	*
12	3	***
13	0	
14	0	
15	2	**
16	2	**
17	0	
18	0	
19	0	

RANDOM FREQUENCY INTERMODULATION SIMULATION

NUMBER OF ITERATIONS: 100 DELTA F = 0.010 MHz

RANDOM VHF FREQUENCIES: 3 VHF SPACING = 1.500 MHz
RANDOM UHF FREQUENCIES: 3 UHF SPACING = 1.500 MHz

VHF EMERGENCY = 121.500 MHz UHF EMERGENCY = 243.000 MHz
VOR FREQUENCY = 0.000 MHz FM BROADCAST = 0.000 MHz
(forced bandwidth 25 kHz) (forced bandwidth 75 kHz)
(Frequency of zero means not tested for)

INTERMODULATION PRODUCTS TESTED: 2f - f'
2f + f'
f - f'
f + f'
2f
3f

FREQUENCY CONFLICTS:
NUMBER OF POSSIBLE CONFLICTS: 1920.
MEAN CONFLICTS PER ITERATION: 2.2
STANDARD DEVIATION: 0.9

CONFLICT DISTRIBUTION FOLLOWS

FREQUENCY CONFLICT DISTRIBUTION - HITS vs. TIMES (NUMBER OF ITERATIONS)

(3 VHF, 3 UHF, delta f = 0.010, 100 iterations)

NUMBER OF HITS	NUMBER OF TIMES	
0	0	
1	0	
2	95	*********
3	1	
4	2	
5	0	
6	0	
7	0	
8	2	
9	0	
10	0	
11	0	

RANDOM FREQUENCY INTERMODULATION SIMULATION

NUMBER OF ITERATIONS: 100 DELTA F = 0.010 MHz

RANDOM VHF FREQUENCIES: 6 VHF SPACING = 1.500 MHz
RANDOM UHF FREQUENCIES: 6 UHF SPACING = 1.500 MHz

VHF EMERGENCY = 121.500 MHz UHF EMERGENCY = 243.000 MHz
VOR FREQUENCY = 0.000 MHz FM BROADCAST = 0.000 MHz
(forced bandwidth 25 kHz) (forced bandwidth 75 kHz)
(Frequency of zero means not tested for)

INTERMODULATION PRODUCTS TESTED: 2f - f'
2f + f'
f - f'
f + f'
2f
3f

FREQUENCY CONFLICTS:
NUMBER OF POSSIBLE CONFLICTS: 10584.
MEAN CONFLICTS PER ITERATION: 2.5
STANDARD DEVIATION: 1.1

CONFLICT DISTRIBUTION FOLLOWS

FREQUENCY CONFLICT DISTRIBUTION - HITS vs. TIMES (NUMBER OF ITERATIONS)

(6 VHF, 6 UHF, delta f = 0.010, 100 iterations)

NUMBER OF HITS	NUMBER OF TIMES	
0	0	
1	0	
2	81	********
3	2	
4	13	*
5	0	
6	3	
7	0	
8	0	
9	1	
10	0	
11	0	
12	0	

```
                    RANDOM FREQUENCY INTERMODULATION SIMULATION
                    ===========================================

NUMBER OF ITERATIONS:   100                DELTA F =       0.010 MHz

RANDOM VHF FREQUENCIES:   9                VHF SPACING =  1.500 MHz
RANDOM UHF FREQUENCIES:   9                UHF SPACING =  1.500 MHz

VHF EMERGENCY = 121.500 MHz                UHF EMERGENCY = 243.000 MHz
VOR FREQUENCY =   0.000 MHz                FM BROADCAST =    0.000 MHz
(forced bandwidth 25 kHz)                    (forced bandwidth 75 kHz)
                      (Frequency of zero means not tested for)

INTERMODULATION PRODUCTS TESTED:  2f - f'
                                  2f + f'
                                  f - f'
                                  f + f'
                                  2f
                                  3f

==============================================================================

FREQUENCY CONFLICTS:
     NUMBER OF POSSIBLE CONFLICTS:  31200.
     MEAN CONFLICTS PER ITERATION:    4.1
     STANDARD DEVIATION:              2.6

==============================================================================

CONFLICT DISTRIBUTION FOLLOWS


FREQUENCY CONFLICT DISTRIBUTION - HITS vs. TIMES (NUMBER OF ITERATIONS)

( 9 VHF,  9 UHF, delta f =  0.010,   100 iterations)

NUMBER    NUMBER
OF HITS   OF TIMES
==============================================================================
     0  !      0   !
     1  !      0   !
     2  !     46   !*********************************************
     3  !      4   !****
     4  !     22   !**********************
     5  !      3   !***
     6  !     10   !**********
     7  !      2   !**
     8  !      5   !*****
     9  !      1   !*
    10  !      4   !****
    11  !      0   !
    12  !      3   !***
    13  !      0   !
    14  !      0   !
    15  !      0   !
==============================================================================
```

RANDOM FREQUENCY INTERMODULATION SIMULATION

NUMBER OF ITERATIONS: 100 DELTA F = 0.010 MHz

RANDOM VHF FREQUENCIES: 12 VHF SPACING = 1.000 MHz
RANDOM UHF FREQUENCIES: 12 UHF SPACING = 1.500 MHz

VHF EMERGENCY = 121.500 MHz UHF EMERGENCY = 243.000 MHz
VOR FREQUENCY = 0.000 MHz FM BROADCAST = 0.000 MHz
(forced bandwidth 25 kHz) (forced bandwidth 75 kHz)
(Frequency of zero means not tested for)

INTERMODULATION PRODUCTS TESTED: 2f - f′
2f + f′
f - f′
f + f′
2f
3f

FREQUENCY CONFLICTS:
NUMBER OF POSSIBLE CONFLICTS: 68952.
MEAN CONFLICTS PER ITERATION: 5.6
STANDARD DEVIATION: 3.2

CONFLICT DISTRIBUTION FOLLOWS

FREQUENCY CONFLICT DISTRIBUTION - HITS vs. TIMES (NUMBER OF ITERATIONS)

(12 VHF, 12 UHF, delta f = 0.010, 100 iterations)

NUMBER OF HITS	NUMBER OF TIMES	
0	0	
1	0	
2	22	**********
3	1	*
4	22	**********
5	6	******
6	20	**********
7	6	******
8	7	*******
9	4	****
10	6	******
11	1	*
12	1	*
13	0	
14	1	*
15	2	**
16	0	
17	1	*
18	0	
19	0	
20	0	

```
                    RANDOM FREQUENCY INTERMODULATION SIMULATION
                    ===========================================

NUMBER OF ITERATIONS:   100              DELTA F =       0.050 MHz

RANDOM VHF FREQUENCIES:   6              VHF SPACING =  1.500 MHz
RANDOM UHF FREQUENCIES:   6              UHF SPACING =  1.500 MHz

VHF EMERGENCY = 121.500 MHz              UHF EMERGENCY = 243.000 MHz
VOR FREQUENCY = 114.500 MHz              FM BROADCAST =  102.300 MHz
(forced bandwidth 25 kHz)                  (forced bandwidth +/-  25 kHz)
                     (Frequency of zero means not tested for)

INTERMODULATION PRODUCTS TESTED:  2f - f'
                                  2f + f'
                                  f - f'
                                  f + f'
                                  2f
                                  3f

==============================================================================

FREQUENCY CONFLICTS:
     NUMBER OF POSSIBLE CONFLICTS:  15872.
     MEAN CONFLICTS PER ITERATION:    4.4
     STANDARD DEVIATION:              2.5

==============================================================================

CONFLICT DISTRIBUTION FOLLOWS
```

FREQUENCY CONFLICT DISTRIBUTION - HITS vs. TIMES (NUMBER OF ITERATIONS)

(6 VHF, 6 UHF, delta f = 0.050, 100 iterations)

NUMBER OF HITS	NUMBER OF TIMES	
0	0	
1	0	
2	32	**********
3	9	*********
4	22	**********
5	8	********
6	11	**********
7	2	**
8	11	**********
9	2	**
10	0	
11	0	
12	3	***
13	0	
14	0	
15	0	
16	0	
17	0	
18	0	
19	0	
20	0	
21	0	
22	0	
23	0	
24	0	
25	0	
26	0	
27	0	
28	0	
29	0	
30	0	
31	0	
32	0	
33	0	
34	0	
35	0	
36	0	
37	0	
38	0	
39	0	
40	0	
41	0	
42	0	
43	0	
44	0	
45	0	
46	0	
47	0	
48	0	
49	0	
50	0	

```
                    RANDOM FREQUENCY INTERMODULATION SIMULATION
                    ===========================================

NUMBER OF ITERATIONS:   100              DELTA F =       0.100 MHz

RANDOM VHF FREQUENCIES:  12              VHF SPACING =  1.000 MHz
RANDOM UHF FREQUENCIES:  12              UHF SPACING =  1.500 MHz

VHF EMERGENCY = 121.500 MHz              UHF EMERGENCY = 243.000 MHz
VOR FREQUENCY = 114.500 MHz              FM BROADCAST =  102.300 MHz
(forced bandwidth 25 kHz)                  (forced bandwidth +/-  25 kHz)
                     (Frequency of zero means not tested for)

INTERMODULATION PRODUCTS TESTED:  2f - f'
                                  2f + f'
                                  f - f'
                                  f + f'
                                  2f
                                  3f

==========================================================================

FREQUENCY CONFLICTS:
     NUMBER OF POSSIBLE CONFLICTS:  86240.
     MEAN CONFLICTS PER ITERATION:   34.5
     STANDARD DEVIATION:              9.3

==========================================================================

CONFLICT DISTRIBUTION FOLLOWS
```

FREQUENCY CONFLICT DISTRIBUTION - HITS vs. TIMES (NUMBER OF ITERATIONS)

(12 VHF, 12 UHF, delta f = 0.100, 100 iterations)

NUMBER OF HITS	NUMBER OF TIMES	
0	0	
1	0	
2	0	
3	0	
4	0	
5	0	
6	0	
7	0	
8	0	
9	0	
10	0	
11	0	
12	0	
13	0	
14	1	*
15	0	
16	0	
17	1	*
18	1	*
19	2	**
20	2	**
21	0	
22	1	*
23	4	****
24	4	****
25	1	*
26	3	***
27	3	***
28	4	****
29	4	****
30	4	****
31	3	***
32	3	***
33	3	***
34	5	*****
35	5	*****
36	4	****
37	5	*****
38	6	******
39	4	****
40	4	****
41	4	****
42	6	******
43	2	**
44	2	**
45	0	
46	1	*
47	1	*
48	0	
49	1	*
50	0	
51	1	*
52	1	*
53	0	
54	0	
55	0	
56	0	
57	1	*
58	2	**
59	0	
60	0	
61	0	
62	0	
63	0	
64	0	
65	1	*
66	0	
67	0	
68	0	

```
                    RANDOM FREQUENCY INTERMODULATION SIMULATION
                    ===========================================

NUMBER OF ITERATIONS:   100              DELTA F =       0.050 MHz

RANDOM VHF FREQUENCIES:   3              VHF SPACING =  1.500 MHz
RANDOM UHF FREQUENCIES:   3              UHF SPACING =  1.500 MHz

VHF EMERGENCY = 121.500 MHz              UHF EMERGENCY = 243.000 MHz
VOR FREQUENCY = 114.500 MHz              FM BROADCAST =  102.300 MHz
(forced bandwidth 25 kHz)                  (forced bandwidth +/-  25 kHz)
                     (Frequency of zero means not tested for)

INTERMODULATION PRODUCTS TESTED:  2f - f'
                                  2f + f'
                                  f - f'
                                  f + f'
                                  2f
                                  3f

==============================================================================

FREQUENCY CONFLICTS:
     NUMBER OF POSSIBLE CONFLICTS:   3800.
     MEAN CONFLICTS PER ITERATION:    2.6
     STANDARD DEVIATION:              1.3

==============================================================================

CONFLICT DISTRIBUTION FOLLOWS
```

FREQUENCY CONFLICT DISTRIBUTION - HITS vs. TIMES (NUMBER OF ITERATIONS)

(3 VHF, 3 UHF, delta f = 0.050, 100 iterations)

NUMBER OF HITS	NUMBER OF TIMES	
0	0	
1	0	
2	79	*******
3	5	
4	9	
5	0	
6	4	
7	0	
8	3	
9	0	
10	0	
11	0	
12	0	
13	0	
14	0	
15	0	
16	0	
17	0	
18	0	
19	0	
20	0	
21	0	
22	0	
23	0	
24	0	
25	0	
26	0	
27	0	
28	0	
29	0	
30	0	
31	0	
32	0	
33	0	
34	0	
35	0	
36	0	
37	0	
38	0	
39	0	
40	0	
41	0	
42	0	
43	0	
44	0	
45	0	
46	0	
47	0	
48	0	
49	0	
50	0	
51	0	
52	0	
53	0	

```
                    RANDOM FREQUENCY INTERMODULATION SIMULATION
                    ===========================================

NUMBER OF ITERATIONS:   100              DELTA F =       0.100 MHz

RANDOM VHF FREQUENCIES:   9              VHF SPACING =  1.500 MHz
RANDOM UHF FREQUENCIES:   9              UHF SPACING =  1.500 MHz


VHF EMERGENCY = 121.500 MHz              UHF EMERGENCY = 243.000 MHz
VOR FREQUENCY = 114.500 MHz              FM BROADCAST =  102.300 MHz
(forced bandwidth 25 kHz)                  (forced bandwidth +/-  25 kHz)
                     (Frequency of zero means not tested for)

INTERMODULATION PRODUCTS TESTED:  2f - f'
                                  2f + f'
                                  f - f'
                                  f + f'
                                  2f
                                  3f

==============================================================================

FREQUENCY CONFLICTS:
     NUMBER OF POSSIBLE CONFLICTS:  41624.
     MEAN CONFLICTS PER ITERATION:   18.1
     STANDARD DEVIATION:              5.9

==============================================================================

CONFLICT DISTRIBUTION FOLLOWS
```

FREQUENCY CONFLICT DISTRIBUTION - HITS vs. TIMES (NUMBER OF ITERATIONS)

(9 VHF, 9 UHF, delta f = 0.100, 100 iterations)

NUMBER OF HITS	NUMBER OF TIMES	
0	0	
1	0	
2	0	
3	0	
4	0	
5	0	
6	0	
7	1	*
8	2	**
9	1	*
10	11	**********
11	2	**
12	4	****
13	1	*
14	9	*********
15	5	*****
16	3	***
17	7	*******
18	8	********
19	6	******
20	6	******
21	3	***
22	9	*********
23	3	***
24	4	****
25	3	***
26	5	*****
27	2	**
28	1	*
29	0	
30	2	**
31	0	
32	1	*
33	1	*
34	0	
35	0	
36	0	
37	0	
38	0	
39	0	
40	0	
41	0	
42	0	
43	0	
44	0	
45	0	
46	0	
47	0	
48	0	
49	0	
50	0	
51	0	
52	0	
53	0	
54	0	
55	0	
56	0	
57	0	
58	0	
59	0	
60	0	
61	0	
62	0	
63	0	
64	0	
65	0	
66	0	
67	0	
68	0	
69	0	
70	0	
71	0	

```
                    RANDOM FREQUENCY INTERMODULATION SIMULATION
                    ===========================================

NUMBER OF ITERATIONS:   100              DELTA F =       0.100 MHz

RANDOM VHF FREQUENCIES:   6              VHF SPACING =  1.500 MHz
RANDOM UHF FREQUENCIES:   6              UHF SPACING =  1.500 MHz

VHF EMERGENCY = 121.500 MHz              UHF EMERGENCY = 243.000 MHz
VOR FREQUENCY = 114.500 MHz              FM BROADCAST =  102.300 MHz
(forced bandwidth 25 kHz)                  (forced bandwidth +/-  25 kHz)
                      (Frequency of zero means not tested for)

INTERMODULATION PRODUCTS TESTED:  2f - f'
                                  2f + f'
                                  f - f'
                                  f + f'
                                  2f
                                  3f

==============================================================================

FREQUENCY CONFLICTS:
     NUMBER OF POSSIBLE CONFLICTS:  15872.
     MEAN CONFLICTS PER ITERATION:    8.0
     STANDARD DEVIATION:              4.4

==============================================================================

CONFLICT DISTRIBUTION FOLLOWS
```

FREQUENCY CONFLICT DISTRIBUTION - HITS vs. TIMES (NUMBER OF ITERATIONS)

(6 VHF, 6 UHF, delta f = 0.100, 100 iterations)

NUMBER OF HITS	NUMBER OF TIMES	
0	0	
1	0	
2	5	*****
3	6	******
4	17	**********
5	5	*****
6	13	**********
7	10	**********
8	4	****
9	7	*******
10	6	******
11	5	*****
12	6	******
13	3	***
14	1	*
15	6	******
16	2	**
17	2	**
18	0	
19	0	
20	1	*
21	0	
22	1	*
23	0	
24	0	
25	0	
26	0	
27	0	
28	0	
29	0	
30	0	
31	0	
32	0	
33	0	
34	0	
35	0	
36	0	
37	0	
38	0	
39	0	
40	0	
41	0	
42	0	
43	0	
44	0	
45	0	
46	0	
47	0	
48	0	
49	0	
50	0	
51	0	
52	0	
53	0	
54	0	
55	0	
56	0	
57	0	
58	0	
59	0	
60	0	
61	0	
62	0	
63	0	
64	0	
65	0	
66	0	
67	0	
68	0	
69	0	
70	0	
71	0	
72	0	
73	0	
74	0	

```
                    RANDOM FREQUENCY INTERMODULATION SIMULATION
                    ===========================================

NUMBER OF ITERATIONS:   100              DELTA F =       0.100 MHz

RANDOM VHF FREQUENCIES:   3              VHF SPACING =  1.500 MHz
RANDOM UHF FREQUENCIES:   3              UHF SPACING =  1.500 MHz

VHF EMERGENCY = 121.500 MHz              UHF EMERGENCY = 243.000 MHz
VOR FREQUENCY = 114.500 MHz              FM BROADCAST =  102.300 MHz
(forced bandwidth 25 kHz)                  (forced bandwidth +/-  25 kHz)
                      (Frequency of zero means not tested for)

INTERMODULATION PRODUCTS TESTED:  2f - f'
                                  2f + f'
                                  f - f'
                                  f + f'
                                  2f
                                  3f

==============================================================================

FREQUENCY CONFLICTS:
     NUMBER OF POSSIBLE CONFLICTS:   3800.
     MEAN CONFLICTS PER ITERATION:    3.2
     STANDARD DEVIATION:              2.0

==============================================================================

CONFLICT DISTRIBUTION FOLLOWS


 FREQUENCY CONFLICT DISTRIBUTION - HITS vs. TIMES (NUMBER OF ITERATIONS)

 ( 3 VHF,  3 UHF, delta f =  0.100,   100 iterations)

 NUMBER    NUMBER
 OF HITS   OF TIMES
 ==============================================================================
      0  :      0   :
      1  :      0   :
      2  :     57   :*****
```

```
                    RANDOM FREQUENCY INTERMODULATION SIMULATION
                    ===========================================

NUMBER OF ITERATIONS: 10000                DELTA F =       0.100 MHz

RANDOM VHF FREQUENCIES:  12                VHF SPACING =  1.000 MHz
RANDOM UHF FREQUENCIES:  12                UHF SPACING =  1.500 MHz

VHF EMERGENCY = 121.500 MHz                UHF EMERGENCY = 243.000 MHz
VOR FREQUENCY =   0.000 MHz                FM BROADCAST =    0.000 MHz
(forced bandwidth 25 kHz)                    (forced bandwidth +/-   0 kHz)
                      (Frequency of zero means not tested for)

INTERMODULATION PRODUCTS TESTED:  2f - f'
                                  2f + f'
                                  f - f'
                                  f + f'
                                  2f
                                  3f

=====================================================================

FREQUENCY CONFLICTS:
     NUMBER OF POSSIBLE CONFLICTS:  68952.
     MEAN CONFLICTS PER ITERATION:   27.6
     STANDARD DEVIATION:              8.8

=====================================================================

CONFLICT DISTRIBUTION FOLLOWS
```

FREQUENCY CONFLICT DISTRIBUTION - HITS vs. TIMES (NUMBER OF ITERATIONS)

(12 VHF, 12 UHF, delta f = 0.100, 10000 iterations)

NUMBER OF HITS	NUMBER OF TIMES	
0	0	
1	0	
2	0	
3	0	
4	1	
5	2	
6	5	
7	10	
8	24	
9	29	
10	44	
11	44	
12	89	
13	114	*
14	163	*
15	161	*
16	208	**
17	261	**
18	340	***
19	314	***
20	373	***
21	372	***
22	441	****
23	420	****
24	459	****
25	437	****
26	536	*****
27	454	****
28	443	****
29	422	****
30	420	****
31	373	***
32	383	***
33	315	***
34	304	***
35	272	**
36	234	**
37	209	**
38	191	*
39	191	*
40	137	*
41	129	*
42	99	
43	96	
44	84	
45	80	
46	57	
47	49	
48	33	
49	34	
50	28	
51	24	
52	25	
53	9	
54	17	
55	2	
56	8	
57	6	
58	7	
59	0	
60	6	
61	1	
62	2	
63	4	
64	1	
65	1	
66	1	
67	1	
68	0	
69	0	
70	0	
71	0	
72	0	

73	0	
74	0	
75	0	
76	0	
77	1	
78	0	
79	0	
80	0	