REPRODUCTION COPY

ES-86-3

U.S. Department of Transportation
Federal Aviation Administration

SYSTEMS ENGINEERING SERVICE

DEPARTURE FLOW MANAGEMENT NEW YORK TEST PLAN

APRIL 1986

87-1090

AES-320

APRIL 1986

FAA/AES-320
Report ES-86-3

DEPARTURE FLOW MANAGEMENT
NEW YORK TEST PLAN

Contract No. DTFA01-84-Y-01002
Task II Interim Report

by

Jeffrey R. Olmstead

ATAC
1200 Villa Street
Mountain View, CA 94041
415-965-8801

ACKNOWLEDGMENT

New York ATC facilities participated in the preparation and review of this test plan document. Appreciation for their many ideas and keen interest is extended to the representatives of NY ARTCC, NY TRACON, Kennedy, Newark, La Guardia, Westchester, Long Island, and Teterboro Towers.

CONTENTS

1.0 DFM TESTBED OVERVIEW 4

1.1 PURPOSE OF THE NEW YORK TESTS 4
1.2 DFM TESTBED 5
1.3 SCHEDULE 7
1.4 HOW DFM WORKS 8

2.0 TOWER DFM 11

2.1 TOWER EQUIPMENT 11
2.2 TOWER OPERATIONS 21
2.2.1 Position DFM-1 21
2.2.2 Position DFM-2 29
2.3 TOWER TRAINING 33

3.0 TRACON DFM 34

3.1 TRACON EQUIPMENT 34
3.2 TRACON OPERATIONS 34
3.3 TRACON TRAINING 34

4.0 CENTER DFM 38

4.1 CENTER EQUIPMENT 38
4.2 CENTER OPERATIONS 38
4.3 CENTER TRAINING 44

5.0 DFM TESTS 45

5.1 OPERATIONAL TEST PHASE 46
5.2 EVALUATION TEST PHASE 50

TABLES AND FIGURES

Figure 1-1 DFM TESTBED CONFIGURATION 6
Table 1-2 DFM TEST SCHEDULE 7
Figure 1-3 DEPARTURE METERING FIXES 9
Figure 2-1 TOWER DFM EQUIPMENT DIAGRAM 11
Table 2-2 LIST OF TOWER EQUIPMENT 12
Figure 2-3 PLANS FOR COMPUTER STAND 14
Figure 2-4 PLACEMENT OF EQUIPMENT AT EWR 15
Figure 2-5 PLACEMENT OF EQUIPMENT AT LGA 16
Figure 2-6 PLACEMENT OF EQUIPMENT AT JFK 17
Figure 2-7 PLACEMENT OF EQUIPMENT AT HPN 18
Figure 2-8 PLACEMENT OF EQUIPMENT AT TEB 19
Figure 2-9 PLACEMENT OF EQUIPMENT AT ISP 20
Table 2-10 DFM-1 FUNCTIONS 23
Figure 2-11 DFM-1 MAIN SCREEN (F2) 23
Figure 2-12 DFM-1 KEYBOARD FUNCTION KEYS 23
Table 2-13 DFM-1 KEYBOARD DATA ENTRY 25
Figure 2-14 CHANGE FLIGHT DATA, DFM-1 SCREEN (F4) 25
Figure 2-15 CHANGE AIRPORT DATA, DFM-1 SCREEN (F6) 26
Figure 2-16 OVERRIDE SEQUENCE, DFM-1 SCREEN (F8) 27
Figure 2-17 ADD VFR DATA, DFM-1 SCREEN (F10) 28
Table 2-18 DFM-2 FUNCTIONS 30
Figure 2-19 DFM-2 SCREEN 31
Figure 2-20 DFM-2 JOYSTICK 31
Table 2-21 DFM-2 JOYSTICK DATA ENTRY 32
Figure 3-1 TRACON DFM EQUIPMENT DIAGRAM 35
Table 3-2 LIST OF TRACON EQUIPMENT 35
Figure 3-3 PLACEMENT OF TRACON EQUIPMENT 36
Figure 3-4 TRACON MAIN SCREEN 37
Figure 3-5 TRACON KEYBOARD FUNCTION KEYS 37
Figure 4-1 CENTER DFM EQUIPMENT DIAGRAM 39
Table 4-2 LIST OF CENTER EQUIPMENT 39
Figure 4-3 PLACEMENT OF CENTER EQUIPMENT 40
Figure 4-4 FIX MONITOR DISPLAY 41
Figure 4-5 FLOW FORECAST DISPLAY 41
Figure 4-6 SEQUENCE OVERRIDE DISPLAY 42
Figure 4-7 DELAY HISTORY DISPLAY 42
Figure 4-8 DATABASE MANAGEMENT FUNCTION 43

Table 5-1 TEST STARTUP 45
Table 5-2 OPERATIONAL TEST SCHEDULE 47
Table 5-3 SOME OPERATIONAL QUESTIONS 47
Table 5-4 EVALUATION TEST SCHEDULE 50
Table 5-5 EVALUATION QUESTIONS 51

1.0 DFM TESTBED OVERVIEW

The Departure Flow Management (DFM) project is funded by the FAA's System Engineering Service, Advanced Concepts Branch, AES-320. DFM involves the design, development, analysis, test, evaluation, and documentation of a computer automation system to improve the coordination of aircraft departures from multiple airports in a congested metropolitan area. DFM software will calculate departure schedules by using flight plan and ARTS departure messages from the 9020 computer, Center sector departure flow constraints, and flow control restrictions on selected routes and destinations. The concept is that DFM will aid Tower controllers in sequencing and releasing departures. DFM will aid Center controllers in regulating the flow of aircraft in departure sectors. Departure delays will be reduced because the computer will know where departure gaps develop and can fill them. The present system of independent restrictions on each airport will disappear.

1.1 PURPOSE OF THE NEW YORK TESTS

The purpose of the DFM tests is to identify improvements that can be made to the testbed software and then to evaluate the effectiveness of the DFM concept in terms of aiding Tower operations, regulating Center departure flows, and decreasing departure delays. Testing the DFM system in a real operational environment will expose system problems during the research and development stage while the system design requirements can still be changed.

The New York area was intentionally chosen for testing DFM because of the magnitude and complexity of its departure operations. The DFM tests will not, of course, be allowed to impede those departure operations.

During DFM test periods, departures will be released according to a DFM departure schedule. (This is what is meant by testing in a 'real operational environment'). Testing on the 9020 simulator is not practical because input is required from Towers. DFM requires a more complete operational environment than can be simulated at the FAA Technical Center at Atlantic City.

System analysis using a computer model is practical, however, and a model can predict - with some accuracy - how DFM will perform. A computer model has been developed as part of the DFM project. The modeling results show that departure delays are reduced when DFM is used. The DFM computer model can be used to investigate the sensitivity of delay to changes in various parameters - such as flow rates at metering fixes. But the impact of real operations on the DFM system cannot be predicted from a computer model - only testing under real conditions will expose the actual capability of the system.

A important point to keep in mind is that the DFM testbed is not an operational system - it is a research and development system. The DFM tests will help shape and evaluate the DFM concept for the purpose of defining the requirements for an operational system.

1.2 DFM TESTBED

The DFM testbed system will be placed in selected air traffic control facilities in the New York area. The testbed will link microcomputers in six towers and the TRACON to an Apollo computer in the New York Center. The Apollo computer will calculate departure schedules for flights leaving the New York area and transmit these schedules to the microcomputers. The DFM project will provide all DFM required equipment; existing TMU computers will not be used.

Figure 1-1 shows the air traffic control facilities that will participate in the DFM tests and shows the testbed computer equipment in those facilities. Data communications will occur among the following eight facilities:

ZNY - New York ARTCC (Center)
N90 - New York TRACON
EWR - Newark International
LGA - La Guardia
JFK - John F. Kennedy International
HPN - Westchester Co., White Plains
TEB - Teterboro
ISP - Long Island MacArthur, Islip.

Figure 1-1 DFM TESTBED CONFIGURATION

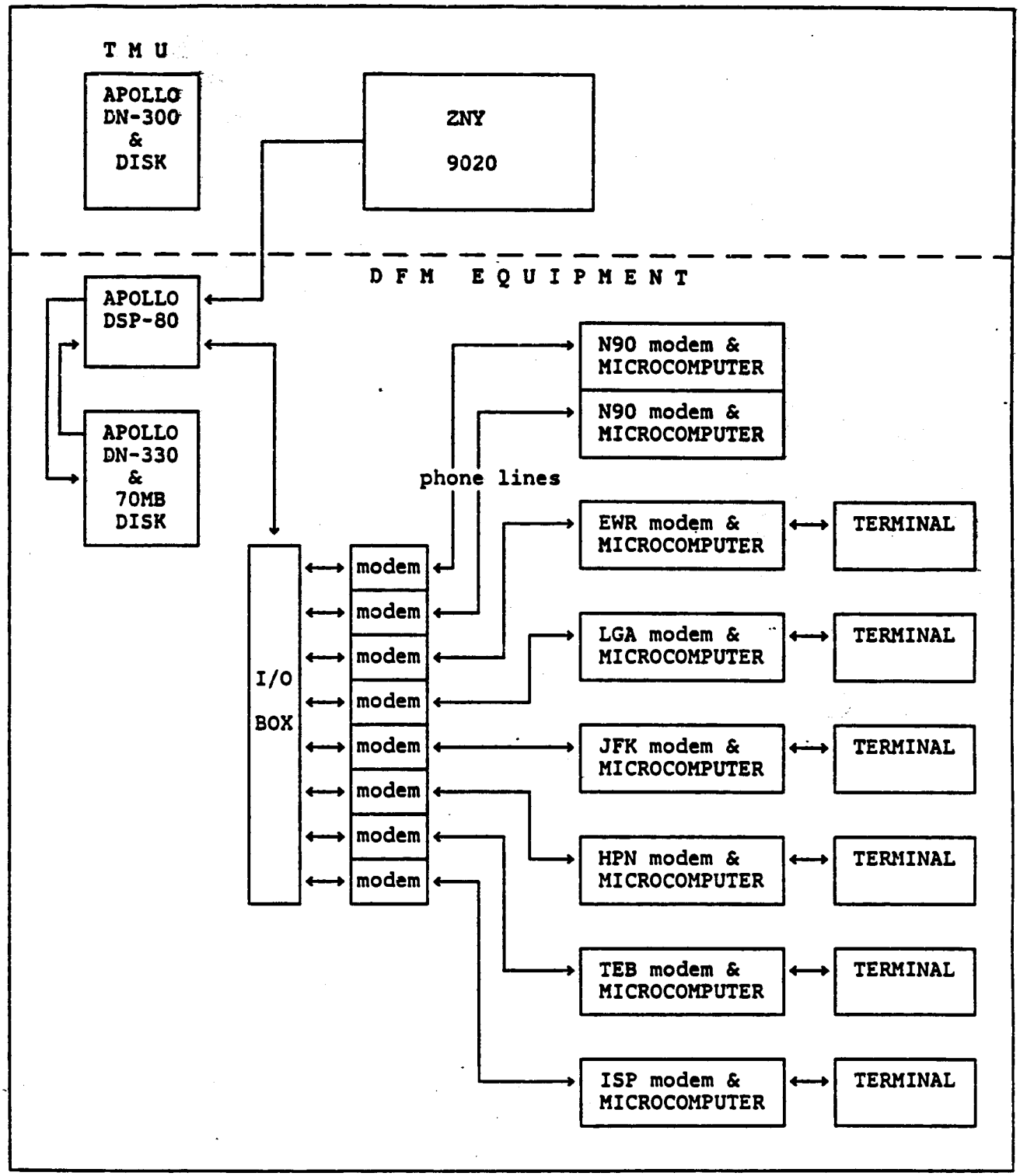

Table 1-2 DFM TEST SCHEDULE

WEEK OF		EVENTS
Apr 7		DFM equipment shipped to ZNY.
Apr 14		Apollo computers delivered to ZNY.
Apr 21	T	Apollos setup. 9020 hookup.
Apr 28		Test Plan (final report). Phone lines installed.
May 5		Micro equipment shipped.
May 12	T	AES briefing. DFM-9020 interface test. AEA briefing.
May 19		Break. Software changes. Micro equipment shipped.
May 26	T	N90 setup. Tower training 5/29. N90 training 5/30.
Jun 2		Break. Software changes. Micro equipment shipped.
Jun 9	T	ISP, LGA, and HPN setup. Tower training 6/12.
Jun 16	T	EWR, TEB, and JFK setup. Tower training 6/19.
Jun 23		Break. Software changes.
Jun 30		Break. Software changes.
Jul 7	T	Operational testing.
Jul 14		Break. Software changes. Analysis.
Jul 21	T	Operational testing.
Jul 28	T	Operational testing.
Aug 4		Break. Analysis.
Aug 11	T	Evaluation testing.
Aug 18		Break. Analysis.
Aug 25	T	Evaluation testing.
Sep 1	T	Evaluation testing.
Sep 8		Break. Analysis.
Sep 15	T	Evaluation testing.
Sep 22		Evaluation testing.
Sep 29		Evaluation testing.
Oct 6	T	Evaluation testing. Final evaluation meeting.
Oct 13		
Oct 20		↑
Oct 27		Analysis and
Nov 3		room for schedule expansion
Nov 10		
Nov 17		↓
Nov 24		
Dec 1	T	DFM Test Results presentation at WDC/NY.

T = ATAC trip

1.3 SCHEDULE

Table 1-2 shows the DFM test schedule. Equipment will be shipped, the 9020 connection to Apollo will be made, and the phone lines will be installed in April. The Center DFM system will be checked out in May. The towers will be brought online in May and June. Operational testing will be in July and evaluation testing in August and September 1986. Details about the training and test schedules are in later sections on the Towers, TRACON, and Center.

1.4 HOW DFM WORKS

Figure 1-3 shows seven primary departure metering fixes (or lines, in some cases) that will be used for the tests. For each metering fix, a list of flights crossing the fix is maintained in the Apollo computer. Also, a list of flights using a particular runway is kept. A flight's departure time (takeoff clearance time) is calculated by searching for a time - at both runway and fix - that does not interfere with other flights already scheduled. The flow rate across the departure metering fixes is controlled at the Center by changing flow-rate parameters in the computer.

The Apollo computer re-calculates departure times for all flights that are not airborne or frozen about once per minute. The computer searches for a departure time starting with the 'earliest departure time', taking into account other flights already scheduled at the runway and departure fix. If there are no delays at the runway or departure fix, then the scheduled departure time will be the 'earliest departure time'.

The 'earliest departure time' is initially estimated by finding the latest of (1) filed/amended P-time plus a nominal non-delayed value for push-back and taxi duration, or (2) assigned EDCT, if there is one. When the Tower sends a 'taxi-start time' to the Apollo computer, then the 'earliest departure time' will be estimated by adding the nominal taxi duration to the taxi-start time.

The time of clearance delivery will be known. If CD-Time is later than filed P-time, then the computer will automatically amend the P-Time to equal CD-Time. If an aircraft taxies before receiving clearance, then CD-Time will be the time the dummy strip is prepared.

The method that DFM uses in searching for departure times involves a 'master sequence list' of all flights departing the six major airports plus flights leaving NY satellite airports. The order of flights on the master list determines the order in which the flights are processed in the Apollo computer.

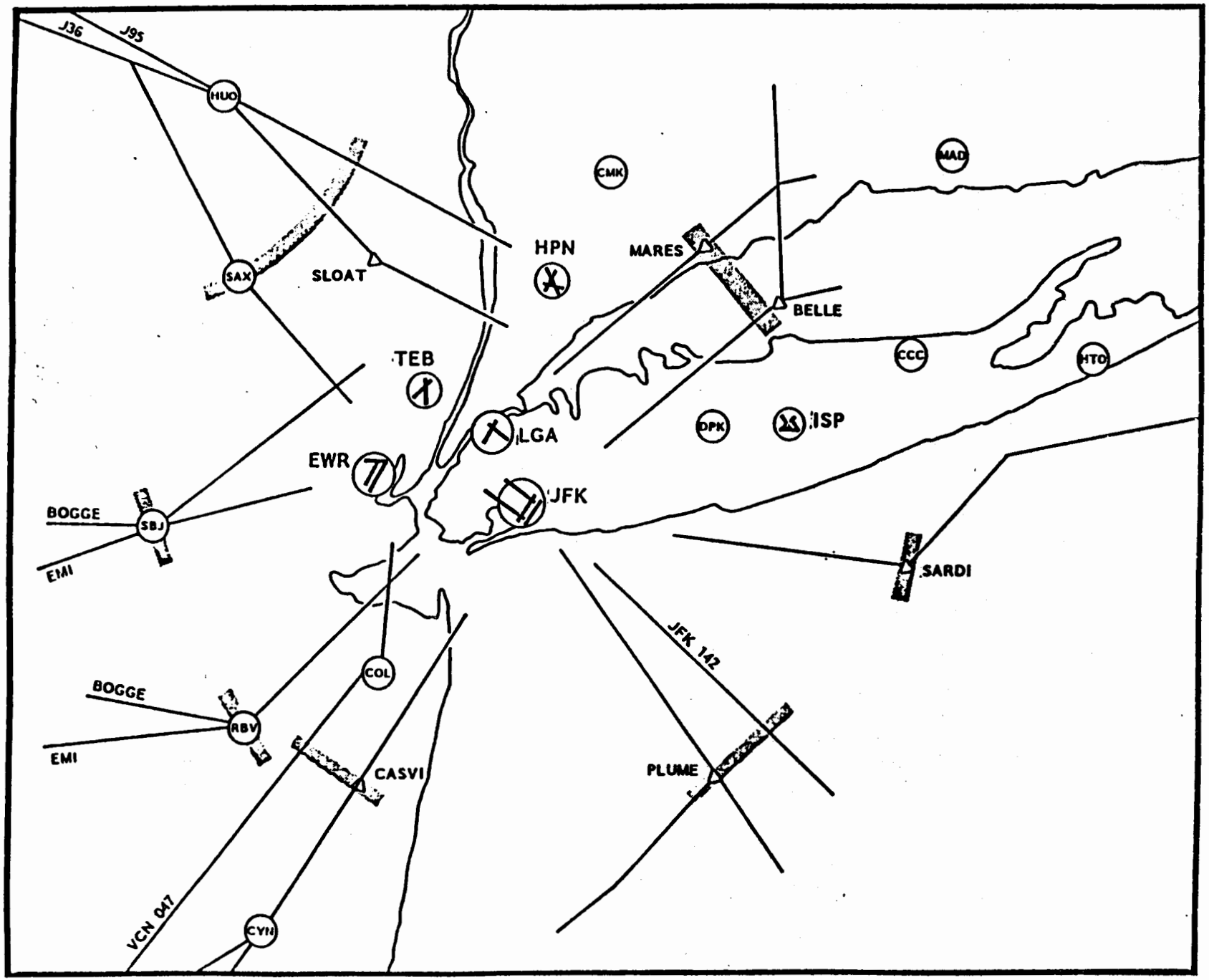

Figure 1-3 DEPARTURE METERING FIXES

The first flight on the master list gets the first chance at a departure time. The first flight will have the best chance of getting its 'earliest departure time' because it competes with only 'frozen' and airborne flights. (A 'frozen' flight is one that is close to departing and has its departure time and over-fix time frozen, meaning the flight is no longer re-scheduled). The next flight processed must compete with the first flight if it uses the same runway or the same departure fix. Departure delays will be larger for flights that are lower on the master list. Flights work their way up the master list as those on the top become 'frozen' and are removed.

The order of flights on the master sequence list is determined by the amended P-Time. Assigned EDCT is not used on the master list - the effect will be that flights delayed by Central Flow Control will be given priority in the DFM scheduling process. The order of flights on the master sequence list can be changed at the Center, TRACON, or Tower.

2.0 TOWER DFM

2.1 TOWER EQUIPMENT

Figure 2-1 shows a diagram of the DFM computer equipment that will be installed in a Tower and Table 2-2 lists the items. Tower DFM equipment will be first shipped to the Center, TRACON, or Eastern Region Office and then brought to each Tower on the day it is scheduled to be setup.

Figure 2-1 TOWER DFM EQUIPMENT DIAGRAM

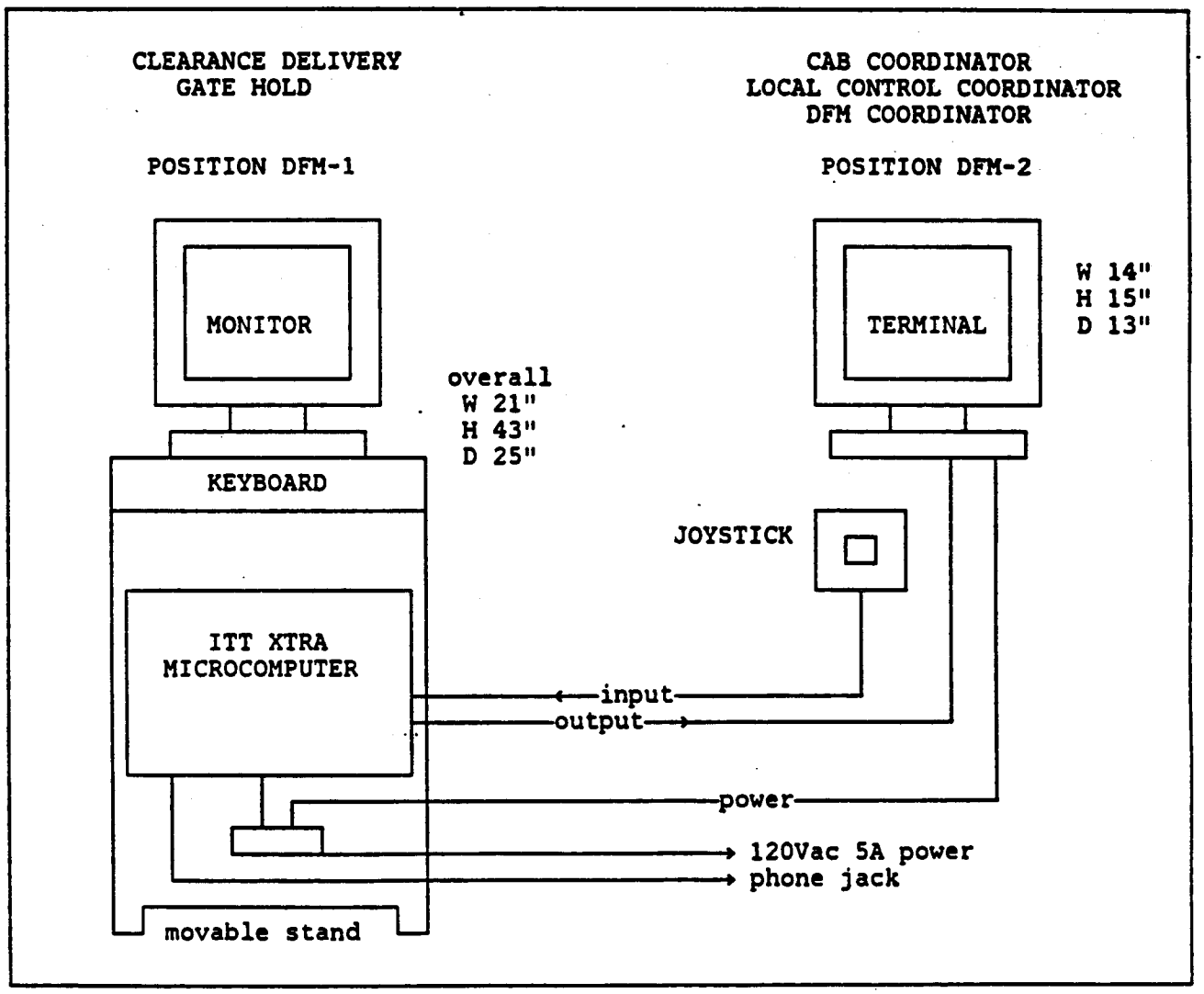

Table 2-2 LIST OF TOWER EQUIPMENT

Movable Computer Stand (see Figure 2-3)
ITT XTRA Microcomputer with:
12-inch Amber Screen Monitor
2 Floppy Disk Drives
640 KB Memory
Serial I/O Port (to terminal)
Game Port (to joystick)
1200-baud Modem (to phone line)
Clock
Joystick (plus 2 buttons)
Qume 101 Amber Screen Computer Terminal
2 Polarizing Contrast Filters
2 Power Extension Cords
Voltage Spike Protector

An ordinary dial-up phone line will be installed prior to equipment setup. Two phone jacks will be put in so that a change of equipment placement can be made easily. The phone charges will be billed to the project, not to the Tower.

On the day that a Tower is scheduled to have the DFM equipment setup, the DFM team (usually composed of an ATAC and FAA representatives) will coordinate with Tower personnel to bring the equipment into the cab. An AF representative should be avialable to designate which power outlet is available and to check on the placement of cables. The DFM team will perform the installation work which will consist of placing the microcomputer in its stand, setting the terminal on a shelf, connecting the cables between the micro and the terminal, connecting the phone line, and plugging the extension cord into a power outlet. There will be no permanent installation, although cables may have to be temporarily secured for safety. The DFM system will operate from one power switch on the computer stand.

There are two data input devices: DFM-1 keyboard on a movable computer stand that will be, in general, used by Clearance Delivery; and DFM-2 joystick that will be used by the Cab Coordinator (Local Control Coordinator). Section 2.2 discussed the DFM operations and variations on the position assignments.

The DFM-1 microcomputer will be on a small movable stand with a fold-down keyboard so that it can be moved out of the way after each test. Figure 2-3 shows the blueprints for the movable stand.

The DFM-2 terminal will be placed in a position such that the Cab Coordinator can see it, usually on top of a cab console against a window where it will not obstruct visibility. If need be, the terminal can be moved after each DFM test. Figures 2-4 through 2-9 show the approximate position of the DFM equipment in the six Towers.

Figure 2-3 PLANS FOR COMPUTER STAND

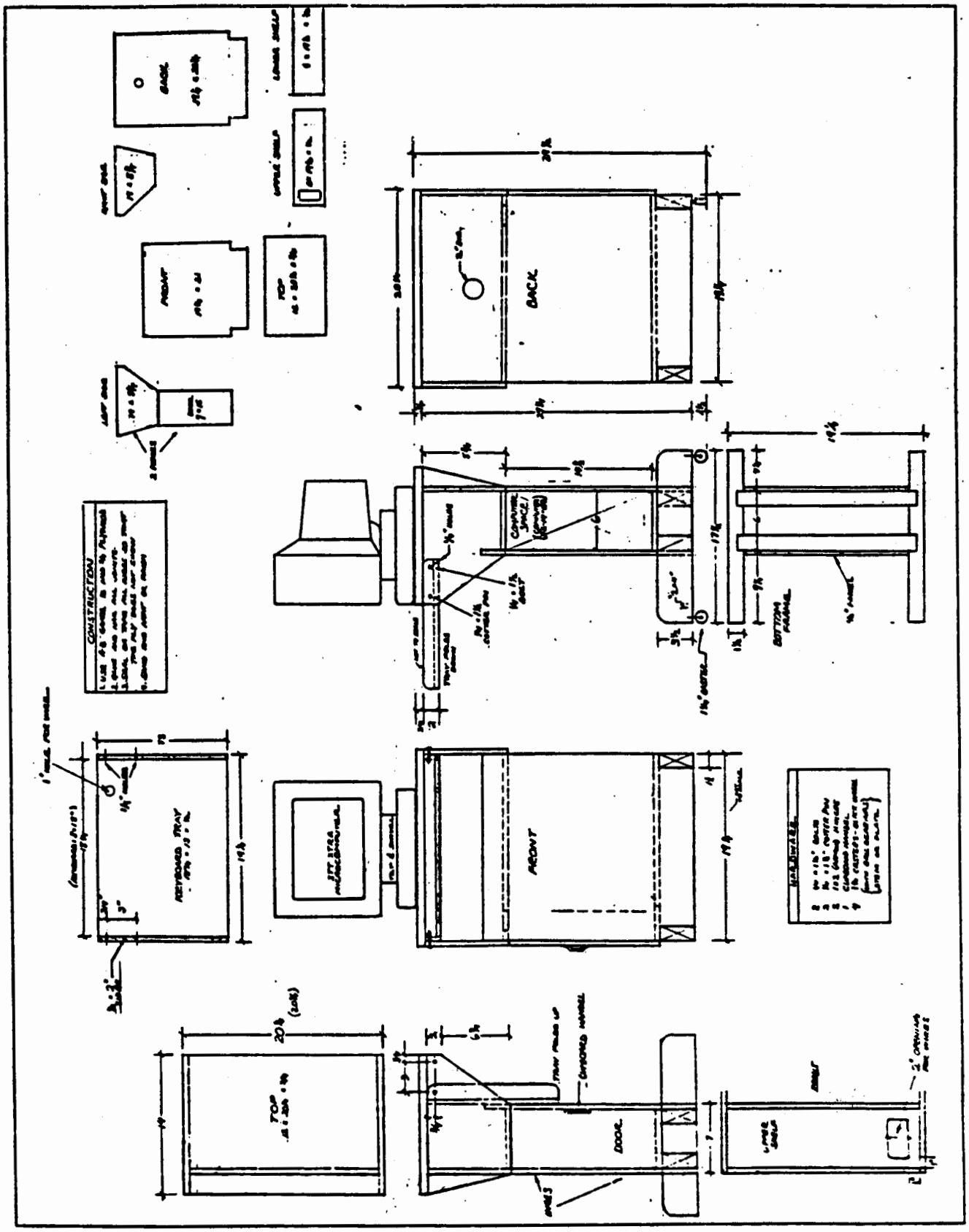

Figure 2-4 PLACEMENT OF EQUIPMENT AT EWR

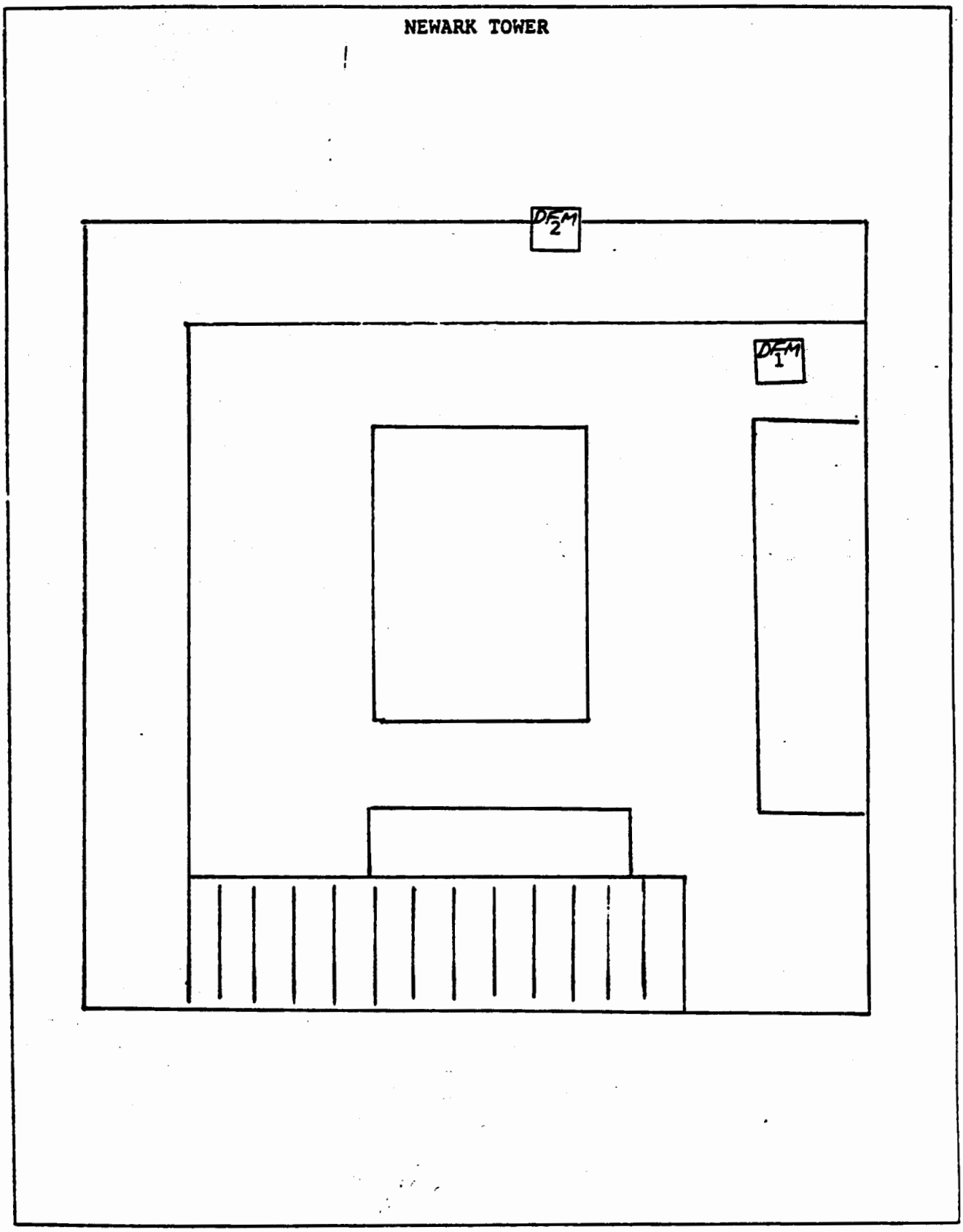

Figure 2-5 PLACEMENT OF EQUIPMENT FOR LGA

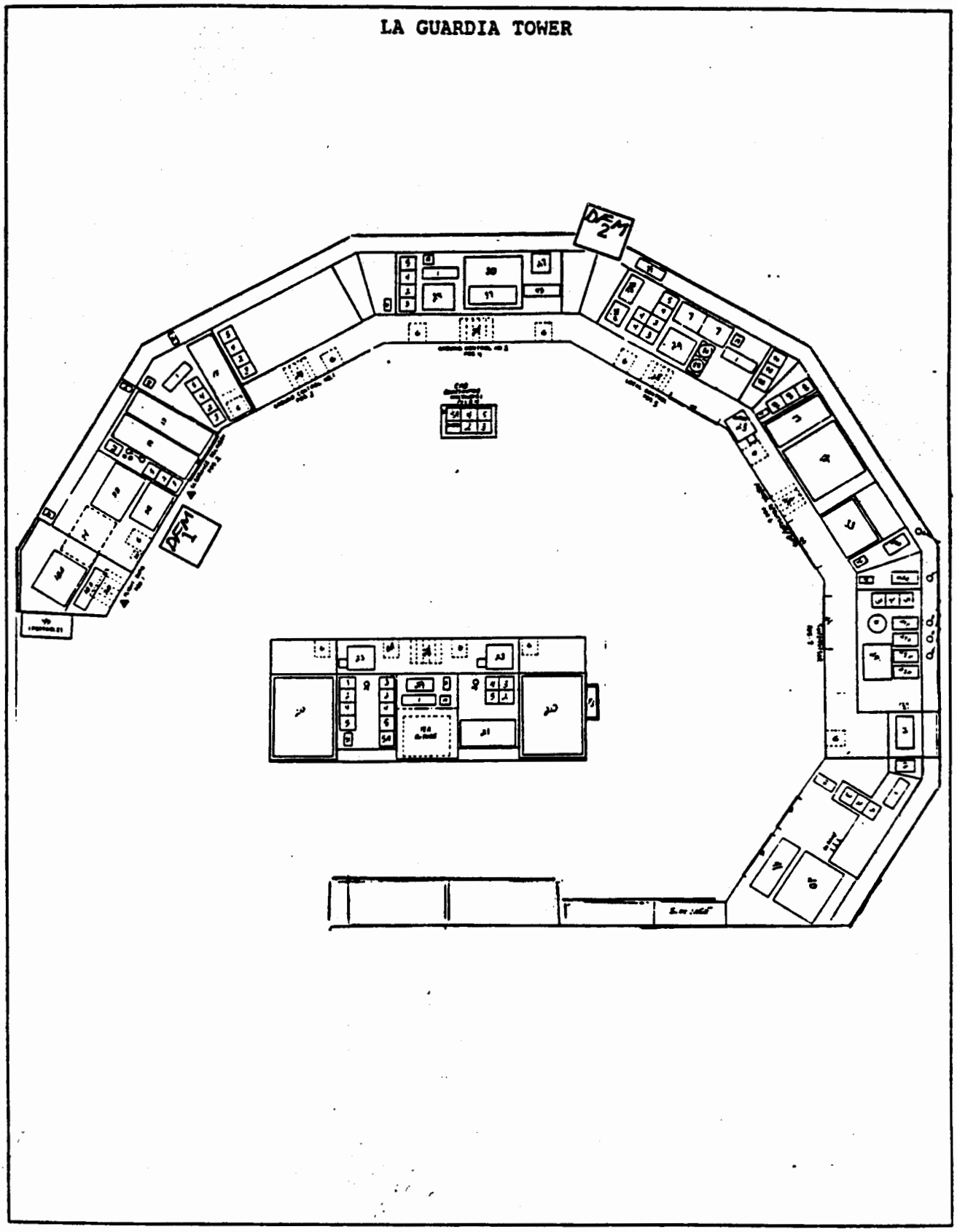

Figure 2-6 PLACEMENT OF EQUIPMENT FOR JFK

KENNEDY TOWER

position DFM-1 will be downstairs
with a comm-line to CD in the cab

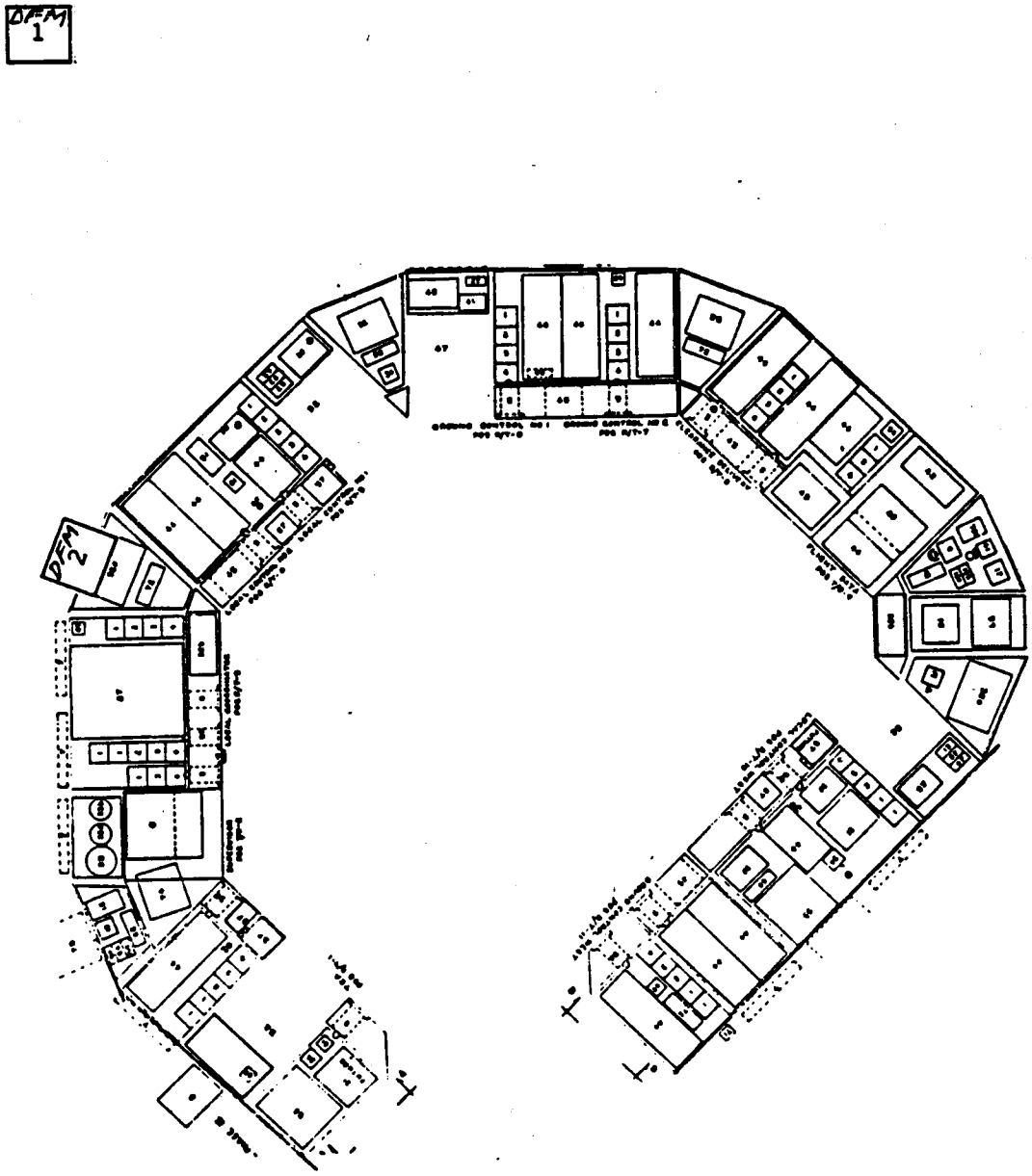

Figure 2-7 PLACEMENT OF EQUIPMENT FOR HPN

WESTCHESTER TOWER

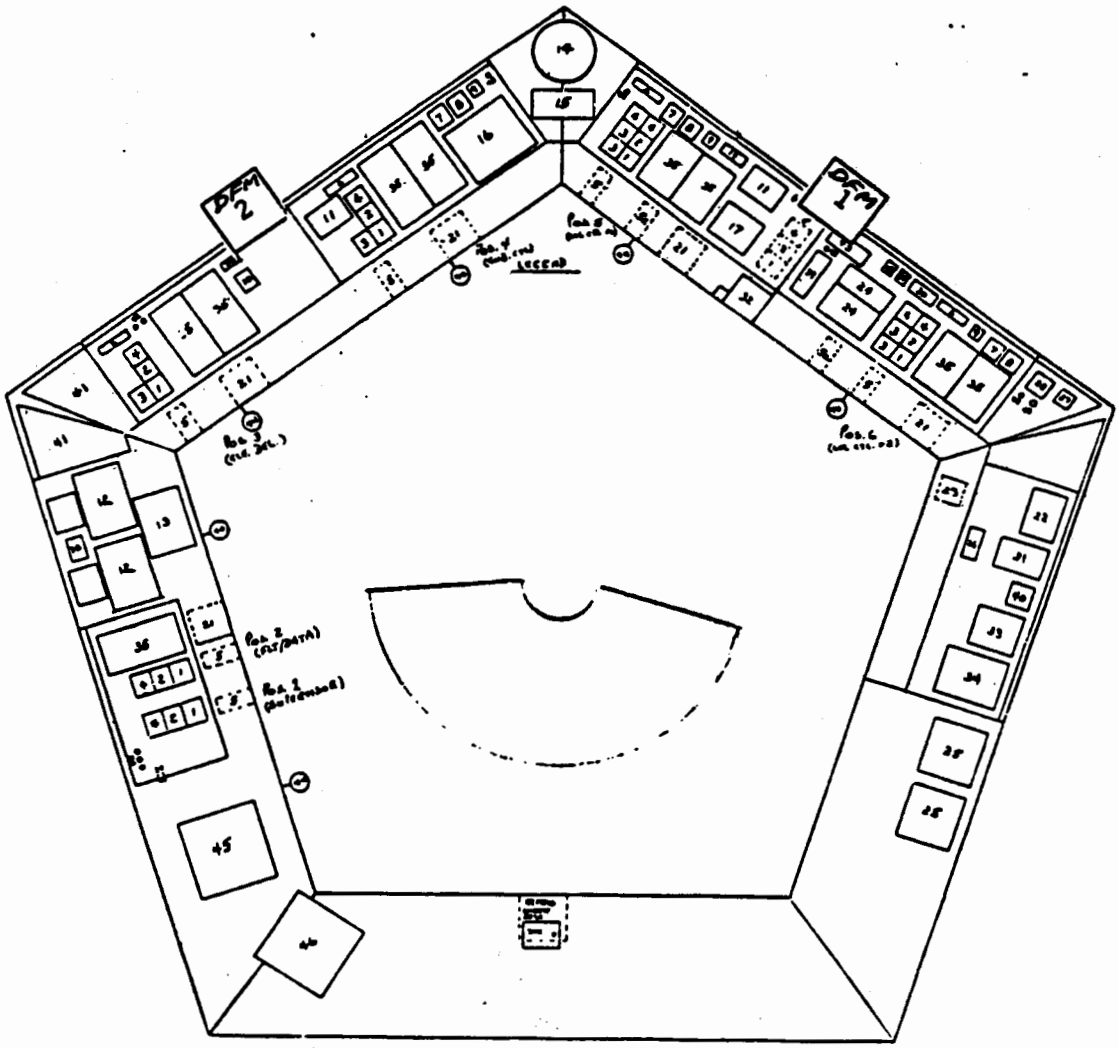

Figure 2-8 PLACEMENT OF EQUIPMENT FOR TEB

TETERBORO TOWER

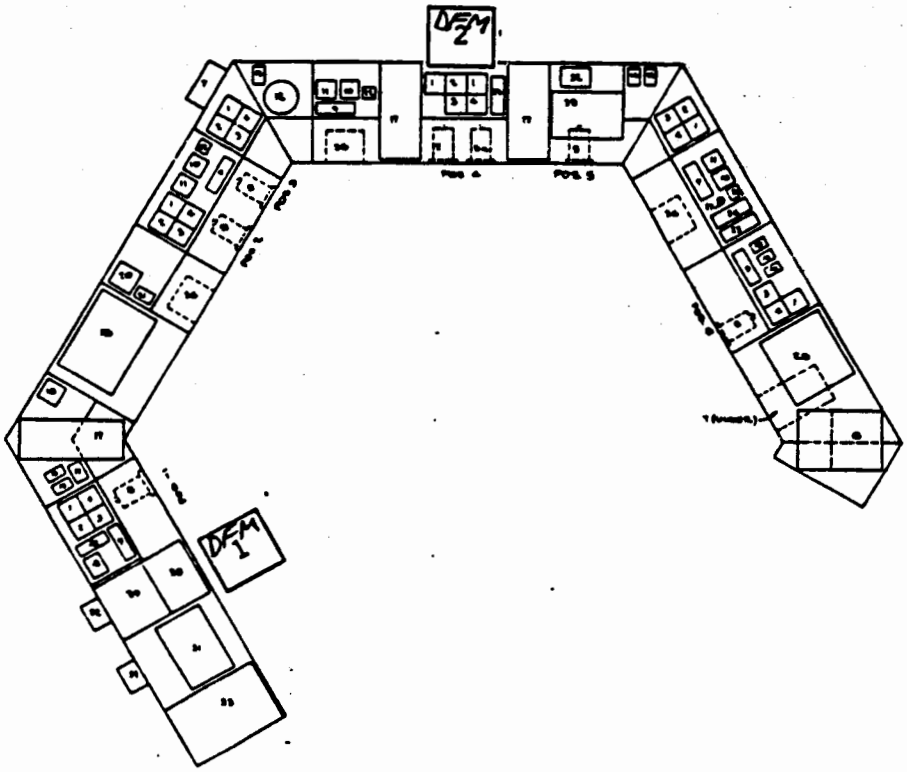

Figure 2-9 PLACEMENT OF EQUIPMENT ATR ISP

ISLIP TOWER

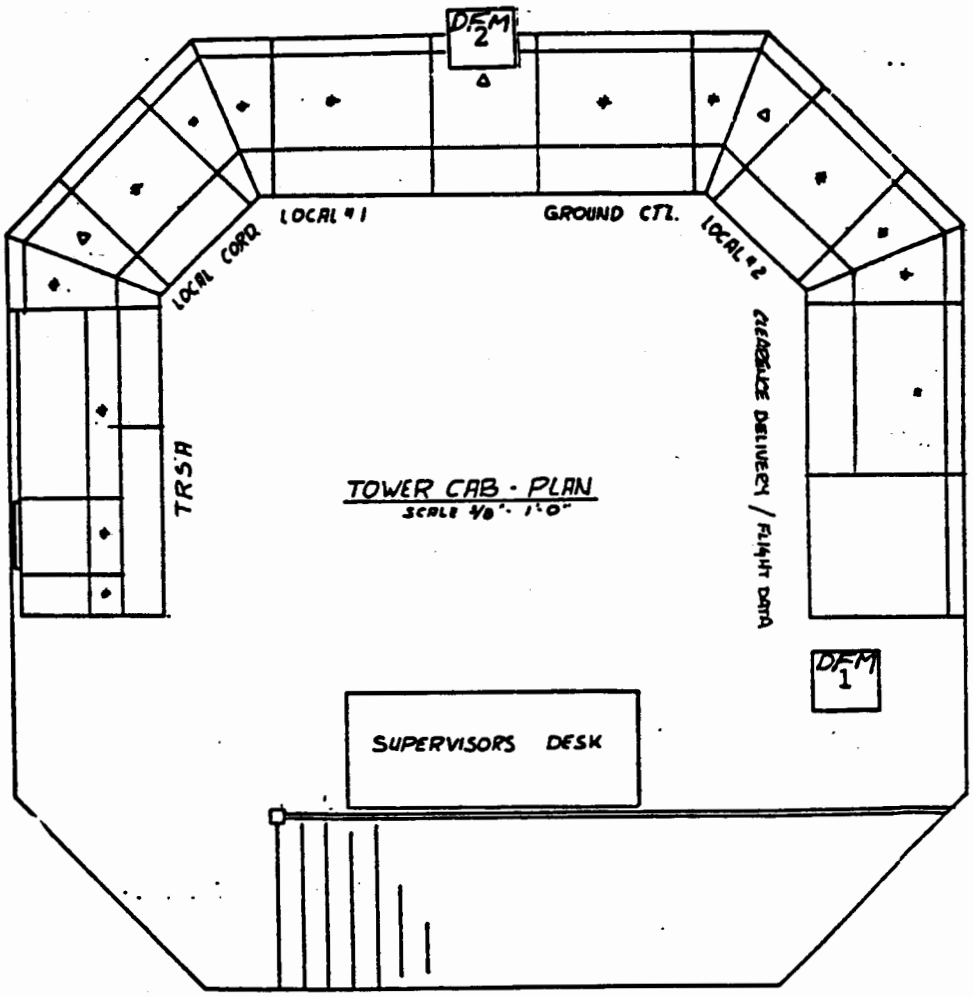

2.2 TOWER OPERATIONS

Tower DFM operations are designed for a minimum amount of data entry work. There are two data entry stations: DFM-1 and DFM-2. A computer keyboard and screen is provided at DFM-1 but most of the data entry work will be performed on just a few function keys. Occasionally, numbers and letters are entered; for this reason the full keyboard is provided. (An operational DFM system may have a smaller keyboard than the testbed system). A joystick with two buttons and a terminal screen are provided at DFM-2. The data entry work at this station consists of designating a flight with the joystick and pushing a button.

2.2.1 Position DFM-1

Table 2-10 summarizes the primary functions that need to be performed by DFM-1. Two cases are considered: normal operations and gate-hold operations. In normal operations, DFM-1 functions will be performed by Clearance Delivery (CD) and during gate-hold operations, similar, but not identical functions, will be performed by Gate Hold (GH). In Table 2-10 the operational events that trigger DFM actions are based on the SOP for Kennedy Tower. Other Towers' operations will be somewhat different and the exact triggering events will be determined by Tower personnel.

Figures 2-11, 2-12, and Table 2-13 show: the main screen viewed by DFM-1, the definition of the functions keys which are on the left hand side of the keyboard, and the sequence of data entry actions required for various functions.

Most of the work performed by CD will be in moving the cursor (an inverse-video bar that highlights a flight line) to a flight immediately after delivering its clearance and then pressing the 'F1' key to signal the computer that the flight is active. The time of this 'CLEARANCE DELIVERED' function will be automatically recorded by the computer's clock.

Table 2-10 DFM-1 FUNCTIONS

(keyboard data entry and computer screen display)

CLEARANCE DELIVERY during regular operations

1. Do 'CLEARANCE DELIVERED' entry after giving clearances to a flight.
2. Do 'NON-SERVICE RUNWAY' entry when non-service runway is used by a flight. LCC will coordinate changes if pilot not on CD frequency.
3. Do 'CHANGE SERVICE RUNWAY' entry when the service runway changes. LCC will coordinate.

GATE HOLD during gate-hold operations

1. Do 'CLEARANCE DELIVERED' entry when called by pilot. (assumes that clearances were just delivered)
2. Do 'NON-SERVICE RUNWAY' entry when non-service runway is used by a flight. LCC will coordinate changes if pilot not on GH frequency.
3. Do 'CHANGE SERVICE RUNWAY' entry when the service runway changes. LCC will coordinate.

(Data entry work detailed in Table 2-13)

The computer will assume that the a newly activated flight will depart on the service runway. If this is not so, then an entry will be made to specify the non-service runway. If the runway is changed after the flight is on Ground Control (GC) frequency, then the action by CD will be coordinated by the Cab Coordinator (Local Control Coordinator) (LCC).

Data entry will be required when the departure service runway changes. The computer will automatically assign the new runway to flights below a designated flight. (The flights are listed on the screen in departure-time order, the earliest time first).

Figure 2-11 DFM-1 MAIN SCREEN (F2)

DEPARTURE FLOW MANAGEMENT 5/13/86 1347

CID	AID	TYPE	SID	PTIME	AREA	RWAY	LINEUP	DEPART	DELAY
987	PEX33	B737	HUO	1321	G78	31	*	1349	23
112	EA1491	B727	MARES	P1325	G8	31	*	1351	21
722	RC359	DC9	CYN	1332	G51	31	*	1353	16
033	AA517	B727	HUO	1327	G5	31	1	1355	22
170	NYA125	DC9	RBV	P1338	G50	31	1	1356	18E
260	EA1100	H/A300	CYN	1340	G8	31	2	1358	13
365	AC141	H/B767	SBJ	1335	G79	31	T	1400	20
225	MID169	DC9	MARES	1345	G77	31	-	1402	12
012	TW343	B727	RBV	P1338					
391	UA1009	B737	CYN	P1340					
442	TW81	MD80	RBV	P1340					
447	PCA1221	SH3	SBJ	P1343					
323	DL120	H/L101	HUO	P1344					

(pending clearance)

PTIME : filed P-time has 'P' in front, amended time does not
AREA : gate area determined by airline code, can be changed
RWAY : service runway, can be changed
LINEUP: * in final line-up
2 in staging line-up #2 (can have 1, 2, or 3)
T taxiing
- at gate
DEPART: calculated takeoff clearance time
DELAY : minutes of delay. 'E' means EDCT delayed.

Figure 2-12 DFM-1 KEYBOARD FUNCTION KEYS

press after clearances given →

F1 CLEARANCE DELIVERED	F2 MANAGE DEPARTURES	← get main screen
F3	F4 CHANGE FLT DATA	← get new screen to change flight data
F5	F6 CHANGE APRT DATA	← get new screen to change airport data
F7 TAKEOFF	F8 OVERRIDE SEQUENCE	← get new screen to change lineup order
F9 DELETE VFR FLT	F10 ADD VFR FLIGHT	← get new screen to add VFR flight data

Table 2-13 DFM-1 KEYBOARD DATA ENTRY

```
CLEARANCE DELIVERED (for every flight)
  put cursor on flight (press UP/DOWN ARROW keys)
  press F1 key

NON-SERVICE RUNWAY
  put cursor on flight
  press F4 key
  put cursor on RUNWAY line
  press LEFT/RIGHT ARROWS to get runway
  press F2 key

CHANGE SERVICE RUNWAY
  put cursor on first flight to depart the new runway
  press F6 key
  press LEFT/RIGHT ARROWS to get runway
  press F2 key

CHANGE FLIGHT SEQUENCE (when lineup is wrong)
  put cursor on flight to move
  press F8 key
  put cursor on position to insert the flight
  press RETURN key
  press F2 key

MANUAL TAKEOFF (when ARTS-acquire fails)
  put cursor on flight
  press F7 key
  press Y (to confirm)

ADD VFR FLIGHT (when VFRs affect IFR departure times)
  press F10 key
  enter AID, TYPE, PTIME, AREA, RWAY, or leave as is
  press F2 key

DELETE VFR FLIGHT
  put cursor on flight
  press F9 key
  press Y (to confirm)
```

Figure 2-14 shows the data items that can be changed for an IFR flight. Two items are added to this list when a VFR flight is called up: the aircraft identification, AID, and the aircraft type, TYPE.

CD will signal the DFM computer when a flight is known to be delayed beyond its P-Time. The amended P-time is used in measuring delay attributed to the ATC system in gate-hold operations, so an accurate value is desirable. (If there are no gate-hold operations, taxi-start time is used in measuring delay).

Figure 2-14 CHANGE FLIGHT DATA, DFM-1 SCREEN (F4)

```
033  AA517

PTIME  : 1327
RWAY   : 31
LINEUP : 3
AREA   : G5
TAXI   : 1356
ADD    : 0 min

Move cursor to item and type in change
Press F2 to send new data
Press ESC to escape without changes
```

The AREA name is a gate-area or parking-area name that is assigned by the computer, based on the airline code in the AID. A table of airline-to-area assignments is kept in the Apollo computer and these can be changed by coordinating with the Center. The AREA assignment for a flight can be changed by the Tower but an AREA name that is already in the computer must be used. The AREA is changed by putting the cursor on the AREA line and pressing the right arrow or left arrow keys until the correct AREA shows on the screen. The reason for correcting AREA is so that a good estimate of the 'taxi duration' can be used in the 'earliest departure time' calculation. A table of taxi durations from each area to each runway is kept in the Apollo computer and their values can be changed by the Center.

The ADD MINUTES function is performed by DFM-1 when directed by DFM-2. ADD MINUTES is entered when a departure will be delayed by arrival or departure traffic. Once the flight goes below the line on the DFM-2 screen (see Figure 2-16), it will be delayed N number of minutes, where N is the added number of minutes. See discusion under DFM-2 tasks.

Figure 2-15 CHANGE AIRPORT DATA, DFM-1 SCREEN (F6)

```
                AIRPORT PARAMETERS

        Dept Service Rwy : 22
        Gate Hold        : NO
        Push Back        : 5 min
        Freeze Time      : 3 min
        TakeOff Window   : 2 min
        Fastest Depart   : 50 sec
        Schedule VFRs    : NO

      FINAL DEPARTURE LINEUP SIZE
        Runway 04  :  3 max
        Runway 22  :  7 max
        Runway 13  :  1 max
        Runway 31  :  4 max

  Move cursor to item and type in change
  Press F2 to send new data
  Press ESC to escape without changes
```

Gate Hold: If YES, then filed/amended P-time is used to estimate when the flight is ready to leave the gate; otherwise, taxi-start time is used.

Push Back: Nominal time duration to push aircraft back from gate.

Freeze Time: If a flight is in final line-up and within freeze-time minutes of departing, then the departure time will not change. The flight is no longer rescheduled.

TakeOff Window: Time window to release flight. If not released in time, then the flight is flagged on DFM-2 screen and added delay time should be entered by DFM-1 to free-up airspace.

Fastest Depart: Minimum time between departures on service runway. Used to regulate airport flow rate.

Schedule VFRs: set to YES if VFR flights are to be included in departure sequences.

Final LineUp Size: Maximum number of aircraft in line to runway. Must be at least 1.

Figure 2-15 shows airport data items that can be changed by the Tower; most of these parameters are explained in the notes under the figure. The 'final line-up size' is the maximum number of aircraft that may be in line for the runway. The computer will automatically keep the final line-up filled with aircraft from staging line-ups or with aircraft that are taxiing to the runway.

Figure 2-16 OVERRIDE SEQUENCE, DFM-1 SCREEN (F8)

SEQUENCE	
987	PEX33
112	EA1491
722	RC359
033	AA517
170	NYA125
260	EA1100
365	AC141
225	MID169
012	TW343
391	UA1009

Move cursor to new position and press CR
Press F2 to send new data
Press ESC to escape without changes

Figure 2-16 shows the display used for changing the order of aircraft when their real sequence on the airport is different from the computer's sequence. Changing the flight sequence on this display reorders the 'master sequence list' and, in the next cycle of departure calculations, the flights will receive new departure times to put them in the correct sequence. This function will be used mainly to correct mistakes in line-ups (either staging line-ups or the final line-up) but the function can also be used to give a particular flight a departure advantage over other flights, even at clearance time.

Figure 2-17 ADD VFR DATA, DFM-1 SCREEN (F10)

```
ADD VFR FLIGHT

AID   : VFR12
TYPE  : ***
PTIME : 1334
AREA  : G1
RWAY  : 22

Move cursor to item and type in data
Press F2 to send new data
Press ESC to escape without adding data
```

Figure 2-17 shows the data entry screen for VFR flights. Values may be entered or the default values used. For example, flights will be conseculatively identified VFR## and the PTIME will have the current clock time. Aircraft TYPE is not important to the DFM system because flying time will not be computed; TYPE is included on the data entry screen in case the Tower wants the data to show for information purposes. The AREA will be set to the first name on the airport's gate-area list. The RWAY will be set to the service runway and must be changed if different.

If many VFR flights use the same runway as IFRs, then the VFRs should be scheduled along with the IFR flights so that the computer is aware of the total departure flow at the runway. In this way, the computer will not try to schedule an IFR flight before it can takeoff behind an unknown VFR flight. The VFRs will be scheduled only at the runway - they will not be scheduled at a departure fix and thus will not be subject to, or cause, en route delays.

For VFR scheduling to work, the VFR parameter on the airport data screen (F6) must be set to YES and there must be active VFR flights in the computer - either from flight plans sent from the Center or from data entered on this screen. The VFR flight is automatically activated upon returning to the main screen from the data entry screen. VFR P-Time should be amended and taxi-start time entered, just like IFR flights.

2.2.2 Position DFM-2

Table 2-18 summarizes the primary functions that need to be performed by DFM-2. During the first phase of testing, an extra person - a DFM coordinator - will help LCC perform DFM functions. During the second phase of testing LCC will perform these functions alone. Figure 2-19 shows the terminal screen viewed by DFM-2, Figure 2-20 shows the joystick used by DFM-2 for data enty, and Table 2-21 details the data entry work.

DFM-2 will enter the taxi-start time by pressing the orange button on the joy stick. The computer will automatically use the current clock time and change the LINEUP field from '-' to 'T'. If an error is made, DFM-1 can change the taxi-start time on the CHANGE FLIGHT DATA screen.

The computer will decide which flight to move into the final line-up. The computer may move an aircraft from the head of a staging line-up to the tail of the final line-up; or the computer may put an aircraft that is taxiing to the runway in the final line-up next. The job of DFM-2 will be to check that aircraft are actually moved into final line-up position in the computer's sequence. If the actual line-up is different than the computer's, then the computer can be corrected at the DFM-1 position by using the OVERRIDE SEQUENCE key.

The three staging line-ups (#1, #2, #3) are simply a way of keeping three separate lists of departures at the same runway. The computer will make sure that the departure times on a list remain in time order. Flights at the top of each list may be assigned to the final line-up in any order. Thus, last minute holes over departure fixes can be effectively used.

The computer needs to know which flights are queued in a staging line-up so that it can keep their departure times in the proper order. A maximum of three staging line-ups may be used. Data entry work on the joystick occurs just after the flight is committed to the line-up. The use of a particular staging line-up is up to the LCC; for example, staging line-up #2 may be used for Solberg departures and, later, it may be used for departures in line on taxiway W.

Table 2-18 DFM-2 FUNCTIONS

(joystick data entry and terminal screen)

DFM COORDINATOR helping LCC during Operational tests

CAB COORDINATOR (LOCAL CONTROL COORDINATOR) during Evaluation tests

1. Do a 'TAXI START' entry close to the time the aircraft starts to taxi.

2. Coordinate with GC to sequence the flights in the order shown on terminal's screen. If a flight is near departure and has not yet called for taxi (e.g. the pilot did not inform the tower of a mechanical delay), then coordinate with CD or GH to amend the P-Time. If the actual line-up is different than the computer's line-up, then coordinate with CD or GH to resequence the flight in the computer.

3. If staging line-ups are used, do 'STAGING LINEUP' entry after the flight taxies to the end of the staging line-up. If there is only one line-up to the runway, no data entry is necessary; however, check to see that the actual line-up and the computer's line-up are the same.

4. Coordinate with LC to release flights when indicated on the terminal's screen. If there is no ARTS auto-acquire within X minutes of the computed departure time, the screen will indicate that the departure was delayed too long. Decide if there will be even more delay due to traffic. If so, then have DFM-1 do an ADD MINUTES entry to delay the flight N minutes so that the airspace over the fix can be used by someone else. The flight will drop below the line and then pop above the line approximately N minutes later. See Figure 2-19.

5. If ARTS auto-acquire does not work, then coordinate with CD or GH to manually indicate takeoff to get the flight off the screen.

6. Coordinate with CD or GH when non-service runways are used and when the service runway is changed.

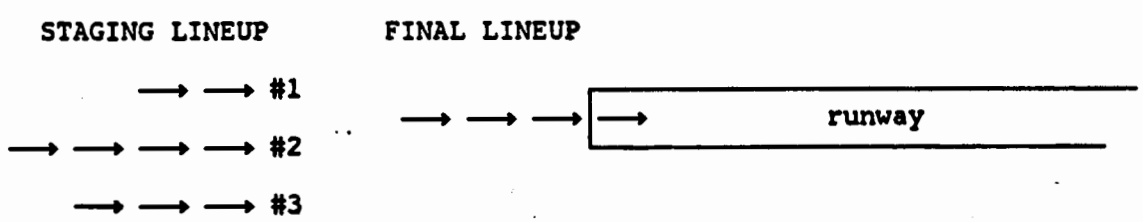

(Data entry work detailed in Table 2-21)

Figure 2-19 DFM-2 SCREEN

AID	TYPE	RWAY	LINEUP	TOFF
PEX33	B737			??
EA1491	B727	22		
RC359	DC9		*	5
AA517	B727		*	5
NYA125	DC9		1	6
EA1100	H/A300	22	-	8
AC141	H/B767		2	10
MID169	DC9		T	14

Flight position:
Above the line - Release flight as soon as safe
Below the line - Hold departures

RWAY : non-service runway

LINEUP
- * Flight in final line-up for runway
- 1 2 3 Flight in staging line-up for final line-up
- T Flight taxiing to runway
- - Flight at the gate or holding area

TOFF : minutes to go before takeoff

?? : Taking too long to depart; if more delay is expected, then have DFM-1 enter number of minutes. Will cause flight to drop below the line.

Figure 2-20 DFM-2 JOYSTICK

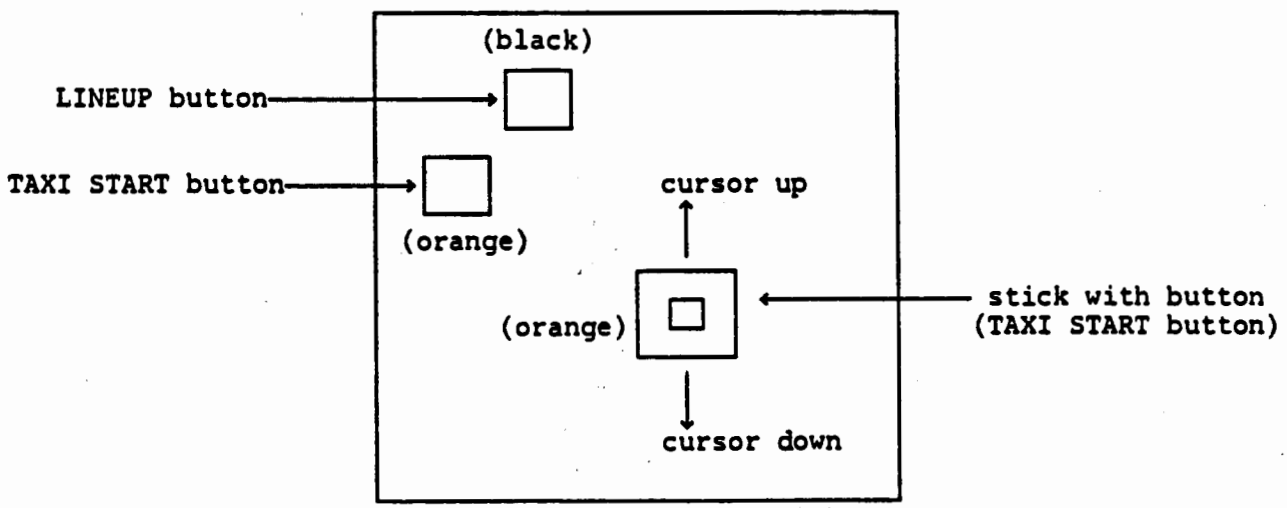

Table 2-21 DFM-2 JOYSTICK DATA ENTRY

```
TAXI START
  put cursor on flight (move joystick up or down)
  press either ORANGE button.

STAGING LINEUP
  put cursor on flight (move joystick up or down)
  press BLACK button one, two, or three times
     for line-up #1, #2, or #3.
```

Staging line-ups do not have to be used at all - just make sure that aircraft taxi to the final line-up in the sequence listed on the DFM screen. No staging line-up means no data entry is required. Staging line-ups are not used when just one taxiway leads to the runway. Staging line-ups are used when several taxiways hold aircraft in nose-to-tail lines in preparation for merging them into a final line-up. (The final line-up may be just one aircraft holding on the runway).

Aside from managing line-ups, DFM-2 should also watch for flights that do not depart within their time window. The size of the window can be adjusted by DFM-1. The terminal's screen will indicate when the time window has been exceeded but the computer will do nothing more. Thus, the computer will not suddenly hold a flight that is nearly ready to go. However, if LCC anticipates that there will be several minutes before the flight can leave, then he/she should tell the computer about the extra time so that that flight's airspace over the departure fix may be made available to some other airport. When minutes are added to a flight above the line, the flight, and those behind it, will be 'unfrozen' and their departure times recomputed. The flight will be pushed below the line and then pop above it again in approximately the input number of minutes. The flight will be put near the top of the 'master sequence list' for the rescheduling process so that it will get its desired departure time.

2.3 TOWER TRAINING

Tower personnel will be trained in classes at the TRACON in the May and June before the tests begin. There will be three training classes given by ATAC on the mornings of 5/29, 6/12, and 6/19. One or two 'core' controllers from each tower will attend the classes and they will instruct other contollers at their own facilities. A video tape will be made of the introductory part of the first class to aid the core group in training others.

The first phase of tests - the operational tests - are also training sessions that will prepare personnel for the evaluation phase.

The classes will have two micro systems available for hands-on instruction. The micros systems will communicate with the Apollo system and real-time data will appear on the screens. Tower operations will be simulated at the TRACON training sessions to show how the DFM system works. A training syllabus will be provided containing an outline of the course. The course will include a DFM overview, hardware description, software functional description, standard operating procedures, and test planning material. Special operations will be discussed. A one-page Users Guide will be attached to the DFM-1 stand and a copy provided for the training course.

Use of DFM equipment in the Tower will be fairly simple. For example, starting the computer program will be done by turning on the master switch at DFM-1 postion - the program will boot-up by itself and automatically dial the Center's phone number. How to use DFM functions in special departure situations will be more difficult than using the equipment itself. Some of these special situations can be anticipated before hand but many details will have to be worked out during the operational phase of the tests.

The DFM equipment will be maintained by the DFM team. For example, if a modem board malfunctions during a test, a spare board will be brought in from the Center. Tests may have to be run again if the malfunction of equipment destroys the usefulness of the test.

3.0 TRACON DFM

3.1 TRACON EQUIPMENT

Figure 3-1 shows the TRACON DFM equipment. The TRACON will use two of these microcomputer units, which are the same as the Tower units except that the terminal and joystick are removed. Table 3-2 lists the equipment and Figure 3-3 shows that one micro will be placed near the Islip sector departure management position and the other micro near the Newark sector.

3.2 TRACON OPERATIONS

Figure 3-4 shows the DFM main screen. TRACON operations will be similar to those in the Tower except that line-up and last minute delay information is not required. When a satellite Tower calls for clearance on an IFR flight, the DFM operator will put the cursor on the flight line and press the CLEARANCE DELIVERED key. The computer will calculate a departure time for the flight and this time will be transmitted to the Tower. A large freeze time will be used in the computer so that rescheduled departure times do not have to be relayed to the Tower. If the P-Time is amended, the flight will be unfrozen and a new departure time computed.

3.3 TRACON TRAINING

Training will occur in late May during installation and checkout of the equipment at the TRACON. One training class will be given on the morning of 5/30 and will cover the same subjects as the Tower classes. (The two micro systems at the TRACON can be configured as Tower or TRACON systems). The operational phase of tests also will be training sessions that will prepare TRACON personnel for the evaluation phase.

Figure 3-1 TRACON DFM EQUIPMENT DIAGRAM

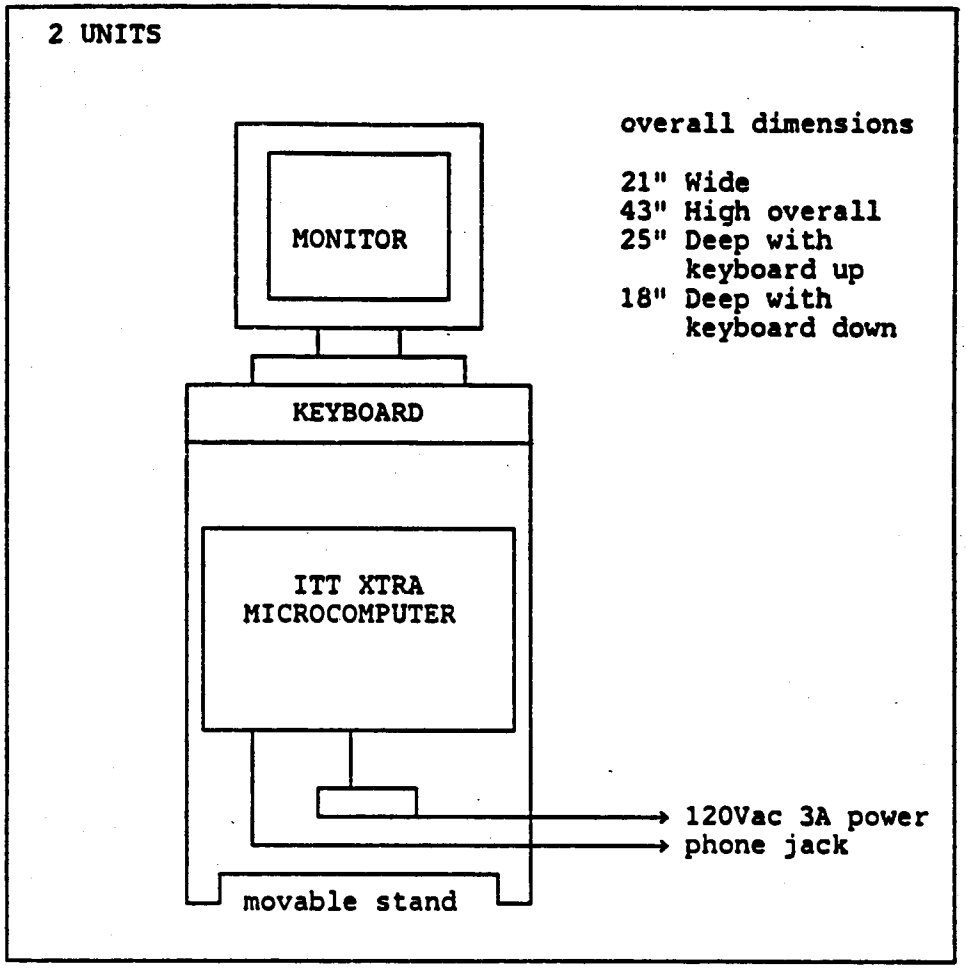

Table 3-2 LIST OF TRACON EQUIPMENT

2 Movable Computer Stands (see Figure 2-3)
2 ITT XTRA Microcomputers with:
12-inch Amber Screen Monitor
2 Floppy Disk Drives
640 KB Memory
1200-baud Modem (to phone line)
Clock
2 Power Extension Cords
2 Voltage Spike Protectors

Figure 3-3 PLACEMENT OF TRACON EQUIPMENT

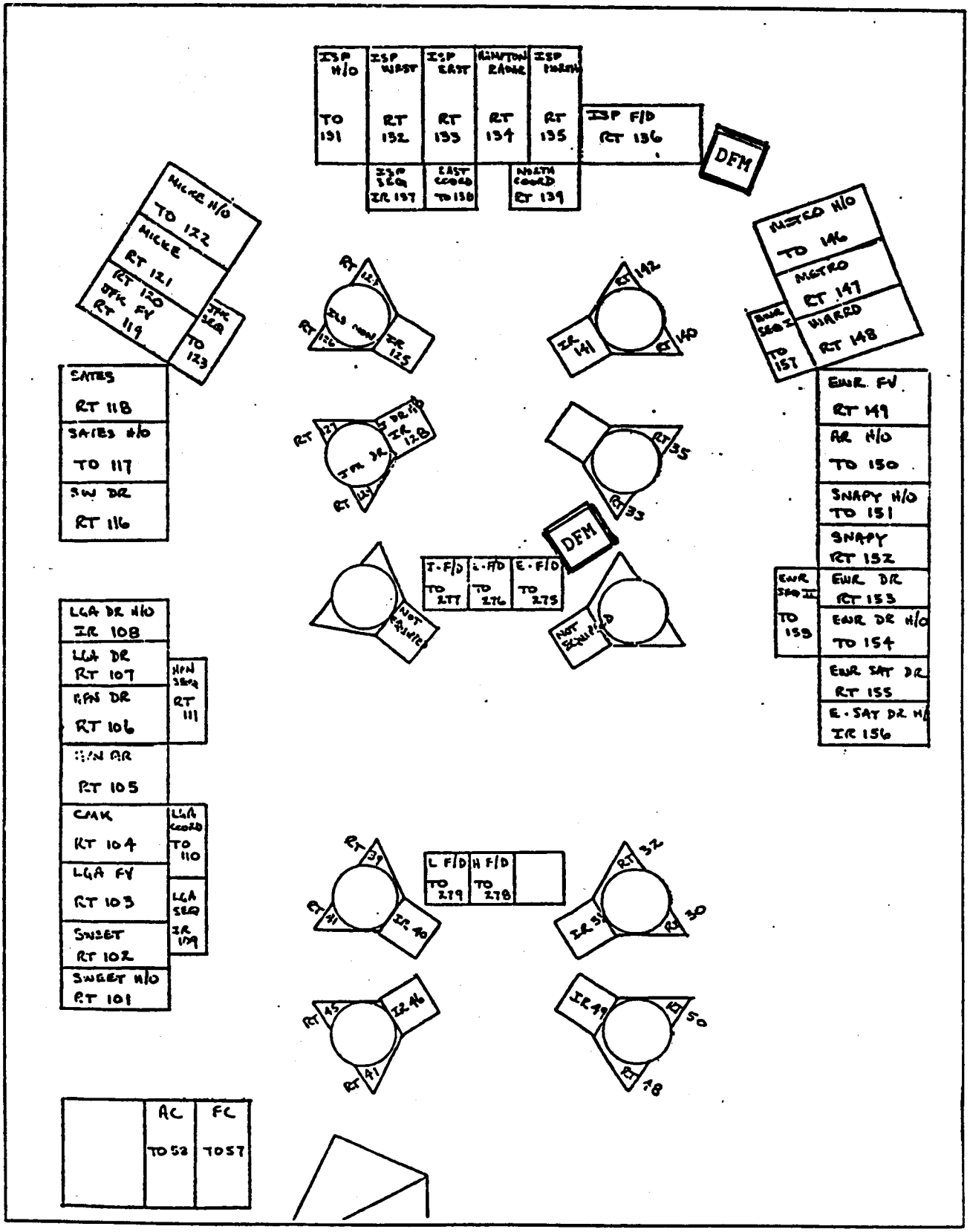

Figure 3-4 TRACON MAIN SCREEN

DEPARTURE FLOW MANAGEMENT: ISP SATELLITES 5/23/86 1347

APRT	CID	AID	TYPE		SID	PTIME	DEPART
CTO	987	N1334	DHC7		HUO	1321	1332
CTO	453	FAW116	BE10		HUO	P1325	1333
FOK	624	N4567	DO82		MARE	1327	1336
3N3	112	N9876	G3		SBJ	P1325	1336
HTO	044	PMT58	FA27	T	SBJ	1322	1337
CTO	879	N296CA	CA21		HUO	P1331	1340
HTO	504	ALC1071	DH6	T	HUO	P1434	1341
FOK	086	CMD18	SD3		MARE	1435	1441
CTO	287	N2655P	DH7		HUO	P1437	
FOK	988	PMT2454	PA31		MARE	P1435	
HTO	235	ALC1073	DH6	T	SBJ	P1435	
FOK	759	PMT2463	DH62		MARE	P1445	
HTO	644	N1781	SH3		HUO	P1456	

T SBJ : TEC flight
PTIME : filed P-time has 'P' in front, amended time does not
DEPART: calculated takeoff clearance time

Figure 3-5 TRACON KEYBOARD FUNCTION KEYS

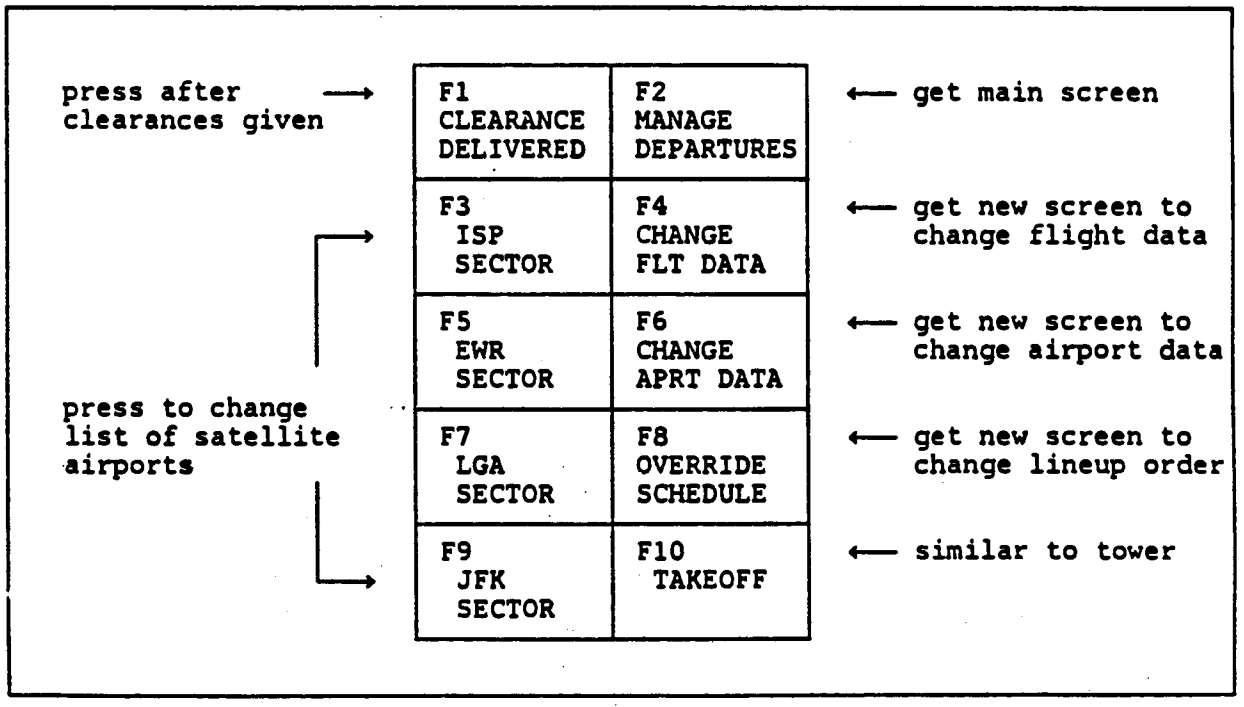

4.0 CENTER DFM

4.1 CENTER EQUIPMENT

Figure 4-1 shows the DFM equipment provided in the Center and Table 4-2 lists the equipment. Figure 4-3 shows the DFM desk placement in the departure pit area. The cable from the 9020, ten phone lines, and standard (not critical) power will be ported through the floor under the equipment rack part of the desk. All wires, connections, power expansion plugs, etc. will be contained in the desk and out of sight.

4.2 CENTER OPERATIONS

There will be one DFM station at the Apollo DN-330 screen and keyboard. Interaction with the system will take place through menu selection of one of five functions:

Fix Monitor
Flow Forecast
Sequence Override
Delay History
Database Management

Figure 4-4 shows the Fix Monitor Display. Three tables of sector activity will be viewed at the same time. Any three sectors can be chosen from the seven. Flights can be ordered by over-fix time, departure airport, or transition fix. The data on this table will be updated as it is sent to the Towers. The display will show only active and airborne flights. Once a flight crosses over the departure metering fix, it will disappear from the display. Data not shown on the display, such as status and delay time, will be available on a flight by flight basis. A complete block of data may be viewed by selecting a flight on the display.

Figure 4-1 CENTER DFM EQUIPMENT DIAGRAM

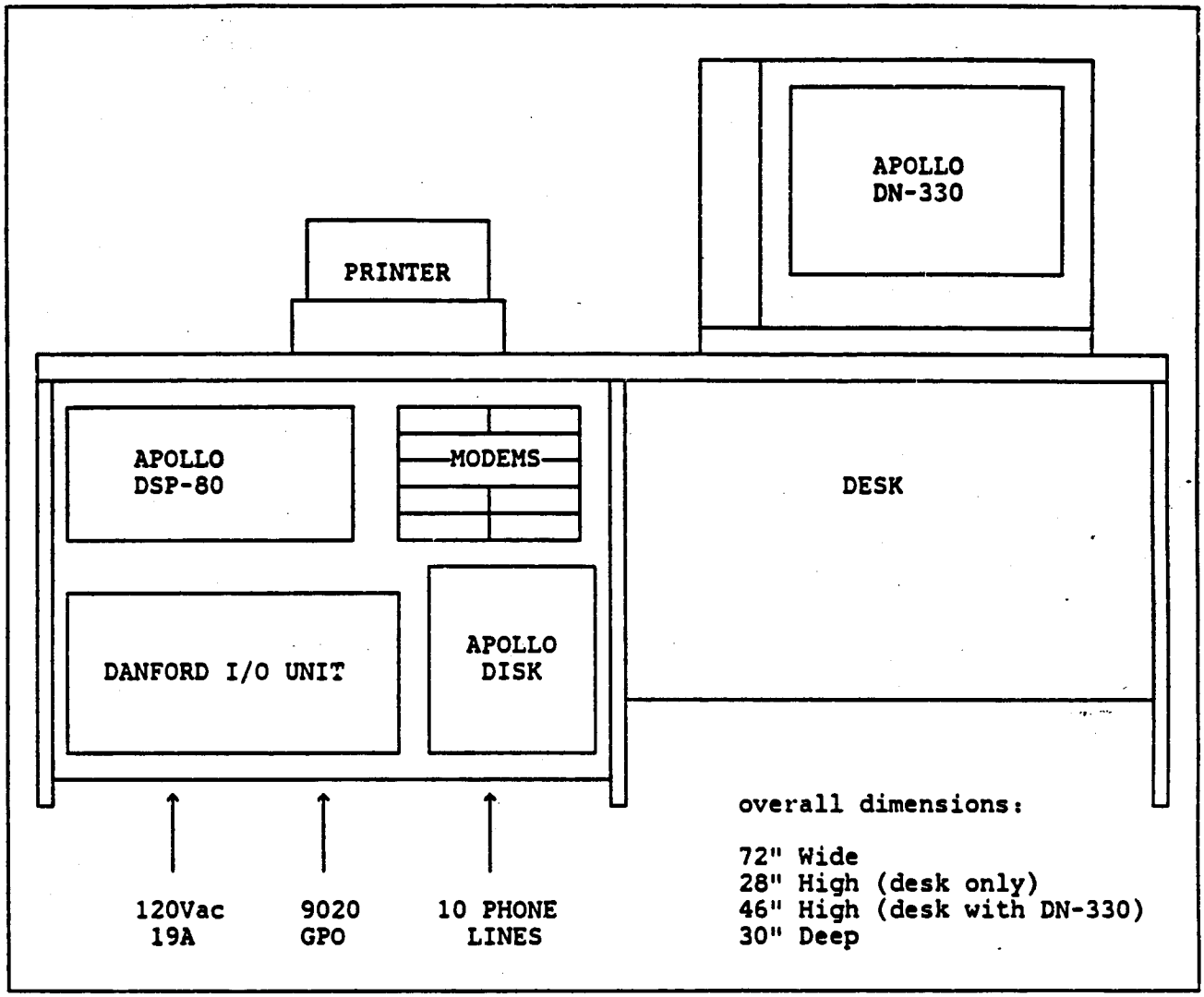

Table 4-2 LIST OF CENTER EQUIPMENT

Equipment Stand and Desk Unit (Figure 4-1)
Apollo Workstation Node DN-330-2MB
Keyboard with Touchpad
Apollo Disk Unit SMSD-70MB-1.2MB
Okidata-92 Dot Matrix Printer
Apollo Server Processor Node DSP-80A-2MB
Danford Serial I/O Board
Intel iSCB517 I/O Board (for 9020 input)
Danford Serial Expansion Unit SEU-1600
Hayes Smartmodem-1200 (10 modems)
Power Outlet Expansion Box (14 outlets)
Voltage Spike Protector (2 units 15A each)

Figure 4-3 PLACEMENT OF CENTER EQUIPMENT

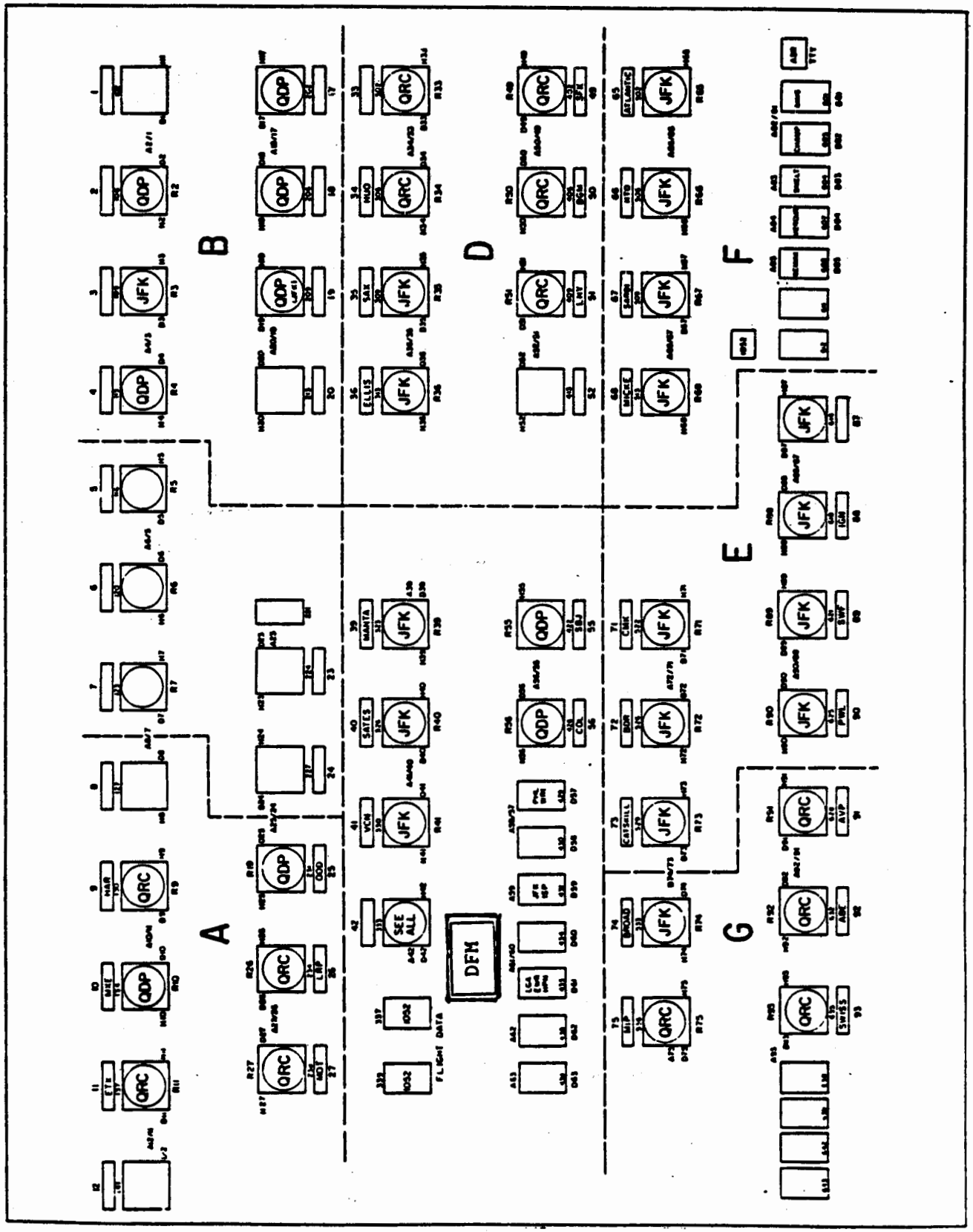

Figure 4-4 FIX MONITOR DISPLAY

SECTOR 35 HUGUENOT/SPARTA

SECTOR 56 ROBBINSVILLE

SECTOR 55 SOLBERG

CID	AID	APRT	DEST	OVER	TRANS
956	M200LV	HPN	FTY	A 1356	PSB
549	N32RP	HPN	PKB	A 1358	MXE
287	PEX33	LGA	DCA	A 1403	*EMI
379	MEP808	EWR	ATW	L 1406	MXE
273	PEX163	TEB	PHL	L 1408	ETX
739	FNT283	LGA	ORF	L 1411	*BOGGE
006	RAN488	EWR	OAK	T 1413	PSB
012	TW505	EWR	LAX	T 1416	ETX
637	N41CP	HPN	TNN	C 1418	MXE
237	TW840	LGA	IAH	C 1421	MXE
857	N771A	TEB	AGC	C 1423	*BOGGE

A = Airborne, L = Lineup, T = Taxiing, C = Clearances Delivered
* = Flow control restriction in effect for this flight

Figure 4-5 FLOW FORECAST DISPLAY

Departure Flow Forecast as of 2310							
TIME	HUO	SBJ	RBV	VCN	PLUME	SARDI	BELLE
2320-2330	5	9	1	6	6	9	5
2330-2340	8	8	5	3	9	1	11
2340-2350	2	6	7	7	1	4	6
2350-0000	12	9	10	7	7	4	12
0000-0010	6	4	8	5	1	9	3
0010-0020	8	6	14	10	6	10	4
2320-0020	35	42	45	38	27	37	41

Figure 4-5 shows the Flow Forecast display. This will be a view-only display of the predicted volume of traffic over the seven departure routes in the next hour (providing the 9020 sends flight plan data one hour before P-Time). The display can be used for early warning of congested routes. The data will include flights with and without clearances, so that no-show flights and IFR-turned-VFR flights will cause some error in the data.

Figure 4-6 SEQUENCE OVERRIDE DISPLAY

SEQUENCE	
987	PEX33
112	EA1491
722	RC359
033	AA517
170	NYA125
260	EA1100
365	AC141
225	MID169
012	TW343
391	UA1009

Figure 4-6 shows the Sequence Override display. It is similar to the Tower version of the same function. This display will show all NY flights currently being scheduled. (The Tower version lists only those flights for a particular airport). Frozen and airborne flights will not appear on the list. The initial order of flights on this 'master sequence list' is determined by their amended P-Time (see Section 1.4) but a flight can be given priority in the scheduling process by manually moving it higher on the list.

Figure 4-7 DELAY HISTORY DISPLAY

(Flights with 15-min Delay or more) / (Total Number in Hour 1300-1400)										
APRT	HUO	SBJ	RBV	VCN	PLUME	SARDI	BELLE	TOTAL	AVE	MAX
JFK	5/12	-	5/13	1/5	2/12	2/8	4/10	19/60	22	43
LGA	4/13	8/15	3/9	1/10	-	-	5/13	21/60	25	45
EWR	3/9	6/10	-	0/5	-	-	2/7	11/31	32	65
TEB	2/7	3/11	-	1/3	-	-	2/9	8/30	18	34
HPN	2/5	2/8	-	2/7	-	1/9	3/11	10/40	16	45
ISP	2/6	1/7	-	-	1/10	2/10	3/08	9/41	20	40
TOTAL	18/52	20/51	8/22	5/30	3/22	5/27	19/58	78/262	27	65

AVE = average departure delay (minutes)
MAX = maximum departure delay (minutes)

Figure 4-7 shows the Delay History display of departure delay for airports and metering fixes. It shows the number of flights which have a delay equal to or greater than 15 minutes, divided by the total number of flights. Also, average and maximum statistics are computed. The time duration of the delay assesment can be changed interactively.

A hardcopy printout will also be part of this function. The form of the printout will be similar to the NAPRS reporting system. Various input parameters will determine the data printed. The printout and history file will provide data needed for test analysis.

Figure 4-8 DATABASE MANAGEMENT FUNCTION

MENU
1. FLOW RESTRICTION DATA - metering fixes - effective time lists - departure points - destination points 2. AIRPORT DATA - runways - gate areas - airlines - taxi duration 3. FLYING DISTANCE DATA - runway to metering fix - fix to fix 4. AIRCRAFT DATA

Figure 4-8 shows the Database Management function. It will provide a menu-selection process for adding, deleting, or changing any item in the database. Many of the changes will take effect immediately; others will not be in effect until the next time the program is started up. The reason for this behavior is that some changes (such as deleting a primary metering fix) are not practical because they require complex programming to maintain the integrity of the data structures in memory. The important ability to add and delete flow control restriction is, however, one function that will be in effect immediately after input.

Two levels of flow control will be available. First, the seven metering fixes will be restricted to maximum flow-rates and these seven numbers can be changed as conditions require. Second, selective flow restrictions will be entered to restrict flights based on their departure or transition fix, departure or destination airport, time of

day, day of week, type of aircraft, and filed cruise altitude. These restrictions may be entered as miles-in-trail or minutes-in-trail.

4.3 CENTER TRAINING

Center TMU personnel will be introduced to the DFM system when it is first brought into the Center in late April and will learn its functions over the course of time it takes to setup the rest of the system. DFM uses Apollo's Dialogue user-interface software to run the menus and data entry functions. This user-interface software provides a consistant interactive environment between user and computer. Very little knowledge of the Apollo operating system will be needed to run DFM. The DFM software will be completely supported by pop-up HELP screens to aid the first-time user.

Maintenance of DFM equipment will be the responsibility of the DFM team (ATAC contractor and FAA/AES-320). The Apollo computers will be under a service contract. The Danford and Intel boards will have to be replaced if they malfunction.

5.0 DFM TESTS

The DFM tests will start in July and continue through September. The tests will be divided into two phases. The first phase will work out the operational rough spots in the system and the second phase will provide an evaluation of DFM. The tests will occur on specified days and during specified hours.

Table 5-1 TEST STARTUP

Minutes	Tasks
0	Start Apollo computer. Call to start Tower & TRACON micros.
15	CD input. Lineup in DFM sequence. Release at will.
45	Call to start DFM test. Release departures on DFM time.
xx	Call to turn off micros. Print test results.

Table 5-1 shows the general test startup procedures. The Center will initiate the test by calling the TRACON and each Tower to turn on their microcomputers - it will take about 15 minutes to get all eight micros running. The Apollo will start transmitting flight data to the Towers and, as flights call for clearances, the Tower will activate them in the computer by CLEARANCE DELIVERED entries. As the flights build up, the Tower will sequence them for departure in computer order. The computed departure times will not be meaningful at first because the computer will not be aware initially of flights on the taxiways and in the air. For this reason, the Towers will ignore the DFM release function for about 30 minutes.

After the system is loaded up and the flights on the taxiways are in DFM sequence, the Center will again call the TRACON and each Tower to start the main part of the test. At this point the Towers should release flights as they pop above the line. Tests will take 2 to 13 hours and the Center will call when the test is over. The DFM system should not be used to release flights after the test is over because calculated departure times will degrade as other airports stop using the system. After the test is terminated, the Center will continue using the Apollo computer to print test results.

5.1 OPERATIONAL TEST PHASE

The purpose of operational tests is to work out operational problems that are bound to arise with the DFM system. Some problems will be due to software bugs, other problems will be due to incompatibility between real operations and system software design, and others will be caused by inaccurate numbers in the database. The computer programs and database will be changed to make the system more effective. Another purpose of the operational test phase is to provide controllers with experience on DFM so that the evaluation will not be biased by working with an unfamiliar system.

When needed, each batch of tests will be preceeded by a Planning Meeting where the operational details and contingency plans of the tests will be discussed; questionnaires, test forms, and other materials will be provided at this time. Also, a debriefing will be given on the results of the previous batch of tests and the attendees will agree on changes in the DFM software functions. The Planning Meetings will be held at the TRACON when it is necessary for all test participants to be together; however, other planning functions will be coordinated at the facilities by the DFM team to lessen the burden on facility representatives traveling to the TRACON for each batch of tests.

A DFM Coordinator (DFMC) will be in the Towers, TRACON, and Center during the operational tests. Some Towers and the TRACON may not have the DFMC present during every test. DFMC may be an an Eastern Region Office represenative, FAA/AES-320 representative, or ATAC contractor. The function of the DFMC will be help run the DFM operations and to serve as a central point for feedback.

Table 5-2 shows that 12 tests are planned for the operational phase. The tests begin the week of July 7, 1986. The first four test will be planned in detail during a meeting on Monday. Tests #1 through #3 will be during a light traffic period, 1015 to 1300 local time. At first only CD, aided by DFMC, will enter data. The flights will be sequenced and released on DFM time but LCC will not worry about staging line-ups or time windows. Test #4 will include data entry by LCC aided by DFMC.

Table 5-2 OPERATIONAL TEST SCHEDULE

WEEK 1	DAY 1	Planning Meeting			
	DAY 2	TEST #1	1015-1300	CD input	light traffic
	DAY 3	TEST #2	1015-1300	CD input	light traffic
	DAY 4	TEST #3	1015-1300	CD input	light traffic
	DAY 5	TEST #4	1015-1300	CD/LCC input	light traffic
WEEK 2	DAY 1	Planning Meeting			
	DAY 2	TEST #5	1015-1300	CD/LCC input	light traffic
	DAY 3	TEST #6	1015-1300	CD/LCC input	light traffic
	DAY 4	TEST #7	1115-1500	CD/LCC input	medium traffic
	DAY 5	TEST #8	1115-1500	CD/LCC input	medium traffic
3	DAY 6	TEST #9	1115-1500	CD/LCC input	medium traffic
	DAY 7	TEST #10	1515-2000	GH/LCC input	heavy traffic
	DAY 8	TEST #11	1515-2000	GH/LCC input	heavy traffic
	DAY 9	TEST #12	1515-2000	GH/LCC input	heavy traffic

After the first week of tests, a one-week break will be taken for analysis and software changes. Another planning meeting will start off the next batch of tests, which will run for two weeks. During these tests, the test period will move from light traffic, 2-hour tests, to heavy traffic, 4-hour tests. The the heavy traffic periods probably will include gate-hold operations so that DFM can be studied under high-delay conditions.

Table 5-3 lists example questions to answer during the operational tests. The method for collecting much of this information will be through use of questionnaires and feedback to the DFMC. The last three questions are more quantitative in nature and factual data will be used to study these issues. For example, Center strips will be analyzed and flying times and taxi durations will be measured.

Table 5-3 SOME OPERATIONAL QUESTIONS

Are there software bugs?
- keys or buttons don't work as expected
- bad departure times
- line-up sequence not maintained

Do unusual operations crash the system?
- taxi back to gate from line-up
- no clearances
- last minute clearance changes
- SWAP operations

What operations are difficult when using DFM?
- arrival/departure same runway
- multiple departure runways
- switch runways
- departure staging
- taxi to DFM sequence
- no-delay operations
- VFR scheduling

How can the display be improved?
- add, delete, rearrange columns
- change headings
- contrast and glare
- faster response
- cursor movement

What functions need to be added?
- delay statistics
- separate runway lists

Can the equipment be arranged better?
- location of equipment
- cables in the way
- disconnect problems

How can the controllers work be made easier?
- change responsibilities of CD, GH, LCC
- different default values
- different triggers

What operational events should be used to trigger DFM input?
- clearance delivered indication
- amended P-Time input
- taxi start indication
- staging line-up designation
- last minute delays

Are the time-calculation methods good enough?
- earliest departure time
- APT time
- departure delay
- takeoff vs. ARTS acquire

How does the actual departure flow compare with DFM?
- sequence across the fix
- over-fix time
- inter-aircraft spacing at merge points

Is the database accurate?
- flying time
- taxi duration
- gate areas and airlines

5.2 EVALUATION TEST PHASE

The purpose of the evaluation tests is to provide an evaluation of effectiveness of the DFM system relative to the goals of aiding departure sequencing in the Tower, aiding flow control in the Center, and reducing departure delays.

Table 5-4 EVALUATION TEST SCHEDULE

WEEK 1	DAY 1	Planning Meeting	
	DAY 2	TEST #1	1515-2000
	DAY 3	TEST #2	1515-2000
	DAY 4	TEST #3	1515-2000
	DAY 5	TEST #4	1515-2000
WEEK 2	DAY 1	Planning Meeting	
	DAY 2	TEST #5	1015-2000
	DAY 3	TEST #6	1015-2000
	DAY 4	TEST #7	1015-2000
	DAY 5	TEST #8	1015-2000
3	DAY 6	TEST #9	1015-2000
	DAY 7	TEST #10	1015-2000
	DAY 8	TEST #11	1015-2000
	DAY 9	TEST #12	1015-2000
WEEK 4	DAY 1	Planning Meeting	
	DAY 2	TEST #13	0615-2000
	DAY 3	TEST #14	0615-2000
	DAY 4	TEST #15	0615-2000
	DAY 5	TEST #16	0615-2000
5	DAY 6	TEST #17	0615-2000
	DAY 7	TEST #18	0615-2000
	DAY 8	TEST #19	0615-2000
	DAY 9	TEST #20	0615-2000
	DAY 10	Planning Meeting	
6	DAY 11	TEST #21	0615-2000
	DAY 12	TEST #22	0615-2000
	DAY 13	TEST #23	0615-2000
	DAY 14	TEST #24	0615-2000
	DAY 15	TEST #25	0615-2000
7	DAY 16	TEST #26	0615-2000
	DAY 17	TEST #27	0615-2000
	DAY 18	TEST #28	0615-2000
	DAY 19	Final Meeting	

Table 5-4 shows the planned test schedule for the evaluation phase. Tests will be divided into three periods: there will be one week of 4-hour tests (4 hours plus 45 minutes for build up); two weeks of 9-hour tests; and three weeks of 13-hour test. One-week breaks between test periods will be used to analyze data. Planning meetings will be held before and during the tests to work out the details. The

tests will be performed by facility personnel as much as possible, with the DFMC acting in an observation role, rather than an active coodinating role.

Some of the test days will be designated as non-DFM tests. Data taken under normal (non-DFM) conditions will be compared with DFM results. The Apollo at the Center will be used on non-DFM test days but Tower and TRACON micros will not be used.

Table 5-5 EVALUATION QUESTIONS

1. Does DFM improve departure operations in the Tower?
   - eliminates airport flow restriction management
   - provides departure sequencing
   - helps engine-start estimates in gate-hold
   - reduces Tower/TRACON interaction
   - reduces Tower/Center interaction
   - reduces strip marking

2. Does DFM give the Center control over departure flows?
   - helps in rerouting operations
   - manages fix flows
   - spaces aircraft at merge points
   - implements selective flow restrictions
   - provides statistical reports on departure delay

3. Does DFM reduce departure delays?
   - increases fix flow
   - increases airport flow
   - is confirmed by controllers
   - is confirmed by airlines

4. Are there requirements on an OPERATIONAL DFM system that are needed in addition to the requirements provided by the testbed.
   - need dedicated data lines
   - need restart capability
   - eliminate some overlapping Tower work

Table 5-5 lists four basic questions that are to be addressed in the evaluation. The points under each question are directions that the evaluation may take in answering the question. The two-month period after the tests are finished will be used to compile and analyze data and prepare the test results. The test results will be based on qualitative and quantitative analyses. Much of the evaluation will depend on the perceptions of those using the DFM

testbed. A qualitative analysis of these preceptions will be based on questionnaires.

Some quantitative analysis can be applied to question number three. A comparison of DFM versus non-DFM departure delay time is possible but the results would be questionable because delays can be very erratic from day to day. A computer model can provide a valid comparison because the same day can be run twice, once with DFM and once without. But a comparison of real delays is not trustworthy.

A better approach is to use 'Time Between Aircraft' (TBA) measurements instead of delay time. TBA is a number that involves a pair of aircraft and it is the basic unit of aircraft flow. Statistics of TBA numbers at an airport or fix are more stable than delay statistics. Delay is erratic because random sequences of events precipitate the growth and accumulation of delay. TBA numbers are more stable because there is no cumulative effect - TBA is largely independent of the growth pattern of delay. Valid comparisons can be made using DFM and non-DFM days for which the flows are at capacity - days with departure-delay conditions.

TBA data will be extracted from Apollo history files produced by the DFM testbed and also may be extracted from Center 9020 AMP tapes. Time series analysis (moving window average) will be performed and statistics (mean, standard deviation, etc.) will be computed. TBA anlysis is equivalent to flow-rate analysis and is directly related to analysis of delay. Flow rate at fix and airport is the cause of delay build up. Thus, an analysis of TBA will provide the quantitative answers needed in question three.