COPY 1

FAA WJH Technical Center
00092426

NAFEC TECHNICAL LETTER REPORT

NA-78-60-LR

NA-78-60-LR

AIR ROUTE TRAFFIC CONTROL CENTER (ARTCC)
"E" POSITION DESIGN GUIDELINES

DEC '78

by Donald M. Millar
Francis M. Willett, Jr.
William Lewis

NOVEMBER 1978

FEDERAL AVIATION ADMINISTRATION
NATIONAL AVIATION FACILITIES EXPERIMENTAL CENTER
Atlantic City, New Jersey 08405

NOTICE

This document is disseminated to provide for quick reaction release of technical information to selected users. The contents may not conform to FAA formal publication standards and the technical information is subject to change and/or incorporation into a formal publication at a later date.

Approved by _____
ROBERT L. FAITH
Director, National Aviation Facilities
Experimental Center
Federal Aviation Administration
Department of Transportation

INTRODUCTION

PURPOSE.

The purpose of this project was the development of design guidelines to be utilized in configuring Air Route Traffic Control Center (ARTCC) "E" position complexes. Included in this effort was the investigation of techniques which would improve the task and ambient lighting conditions within this area.

BACKGROUND.

The ARTCC "E"-desk complex has never been updated to meet changing functions and requirements since the implementation of the automated en route system. In September of 1977, a requirement was identified by the Federal Aviation Administration (FAA) Air Traffic System Programs Division (AAT-100) to modernize the "E"-desk complex of the domestic ARTCC's. The objective was to develop design guidelines for a modernized "E"-desk complex which would (1) meet present and future functional and equipment requirements of the ARTCC's and (2) enable "E"-desk personnel to have sufficient space and features to effectively perform their duties.

This modernization was to be in conjunction with the proposed installation of Automation of Field Operations and Service (AFOS) equipment (see Appendix A) and the establishment of the new meteorologist and weather coordinator positions in the "E" complex. The meteorologist position is to be staffed by personnel from the National Weather Service (NWS) while the weather coordinator position is staffed by FAA personnel.

The "E"-desk complex area of a center is that part of the control room where the following personnel are generally located: assistant chief, flow controller, data systems specialist, military liaison specialist, and the added positions of weather coordinator and meteorologist. Some variations of these position locations exist among the facilities. The newly established positions and associated AFOS equipment will require realignment of the existing "E" complex.

The task of researching existing conditions and problems and subsequently formulating a design and reconfiguration of the "E" complex was assigned to the Systems Research and Development Service (SRDS) and to the National Aviation Facilities Experimental Center (NAFEC).

The initial project phase entailed a field research study, detailed in NAFEC Letter Report NA-78-31-LR, "Summary of Air Route Traffic Control Center (ARTCC) "E" Position Design-Research Phase." The recommendations of that report are as follows:

1. The new "E" desks' design and storage space should be modular to establish a standard. The standard would allow each center to select the desks necessary for their operations.

2. Drawer space should be kept to a minimum to reduce the collection of extraneous material.

3. A hinged Plexiglas cover top should be provided for each desk to facilitate posting of frequently required information.

4. Selective lighting for each "E" position should have an on/off switch with a rheostat to control the amount of light.

5. The feasibility to miniaturize telephone dial systems, PBX button director, etc., should be investigated by the telephone company.

The findings which support recommendation #1 resulted in a redirection from original intentions to develop a standard configuration for all ARTCC's to the design of individual work stations which could be functionally arranged according to center requirements and/or restrictions.

DISCUSSION.

Individual Work Station Design.

As the "E" complex increased in scope and size, assignment of a new position generally resulted in the introduction of any available office desk at this location. Although this did not necessarily impair the functional aspects of operations, there were aesthetic drawbacks to this approach. Additionally, with the installation of communication turrets on the desk surface, cable routing was random and exposed. Most desks utilized were 5-feet long, 34-inches deep, 30 1/2-inches high and had two integral drawer pedestals plus a pencil drawer. It is evident that these desks were not designed for "E" complex use, particularly with regard to the lack of a rear cable passageway for cable routing and also with regard to drawer style and quantity. Due to the fact that additional equipment has been and will be installed at the "E" complex (AFOS and weather radar displays) floor space limitations have arisen. On this basis it was decided to allocate 4 linear feet of desk space to each position as compared to the 5-foot desks presently being used at most centers. This 4-foot dimension requires that no more than one drawer pedestal be located at any one desk position.

A decision was made following the field research effort to design modular work stations for each assigned position at the "E" complex as opposed to a monolithic unit encompassing all positions. Modular approach enables flexibility in work station arrangement, both for present and future requirements. This holds true for the overall configuration and selection of drawer pedestal styles and/or other units such as secretarial returns, safes, etc., to be installed at any individual position. Equipment requirements for the various positions of operations are described in Appendix B (AAT-110 letter to AAF-500 dated January 17, 1978).

Two types of work stations, one 4-feet wide and the other 8-feet wide, were fabricated at NAFEC for evaluation purposes.

Figure 1 illustrates the 8-foot work station evaluated at NAFEC. This model is intended for use by two positions with drawer pedestal units located at one end and the center, or for one position with four pedestal units installed under the desk surface. Pedestal units are 17-inches wide and end panels are 2-inches wide, therefore personnel sitting at the desk will have 29 inches of lateral knee space as compared with approximately 25 inches for an ordinary desk. (At the 4-foot desk personnel would have 27 inches of lateral knee space). With the 8-foot work station, book case cabinets or other storage devices could be located under the desk surface if only a one position arrangement was desired. In those centers where adequate floor space is available, the use of 8-foot work stations should be considered due to this versatility. In addition, per position unit, there is more rear storage space as only one vertical access panel is necessary.

Figure 2 illustrated the 4-foot work station designed and evaluated at NAFEC Significant aspects of this model are as follows:

1. For use with one drawer pedestal of various styles.

2. Desk height of 29 inches.

3. Cable passage built into rear of desk.

4. Rear storage space (bookshelf, drawer, lateral file).

This 4-foot work station was designed on the basis of evaluator's comments received early in the evaluation phase of the project. Initial full-scale "E" complex mockups were comprised primarily of 8-foot work stations, however, sufficient requests were made for a "single" position that the 4-foot work station was devised. This style allows for more versatility in physical arrangements and supports the modular approach recommended for "E" position complex design.

COMMUNICATION TURRET DESIGN.

Figures 1 and 2 also illustrate the communication turret design. The 13-inch vertical height of the turret in conjunction with the 29-inch desk height surface dimension will provide a "see over" height of 42 inches. Maintaining the ability to view the main control room activities by individuals sitting at the "E" complex was strongly expressed by cognizant personnel during the field research effort and the evaluations conducted at NAFEC. Suggestions were received to increase the vertical slope of the turret face to further reduce the resultant 42-inch height. However, observations of panel indicators would be compromised by such changes. With the turret depicted, there are approximately 552 square inches (12"x46") of usable panel space for any one position. All equipment specified in the AAT-110 letter dated January 17, 1978, Appendix B, can be installed in this design. Centers selecting this turret should first make layout drawings using equipment dimensions and arrangements unique to their facility prior to fabrication to ensure that adequate space is available for installation. Observations made by field personnel during the evaluation

studies at NAFEC indicated there are variations, particularly in regards to TELCO equipment (AUTOVON, PBX, and 300 systems). Separate panels are recommended for individual installation of equipment in lieu of cut outs in one continuous panel. Consideration was given to attaching light fixtures, either fluorescent or incandescent, to the turret but this approach was ruled out primarily due to the increased turret height requirement.

LIGHTING.

Lighting of the "E" position complex is presently accomplished through various means. Full utilization of the fluorescent fixtures installed under the observation bridge provides adequate lighting levels and this is in effect at certain centers. At other centers, either with no observation bridge or where factors preclude complete use of these fixtures, lighting is accomplished primarily with gooseneck fluorescent fixtures attached to the communications turret. The main reason for not using the overhead fluorescent lights is based on controller complaints (reflection) attributable to these fixtures. Some centers have alleviated the reflection problem by the installation of a drape along the leading edge of the observation bridge. Such a drape 30 inches in length was demonstrated at NAFEC as shown in figure 3. This will provide baffling for the fluorescent lights when active sector PVD's are within 20 feet of the bridge. Increasing the length of the drape to 36 inches will provide baffling to within 15 feet of the bridge; 36-inch drapes will provide an overhead drape to floor clearance of 6 feet 6 inches.

As previously mentioned under the communication turret design discussion, installation of lighting fixtures upon or integral with the turret was ruled out due to increased turret height requirements. Consideration was also given to some form of hooded fixture attached to the turret, however, this would impair visual observation of panel indicators when viewed from the standing position. To satisfy work surface lighting requirements, a framing projector lighting system was studied. Lightolier fixtures, model No. 7644 mounted in electrical tracks installed in the ceiling above the "E" complex were evaluated, as shown in figure 3. Each 4-foot electrical track (model No. LIG 6001) was controlled through a dimmer switch to vary light intensity and the area lighted could be adjusted by fixture shutters. Additionally, lateral positioning of the fixture can be accomplished readily by location along any individual 4-foot track. This system was determined to be acceptable for task lighting at centers with an observation bridge. At those centers with no bridge, Houston and New York, installation of a support bar from the main control room ceiling to mount the electrical track with framing projectors would be required and is recommended. The framing projector technique for task lighting requires partial (25 percent) or full use of existing fluorescent fixtures to maintain adequate ambient light with the "E" complex.

CONFIGURATION DESIGN.

Physical arrangements of the "E" complex evaluated were generally of rectangular form utilizing full scale mockups of work stations, PVD's, AFOS consoles, and other associated equipment.

Figure 4 is a plan view of an "E" complex configuration initially proposed for the Kansas City ARTCC. Figure 3 is a view of this in mockup form. The evaluator for Kansas City suggested revisions to this proposed layout which are shown in figure 5. These include an aisle between the assistant chief (AC) and flow controller (FC) positions to allow passage to and from the control room floor at this point, an aisle between the Weather Coordinator (WC) work station and PVD, and installing a work station at the right end of the complex. The additional work station would include a bulletin board mounted on the rear for posting AFOS weather charts. As previously referenced, a description of the AFOS equipment is contained in Appendix A. Concern was expressed with this configuration as to the inclusion of the meteorologist position (AFOS, PVD, weather radars, and Geostationary Operational Environmental Satellite (GOES) Laser Facsimile Recorder) in the overall "E" complex. Figure 6 is a photograph of the meteorologist and weather coordinator positions.

A typical comment of center and regional personnel who participated in this study was that the meterorologist position should be separated or have separation from the main "E" complex. Although procedures for the dissemination of weather information received at the meteorologist position have not been finalized, it is anticipated that during shift changes team supervisors will receive a briefing at the AFOS consoles. This will entail approximately 10 personnel being at this location. This particular configuration, figure 6, can accomodate 10 persons for briefings. Personnel engaged in preparing "E" complex layouts should consider this a minimum for design purposes.

Other concepts depicted in the proposal for the Kansas City ARTCC are the location of up to four weather radars (19-inch TV consoles) above the meteorologist PVD/AFOS consoles and mounting of the input output typewriter (IOT) on commercially available pedestals (General Electric Terminet or equal). Selection of drawer pedestal styles and location is optional for each layout. Figure 7 illustrates various models of commercially available pedestals, if construction of work stations is accomplished under local contract, drawer style can be specified. Centers which elect custom fabrication, either of metal, wood or combination, should ensure that heavy duty drawer slides are utilized throughout (Jonathan Manufacturing Co., Teaneck N.J. 201-833-0061 part No. 371-14, Transglide Slide, or equal).

CONSTRUCTION.

No substantive information was compilied during this project which would support specifying either wood or metal as the principal material for work station fabrication. Selection of wood, plywood/formica, metal/formica, or metal as the primary construction element would be optional. No actual construction drawings have been prepared for the NAFEC 4-foot or 8-foot work station design, pending acceptance of recommendations contained in this report.

A vendor contacted following the evaluation phase prepared an assembly drawing of the 8-foot work station utilizing an aluminum enclosure system. Figure 8 details this model prepared by the Dorlec Corporation. The communication turret shape proposed by the manufacturer is of particular interest as it precludes the use of the top surface as a catchall. The integral turrets shown in the drawing were suggested by the vendor. This approach was not evaluated at NAFEC as the basic work station flexibility would have been reduced during mockup rearrangement. However, this style could have application in a final "E" complex configuration. Aluminum enclosure panels can be either painted or covered with formica. Due to the size of structural members used by the vendor, the work surface has a height of 29 3/8 inches in order to maintain the 27-inch dimension necessary for installation of commercially available pedestal units (refer to figure 7). With two adjoining work stations, only one "END SUPPORT" would be required (or drawer pedestals as selected). The "SHORT SUPPORT" would be removed if a drawer pedestal was located at the work station midpoint. The horizontal work surface would include a hinged, nonreflective plexiglas panel to contain, printed matter (Rohm and Haas Co., product No. P94-G, or equal). The stand for mounting weather radars above the PVD and/or the AFOS consoles could be readily fabricated using Dorlec components and would only require particular layout information. Figure 9 depicts a typewriting unit which would be used for mounting a typewriter.

MOCKUP EVALUATIONS.

Twenty nine personnel from ARTCC's and regional offices participated in evaluations of "E" Position Complex configurations and concepts at NAFEC. Ratings compilied through this effort are summarized in table 1 which follows the general format of the questionnaire completed by all evaluators. Appendix C contains a detailed analysis of ratings by region and center.

TABLE 1. "E" POSITION COMPLEX EVALUATION QUESTIONNAIRE SUMMARY

Evaluators were instructed to rate demonstrated items utilizing the following three values:

+ = Good, Improvement compared to existing
0 = Fair, No Improvement compared to existing
- = Poor, Unsatisfactory compared to existing

	Results			
	+	0	-	No Response
I. OVERALL "E" COMPLEX CONFIGURATION				
1. PHYSICAL LAYOUT	24	2	3	0
2. INGRESS/EGRESS	13	13	2	1
3. LIGHTING	20	6	3	0
II. INDIVIDUAL POSITION DESIGN				
1. DESK HEIGHT	25	3	0	1
2. STORAGE (DRAWER SPACE)	9	9	8	3
3. TURRET ARRANGEMENT	10	16	2	1
4. BOOKSHELF/FILE ACCESS	11	8	7	3
5. DESK LIGHTING				
a. CEILING MOUNTED FLUORESCENTS	5	12	5	7
b. TURRET MOUNTED FLUORESCENTS	4	3	14	8
c. OVERHEAD FRAMING LIGHTS	22	2	2	3
6. 1052 IOT LOCATION				
a. DESK MOUNTED	9	11	8	1
b. PEDESTAL MOUNTED	10	5	6	8
7. MANUAL TYPEWRITER LOCATION				
a. DESK MOUNTED	10	8	9	2
b. PEDESTAL MOUNTED	12	4	8	5
8. AFOS LOCATION	12	4	4	9

DISCUSSION.

1. Overall "E" Complex Configuration.

The majority of the evaluators rated demonstrated physical layouts as an improvement in comparison to existing configurations. However, in most cases these positive ratings were qualified with comments pertaining to increased restriction of general personnel access to the "E" complex. A constructive suggestion was made that any particular configuration have no egress or access aisle greater in width than 3-feet. Overall lighting was rated as an improvement, principally attributable to the overhead framing fixtures utilized for task lighting.

2. Individual Position Design.

Evaluators were favorably impressed with the desk height of 29 inches. Ratings were divided on storage (Drawer Space) due to the fact that most work stations would have only one drawer pedestal for each individual position. This item received comments in conjunction with No. 4, Bookshelf/File Access; some evaluators noted that one desk pedestal would satisfy routinely required storage requirements and the rear Bookshelf/File compartments would be utilized to store materials of less than routine nature. The turret arrangements evaluated by the participants were similar to existing arrangements as reflected by the ratings. Although the Bookshelf/File compartments would provide supplemental storage at the "E" complex, ratings and comments received indicate that personnel access would be inconvenient. This aspect of the work station design was considered during and following the evaluations, however, no satisfactory resolution has been accomplished. It is recommended that the basic work station design be maintained, including some type of rear storage, for incorporation in "E" complex configurations.

The Desk Lighting (task lighting) was rated favorably in regards to the overhead framing lights and the use of such fixtures is recommended.

Preference for 1052 IOT location was difficult to determine from the ratings received. A commercially available pedestal (General Electric Terminat) was demonstrated at NAFEC and such an assembly is recommended for mounting of IOT's in lieu of desk surface location.

No significant preference was given to manual typewriter locations. Evaluation of this item was affected by the variation in numbers of typewriters at various ARTCC "E" complexes, some of which have six and others which have only one. It is suggested that the use of a secretarial return as illustrated in figure 7 or the typewriting unit shown in figure 10 be considered for manual typewriter location.

The AFOS rating was based on this equipment being located integrally with the "E" Complex. This engendered numerous comments as to isolating the associated meteorologist position totally or partially from the main "E" complex.

RECOMMENDATIONS.

Based on project results, it is recommended that:

1. Modular design techniques be used in establishing "E" Position Complex Configurations.

2. In lieu of 5-foot office desks for each individual position, 4-foot and 8-foot work stations be utilized for single or dual positions within the complex.

3. Drawer pedestals be separate units for positioning at work stations, as required.

4. Framing projector lights be used to provide task lighting within the "E" complex.

This study was conducted in response to 9550-1 No. AAT-100-36 "Provide "E" Position Complex at ARTCC's," dated September 13, 1977, Subprogram 122-111, sponsored by ARD-111, Mr. Lauren Douglass. The project number is 122-111-610 and the NAFEC Program Manger is Felix F. Hierbaum, Jr. Further information can be obtained from Donald M. Millar, ANA-270, (609) 641-8200 extension 2395.

The following NAFEC personnel are available for consultation during ARTCC design and construction phases:

Felix F. Hierbaum, Jr.	Program Manager
Donald M. Millar	Project Manager
Francis M. Willett, Jr.	Air Traffic Control Specialist

These individuals can be contacted at:

ATC Applications Branch, ANA-270
NAFEC
Atlantic City, N.J. 08405
Tel: FTS: 346-2630 or 346-2651
Tel: Com: 609-641-8200 x-2630 or x-2651

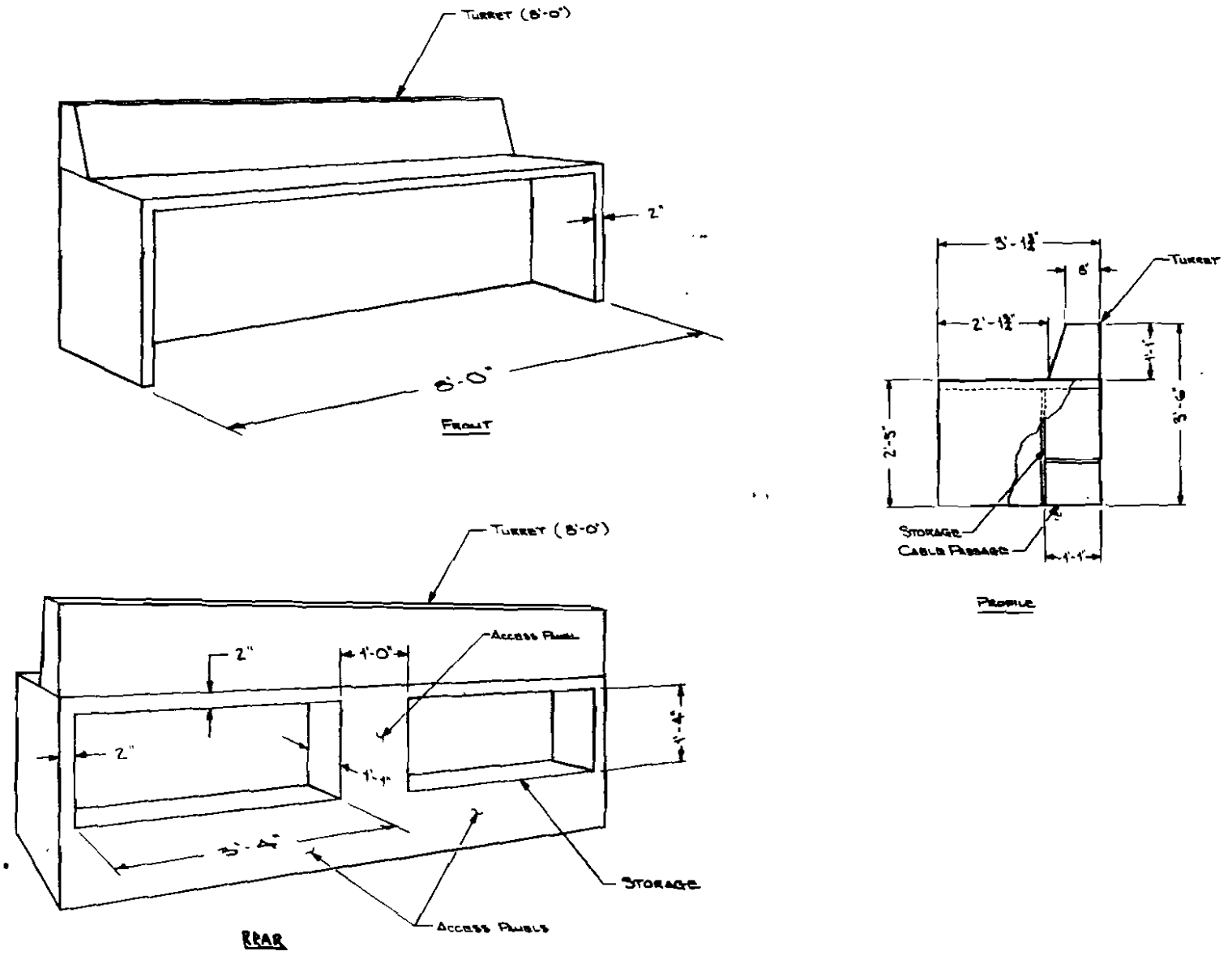

FIGURE 1. 8-FOOT WORK STATION

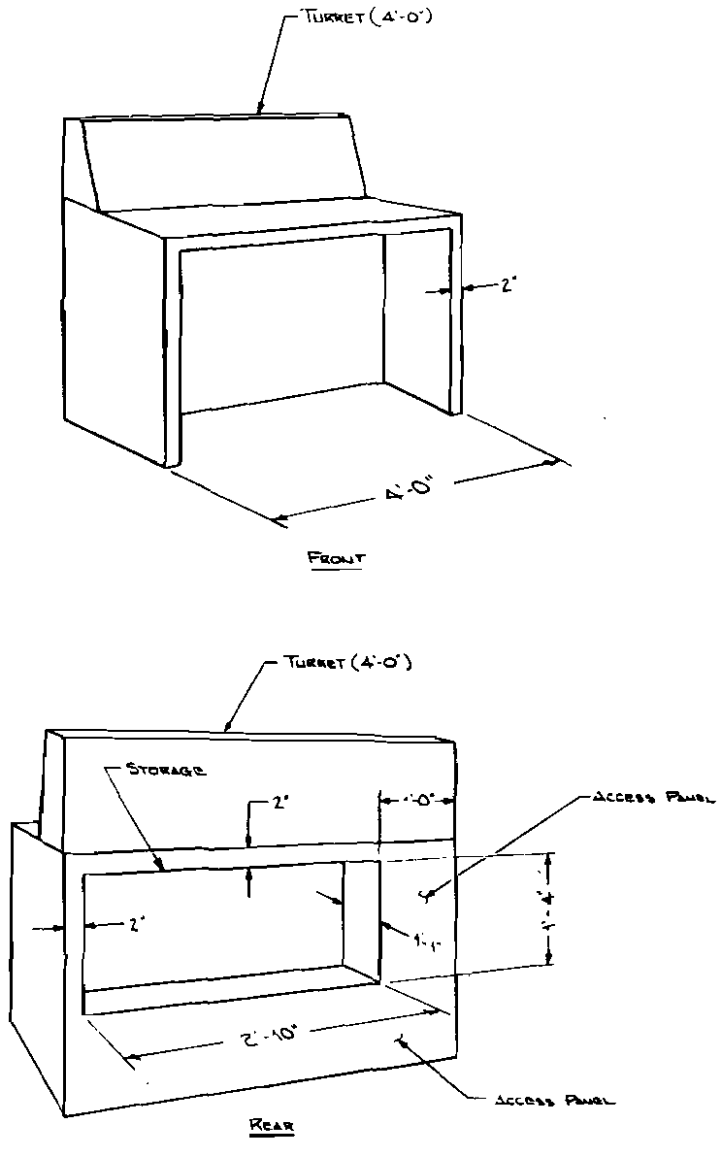

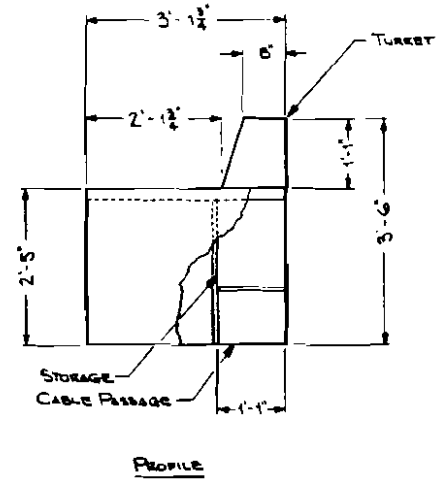

FIGURE 2. 4-FOOT WORK STATION

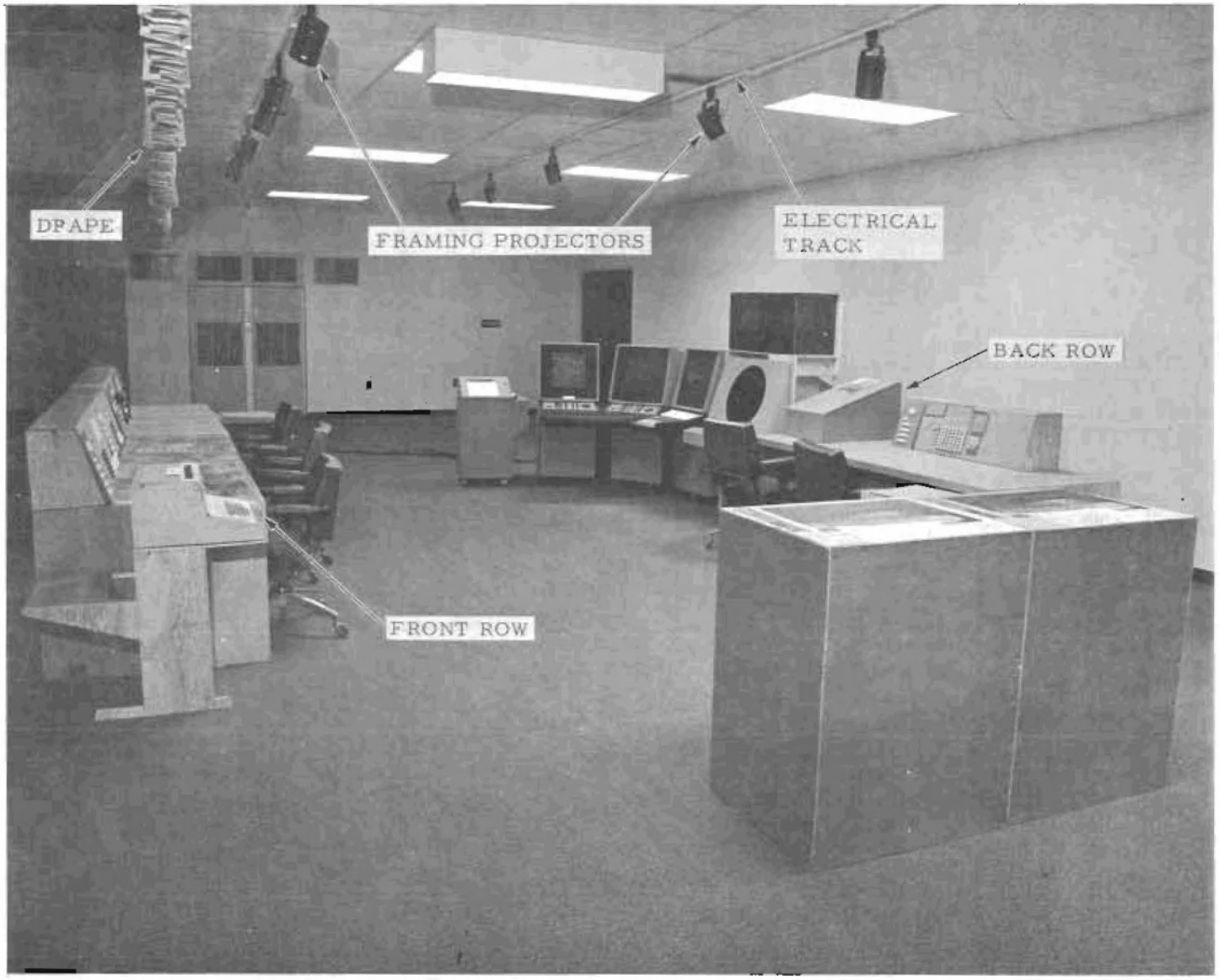

FIGURE 3. "E" COMPLEX MOCK-UP

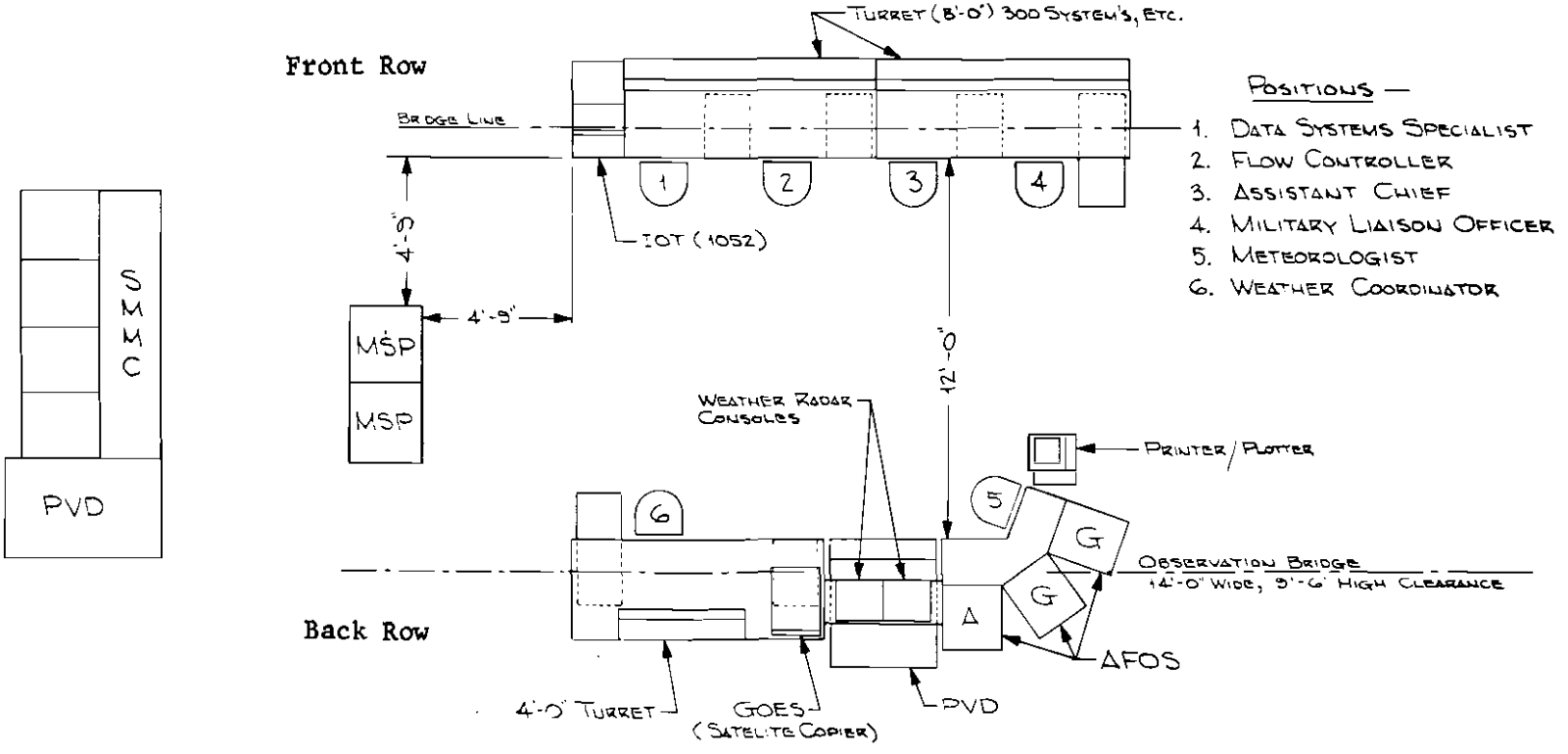

FIGURE 4. KANSAS CITY PLAN VIEW

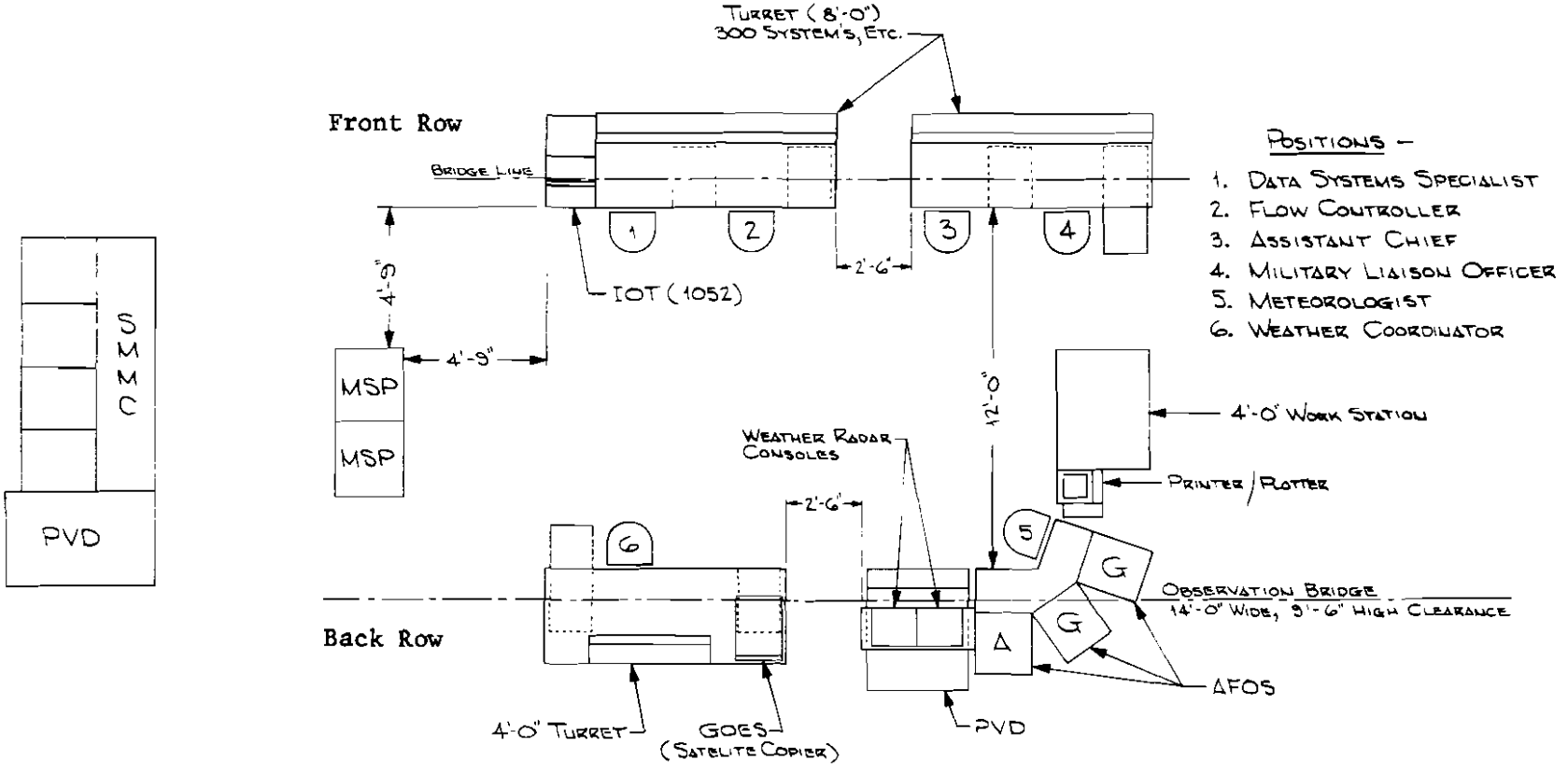

FIGURE 5. KANSAS CITY PLAN VIEW (REVISED)

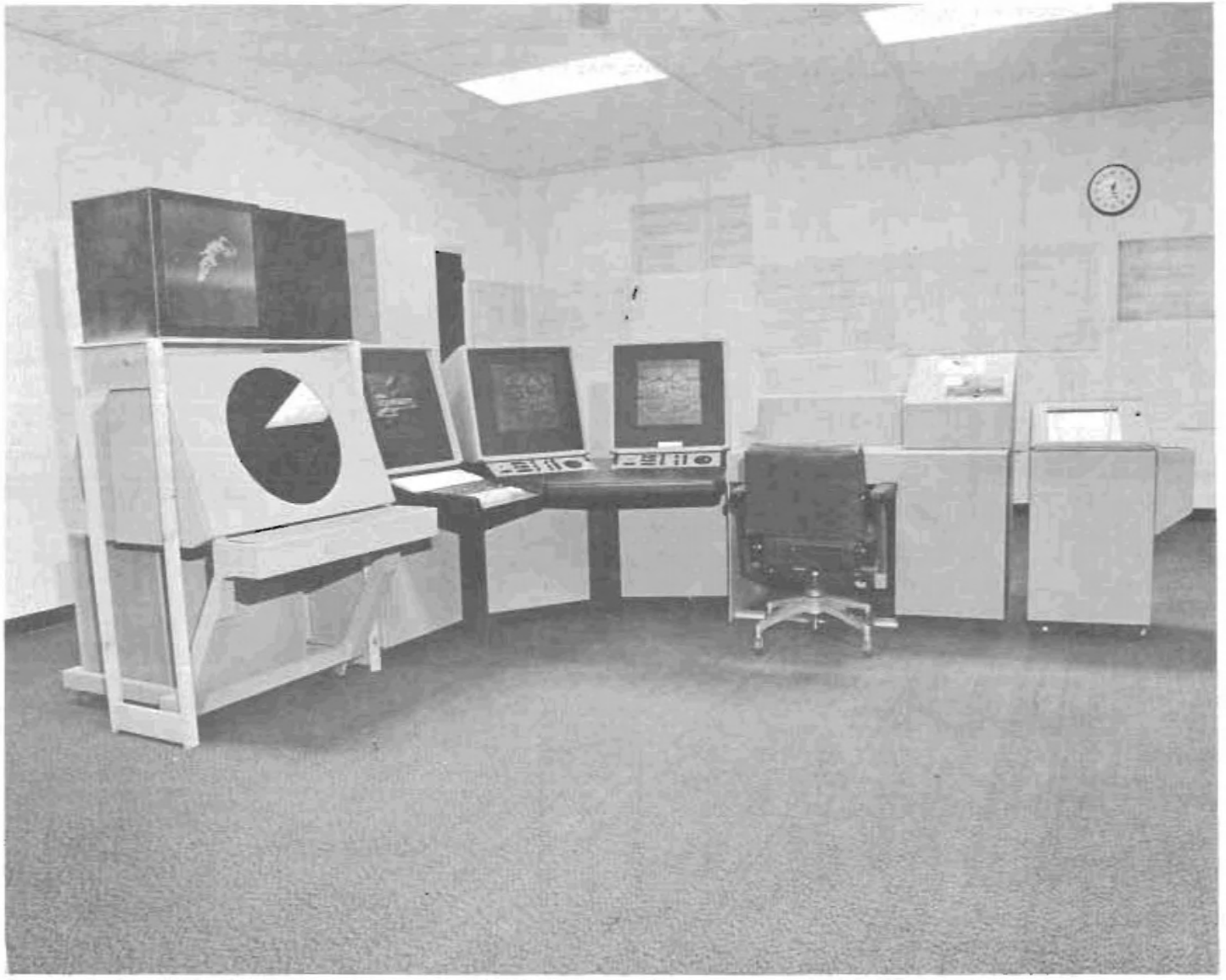

FIGURE 6. METEOROLOGIST/WEATHER COORDINATOR POSITION

7061 - Door Cabinet With Shelf
(Right Or Left Swing)

W=17" D=24" H=27"

Extra Height Inside Swing Door Cabinet Accommodates Two Levels Of Full Size Ring Binders. A Dictation Slide Provides Extra Work Surface.

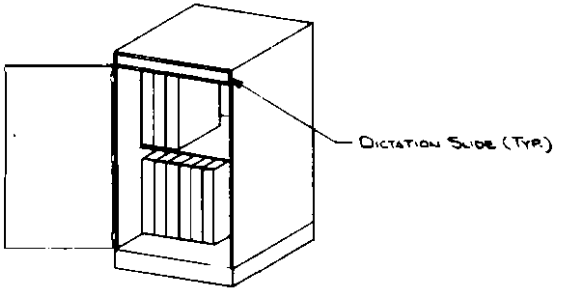

7062 - File Drawer Cabinet
(Letter Or Legal); Dictation Slide; Lock

W=17" D=24" H=27"

File Drawers Are Equipped For Letter And Legal Filing. (Full Depth Letter Filing. Side-To-Side Legal Filing.) Heavy Duty Full Extension Slides.

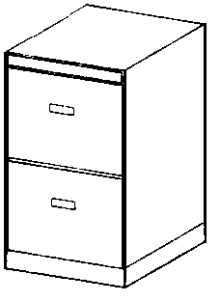

7044 - Typing Return
Accommodates 7065 Stationary Cabinet

W=60" D=17" H=26"

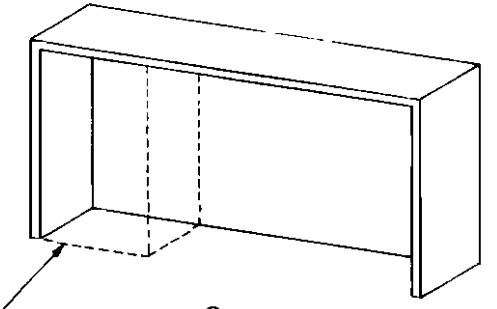

7065 - Stationary Cabinet
Removable Base For Right Or Left Use

W=15" D=15½" H=24"

7063 2 Box 1 File Drawer Cabinet
(Letter Or Legal); Dictation Slide; Lock

W=17" D=24" H=27"

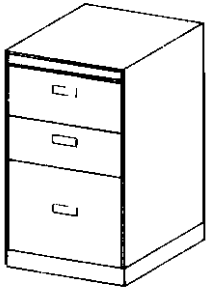

7064 - 4 Box Drawer Cabinet
Dictation Slide; Lock

W=17" D=24" H=27"

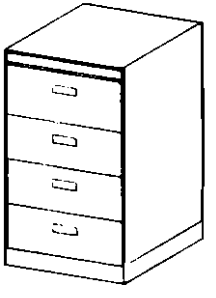

Variable Unit - Custom Designed To Satisfy Field Requirements.

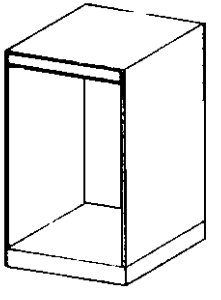

Note: Information From "The Modular Executive Desk System" Harvy Probber Inc., Fall River, Massachusetts

FIGURE 7. DESK PEDESTALS

NOTES: 1. This is a modular system of units - specifically designed for Air Route Traffic Control Center "E" positions - consisting of upper (turret) and lower (storage) sections with various accessory units to allow maxium versatility for each individual position. Upper 8 foot turret sections are available with full turret, left or right side turret only, or no turret writing surface models; a 4 foot model is also available with or without a turret.
2. The framework of this unit is constructed with component parts of the Dorlec Enclosure System, engineering assistance in the usage of Dorlec is also available from Dorlec Corporation, 619 Hollywood Avenue, Cherry Hill, NJ 08002 (609) 662-7117.
3. Unmarked extrusions are 20S and unmarked corners are DLC-512.
4. Unless otherwise noted panels are .09 thk. aluminum sheet held in place with DH-6 captive stud mounting assemblies.
5. Turret section end panels and writing surface front panel are .12 thick aluminum sheet.
6. The turret sections sloped panel is .12 thick aluminum held in place with DH-7 captive nut panel mounting assemblies.
7. The writing surface is .09 thick aluminum with formica or equal bonded.
8. Cable and turret access is provided by removalbe panels with DLH-699 catch lips and DLH-665 - 1/4 turn fasteners.
9. DLH-401 gusset plates are provided for bolting to the floor.
10. Finish: Standard finish; lusterless vinyl color #30372 of federal standard 595
Optional colors available

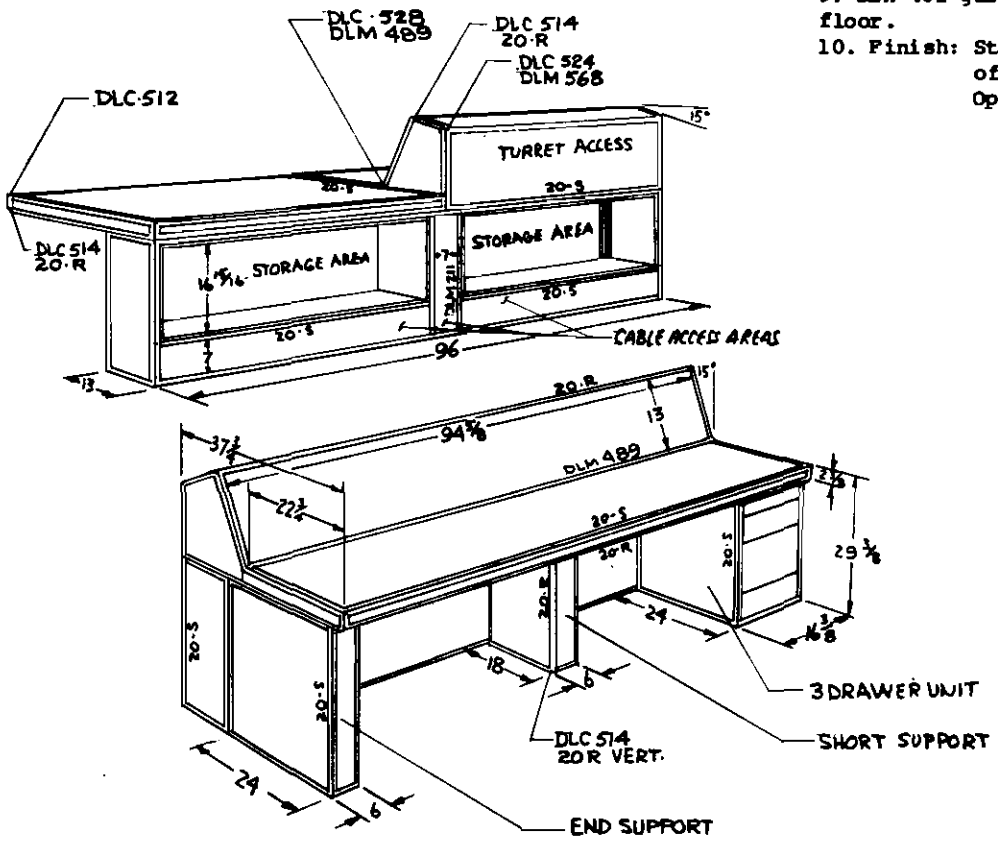

FIGURE 8. DORLEC 8-FOOT WORK STATION

FAA WJH Technical Center
00092426

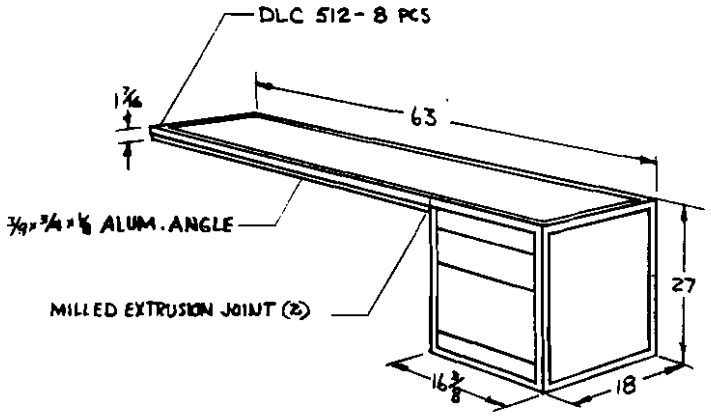

NOTES: 1. This typwriting unit is an accessory for the Air Route Traffic Control Center "E" position modular concept (DC-711).
2. The unit shown has 3 drawers on the right and a model is also available with drawers on the left end.
3. The framework of this unit is constructed with component parts of the Dorlec Enclosure System, available from Dorlec Corporation, 619 Hollywood Avenue, Cherry Hill, NJ 08002.
4. Unmarked extrusions are 20S.
5. Panels are .09 thick aluminum. The side panels and top panel are attached to the unit with DH-6 captive stud panel mounting assemblies. A formica (or equal) writing surface is bonded to the top panel.
6. The rear panel is attached with DH-7 captive nut panel mounting assembliss.
7. No bottom panel is required.
8. Finish: Standard finish; Lutarless vinyl color #30372 of federal standard 595.
Optional colors available.

FIGURE 9. DORLEC TYPEWRITING UNIT

APPENDIX A

AFOS AND OTHER "E" POSITION WEATHER EQUIPMENT

AFOS EQUIPMENT.

AFOS equipment was incorporated into the "E" position design since it is scheduled to replace the present weather teletype and facsimile circuits. The start of AFOS installation in ARTCC's is uncertain, but could be sometime in the early 1980's. AFOS is a program of the NWS designed to automate their weather transmission and display facilities. It will eliminate the time consuming process of handling and filing huge volumes of weather messages and maps presently received on teletype and facsimile machines. Installation of AFOS throughout the NWS system is now in progress and is scheduled to be completed in December of 1980. Ford Aerospace and Communications Corporation (subsidiary of the Ford Motor Company) is the prime contractor.

Weather data for AFOS will be sent over the National Distribution Circuit (NDC), a dedicated full-duplex digital network connecting major NWS Centers and operating units. Smaller units such as airfield weather stations will be connected to the NDC through State Distribution Circuits (SDC's). The NDC/SDC system will have about seven times the capacity of all present teletype and facsimile circuits.

Basic AFOS components to be installed in the ARTCC's are the following:

A. Communication and Data Processing Minicomputers

The communication computer extracts required data from transmitted weather messages and formats data for transmission. The data processing computer updates the data base and interfaces with other AFOS components to display weather information. The two computer units will be mounted in a rack approximately 6 1/2 feet high, 3 feet wide, and 2 feet deep. This rack can be remoted from the AFOS display units by up to 100 feet but should be on the same floor level.

B. Alphanumeric Display Module (ADM)

Figure A-1 shows the ADM and other AFOS components used in the "E" position mockup. The AFOS units are shells loaned by the Ford Aerospace and have simulated displays. The ADM essentially controls the AFOS operating position through the keyboard unit. Alphanumeric data (the present teletype data) is displayed on the ADM on a 15-inch CRT in white on black format. Data is displayed at a rate of 3,000 words per minute (wpm) which is 30 times faster than teletype Service A's 100-wpm speed. Weather charts may be called up through the keyboard unit for display on other units (discussed later). Weather messages may be automatically formatted and transmitted (no tape cutting) and special data requested on a 1-minute-cycle basis. The ADM is approximately 4 1/2 feet high, 2 feet wide, and 3 1/2 feet deep.

C. Graphics Display Module (GDM), see figure A-1

This unit is used primarily to display weather charts that are presently received on facsimile circuits. The weather charts are displayed on a 17-inch CRT (white on black) in 1/4 minute. This is 40 times faster than the 10 minutes required for a facsimile transmission. The GDM has provisions for three independent overlays -- solid, dotted, dashed -- whose intensities can be independently controlled. Two charts can be displayed concurrently such as surface on surface or upper air on surface. There is also a zoom feature whereby selected areas can be enlarged by several ratios up to 25 to 1. Additional data can be plotted and reanalysis performed through the trackball There can be up to three GDM's associated with (and physically connected to) one ADM. In an ARTCC it is expected that two will be sufficient as shown in figure A-1. The GDM has essentially the same dimensions as the ADM.

D. Printer-Plotter Module (PPM), see figure A-1

The PPM is a copying device that can make high legibility black on white copies of any data displayed on a ADM or GDM. Alphanumeric data can be copied at the rate of 300 lines per minute and a weather chart in 1/4 minute. The PPM could be useful in an ARTCC for copying weather message for distribution to controllers and weather charts for briefings. The PPM is approximately 3 feet high, 2 feet wide, and 1 1/2 feet deep.

E. Peripheral Storage Units Each

ARTCC AFOS installations will contain a rigid disk drive and a dual floppy drive. Both of these units will be located in the communication/data processing computer rack. The rigid drive provides high speed storage and retrieval of weather data (including graphics), map backgrounds, and software programs. The floppy drive provides for archival (long term storage) of weather data such as in connection with an aircraft accident.

F. Printer/Keyboard Device (PK)

This unit is used as a system control device, to initiate diagnostic procedures and to print out system error messages. It is located near the computer rack. Its size is about that of a model 35 teletypwriter.

OTHER WEATHER EQUIPMENT.

Other weather equipment associated with the AFOS units are the following:

A. Geostationary Operational Environmental Satellite (GOES) Laser Facsimile Recorder

This unit receives GOES transmissions every 30 minutes providing high legibility pictures of cloud and atmospheric moisture systems. It is approximately 16 inches high, 18 inches wide, and 26 inches long.

B. Remoted Digital Radar Weather Display

This is a 19-inch or 21-inch high resolution CRT color display of digitized radar weather data remoted from a NWS WSR-57 radar. Up to six levels of precipitation intensity in various colors may be shown. An ARTCC may have up to four of these remoted displays.

C. Plan View Display (PVD)

This is the standard ARTCC PVD showing aircraft targets, video maps and Weather and Fixed Map Unit (WFMU) radar weather contours. The WFMU presents two levels of precipitation intensity. Radial lines depict areas with moderate and greater precipitation while H's outline the heavy precipitation or hail areas associated with thunderstorm cores. The "weather position" PVD is shared with the FAA weather coordinator and usually the flow controller.

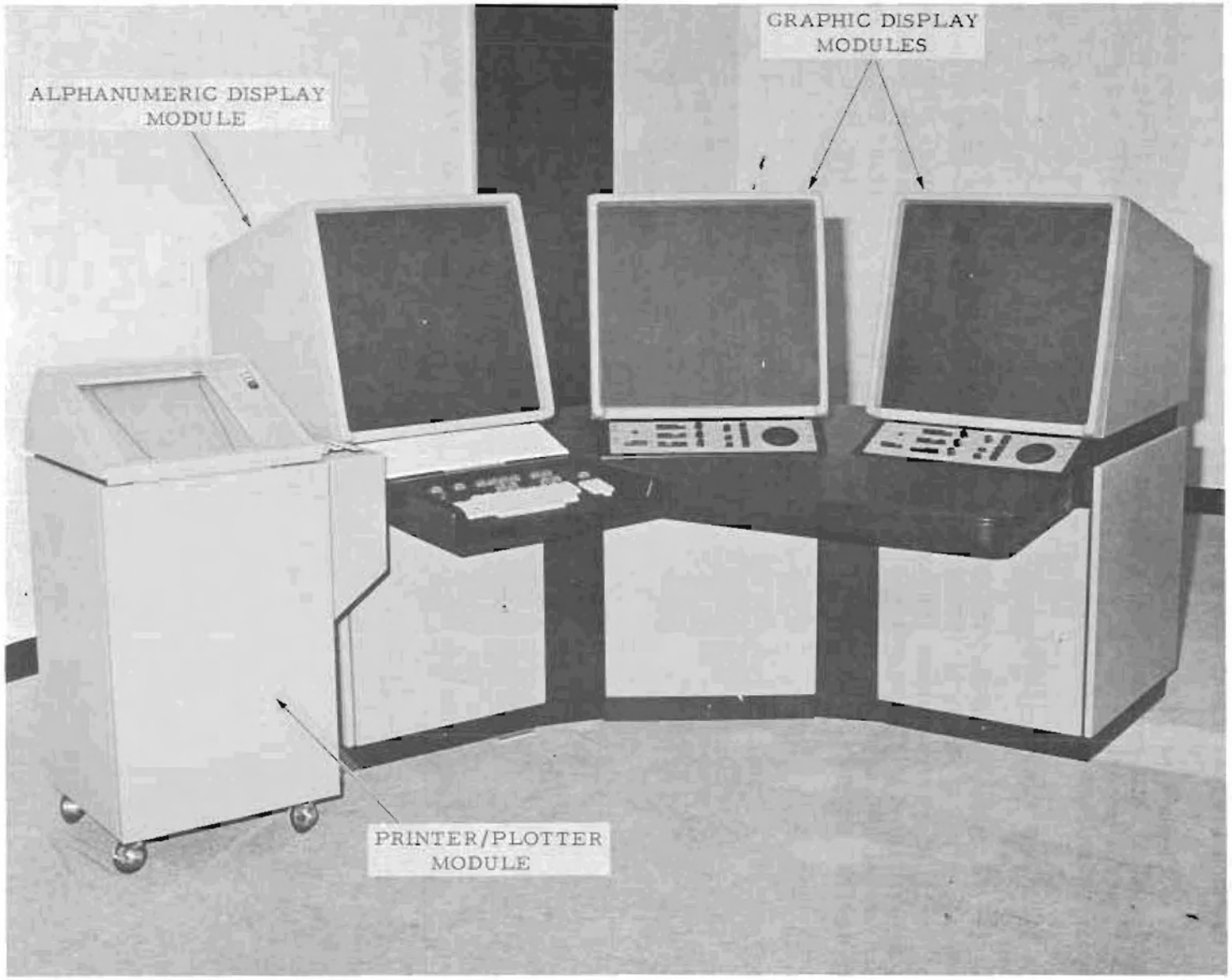

FIGURE A-1. AFOS EQUIPMENT

APPENDIX B

EQUIPMENT REQUIREMENTS FOR "E" COMPLEX POSITIONS

FEDERAL AVIATION ADMINISTRATION

DATE: JAN 17 1978 WASHINGTON, D.C. 20591

IN REPLY REFER TO: AAT-110

SUBJECT: FY-80 National Budget Item to Provide "E" Position Complex at ARTCCs; Ref: Request for R&D Effort #AAT-100-36; your letter dated 12/30/77

FROM: Chief, ATC System Programs Division, AAT-100

TO: AAF-500

The authorized Air Traffic positions in the E-complex area are the Assistant Chief (AC), Data Systems Specialist (DSS), Military Liaison Specialist (MLS); Flow Controller (FC) and Weather Coordinator (WC). A National Weather Service Meteorologist will become part of this complex this year. We do not have a standard arrangement for these positions. We are asking R&D to recommend the most functional arrangement, in 9550, AAT-100-36.

All the above positions require: 1) A PBX with a twelve button call director, dialer, two telephone jacks and cradles; and, 2)* A 300 system with twelve modules of six keys each, two commmon function modules, speaker, and two telephone jacks and cradles.

Additional required equipment is listed by position.

Assistant Chief

3. Clock

4. Typewriter.

Flow Controller

2. A speaker for Central Flow, added to above item 2* equipment.

3. Clock

4. Typewriter

5. Flight Strip Printer

6. 1052 IOT (Input-Output Typewriter)

7. Strip Bays.

8. PVD (Plan View Display)

9. Telecopier.

Data Systems Specialist

3. Clock

Data Systems Specialist, continued.

4. 1052 IOT (Input-Output Typewriter)

5. Typewriter

6. Flight Strip Printer.

Military Liaision Specialist

3. Clock

4. Autovon

5. Classified Material Disposal.

6. Safe.

Weather Coordinator

3. Clock

4. Typewriter

5. PVD (Plan View Display)

National Weather Service (NWS) Meteorologist

3. Satellite Photo Recorder

4. Weather Bureau Radar Receiver (WBRR)

5. Facsimile Equipment for Receiving NWS Radar Pictures

6. Drop on the National Facsimile Circuit (NAFAX)

7. NAFAX Facsimile Receiver.

If additional information is required, contact Helen Parke, AAT-110 ext. 68760.

Chas. H. Newpol

CHARLES H. NEWPOL

APPENDIX C

"E" COMPLEX EVALUATION QUESTIONNAIRE ANALYSIS

METHOD.

Letters were sent by Air Traffic (AAT-110), Washington Headquarters to the Regional Air Traffic Offices requesting that personnel evaluate the "E" complex mockup at NAFEC. Eight regions were able to support the request. The other regions were restricted by travel-money limitations and work requirements.

A. Data Collection

Subjective data was collected on the overall "E" complex configuration and individual position design by means of a questionnaire. (Figure A-1 shows the two-page Questionnaire form used to score the data.) The evaluation took place from June to August, 1978. The form also requested comments.

The questionnaire was divided into four parts. The top part of the survey asks for background information on the evaluator, the next two parts for scoring of the overall "E" complex configuration and individual position design. The forth part was for comments. A summary of scores by each evaluator is shown in Table C-1 by regional and center personnel. Regional personnel are identified by the letter "A" followed by the region abbreviation and branch. Center personnel are identified by the letter "Z" followed by center abbreviation and position.

B. Data Analysis

The evaluator's scores were tallied and subjected to a nonparametric data analysis (see reference 1) to determine whether or not there existed a significant consensus of "+" or "-" s. The number of "+" and "-" entries were used for the analysis. The number of unanswered questions and "0" were not considered. The data sets for each region and the summary consensus of each question were analyzed using the binomial sign test (reference 1, pg 68). In the present case, the assumption is that the respondents are equally likely to answer "+" or "-". (The number of respondents in each data set corresponds to the number of heads or tails occurring during a given number of tosses of a fair coin, p (heads) = .5.) If there is a sufficient excess of one answer over the other, then the difference is considered to indicate a significant consensus (+ or -) among the evaluators in that data set. Confidence intervals were set at the standard of alpha = .05 for test by regional scores and .20 for scores of each question by all evaluators. The decrease in alpha to .20 level was to insure that a consensus of "+" or "-" was present.

Reference

1. Siegel, S., Nonparametric Statistics for the Behavioral Sciences, McGraw-Hill, 1956.

With alpha = .05, it implies that if the hypothesis were true so unusual a sample could be expected less than 5 per cent of the time. Thus by decreasing alpha to .20 level, we lessen the chance of not accepting a true hypothesis. A statistical hypothesis is some assertion about a population which may, or may not, be capable of verification. The hypothesis (null) for the test was: no difference existed between the number of "+"s or "-"s selected.

C. Results

Associated with each region score is the total number of "+" and "-"s', with the computed Z score. Testing the Z score established at $\geq \pm$ 1.96 determines the consensus of "+" or "-"s for alpha of .05. The significance is denoted by "S" with the associated consensus sign, as "+" or "-." No significance is denoted by N.S.

Total Evaluation by Question tallies the results under the scores for each question. Z was set at $\geq \pm$ 1.29 with alpha at .20, S., and N.S. are listed under the Z score for each question with the appropriate sign for S. values.

QUESTIONNAIRE

EVALUATION OF ARTCC "E" POSITION CONFIGURATIONS
PROJECT 122-111-610 "E" POSITION DESIGN

PREPARED BY: _____ TITLE: _____

CENTER: _____ REGION: _____ OTHER: _____ DATE: _____

NOW THAT YOU HAVE INSPECTED THE "E" POSITION MOCKUP, PLEASE COMPLETE THE FOLLOWING QUESTIONNAIRE. IN RESPONDING TO THE ITEMS LISTED, CONSIDER ITS VALUE FOR INSTALLATION AT THE CENTER OR CENTERS WHICH YOU REPRESENT.

IN THE BLANK SPACE FOLLOWING EACH ITEM, PLACE ONE OF THE FOLLOWING 3 VALUES MOST CLOSELY MATCHING YOUR OPINION:

+1 = GOOD, IMPROVEMENT COMPARED TO EXISTING.
0 = FAIR, NO IMPROVEMENT COMPARED TO EXISTING.
−1 = POOR, UNSATISFACTORY COMPARED TO EXISTING.

MAKE SURE YOU USE A PLUS IP THE ITEM IS BETTER THAN FAIR AND A MINUS IF THE ITEM IS WORSE THAN FAIR. IF YOU RATE ANY ITEM(S) WORSE THAN FAIR PLEASE BRIEFLY DESCRIBE THE PROBLEM AND ANY SUGGESTIONS FOR IMPROVEMENT ON SHEET #2.

I. OVERALL "E" COMPLEX CONFIGURATION

1. PHYSICAL LAYOUT ..... _____
2. INGRESS/EGRESS ..... _____
3. LIGHTING ..... _____

II. INDIVIDUAL POSITION DESIGN

1. DESK HEIGHT ..... _____
2. STORAGE (DRAWER SPACE) ..... _____
3. TURRET ARRANGEMENT ..... _____
4. BOOKSHELF/FILE ACCESS ..... _____
5. DESK LIGHTING
   a. CEILING MOUNTED FLUORESCENTS ..... _____
   b. TURRET MOUNTED FLUORESCENTS ..... _____
   c. OVERHEAD FRAMING LIGHTS ..... _____
6. 1052 IOT LOCATION
   a. DESK MOUNTED ..... _____
   b. PEDESTAL MOUNTED (AISLE) ..... _____
7. MANUAL TYPEWRITER LOCATION
   a. DESK MOUNTED ..... _____
   b. PEDESTAL MOUNTED (AISLE) ..... _____

Originator	Date	Quantity	APPROVED
ANA-110	6/78	500	FORM

SHEET NO. 2

8. AFOS LOCATION .....

COMMENTS

I.

II.

TABLE C-1. EVAJ

Region/Branch or Center Position	Question Number I 1	2	3	II 1	2	3	4	5a	b	c	6a	b	7a	b	8	Total +	0	−	*	Test
																				Z = >+1.96 α = .05
Eastern																				
AEA 432	−	+	+	+	+	+	+	0	−	+	−	+	−	+	+	10	1	4	0	
510	+	0	0	+	+	−	0	*	*	*	+	*	*	*	*	5	3	1	6	
ZDC AC	+	+	+	+	−	0	−	−	−	+	−	+	−	+	*	7	1	6	1	S. "+"
AO	+	+	+	+	0	0	−	+	0	+	−	0	−	−	*	6	4	4	1	
AS	+	+	+	+	0	0	−	0	0	+	−	0	−	−	*	5	5	4	1	
C	+	+	+	+	+	0	0	0	−	+	*	*	−	−	*	6	3	3	3	
ZNY AC	+	0	0	+	−	0	+	*	−	+	+	*	−	+	*	6	3	3	3	
AS	+	0	0	+	−	0	+	*	−	+	+	−	−	+	*	6	3	4	2	
																51	23	29	17	
Central																				
ACE 510	+	+	−	+	0	0	+	−	−	−	0	0	+	0	+	6	3	4	0	Z = 0.32 N. S.
Great Lakes																				
AGL 457	−	0	+	+	−	0	+	−	−	+	+	−	+	−	+	7	2	6	0	Z = 0
457	+	0	+	+	*	+	+	0	−	+	0	−	+	−	+	8	3	3	1	
512.5	+	−	+	0	+	0	0	0	−	+	0	−	0	−	−	4	6	5	0	N. S.
ZMP AO	−	−	0	0	−	0	−	−	−	*	−	−	0	−	*	0	4	9	2	
ZOB AC	+	0	+	+	0	+	+	0	+	+	0	−	0	−	−	7	5	3	0	
																26	20	26	3	
New England																				
ANE 422	+	0	+	+	−	0	−	0	*	+	−	+	−	+	+	7	3	4	1	Z = 0.80
4226	0	0	+	+	0	0	−	0	0	+	0	*	+	0	0	4	9	1	1	N. S.
ZBW AO	0	0	−	+	−	0	+	+	−	+	−	0	−	0	0	4	6	5	0	
																15	18	10	2	
Rocky Mountain																				
ARM 513	+	0	−	+	0	−	−	0	*	0	0	+	0	+	+	5	6	3	1	Z = 0.35 N. S.
Southern																				
ASO 510	+	+	+	+	−	+	0	*	*	+	+	*	+	*	−	8	1	2	4	Z = 5.66
ASO 510	+	+	+	*	*	+	+	*	*	+	+	*	+	*	+	9	0	0	6	
ZJX AO	+	0	+	+	0	0	0	0	−	+	0	+	0	+	+	7	7	1	0	S. "+"
ZMA AO	+	+	+	+	*	0	*	−	+	0	0	+	0	+	+	8	4	1	2	
ZME AC	+	+	+	+	0	+	+	*	*	+	0	0	0	0	0	7	6	0	2	
ZTL AO	+	+	+	+	+	+	0	+	−	−	+	*	+	*	+	10	1	2	2	
																49	19	6	16	
Southwestern																				
ASW 433	+	+	0	+	+	*	0	0	+	+	0	+	0	+	+	9	5	0	1	Z = 4.48
460	+	*	+	+	+	+	*	*	*	+	+	*	*	*	*	7	0	0	8	
516	+	0	0	+	0	0	*	0	+	*	0	+	+	+	0	6	7	0	2	S. "+"
																22	12	0	11	
Western																				
ZOA AS	+	+	+	0	+	+	+	+	−	+	−	+	+	+	*	11	1	2	1	Z = 3.60
SE	+	0	+	+	+	+	0	+	*	+	+	+	+	+	−	11	2	1	1	S. "+"
																22	3	3	2	

TOTAL EVALUATION BY QUESTION

		I 1	2	3	II 1	2	3	4	5a	b	c	6a	b	7a	b	8
Total	+	24	13	20	25	9	10	11	5	4	22	9	10	10	12	12
	0	2	13	6	3	9	16	8	12	3	2	11	5	8	4	4
	−	3	2	3	0	8	2	7	5	14	2	8	6	9	8	4
	*	0	1	0	1	3	1	3	7	8	3	1	8	2	5	9
																Z = >+1.29 α = .20
	Z	3.85	2.58	3.34	4.8	.0	2.02	.71	.0	2.12	3.88	.0	.75	.0	.17	1.75
		S +	S +	S +	S +	NS	S +	NS	NS	S −	S +	NS	NS	NS	NS	S +

ZDC = Washington Center
ZOB = Chicago Center
ZMA = Miami Center
ZOA = Oakland Center
AS = Area Specialist
ZNY = New York Center
ZBW = Boston Center
ZME = Memphis Center
AO = Area Officer
SE = System Engineer
* = No Answer
ZMP = Minneapolis Center
ZJX = Jacksonville Center
ZTL = Atlanta Center
AC = Assistant Chief
C = Chief

APPENDIX D

NA-78-60-LR

Distribution:

AAF-1	
AAF-440	
AAF-550	(10 copies)
AAL-1	
AAL-500	
AAL-510	
AAT-100	
AAT-110	(10 copies)
ACE-1	
ACE-500	
ACE-510	
AEA-1	
AEA-500	
AEA-510	
AED-1	
AEM-1	
AEM-11	
AEU-1	
AFSFO-824	
AGL-1	
AGL-500	
AGL-510	
ANA-1	
ANA-2	(2 copies)
ANA-4	(2 copies)
ANA-5	
ANA-64	(3 copies)
ANA-64B	
ANA-100	
ANA-200	
ANA-300	
ANA-400	
ANA-500	
ANA-600	
ANA-700	
ANE-1	
ANE-500	
ANE-510	
ANW-1	
ANW-500	
ANW-510	
APC-1	
APC-500	
APC-510	
ARD-1	
ARD-50	
ARD-53	
ARD-54	
ARD-100	
ARD-110	(10 copies)
ARM-1	
ARM-500	
ARM-510	
ASO-1	
ASO-500	
ASO-510	
ASW-1	
ASW-500	
ASW-510	
ATF-1	
AWE-1	
AWE-500	
AWE-510	
AWE-521	
ZAB	(2 copies)
ZAN	" "
ZAU	" "
ZBW	" "
ZDC	" "
ZDV	" "
ZFW	" "
ZHN	" "
ZHU	" "
ZID	" "
ZJX	" "
ZKC	" "
ZLA	" "
ZLC	" "
ZMA	" "
ZME	" "
ZMP	" "
ZNY	" "
ZOA	" "
ZOB	" "
ZSE	" "
ZSU	" "
ZTL	" "