116

FAA WJH Technical Center
00092513

COPY 3

NAFEC TECHNICAL LETTER REPORT

NA-79-27-LR

NA-79-27-LR

79/27 LR

DESIGN GUIDELINES FOR TRACAB VERTICAL BLACKOUT SHADES

NAFEC
LIBRARY
FEB 2 '78

by Donald M. Millar
William Lewis

FEDERAL AVIATION ADMINISTRATION
NATIONAL AVIATION FACILITIES EXPERIMENTAL CENTER
Atlantic City, New Jersey 08405

NOTICE

This document is disseminated to provide for quick reaction release of technical information to selected users. The contents may not conform to FAA formal publication standards and the technical information is subject to change and/or incorporation into a formal publication at a later date.

Approved by _____

JOSEPH M. DEL BALZO
Acting Director, National Aviation Facilities
Experimental Center
Federal Aviation Administration
Department of Transportation

ABSTRACT

Design guidelines were developed for the installation of vertical blackout shades to alleviate glare and fluorescing phenomena caused by sunlight on and around console-mounted BRITE radar displays in Air Traffic Control Tower Cabs. Experimental shades were installed in the Gulfport, Mississippi, Tower Cab and were subjected to a 60-day evaluation. Results demonstrate that vertical blackout shades can eliminate adverse working conditions attributable to sunlight at the radar approach control position(s).

TABLE OF CONTENTS

	Page
INTRODUCTION	1
Purpose	1
Background	1
DISCUSSION	1
Design Procedures	3
RECOMMENDATIONS	6
APPENDIX	
DISTRIBUTION	

LIST OF ILLUSTRATIONS

Figure		Page
1	Plan View of Gulfport Tower	2
2	BRITE Radar Sunlight Shielding	4
3	Vertical Blackout Shade Installation--Gulfport Tower	5

INTRODUCTION

PURPOSE.

The purpose of this effort was to develop a solution to adverse glare and fluorescing phenomena caused by sunlight on and around two console-mounted BRITE IV radar displays at the Gulfport, Mississippi, terminal radar approach control cab (TRACAB).

BACKGROUND.

Use of two BRITE IV displays at the radar approach control positions in the Gulfport TRACAB was hampered during late afternoon due to sunlight shining through the west windows, reducing contrast on the cathode-ray tubes (CRT's) and making them marginally usable, even with standard smoke-grey transparent window shades in use. The Southern Region requested that the National Aviation Facility Experimental Center (NAFEC) participate in an investigation to alleviate this problem. This request was implemented under the NAFEC sustaining engineering program.

DISCUSSION

A solution to the sunlight problem was proposed following inspection of conditions within the TRACAB by Gulfport Tower and NAFEC personnel on June 13, 1978. The recommended approach involved mounting a series of retractable shades vertically from the cab ceiling, the lower portion of each shade to be opaque, while the remainder would consist of clear plastic. The purpose of having a series of shades was to allow for selection of shades as required for sunlight blockage during seasonal variation in sun azimuth.

The inclusion of clear plastic in the upper part of each shade was to provide a transverse viewing area for tower personnel. Subsequent evaluation of the experimental shade installation demonstrated that the clear plastic section provided no significant benefits or use at Gulfport. However, this feature should be considered in the design of shade installations within other TRACAB's, particularly in regards to the local control position in relationship to the shade(s) location.

Figure 1 details the installation of the three shades as located in the Gulfport TRACAB, each of which was fabricated 48 inches wide with the bottom 30 inches consisting of black Tontine material joined to 54 inches (minimum) of clear plastic with sufficient clear plastic rollup at the top (8 inches) to insure proper operation. The shades are mounted on standard spring-operated rollers attached to 1- by 4-inch wood plates for ceiling mounting. The shades were centrally located within the tower in order to minimize field-of-view interference, particularly in regards to local control. Angular positioning of the shades within the tower was primarily determined by the azimuth of the sun

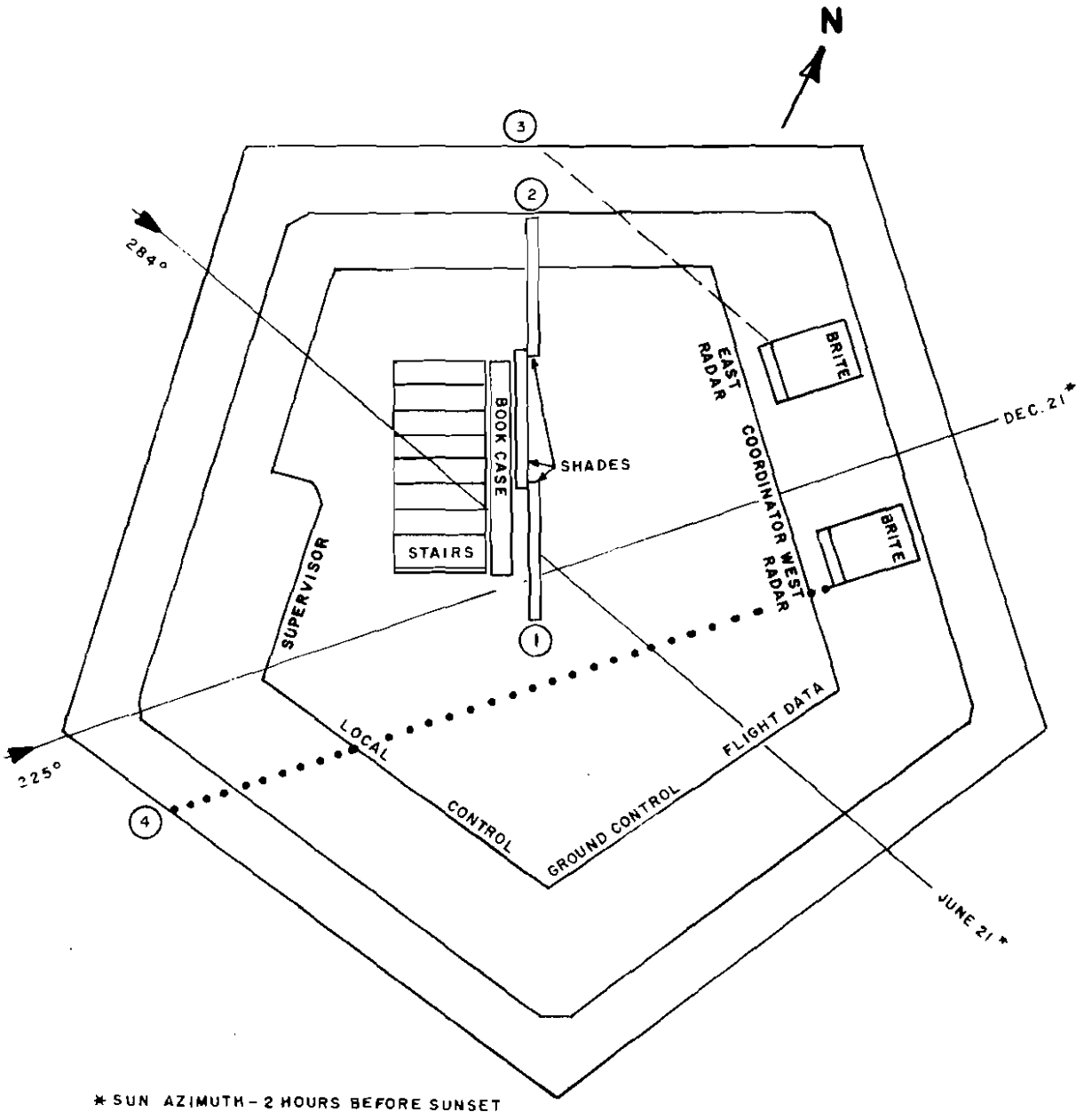

FIGURE 1. PLAN VIEW OF GULFPORT TOWER

during late afternoon hours and the East-West radar positions as shown in figure 1. The appendix contains an illustrative example for computing sun azimuth.

For evaluation purposes, the West radar was not fully shielded during the winter months by the experimental installation in order to compare this position with benefits obtained at the East radar position. Figure 2 is a photograph taken on January 16, 1979, during overcast cloud conditions, and illustrates the improvement in protection from sun glare obtained with all shades in the lowered position. Figure 3 is a photograph of the three shades as mounted within the tower cab.

Following the evaluation period, two additional shades were ordered for installation; a 4-foot-wide shade for installation at the location designated as ① in figure 1 to provide complete shielding during the winter months for the West radar position; and a 5-foot-wide shade with a 15° bias cut along the right edge for installation at ② in figure 1 to improve shielding during the summer months. The 15° bias cut was included to allow the shade to meet the window glass.

DESIGN PROCEDURES.

Facilities experiencing adverse glare and fluorescing phenomena induced through sunlight on or around BRITE displays should consider the use of some form of vertical blackout shades to alleviate this condition. Initial design entails the determination of angular relationships between BRITE radar location(s) and sun azimuth for June 21 and December 21 during the affected time of day. The preparation of a plan view of the tower similar to figure 1 will allow for the determination of shielding requirements. In the Gulfport example, the dashed line ③ parallel to the 284° azimuth delineates maximum summer limits, while the dotted line ④ parallel to the 225° azimuth shows maximum winter limits.

In order to minimize interference between personnel movement in the tower and the shades, a compromise location for the shades may be expedient. This was done with the final installation at Gulfport by placing the shades adjacent to and in line with the staircase/bookshelf. Complete shielding of the East radar will not be attained during the week before and after June 21.

Selection of partial or full-length blackout shades is dependent on position arrangement of the tower cab and field of view requirements. Interference with airport operations will either preclude installation of blackout shades or will result in marginal benefits. Any proposed installation should provide complete shielding for affected BRITE displays for 80 percent of the year prior to initiating procurement of shades.

FIGURE 2. BRITE RADAR SUNLIGHT SHIELDING

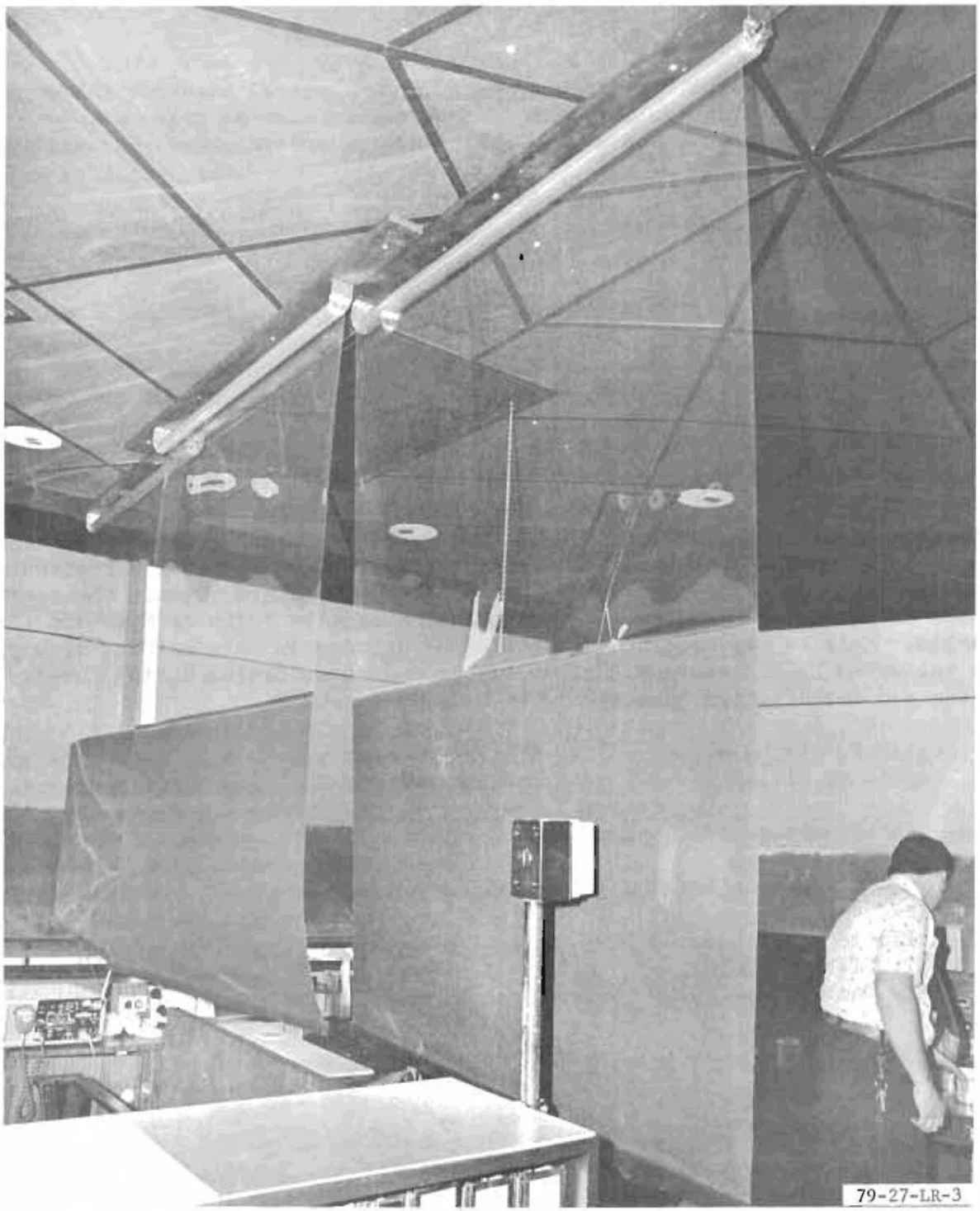

FIGURE 3. VERTICAL BLACKOUT SHADE INSTALLATION--GULFPORT TOWER

RECOMMENDATION

Based on project results, it is recommended that vertical blackout shades be considered for installation in TRACABS experiencing adverse glare and fluorescing phenomenal on and around BRITE radar displays caused by sunlight.

This effort was conducted in response to a formal request from ASO-510, dated May 1, 1978, to ANA-4 for assistance under the Terminal Sustaining Engineering Program, Subprogram 144-170, sponsored by ARD-120, Richard Simon. The project number is 144-170-820 and the NAFEC Program Manager is Felix F. Hierbaum, Jr., ANA-210. This report concludes scheduled activities on this effort, although the following NAFEC personnel are available for consultation during future design and installation phases:

Felix F. Hierbaum, Jr.	Program Manager
Donald M. Millar	Project Manager

These individuals can be contacted at:

ATC Applications Branch, ANA-210
NAFEC
Atlantic City, N.J. 08405
Tel. FTS: 346-2630
Tel. Com: 609-641-8200 X-2630

APPENDIX

DETERMINATION OF THE SUN'S TRUE AZIMUTH FOR THE TIME OF SUNSET AND SUNRISE FOR THE DAYS OF WINTER AND SUMMER SOLSTICE

The true azimuth of the sun for the time of sunset and sunrise for the days of winter and summer solstice can be determined by use of "The Air Almanac" (reference 1) and "Sight Reduction Tables for Air Navigation" (reference 2). The procedure is outlined below and an illustrative example given. The procedure also applies to the determination of the sun's true azimuth at any time on any date.

FROM THE AIR ALMANAC

1. Determine the Greenwich mean time (G.m.t.) of sunset/sunrise for the winter solstice (about December 21) or summer solstice (about June 21) as desired, from the appropriate table. (Figure A-1 shows the December table.) Interpolate the time for your latitude using the December 22/June 22 column. Convert your longitude to time using the "conversion of arc to time" table (figure A-2). If in west longitude, add the time conversion to the G.m.t. to get the G.m.t. of sunset/sunrise for your longitude. (For east longitudes, the time conversion is subtracted from G.m.t.). If the value is over 24, subtract 24 from it. If negative, add 24 to it. If you want to determine the local time of sunset/sunrise in west longitudes, subtract the number of hours between local time and Greenwich from G.m.t. Add if in east longitudes.

2. Enter the page listing for December 21/June 21 for the G.m.t. of sunset/sunrise as determined for your longitude and extract the Greenwich Hour Angle (GHA) and Declination (Dec) of the sun. (Figure A-3 shows the December 21 listing). Interpolate as required. Subtract your west longitude from the GHA of the sun (add east longitude) to determine the Local Hour Angle (LHA) of the sun. Round this to degrees LHA.

FROM THE SIGHT REDUCTION TABLES.

3. Enter the table for your nearest latitude (figure A-4 shows 30° N) with the rounded LHA and closest (rounded) declination. If both latitude and declination are north (or south) use "same name as latitude" portion; otherwise use "contrary name portion." Extract the listed azimuth ($\bar{Z}$), then convert this to true azimuth (Z_n) as indicated in the upper left-hand corner of the table. The true azimuth will be accurate to within 1° with this procedure. Greater accuracy can be achieved by interpolating between latitude tables, LHA's and declinations.

SUNRISE

Lat.	November 19	22	25	28	December 1	4	7	10	13	16	19	22	25	28	31	Jan. 3
	h m	h m	h m	h m	h m	h m	h m	h m	h m	h m	h m	h m	h m	h m	h m	h m
N 72	—	—	—	—	—	—	—	—	—	—	—	—	—	—	—	—
70	10 14	10 40	11 19	—	—	—	—	—	—	—	—	—	—	—	—	—
68	09 30	09 45	10 00	10 16	10 33	10 52	11 14	—	—	—	—	—	—	—	—	—
66	09 01	09 12	09 23	09 34	09 45	09 55	10 05	10 14	10 22	10 28	10 32	10 35	10 35	10 33	10 30	10 25
64	08 39	08 48	08 57	09 06	09 15	09 23	09 30	09 36	09 42	09 47	09 50	09 52	09 53	09 52	09 51	09 48
62	21	29	37	08 45	08 52	08 59	09 05	09 10	09 15	09 19	22	24	24	24	23	22
N 60	08 07	08 14	08 21	08 28	08 34	08 40	08 45	08 50	08 54	08 58	09 00	09 02	09 03	09 03	09 03	09 01
58	07 54	08 01	08 07	13	19	24	29	33	37	40	08 43	08 45	08 46	08 46	08 46	08 45
56	43	07 49	07 55	08 01	08 06	08 11	15	19	23	26	28	30	31	32	32	31
54	34	40	45	07 50	07 55	07 59	08 03	08 07	08 10	13	15	17	19	19	19	19
52	26	31	36	40	45	49	07 53	07 56	07 59	08 02	08 04	08 06	08 07	08 08	08 08	08 08
N 50	07 18	07 23	07 28	07 32	07 36	07 40	07 43	07 47	07 50	07 52	07 54	07 56	07 57	07 58	07 59	07 58
45	07 02	07 06	07 10	07 14	17	21	24	27	29	32	34	35	37	38	38	38
40	06 49	06 53	06 56	06 59	07 02	07 05	07 08	07 10	07 13	15	17	18	20	21	22	22
35	38	41	44	46	06 49	06 52	06 54	06 57	06 59	07 01	07 03	07 04	07 06	07 07	07 08	07 08
30	28	30	33	35	38	40	43	45	47	06 49	06 50	06 52	06 53	06 54	06 55	06 56
N 20	06 11	06 13	06 15	06 16	06 18	06 20	06 22	06 24	06 26	06 28	06 29	06 31	06 32	06 33	06 35	06 36
N 10	05 56	05 57	05 58	06 00	06 01	06 03	06 04	06 06	06 07	06 09	06 10	06 12	06 13	06 15	06 16	17
0	42	42	43	05 44	05 45	05 46	05 48	05 49	05 50	05 52	05 53	05 55	05 56	05 58	05 59	06 01
S 10	28	28	28	28	29	30	31	32	33	34	35	37	39	40	42	05 43
20	05 12	05 12	05 11	05 11	05 12	05 12	05 13	05 13	05 14	05 15	05 17	05 18	05 20	05 21	23	25
S 30	04 54	04 53	04 52	04 52	04 51	04 51	04 51	04 52	04 52	04 53	04 55	04 56	04 58	04 59	05 01	05 03
35	44	42	41	40	39	39	39	39	40	41	42	43	45	46	04 48	04 51
40	32	30	28	27	26	25	25	25	25	26	27	28	29	31	34	36
45	18	04 15	04 13	04 11	04 09	04 08	04 07	04 07	04 07	04 08	04 08	04 10	04 11	04 13	04 16	04 19
50	04 00	03 57	03 54	03 51	03 49	03 47	03 46	03 45	03 45	03 45	03 46	03 47	03 49	03 51	03 54	03 57
S 52	03 52	03 48	03 45	03 42	03 39	03 37	03 36	03 35	03 34	03 34	03 35	03 36	03 38	03 40	03 43	03 46
54	43	39	35	31	29	26	24	23	22	22	23	24	26	28	31	34
56	32	28	23	19	16	03 13	03 11	03 09	03 09	03 08	03 09	03 10	03 12	03 14	17	21
58	21	15	03 10	03 06	03 02	02 58	02 55	02 53	02 52	02 52	02 52	02 53	02 55	02 57	03 01	03 05
S 60	03 06	03 00	02 54	02 49	02 44	02 40	02 37	02 34	02 32	02 31	02 31	02 32	02 34	02 37	02 41	02 45

SUNSET

Lat.	November 19	22	25	28	December 1	4	7	10	13	16	19	22	25	28	31	Jan. 3
	h m	h m	h m	h m	h m	h m	h m	h m	h m	h m	h m	h m	h m	h m	h m	h m
N 72	—	—	—	—	—	—	—	—	—	—	—	—	—	—	—	—
70	13 15	12 51	12 13	—	—	—	—	—	—	—	—	—	—	—	—	—
68	14 00	13 47	13 33	13 19	13 04	12 47	12 27	—	—	—	—	—	—	—	—	—
66	29	14 19	14 10	14 01	13 52	13 44	13 37	13 30	13 26	13 22	13 21	13 21	13 24	13 29	13 35	13 43
64	14 51	14 43	36	29	14 22	14 17	14 12	14 08	14 05	14 04	14 03	14 04	14 06	14 10	14 15	14 21
62	15 09	15 02	14 56	14 50	14 45	14 41	37	34	32	31	32	33	35	38	14 42	14 47
N 60	15 23	15 18	15 12	15 08	15 03	15 00	14 57	14 55	14 54	14 53	14 53	14 55	14 57	14 59	15 03	15 07
58	36	31	26	22	19	16	15 13	15 12	15 11	15 10	15 11	15 12	15 14	15 17	20	24
56	46	42	38	35	32	29	27	26	25	25	26	27	29	31	34	38
54	15 56	15 52	48	45	43	41	39	38	38	38	39	40	42	44	47	15 50
52	16 04	16 01	15 58	15 55	15 53	15 51	50	49	48	49	49	15 51	15 52	15 55	15 58	16 01
N 50	16 12	16 09	16 06	16 03	16 01	16 00	15 59	15 58	15 58	15 58	15 59	16 01	16 02	16 05	16 07	16 10
45	28	26	24	22	21	20	16 19	16 19	16 19	16 19	16 20	21	23	25	28	30
40	41	39	38	37	36	35	35	35	35	36	37	38	40	42	44	16 47
35	16 53	16 51	16 50	16 49	16 49	16 48	16 48	16 48	16 49	16 50	16 51	16 52	16 54	16 56	16 58	17 00
30	17 03	17 01	17 01	17 00	17 00	17 00	17 00	17 01	17 01	17 02	17 04	17 05	17 07	17 09	17 10	13
N 20	17 20	17 19	17 19	17 19	17 19	17 20	17 20	17 21	17 22	17 23	17 25	17 26	17 28	17 29	17 31	17 33
N 10	35	35	35	36	37	37	38	39	41	42	17 43	17 45	17 46	17 48	17 50	17 51
0	17 49	17 50	17 51	17 52	17 53	17 54	17 55	17 56	17 58	17 59	18 01	18 02	18 04	18 05	18 07	18 08
S 10	18 03	18 05	18 06	18 07	18 09	18 10	18 12	18 14	18 15	18 17	18	20	21	23	24	25
20	19	21	23	25	26	28	30	32	34	36	37	18 39	18 40	18 41	18 43	18 44
S 30	18 37	18 39	18 42	18 44	18 47	18 49	18 51	18 54	18 56	18 58	18 59	19 01	19 02	19 03	19 04	19 05
35	47	18 50	18 53	18 56	18 59	19 02	19 04	19 06	19 09	19 11	19 12	14	15	16	17	18
40	18 59	19 03	19 06	19 09	19 13	16	18	21	23	26	27	29	30	31	32	32
45	19 14	18	22	25	29	32	36	19 39	19 41	19 44	19 45	19 47	19 48	19 49	19 50	19 50
50	31	36	41	45	50	19 54	19 57	20 01	20 03	20 06	20 08	20 10	20 11	20 12	20 12	20 11
S 52	19 40	19 45	19 50	19 55	19 59	20 04	20 07	20 11	20 14	20 17	20 19	20 21	20 22	20 22	20 22	20 22
54	19 49	19 55	20 00	20 05	20 10	15	19	23	26	29	31	33	34	34	34	34
56	20 00	20 06	12	18	23	28	33	37	40	20 43	20 45	20 47	20 48	20 49	20 48	20 47
58	12	19	25	32	38	20 43	20 48	20 53	20 57	21 00	21 02	21 04	21 05	21 05	21 05	21 03
S 60	20 26	20 34	20 41	20 48	20 55	21 01	21 07	21 12	21 17	21 20	21 23	21 25	21 25	21 25	21 24	21 22

FIGURE A-1. G.m.t. OF SUNSET/SUNRISE FOR DECEMBER 1978

CONVERSION OF ARC TO TIME

°	h m	°	h m	°	h m	°	h m	°	h m	°	h m	′	m s
0	0 00	60	4 00	120	8 00	180	12 00	240	16 00	300	20 00	0	0 00
1	0 04	61	4 04	121	8 04	181	12 04	241	16 04	301	20 04	1	0 04
2	0 08	62	4 08	122	8 08	182	12 08	242	16 08	302	20 08	2	0 08
3	0 12	63	4 12	123	8 12	183	12 12	243	16 12	303	20 12	3	0 12
4	0 16	64	4 16	124	8 16	184	12 16	244	16 16	304	20 16	4	0 16
5	0 20	65	4 20	125	8 20	185	12 20	245	16 20	305	20 20	5	0 20
6	0 24	66	4 24	126	8 24	186	12 24	246	16 24	306	20 24	6	0 24
7	0 28	67	4 28	127	8 28	187	12 28	247	16 28	307	20 28	7	0 28
8	0 32	68	4 32	128	8 32	188	12 32	248	16 32	308	20 32	8	0 32
9	0 36	69	4 36	129	8 36	189	12 36	249	16 36	309	20 36	9	0 36
10	0 40	70	4 40	130	8 40	190	12 40	250	16 40	310	20 40	10	0 40
11	0 44	71	4 44	131	8 44	191	12 44	251	16 44	311	20 44	11	0 44
12	0 48	72	4 48	132	8 48	192	12 48	252	16 48	312	20 48	12	0 48
13	0 52	73	4 52	133	8 52	193	12 52	253	16 52	313	20 52	13	0 52
14	0 56	74	4 56	134	8 56	194	12 56	254	16 56	314	20 56	14	0 56
15	1 00	75	5 00	135	9 00	195	13 00	255	17 00	315	21 00	15	1 00
16	1 04	76	5 04	136	9 04	196	13 04	256	17 04	316	21 04	16	1 04
17	1 08	77	5 08	137	9 08	197	13 08	257	17 08	317	21 08	17	1 08
18	1 12	78	5 12	138	9 12	198	13 12	258	17 12	318	21 12	18	1 12
19	1 16	79	5 16	139	9 16	199	13 16	259	17 16	319	21 16	19	1 16
20	1 20	80	5 20	140	9 20	200	13 20	260	17 20	320	21 20	20	1 20
21	1 24	81	5 24	141	9 24	201	13 24	261	17 24	321	21 24	21	1 24
22	1 28	82	5 28	142	9 28	202	13 28	262	17 28	322	21 28	22	1 28
23	1 32	83	5 32	143	9 32	203	13 32	263	17 32	323	21 32	23	1 32
24	1 36	84	5 36	144	9 36	204	13 36	264	17 36	324	21 36	24	1 36
25	1 40	85	5 40	145	9 40	205	13 40	265	17 40	325	21 40	25	1 40
26	1 44	86	5 44	146	9 44	206	13 44	266	17 44	326	21 44	26	1 44
27	1 48	87	5 48	147	9 48	207	13 48	267	17 48	327	21 48	27	1 48
28	1 52	88	5 52	148	9 52	208	13 52	268	17 52	328	21 52	28	1 52
29	1 56	89	5 56	149	9 56	209	13 56	269	17 56	329	21 56	29	1 56
30	2 00	90	6 00	150	10 00	210	14 00	270	18 00	330	22 00	30	2 00
31	2 04	91	6 04	151	10 04	211	14 04	271	18 04	331	22 04	31	2 04
32	2 08	92	6 08	152	10 08	212	14 08	272	18 08	332	22 08	32	2 08
33	2 12	93	6 12	153	10 12	213	14 12	273	18 12	333	22 12	33	2 12
34	2 16	94	6 16	154	10 16	214	14 16	274	18 16	334	22 16	34	2 16
35	2 20	95	6 20	155	10 20	215	14 20	275	18 20	335	22 20	35	2 20
36	2 24	96	6 24	156	10 24	216	14 24	276	18 24	336	22 24	36	2 24
37	2 28	97	6 28	157	10 28	217	14 28	277	18 28	337	22 28	37	2 28
38	2 32	98	6 32	158	10 32	218	14 32	278	18 32	338	22 32	38	2 32
39	2 36	99	6 36	159	10 36	219	14 36	279	18 36	339	22 36	39	2 36
40	2 40	100	6 40	160	10 40	220	14 40	280	18 40	340	22 40	40	2 40
41	2 44	101	6 44	161	10 44	221	14 44	281	18 44	341	22 44	41	2 44
42	2 48	102	6 48	162	10 48	222	14 48	282	18 48	342	22 48	42	2 48
43	2 52	103	6 52	163	10 52	223	14 52	283	18 52	343	22 52	43	2 52
44	2 56	104	6 56	164	10 56	224	14 56	284	18 56	344	22 56	44	2 56
45	3 00	105	7 00	165	11 00	225	15 00	285	19 00	345	23 00	45	3 00
46	3 04	106	7 04	166	11 04	226	15 04	286	19 04	346	23 04	46	3 04
47	3 08	107	7 08	167	11 08	227	15 08	287	19 08	347	23 08	47	3 08
48	3 12	108	7 12	168	11 12	228	15 12	288	19 12	348	23 12	48	3 12
49	3 16	109	7 16	169	11 16	229	15 16	289	19 16	349	23 16	49	3 16
50	3 20	110	7 20	170	11 20	230	15 20	290	19 20	350	23 20	50	3 20
51	3 24	111	7 24	172	11 24	231	15 24	291	19 24	351	23 24	51	3 24
52	3 28	112	7 28	172	11 28	232	15 28	292	19 28	352	23 28	52	3 28
53	3 32	113	7 32	173	11 32	233	15 32	293	19 32	353	23 32	53	3 32
54	3 36	114	7 36	174	11 36	234	15 36	294	19 36	354	23 36	54	3 36
55	3 40	115	7 40	175	11 40	235	15 40	295	19 40	355	23 40	55	3 40
56	3 44	116	7 44	176	11 44	236	15 44	296	19 44	356	23 44	56	3 44
57	3 48	117	7 48	177	11 48	237	15 48	297	19 48	357	23 48	57	3 48
58	3 52	118	7 52	178	11 52	238	15 52	298	19 52	358	23 52	58	3 52
59	3 56	119	7 56	179	11 56	239	15 56	299	19 56	359	23 56	59	3 56

The above table is for converting expressions in arc to their equivalent in time; its main use in this Almanac is for the conversion of longitude for application to L.M.T. (*added* if *west*, *subtracted* if *east*) to give G.M.T., or vice versa, particularly in the case of sunrise, sunset, etc.

FIGURE A-2. CONVERSION OF ARC TO TIME

GMT	⊙ SUN GHA	Dec.	ARIES GHA ♈	VENUS −4.4 GHA	Dec.	JUPITER −2.0 GHA	Dec.	SATURN 1.0 GHA	Dec.	◑ MOON GHA	Dec.
h m	° ′	° ′	° ′	° ′	° ′	° ′	° ′	° ′	° ′	° ′	° ′
12 00	0 30.3	S23 26.2	269 42.1	44 58	S13 32	139 09	N18 48	103 49	N 7 59	103 12	N 5 13
10	3 00.2	26.2	272 12.5	47 29		141 39		106 19		105 38	12
20	5 30.2	26.2	274 43.0	49 59		144 10		108 49		108 03	10
30	8 00.1	26.2	277 13.4	52 29		146 40		111 20		110 29	09
40	10 30.1	26.2	279 43.8	54 59		149 11		113 50		112 54	07
50	13 00.0	26.2	282 14.2	57 29		151 41		116 21		115 20	06
13 00	15 30.0	S23 26.2	284 44.6	59 59	S13 32	154 11	N18 48	118 51	N 7 59	117 46	N 5 04
10	17 59.9	26.2	287 15.0	62 29		156 42		121 21		120 11	03
20	20 29.9	26.3	289 45.4	64 59		159 12		123 52		122 37	01
30	22 59.8	26.3	292 15.8	67 29		161 43		126 22		125 02	5 00
40	25 29.8	26.3	294 46.2	70 00		164 13		128 53		127 28	4 58
50	27 59.7	26.3	297 16.7	72 30		166 44		131 23		129 54	57
14 00	30 29.7	S23 26.3	299 47.1	75 00	S13 32	169 14	N18 48	133 53	N 7 59	132 19	N 4 55
10	32 59.6	26.3	302 17.5	77 30		171 44		136 24		134 45	54
20	35 29.6	26.3	304 47.9	80 00		174 15		138 54		137 11	52
30	37 59.5	26.3	307 18.3	82 30		176 45		141 25		139 36	50
40	40 29.5	26.3	309 48.7	85 00		179 16		143 55		142 02	49
50	42 59.4	26.3	312 19.1	87 30		181 46		146 25		144 27	47
15 00	45 29.4	S23 26.3	314 49.5	90 01	S13 33	184 17	N18 49	148 56	N 7 59	146 53	N 4 46
10	47 59.3	26.3	317 19.9	92 31		186 47		151 26		149 19	44
20	50 29.3	26.3	319 50.4	95 01		189 18		153 57		151 44	43
30	52 59.2	26.3	322 20.8	97 31		191 48		156 27		154 10	41
40	55 29.2	26.3	324 51.2	100 01		194 19		158 57		156 36	40
50	57 59.1	26.3	327 21.6	102 31		196 49		161 28		159 01	38
16 00	60 29.1	S23 26.3	329 52.0	105 01	S13 33	199 19	N18 49	163 58	N 7 59	161 27	N 4 37
10	62 59.0	26.3	332 22.4	107 31		201 50		166 29		163 52	35
20	65 29.0	26.3	334 52.8	110 01		204 20		168 59		166 18	34
30	67 58.9	26.3	337 23.2	112 32		206 51		171 30		168 44	32
40	70 28.9	26.3	339 53.6	115 02		209 21		174 00		171 09	30
50	72 58.8	26.3	342 24.0	117 32		211 52		176 30		173 35	29
17 00	75 28.7	S23 26.3	344 54.5	120 02	S13 33	214 22	N18 49	179 01	N 7 59	176 01	N 4 27
10	77 58.7	26.3	347 24.9	122 32		216 52		181 31		178 26	26
20	80 28.6	26.3	349 55.3	125 02		219 23		184 02		180 52	24
30	82 58.6	26.3	352 25.7	127 32		221 53		186 32		183 17	23
40	85 28.5	26.3	354 56.1	130 02		224 24		189 02		185 43	21
50	87 58.5	26.3	357 26.5	132 32		226 54		191 33		188 09	20
18 00	90 28.4	S23 26.3	359 56.9	135 03	S13 34	229 25	N18 49	194 03	N 7 59	190 34	N 4 18
10	92 58.4	26.3	2 27.3	137 33		231 55		196 34		193 00	16
20	95 28.3	26.3	4 57.7	140 03		234 26		199 04		195 25	15
30	97 58.3	26.3	7 28.2	142 33		236 56		201 34		197 51	13
40	100 28.2	26.3	9 58.6	145 03		239 27		204 05		200 17	12
50	102 58.2	26.3	12 29.0	147 33		241 57		206 35		202 42	10
19 00	105 28.1	S23 26.3	14 59.4	150 03	S13 34	244 27	N18 49	209 06	N 7 59	205 08	N 4 09
10	107 58.1	26.3	17 29.8	152 33		246 58		211 36		207 34	07
20	110 28.0	26.3	20 00.2	155 04		249 28		214 06		209 59	06
30	112 58.0	26.3	22 30.6	157 34		251 59		216 37		212 25	04
40	115 27.9	26.3	25 01.0	160 04		254 29		219 07		214 50	03
50	117 57.9	26.3	27 31.4	162 34		257 00		221 38		217 16	4 01
20 00	120 27.8	S23 26.3	30 01.9	165 04	S13 34	259 30	N18 49	224 08	N 7 59	219 42	N 3 59
10	122 57.8	26.3	32 32.3	167 34		262 01		226 39		222 07	58
20	125 27.7	26.3	35 02.7	170 04		264 31		229 09		224 33	56
30	127 57.7	26.3	37 33.1	172 34		267 01		231 39		226 58	55
40	130 27.6	26.3	40 03.5	175 04		269 32		234 10		229 24	53
50	132 57.6	26.3	42 33.9	177 35		272 02		236 40		231 50	52
21 00	135 27.5	S23 26.3	45 04.3	180 05	S13 35	274 33	N18 49	239 11	N 7 59	234 15	N 3 50
10	137 57.5	26.3	47 34.7	182 35		277 03		241 41		236 41	48
20	140 27.4	26.3	50 05.1	185 05		279 34		244 11		239 07	47
30	142 57.3	26.3	52 35.5	187 35		282 04		246 42		241 32	45
40	145 27.3	26.3	55 06.0	190 05		284 35		249 12		243 58	44
50	147 57.2	26.3	57 36.4	192 35		287 05		251 43		246 23	42
22 00	150 27.2	S23 26.3	60 06.8	195 05	S13 35	289 35	N18 49	254 13	N 7 59	248 49	N 3 41
10	152 57.1	26.3	62 37.2	197 36		292 06		256 43		251 15	39
20	155 27.1	26.3	65 07.6	200 06		294 36		259 14		253 40	38
30	157 57.0	26.3	67 38.0	202 36		297 07		261 44		256 06	36
40	160 27.0	26.3	70 08.4	205 06		299 37		264 15		258 31	34
50	162 56.9	26.3	72 38.8	207 36		302 08		266 45		260 57	33
23 00	165 26.9	S23 26.3	75 09.2	210 06	S13 35	304 38	N18 49	269 15	N 7 59	263 23	N 3 31
10	167 56.8	26.3	77 39.7	212 36		307 09		271 46		265 48	30
20	170 26.8	26.3	80 10.1	215 06		309 39		274 16		268 14	28
30	172 56.7	26.3	82 40.5	217 36		312 09		276 47		270 39	27
40	175 26.7	26.3	85 10.9	220 07		314 40		279 17		273 05	25
50	177 56.6	26.3	87 41.3	222 37		317 10		281 47		275 31	23
Rate	14 59.7	0 00.0		15 00.7	S0 00.3	15 02.7	N0 00.1	15 02.5	0 00.0	14 33.7	S0 09.3

Lat.	Moonset	Diff.
N		
°	h m	m
72	12 11	−03
70	12 04	00
68	11 59	+02
66	11 54	04
64	11 50	06
62	11 46	07
60	11 43	08
58	11 40	09
56	11 37	10
54	11 35	11
52	11 33	12
50	11 31	13
45	11 27	14
40	11 24	15
35	11 21	16
30	11 18	17
20	11 13	19
10	11 09	20
0	11 05	22
10	11 01	23
20	10 57	25
30	10 52	26
35	10 49	27
40	10 46	28
45	10 43	30
50	10 38	31
52	10 36	32
54	10 34	33
56	10 31	34
58	10 29	35
60	10 25	36
S		

Moon's P. in A.

Alt.	Corr.	Alt.	Corr.
°	+	°	+
	′		′
0	55	56	30
5	54	57	29
12	53	58	28
16	52	59	27
19	51	61	26
22	50	62	25
25	49	63	24
27	48	64	23
29	47	65	22
31	46	66	21
33	45	68	20
35	44	69	19
37	43	70	18
39	42	71	17
40	41	72	16
42	40	73	15
43	39	74	14
45	38	75	13
46	37	76	12
48	36	77	11
49	35	78	10
50	34	80	
52	33		
53	32		
54	31		
56	30		
57			

Sun SD 16′.3
Moon SD 15′
Age 21d

FIGURE A-3. GHA AND DECLINATION OF THE SUN FOR DECEMBER 21, 1978

N. Lat. {LHA greater than 180°..... Zn=Z; LHA less than 180°..... Zn=360−Z}

DECLINATION (15°-29°) SAME NAME AS LATITUDE

LAT 30°

LHA	15° Hc	d	Z	16° Hc	d	Z	17° Hc	d	Z	18° Hc	d	Z	19° Hc	d	Z	20° Hc	d	Z	21° Hc	d	Z	22° Hc	d	Z	23° Hc	d	Z	24° Hc	d	Z	25° Hc	d	Z	26° Hc	d	Z	27° Hc	d	Z	28° Hc	d	Z	29° Hc	d	Z	LHA
70	24 33	+27	86	25 00	+26	85	25 26	+26	84	25 52	+25	83	26 17	+25	82	26 42	+25	81	27 07	+24	80	27 31	+23	79	27 54	+24	78	28 18	+22	77	28 40	+22	76	29 02	+22	75	29 24	+21	74	29 45	+21	73	30 06	+20	72	290
71	23 41	27	86	24 08	26	85	24 34	26	84	25 00	26	83	25 26	25	82	25 51	25	81	26 16	24	80	26 40	24	79	27 04	23	78	27 27	23	77	27 50	22	76	28 12	22	75	28 34	22	74	28 56	21	73	29 17	20	72	289
72	22 50	26	85	23 16	27	84	23 43	26	83	24 09	25	82	24 34	26	81	25 00	24	80	25 24	25	79	25 49	24	78	26 13	25	77	26 36	24	76	27 00	23	75	27 22	22	74	27 44	22	73	28 06	21	72	28 27	21	71	288
73	21 58	27	85	22 25	26	84	22 51	26	83	23 17	26	82	23 43	23	81	24 08	25	80	24 33	25	79	24 58	24	78	25 22	24	77	25 46	23	76	26 09	23	75	26 32	23	74	26 55	22	73	27 17	21	72	27 38	21	71	287
74	21 06	27	84	21 33	27	83	22 00	26	83	22 26	26	82	22 52	25	81	23 17	25	80	23 42	25	79	24 07	25	78	24 32	24	77	24 56	23	76	25 19	23	75	25 42	23	74	26 05	22	73	26 27	22	71	26 49	22	70	286
75	20 14	+27	84	20 41	+27	83	21 08	+26	82	21 34	+26	81	22 00	+26	80	22 26	+25	79	22 51	+25	78	23 16	+25	77	23 41	+24	76	24 05	+24	75	24 29	+24	74	24 53	+23	73	25 16	+22	72	25 38	+22	71	26 00	+22	70	285
76	19 23	27	84	19 50	27	83	20 17	26	82	20 43	26	81	21 09	26	80	21 35	26	79	22 01	25	78	22 26	25	77	22 51	24	76	23 15	24	75	23 39	24	74	24 03	23	73	24 26	23	72	24 49	23	71	25 12	22	70	284
77	18 31	27	83	18 58	27	82	19 25	27	81	19 52	26	80	20 18	26	79	20 44	26	78	21 10	25	77	21 35	25	76	22 00	25	75	22 25	24	74	22 49	24	73	23 13	24	72	23 37	23	71	24 00	23	70	24 23	22	69	283
78	17 40	27	83	18 07	27	82	18 34	27	81	19 01	26	80	19 27	26	79	19 53	26	78	20 19	26	77	20 45	25	76	21 10	25	75	21 35	25	74	22 00	24	73	22 24	24	72	22 48	23	71	23 11	23	70	23 34	23	69	282
79	16 48	27	82	17 15	28	81	17 43	27	80	18 10	26	79	18 36	27	78	19 03	26	77	19 29	26	76	19 55	25	76	20 20	25	75	20 45	25	74	21 10	25	73	21 35	24	72	21 59	25	71	22 22	24	70	22 46	23	69	281
80	15 57	+27	82	16 24	+28	81	16 52	+27	80	17 19	+26	79	17 45	+27	78	18 12	+26	77	18 38	+26	76	19 04	+26	75	19 30	+25	74	19 55	+25	73	20 20	+25	72	20 45	+25	71	21 10	+24	70	21 34	+24	69	21 58	+23	68	280
81	15 05	28	81	15 33	27	80	16 00	28	79	16 28	27	78	16 55	26	77	17 21	27	77	17 48	26	76	18 14	26	75	18 40	26	74	19 06	25	73	19 31	25	72	19 56	25	71	20 21	24	70	20 45	24	69	21 09	24	68	279
82	14 14	28	81	14 42	27	80	15 09	28	79	15 37	27	78	16 04	27	77	16 31	27	76	16 58	26	75	17 24	26	74	17 50	26	73	18 16	26	72	18 42	25	71	19 07	25	70	19 32	25	69	19 57	24	69	20 21	24	68	278
83	13 23	28	80	13 51	27	79	14 18	28	78	14 46	27	78	15 13	28	77	15 41	26	76	16 07	27	75	16 34	27	74	17 01	26	73	17 27	26	72	17 53	25	71	18 18	26	70	18 44	25	69	19 09	24	68	19 33	25	67	277
84	12 31	29	80	13 00	28	79	13 28	27	78	13 55	28	77	14 23	27	76	14 50	27	75	15 17	27	74	15 44	27	73	16 11	26	72	16 37	27	72	17 04	25	71	17 29	26	70	17 55	25	69	18 20	26	68	18 46	24	67	276
85	11 40	+29	79	12 09	+28	78	12 37	+28	78	13 05	+28	77	13 33	+27	76	14 00	+27	75	14 27	+28	74	14 55	+27	73	15 22	+26	72	15 48	+27	71	16 15	+26	70	16 41	+26	69	17 07	+25	68	17 32	+26	67	17 58	+25	66	275
86	10 49	29	79	11 18	28	78	11 46	28	77	12 14	28	76	12 42	28	75	13 10	28	74	13 38	27	73	14 05	27	73	14 32	27	72	14 59	27	71	15 26	26	70	15 52	27	69	16 19	26	68	16 45	25	67	17 10	26	66	274
87	09 58	29	78	10 27	29	78	10 56	28	77	11 24	28	76	11 52	28	75	12 20	28	74	12 48	27	73	13 15	28	72	13 43	27	71	14 10	27	70	14 37	27	69	15 04	27	68	15 31	26	67	15 57	26	67	16 23	26	66	273
88	09 08	28	78	09 36	29	77	10 05	29	76	10 34	29	75	11 02	28	74	11 30	28	73	11 58	28	73	12 26	28	72	12 54	27	71	13 21	28	70	13 49	27	69	14 16	27	68	14 43	26	67	15 09	27	66	15 36	26	65	272
89	08 17	29	77	08 46	29	77	09 15	29	76	09 43	29	75	10 12	28	74	10 40	29	73	11 09	28	72	11 37	28	71	12 05	28	70	12 33	27	69	13 00	28	68	13 28	27	68	13 55	27	67	14 22	27	66	14 49	26	65	271
90	07 26	+29	77	07 55	+29	76	08 24	+29	75	08 53	+29	74	09 22	+29	73	09 51	+28	73	10 19	+29	72	10 48	+28	71	11 16	+28	70	11 44	+28	69	12 12	+28	68	12 40	+27	67	13 07	+28	66	13 35	+27	65	14 02	+27	64	270
91	06 36	29	77	07 05	29	76	07 34	29	75	08 03	29	74	08 32	29	73	09 01	29	72	09 30	29	71	09 59	28	71	10 27	29	69	10 56	28	69	11 24	28	68	11 52	28	67	12 20	27	66	12 47	28	65	13 15	27	64	269
92	05 45	30	76	06 15	29	75	06 44	30	74	07 14	29	73	07 43	29	73	08 12	29	72	08 41	29	71	09 10	29	70	09 39	28	69	10 07	29	68	10 36	28	67	11 04	28	66	11 32	29	65	12 01	27	64	12 28	28	64	268
93	04 55	30	76	05 25	29	75	05 54	30	74	06 24	29	73	06 53	30	72	07 23	29	71	07 52	29	70	08 21	29	69	08 50	29	69	09 19	29	68	09 48	29	67	10 17	28	66	10 45	29	65	11 14	28	64	11 42	28	63	267
94	04 04	30	75	04 34	30	74	05 04	30	73	05 34	30	72	06 04	30	72	06 34	29	71	07 03	30	70	07 33	29	69	08 02	29	68	08 31	29	67	09 00	29	66	09 29	29	65	09 58	29	65	10 27	29	64	10 56	28	63	266
95	03 14	+31	75	03 45	+30	74	04 15	+30	73	04 45	+30	72	05 15	+30	71	05 45	+30	70	06 15	+29	69	06 44	+30	68	07 14	+30	68	07 44	+29	67	08 13	+29	66	08 42	+30	65	09 12	+29	64	09 41	+29	63	10 10	+28	62	265
96	02 24	31	74	02 55	30	73	03 25	30	72	03 55	31	71	04 26	30	70	04 56	30	70	05 26	30	69	05 56	30	68	06 26	30	67	06 56	30	66	07 26	29	65	07 55	30	65	08 25	29	64	08 54	30	63	09 24	29	62	264
97	01 34	31	74	02 05	31	73	02 36	30	72	03 06	31	71	03 37	30	70	04 07	31	69	04 38	30	68	05 08	30	68	05 38	30	67	06 08	31	66	06 39	30	65	07 09	29	64	07 38	30	63	08 08	30	62	08 38	30	61	263
98	00 45	31	73	01 16	30	72	01 46	31	71	02 17	31	70	02 48	31	70	03 19	30	69	03 49	31	68	04 20	31	67	04 51	30	66	05 21	31	65	05 52	30	64	06 22	30	64	06 52	30	63	07 22	30	62	07 52	30	61	262
99	−00 05	31	73	00 26	31	72	00 57	31	71	01 28	31	70	01 59	31	69	02 30	31	68	03 01	31	67	03 32	31	67	04 03	31	66	04 34	31	65	05 05	30	64	05 35	31	63	06 06	31	62	06 37	30	61	07 07	30	61	261
100	−0 54	+31	72	−0 23	+31	71	0 08	+31	70	0 39	+32	69	01 11	+31	69	01 42	+31	68	02 13	+32	67	02 45	+31	66	03 16	+31	65	03 47	+31	64	04 18	+31	64	04 49	+31	63	05 20	+31	62	05 51	+31	61	06 22	+31	60	260
101	−1 44	32	72	−1 12	31	71	−0 41	32	70	−0 09	31	69	0 22	32	68	0 54	32	67	01 26	31	66	01 57	32	66	02 29	31	65	03 00	32	64	03 32	31	63	04 03	31	62	04 34	32	61	05 06	31	60	05 37	31	60	259
102	−2 33	32	71	−2 01	32	70	−1 29	31	69	−0 58	32	68	−0 26	32	68	0 06	32	67	00 38	32	66	01 10	32	65	01 42	32	64	02 14	31	63	02 45	32	63	03 17	32	62	03 49	32	61	04 21	31	60	04 52	32	59	258
103	−3 22	32	71	−2 50	32	70	−2 18	32	69	−1 46	32	68	−1 14	33	67	−0 41	32	66	−0 09	32	65	00 23	32	65	00 55	32	64	01 27	32	63	01 59	33	62	02 32	32	61	03 04	32	60	03 36	32	60	04 08	32	59	257
104	−4 11	32	70	−3 39	33	69	−3 06	32	68	−2 34	33	67	−2 01	32	67	−1 29	33	66	−0 56	32	65	−0 24	33	64	00 09	32	63	00 41	33	62	01 14	32	62	01 46	33	61	02 19	32	60	02 51	33	59	03 24	32	58	256
105	−5 00	+33	69	−4 27	+32	69	−3 55	+33	68	−3 22	+33	67	−2 49	+33	66	−2 16	+33	65	−1 43	+32	64	−1 11	+33	64	−0 38	+33	63	−0 05	+33	62	00 28	+33	61	01 01	+33	60	01 34	+33	59	02 07	+32	59	02 39	+33	58	255
106	−5 48	33	69	−5 15	32	68	−4 43	33	67	−4 10	33	66	−3 36	33	66	−3 03	33	65	−2 30	33	64	−1 57	33	63	−1 24	33	62	−0 51	34	61	−0 17	33	61	00 16	33	60	00 49	33	59	01 22	34	58	01 56	33	57	254
107	−6 37	33	69	−6 04	34	68	−5 30	33	67	−4 57	33	66	−4 24	34	65	−3 50	33	64	−3 17	34	63	−2 43	33	63	−2 10	34	62	−1 36	34	61	−1 02	33	60	−0 29	34	59	00 05	33	58	00 38	34	58	01 12	34	57	253
108							−6 18	34	66	−5 44	33	65	−5 11	34	65	−4 37	34	64	−4 03	34	63	−3 29	34	62	−2 55	34	61	−2 21	34	60	−1 47	34	60	−1 13	34	59	−0 39	34	58	−0 05	34	57	00 29	34	56	252
109										−6 32	34	65	−5 58	35	64	−5 23	34	63	−4 49	34	62	−4 15	34	62	−3 41	35	61	−3 06	34	60	−2 32	34	59	−1 58	35	58	−1 23	34	57	−0 49	35	57	−0 14	34	56	251
110																−6 10	+35	63	−5 35	+34	62	−5 01	+35	61	−4 26	+35	60	−3 51	+34	59	−3 17	+35	59	−2 42	+35	58	−2 07	+35	57	−1 32	+35	56	−0 57	+35	55	250
111																			−6 21	35	61	−5 46	35	60	−5 11	35	60	−4 36	35	59	−4 01	35	58	−3 26	36	57	−2 50	35	56	−2 15	35	56	−1 40	36	55	249
112																									−5 56	36	59	−5 20	35	58	−4 45	36	57	−4 09	36	57	−3 33	35	56	−2 58	36	55	−2 22	36	54	248
113																												−6 04	36	58	−5 28	36	57	−4 52	36	56	−4 16	36	55	−3 40	36	55	−3 04	36	54	247
114																															−6 12	37	56	−5 35	36	56	−4 59	37	55	−4 22	36	54	−3 46	37	53	246
115																																		−6 18	+37	55	−5 41	+37	54	−5 04	+37	53	−4 27	+37	53	245
116																																					−6 23	37	54	−5 46	37	53	−5 09	38	52	244
117																																											−5 49	37	52	243

LHA	15° Hc	d	Z	16° Hc	d	Z	17° Hc	d	Z	18° Hc	d	Z	19° Hc	d	Z	20° Hc	d	Z	21° Hc	d	Z	22° Hc	d	Z	23° Hc	d	Z	24° Hc	d	Z	25° Hc	d	Z	26° Hc	d	Z	27° Hc	d	Z	28° Hc	d	Z	29° Hc	d	Z	LHA
89	−6 36	29	104	271																																										
88	−5 45	30	104	−6 15	29	105	272																																							
87	−4 55	29	104	−5 24	30	105	−5 54	30	106	−6 24	29	107	273																																	
86	−4 04	30	105	−4 34	30	106	−5 04	30	107	−5 34	30	108	−6 04	30	108	−6 34	29	109	274																											
85	−3 14	−31	105	−3 45	−30	106	−4 15	−30	107	−4 45	−30	108	−5 15	−30	109	−5 45	−30	110	−6 15	−29	111	275																								
84	−2 24	31	106	−2 55	30	107	−3 25	30	108	−3 55	31	109	−4 26	30	109	−4 56	30	110	−5 26	30	111	−5 56	30	112	−6 26	30	113	276																		
83	−1 34	31	106	−2 05	31	107	−2 36	30	108	−3 06	31	109	−3 37	30	110	−4 07	31	111	−4 38	30	112	−5 08	30	112	−5 38	30	113	−6 08	31	114	277																
82	−0 45	31	107	−1 16	30	108	−1 46	31	109	−2 17	31	110	−2 48	31	110	−3 19	30	111	−3 49	31	112	−4 20	31	113	−4 51	30	114	−5 21	31	115	−5 52	30	116	−6 22	30	116	278										
81	00 05	31	107	−0 26	31	108	−0 57	31	109	−1 28	31	110	−1 59	31	111	−2 30	31	112	−3 01	31	113	−3 32	31	113	−4 03	31	114	−4 34	31	115	−5 05	30	116	−5 35	31	117	−6 06	31	118	279							
80	00 54	−31	108	00 23	−31	109	−0 08	−31	110	−0 39	−32	111	−1 11	−31	111	−1 42	−31	112	−2 13	−32	113	−2 45	−31	114	−3 16	−31	115	−3 47	−31	116	−4 18	−31	116	−4 49	−31	117	−5 20	−31	118	−5 51	−31	119	−6 22	−31	120	280
79	01 44	32	108	01 12	31	109	00 41	32	110	00 09	31	111	−0 22	32	112	−0 54	32	113	−1 26	31	114	−1 57	32	114	−2 29	31	115	−3 00	32	116	−3 32	31	117	−4 03	31	118	−4 34	32	119	−5 06	31	120	−5 37	31	120	281
78	02 33	32	109	02 01	32	110	01 29	31	111	00 58	32	112	00 26	32	112	−0 06	32	113	−0 38	32	114	−1 10	32	115	−1 42	32	116	−2 14	31	117	−2 45	32	117	−3 17	32	118	−3 49	32	119	−4 21	31	120	−4 52	32	121	282
77	03 22	32	109	02 50	32	110	02 18	32	111	01 46	32	112	01 14	33	113	00 41	32	114	00 09	32	115	−0 23	32	115	−0 55	32	116	−1 27	32	117	−1 59	30	118	−2 32	32	119	−3 04	32	120	−3 36	32	120	−4 08	32	121	283
76	04 11	32	110	03 39	33	111	03 06	32	112	02 34	33	113	02 01	32	113	01 29	33	114	00 56	32	115	00 24	33	116	−0 09	32	117	−0 41	33	118	−1 14	32	118	−1 46	33	119	−2 19	32	120	−2 51	33	121	−3 24	32	122	284
75	05 00	−33	111	04 27	−32	111	03 55	−33	112	03 22	−33	113	02 49	−33	114	02 16	−33	115	01 43	−32	116	01 11	−33	116	00 38	−33	117	00 05	−33	118	−0 28	−33	119	−1 01	−33	120	−1 34	−33	121	−2 07	−32	121	−2 39	−33	122	285
74	05 48	32	111	05 16	33	112	04 43	33	113	04 10	34	114	03 36	33	114	03 03	33	115	02 30	33	116	01 57	33	117	01 24	33	118	00 51	34	119	00 17	33	119	−0 16	33	120	−0 49	33	121	−1 22	33	122	−1 56	33	123	286
73	06 37	33	112	06 04	34	112	05 30	33	113	04 57	33	114	04 24	34	115	03 50	33	116	03 17	34	117	02 43	33	117	02 10	34	118	01 36	34	119	01 02	33	120	00 29	34	121	−0 05	33	122	−0 38	33	122	−1 12	34	123	287
72	07 25	33	112	06 52	34	113	06 18	34	114	05 44	33	115	05 11	34	116	04 37	34	116	04 03	34	117	03 29	34	118	02 55	34	119	02 21	34	120	01 47	34	120	01 13	34	121	00 39	34	122	00 05	34	123	−0 29	34	124	288
71	08 13	34	113	07 39	33	114	07 06	34	114	06 32	34	115	05 58	35	116	05 23	34	117	04 49	34	118	04 15	34	118	03 41	34	119	03 06	34	120	02 32	34	121	01 58	35	122	01 23	34	123	00 49	35	123	00 14	34	124	289
70	09 01	−34	113	08 27	−34	114	07 53	−35	115	07 18	−34	116	06 44	−34	117	06 10	−35	117	05 35	−34	118	05 01	−35	119	04 26	−35	120	03 51	−34	121	03 17	−35	121	02 42	−35	122	02 07	−35	123	01 32	−35	124	00 57	−35	125	290

S. Lat. {LHA greater than 180°..... Zn=180−Z; LHA less than 180°..... Zn=180+Z}

DECLINATION (15°-29°) CONTRARY NAME TO LATITUDE

FIGURE A-4. AZIMUTH (z) OF THE SUN FOR 30° LATITUDE

FAA WJH Technical Center
00092513

ILLUSTRATIVE EXAMPLE.

Determine the true azimuth of the sun at Gulfport, Miss. (30° 24'N/89° 04'W) for sunset on December 21, 1978.

FROM THE AIR ALMANAC FOR JULY-DECEMBER 1978

1. Using figure A-1, the G.m.t. of sunset at Greenwich for 30° 24'N on December 22nd interpolates out to 17:04. From figure A-2, 89° 04' west longitude converted to time is 5:56. Adding this to 17:04 gives 23:00 for the G.m.t. of sunset at Gulfport, Miss.

2. From figure A-3, the GHA and declination of the sun for 23:00 G.m.t. are 165° 27' and S (south) 23° 26', respectively. Subtracting 89° 04' west longitude from the GHA gives an LHA of 76° 23' which rounds to 76°.

FROM VOL. II, SIGHT REDUCTION TABLES

3. Figure A-4 shows the table for the nearest latitude (30° N), range of declination (15°- 29°), and name of declination (south). Using an LHA of 76° and a declination rounded of 23°, the listed azimuth (Z) is 117°. Following the convention noted in the upper left-hand corner of figure A-4, the true azimuth (Z_n) is 243° (360°-117°).

REFERENCES

1. The Air Almanac, U.S. Naval Observatory, Wash., D.C. (Available from: U.S. Government Printing Office, Wash., D.C. 20402.)

2. Sight Reduction Tables for Air Navigation, H. O. Pub. No. 249, Vols. II & III, U.S. Navy Hydrographic Office, Wash., D.C. (Available from: U.S. Government Printing Office, Wash., D.C. 20402.)

DISTRIBUTION

AAF-1
AAF-440
AAF-550 (10 copies)
AAL-1
AAL-500
AAL-510
AAT-100
AAT-120
ACE-1
ACE-500
ACE-510
AEA-1
AEA-500
AEA-510
AED-1
AEM-1
AEM-11
AEU-1
AFSFO-824
AGL-1
AGL-500
AGL-510
ANA-1
ANA-2 (2 copies)
ANA-4 (2 copies)
ANA-5
ANA-64 (3 copies)
ANA-64B
ANA-100
ANA-200
ANA-300
ANA-400
ANA-500
ANA-600
ANA-700
ANE-1
ANE-500
ANE-510
ANW-1
ANW-500
ANW-510
APC-1
APC-500
APC-510
ARD-1
ARD-50
ARD-53
ARD-54
ARD-100
ARD-110
ARM-1
ARM-500
ARM-510
ASO-1
ASO-500
ASO-510
ASW-1
ASW-500
ASW-510
ATF-1
AWE-1
AWE-500
AWE-510
AWE-521