Report No. FAA-NA-79-47

ANALYTICAL INVESTIGATION OF TIME CORRECTION IN ASYNCHRONOUS ALPHA-BETA TRACKING FILTERS WITH APPLICATION TO EN ROUTE ALTITUDE TRACKING

ROBERT E. LEFFERTS

MAY 1980

NAFEC REPORT

Document is available to the U.S. public through
the National Technical Information Service,
Springfield, Virginia 22161.

U. S. DEPARTMENT OF TRANSPORTATION
FEDERAL AVIATION ADMINISTRATION
National Aviation Facilities Experimental Center
Atlantic City, New Jersey 08405

NOTICE

The United States Government does not endorse products or manufacturers. Trade or manufacturer's names appear herein solely because they are considered essential to the object of this report.

Technical Report Documentation Page

1. Report No.	2. Government Accession No.	3. Recipient's Catalog No.
FAA-NA-79-47	AD-A085 606	

4. Title and Subtitle
ANALYTICAL INVESTIGATION OF TIME CORRECTION IN ASYNCHRONOUS ALPHA-BETA TRACKING FILTERS WITH APPLICATION TO EN ROUTE ALTITUDE TRACKING

5. Report Date
May 1980

6. Performing Organization Code
ANA-220

7. Author(s)
Robert E. Lefferts

8. Performing Organization Report No.
FAA-NA-79-47

9. Performing Organization Name and Address
Federal Aviation Administration
National Aviation Facilities Experimental Center
Atlantic City, New Jersey 08405

10. Work Unit No. (TRAIS)

11. Contract or Grant No.
975-200-10A

12. Sponsoring Agency Name and Address
Federal Aviation Administration
National Aviation Facilities Experimental Center
Atlantic City, New Jersey 08405

13. Type of Report and Period Covered
NAFEC

14. Sponsoring Agency Code
ANA-1

15. Supplementary Notes

16. Abstract

In the analysis of the α-β tracking filter, it is normally assumed that the tracking filter and data source operate in synchronism at a constant data rate. An analytical solution is obtained for the case in which the tracking filter and data source operate asynchronously, thus violating the standard assumptions. In order to compensate for the asynchronous operation of the filter, the technique of time correction is used to adjust the measured data point via the estimated velocity in order to approximate the synchronous operation of the filter and the data source. A specific example is given in which the influence of time correction on the performance of the altitude tracker is evaluated in terms of the filter performance for extended time-interval position prediction as is used in Conflict Alert. It is shown that errors in the predicted positions, on the order of a few thousand feet, can be introduced if the time-correction process is not incorporated into the altitude tracking algorithm. In addition, it is shown that the magnitude of the errors increases significantly as the altitude change rate increases, while for an altitude tracker with time correction the position prediction performance is essentially constant for all altitude change rates of practical significance. The computational resources required for the implementation of the time-correction process are inconsequential as compared to the total requirements of the tracking functions.

17. Key Words
Tracking
α-βFilters
Radar Tracking
Track-while-scan radar

18. Distribution Statement
Document is available to the U.S. public through the National Technical Information Service, Springfield, Virginia 22161

19. Security Classif. (of this report)	20. Security Classif. (of this page)	21. No. of Pages	22. Price
Unclassified	Unclassified	27	

Form DOT F 1700.7 (8-72) Reproduction of completed page authorized

METRIC CONVERSION FACTORS

Approximate Conversions to Metric Measures

Symbol	When You Know	Multiply by	To Find	Symbol
		LENGTH		
in	inches	*2.5	centimeters	cm
ft	feet	30	centimeters	cm
yd	yards	0.9	meters	m
mi	miles	1.6	kilometers	km
		AREA		
in^2	square inches	6.5	square centimeters	cm^2
ft^2	square feet	0.09	square meters	m^2
yd^2	square yards	0.8	square meters	m^2
mi^2	square miles	2.6	square kilometers	km^2
	acres	0.4	hectares	ha
		MASS (weight)		
oz	ounces	28	grams	g
lb	pounds	0.45	kilograms	kg
	short tons (2000 lb)	0.9	tonnes	t
		VOLUME		
tsp	teaspoons	5	milliliters	ml
Tbsp	tablespoons	15	milliliters	ml
fl oz	fluid ounces	30	milliliters	ml
c	cups	0.24	liters	l
pt	pints	0.47	liters	l
qt	quarts	0.95	liters	l
gal	gallons	3.8	liters	l
ft^3	cubic feet	0.03	cubic meters	m^3
yd^3	cubic yards	0.76	cubic meters	m^3
		TEMPERATURE (exact)		
°F	Fahrenheit temperature	5/9 (after subtracting 32)	Celsius temperature	°C

*1 in = 2.54 (exactly). For other exact conversions and more detailed tables, see NBS Misc. Publ. 286, Units of Weights and Measures, Price $2.25, SD Catalog No. C13.10:286.

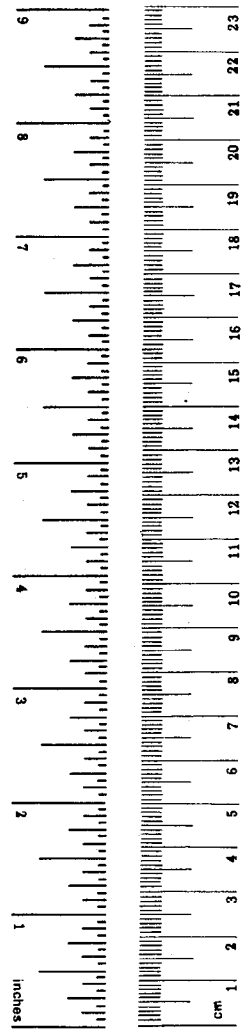

Approximate Conversions from Metric Measures

Symbol	When You Know	Multiply by	To Find	Symbol
		LENGTH		
mm	millimeters	0.04	inches	in
cm	centimeters	0.4	inches	in
m	meters	3.3	feet	ft
m	meters	1.1	yards	yd
km	kilometers	0.6	miles	mi
		AREA		
cm^2	square centimeters	0.16	square inches	in^2
m^2	square meters	1.2	square yards	yd^2
km^2	square kilometers	0.4	square miles	mi^2
ha	hectares (10,000 m^2)	2.5	acres	
		MASS (weight)		
g	grams	0.035	ounces	oz
kg	kilograms	2.2	pounds	lb
t	tonnes (1000 kg)	1.1	short tons	
		VOLUME		
ml	milliliters	0.03	fluid ounces	fl oz
l	liters	2.1	pints	pt
l	liters	1.06	quarts	qt
l	liters	0.26	gallons	gal
m^3	cubic meters	35	cubic feet	ft^3
m^3	cubic meters	1.3	cubic yards	yd^3
		TEMPERATURE (exact)		
°C	Celsius temperature	9/5 (then add 32)	Fahrenheit temperature	°F

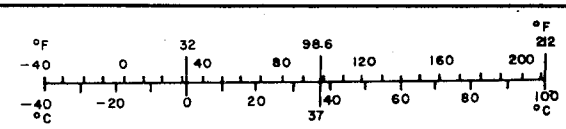

TABLE OF CONTENTS

	Page
EXECUTIVE SUMMARY	v
1. INTRODUCTION	1
2. MATHEMATICAL ANALYSIS	2
2.1 Definition of the $\alpha - \beta$ Tracking Filter	2
2.2 Variance Reduction Ratios for $\alpha - \beta$ Tracking Filters Using Time Correction	4
2.3 Application of the Asynchronous Variance Reduction Ratios to Altitude Tracking	7
3. NUMERICAL RESULTS	9
3.1 Velocity Variance Ratio	9
3.2 Errors in the Predicted Altitude	10
3.3 Estimated Time to Reach a Given Altitude	16
4. SUMMARY, CONCLUSIONS, AND RECOMMENDATIONS	17
5. REFERENCES	21

LIST OF ILLUSTRATIONS

Figure		Page
1	Time Sequence of Events for Synchronous Tracking Filter Operation	3
2	Time Sequence of Events for Asynchronous Tracking Filter Operation	3
3	Illustration of Input Data Errors for Asynchronous Filter Without Time Correction	7
4	Illustration of Input Data Errors for Asynchronous Filter With Time Correction	8
5	Ratio of Velocity Error Variances for Comparing Tracking Filter Without Time Correction to Tracking Filter With Time Correction	11
6	Illustration on Relationship Between Calculated Error and Region of Uncertainty	13
7	Error in the Predicted Altitude for Smoothing Parameters of $\alpha = 0.59$ and $\beta = 0.25$	14
8	Error in the Predicted Altitude for Smoothing Parameters of $\alpha = 0.75$ and $\beta = 0.45$	15
9	Timing Errors at the 1-Percent Level	18

EXECUTIVE SUMMARY

The basis for all advanced air traffic control functions is the ability to predict the future position of an aircraft. An important part of the prediction process is the calculation of the future altitude of an aircraft, which is performed by the altitude tracking function. It is the objective of the present study to evaluate the performance of the altitude tracking function and, in particular, to evaluate the influence of an assumption which has been made in the design of the altitude tracker; namely, that all altitude data can be assumed to have been received at the center of the tracking cycle. In reality, however, the altitude data may have been received up to 3 seconds before or after the time at which it was assumed to have been received. Although this assumption apparently results in some minor saving of computational resources, it introduces an additional source of error in the computations of the altitude tracker. It is shown in this study that the use of the above assumption may result in an additional error of up to a few thousand feet in the predicted position, as computed 120 seconds into the future, and these errors are found in certain cases of practical significance. In particular, it was found that the magnitude of the errors in the predicted position increases as the altitude change rate increases, and that for change rates of practical significance, the error in the predicted position may exceed the vertical separation standards.

Elimination of the errors in the predicted position induced by the above assumption was found to be possible using a technique known as time correction, in which the estimated velocity is used to adjust (or correct) the measured position for the difference between the actual time of measurement and the assumed time of measurement as used by the altitude tracker. Using the time-correction process, it was found possible to significantly reduce the errors in the predicted altitude. Also, the performance of the altitude tracker would now be essentially invariant for all altitude change rates of practical significance. Not only would the prediction errors be significantly less than the vertical separation standards, but the elimination of the variation in performance with the change rate would mean that special consideration, via additional programing logic, would no longer have to be used in the case of high-transition-rate aircraft. Since the computational resources required to implement the time-correction process are minimal, it is recommended that this procedure be used in the altitude tracking function. Not only is the magnitude of the errors sufficient to warrant this change, but the resulting increase in the accuracy of the predicted position may very well, in fact, result in a net decrease in the computational requirements if fewer track pairs need to be subjected to the more detailed computations required to determine if a conflict exists. It is highly probable that the computational resources required for the time-correction process are significantly less than the other, less satisfying approaches which might be taken. Also, the possibility of a reduction in the computational resources for the above reason is an added advantage.

1. INTRODUCTION

The $\alpha-\beta$ tracking filter is a widely used technique for performing the operation of numerical differentiation to obtain velocity estimates from noisy position measurements. The simplicity of the algorithm and the limited computational requirements have resulted in the use of this filter in many practical situations and, as a consequence, extensive analytical studies have been made of the $\alpha-\beta$ filter (e.g., references 1 to 16). In virtually all of the studies which have been performed to date, it has been assumed that the data are obtained at a constant rate. In general, however, this is an unrealistic assumption because even for a surveillance radar rotating at a constant rate, the fact that the targets are moving means that the time interval between position measurements will not be constant. The reason for this is simply the fact that a moving target will not necessarily be at the same angular location with respect to the antenna so that while the average data rate will stay constant, the actual time between samples will vary. As a result, most practical situations do not meet the assumption of a constant time interval between data points on which most $\alpha-\beta$ filter analyses are based. One particular study in which this assumption was not made is in the work by Cantrell (references 13 and 14), and it is the objective in the present study to show how the results obtained by Cantrell can be applied to the analysis of the altitude tracking function required for Conflict Alert (references 17 and 18).

For the purposes of en route air traffic control there is an additional reason, beyond that arising as a result of moving targets, why the data samples will not be synchronized with the operation of the tracking algorithm. Since a particular air traffic control center may have from 10 to 15 different sensors providing surveillance information, it is obvious that the tracking algorithm could not operate synchronously with all at the same time. As a result, the tracking algorithm is scheduled to operate at fixed time intervals and is to process the surveillance data which have been received since the previous operation of the tracking algorithm (reference 17). The specific purpose of this study is to demonstrate the consequences of assuming that the position measurements, in this particular case the altitude data, and the tracking filter operate in a synchronous manner when, in fact, this is not true. If the situation above is recognized, then it is possible to compensate for the asynchronous operation of the tracking filter and data source by using the estimated velocity to adjust the measured data to compensate for the difference in time between the filter operation and the actual measurement time. In using such a procedure, known as time correction, the degree of success is dependent on the ability of the tracking algorithm to provide accurate velocity estimates and the degree to which the true target trajectory can be expressed as a first-order function of the time difference. An explicit quantitative analysis is given which will allow a comparative study to be made between a tracking algorithm in which the time-correction process is used and one in which it is not used. The performance statistics of interest in this study will be the variance of the velocity estimates and the accuracy of the extended time-interval position prediction, both of which are of considerable importance in determining the ability of the tracking algorithm to support functions such as Conflict Alert.

2. MATHEMATICAL ANALYSIS

2.1 DEFINITION OF THE $\alpha - \beta$ TRACKING FILTER.

The $\alpha - \beta$ tracking algorithm is a recursive procedure which performs the operations of position smoothing, position prediction, and numerical differentiation for velocity estimation and is specified by the equations,

$$\begin{aligned} Z_s(k) &= Z_p(k) + \alpha(Z_m(k) - Z_p(k)) \\ Z_v(k) &= Z_v(k) + (\beta/T)(Z_m(k) - Z_p(k)) \\ Z_p(k+1) &= Z_s(k) + TZ_v(k) \end{aligned} \tag{1}$$

where $Z_s(k)$ = smoothed position at the kth time epoch

$Z_v(k)$ = velocity estimate

$Z_p(k)$ = predicted position

$Z_m(k)$ = measurement position

T = sampling period (assumed constant)

α, β = smoothing constants.

For the purposes of the tracking algorithm per se, it is only necessary to predict the future position of the target one time interval into the future; however, for the purposes of advanced air traffic control functions, it is necessary to make position predictions much further into the future so that an extended time-interval position prediction will be defined as

$$Z_p(k,T') = Z_s(k) + T' \, Z_v(k) \tag{2}$$

in which the time interval T' is arbitrary. The accuracy of the extended time-interval position prediction is dependent on the accuracy of the tracking filter outputs, Z_s and Z_v, and also on the degree to which the actual flight-path follows the constant velocity, straight-line assumption inherent in (2).

The algorithm as defined by (1) assumes the sequence of events as illustrated in figure 1 with all computations and measurements being coincident with the epoch times. In an asynchronous multisensor environment, however, data may be received at any time between the operations of the tracking algorithm. In such cases, it is necessary to assume a reference time for the smoothing and prediction process which may not necessarily be the time of operation of the tracking algorithm or the time of receipt of the measurement datum. In the case of the en route portion of the National Airspace System, the tracking

function operates at a fixed rate, not necessarily that of the sensor, with the computational time taken as the midpoint of the tracking cycle operation (reference 17). The operation of the tracking algorithm is illustrated in figure 2. The smoothing and prediction process is assumed to use the center of the tracking cycle as the reference time, thus predicting from the center of the present cycle to the center of the succeeding cycle. As illustrated in figure 2, measurement data may not be received at the reference time used by the tracking algorithm, and if this is the case, then the estimated velocity from the previous cycle may be used to move the data point, either forward or backward in time, to make it appear as though the measurement datum was received in synchronism at the center of the cycle. This process is known as time correction.

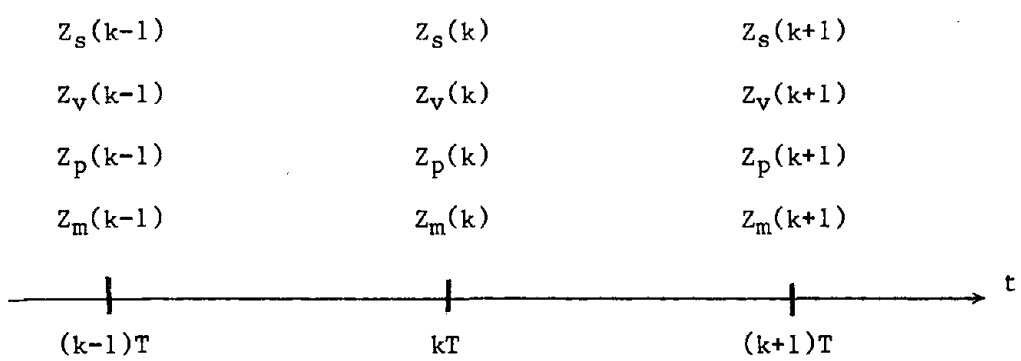

FIGURE 1. TIME SEQUENCE OF EVENTS FOR SYNCHRONOUS TRACKING FILTER OPERATION

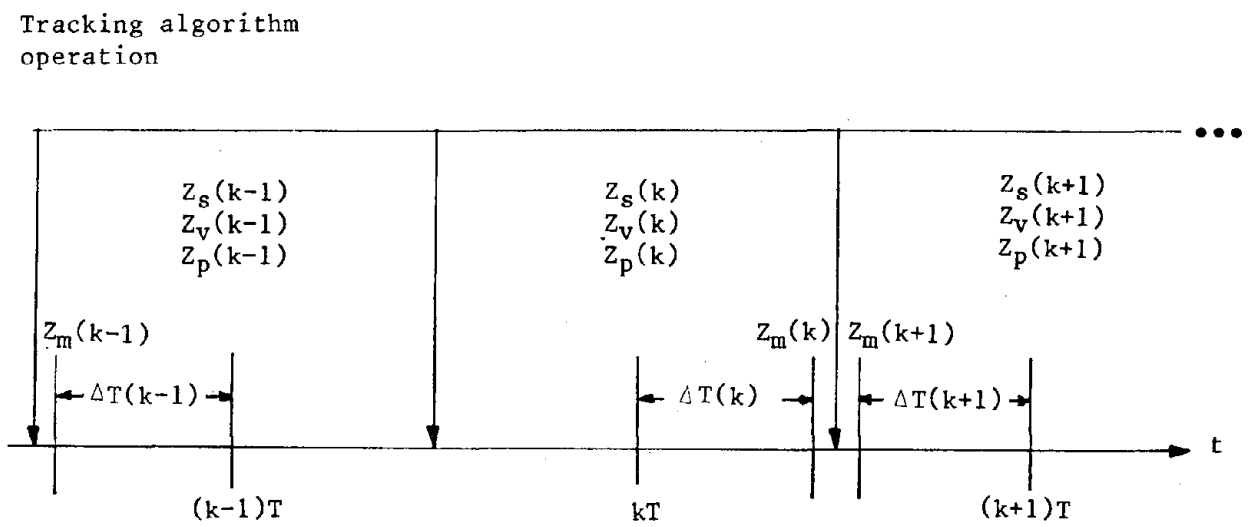

FIGURE 2. TIME SEQUENCE OF EVENTS FOR ASYNCHRONOUS TRACKING FILTER OPERATION

In this case the smoothing equations are

$$Z_s(k) = Z_p(k) + \alpha(Z_m(k) + \Delta T(k)\, Z_v(k-1) - Z_p(k))$$
$$Z_v(k) = Z_v(k-1) + (\beta/T)\,(Z_m(k) + \Delta T(k)\, Z_v(k-1) - Z_p(k)), \tag{3}$$

where

$$\Delta T(k) = kT - T_m(k), \tag{4}$$

with $T_m(k)$ being the actual time at which the position measurement was made.

As a result of the time-correction process it is not even necessary for data to be received every cycle, since if no datum is received in a particular cycle, the track (or assumed trajectory) is simply predicted ahead to the center of the next tracking cycle. (The opposite case in which multiple measurements are received within one cycle will not be considered, since it does not correspond to reality and additional consideration would have to be given to the exact usage being made of the multiple measurements.)

Via the process of time correction just described, it has been shown how it is possible for the tracking algorithm to operate at a fixed cyclic rate and yet the measurement data which are used by that algorithm may be obtained in a totally asynchronous manner, even to the extent of being obtained at a different data rate. The multiple sensor environment of the en route air traffic control system meets the conditions just described. It should be noted that if measurements are obtained asynchronously and the time-correction process is not used, then this is equivalent to the introduction of an error equal to the difference between the measured position and the true position at the time the measurement should have been made if the requirement for synchronism between the data source and the tracking algorithm had been fulfilled. The elimination or omission of the time-correction process will introduce an additional source of error into the tracking algorithm which is unnecessary if the time of receipt of the measured position is known.

2.2 VARIANCE REDUCTION RATIOS FOR $\alpha - \beta$ TRACKING FILTERS USING TIME CORRECTION

The performance of the $\alpha-\beta$ tracking filter is usually expressed in terms of the variance reduction ratios which are the ratios of the error variances at the output of the filter to the variance of the errors at the input of the filter. The variance reduction ratios describe the performance of the tracking filter in a steady-state situation in which all transients have decayed. If transient errors are present, such as at the start of a maneuver, then errors significantly larger than those discussed in this paper will be present. It can be shown, however, that the transient error for constant velocity targets will eventually decay to zero for the tracking filter regardless of whether or not time correction is used. Computation of the variance reduction ratios will be facilitated if the tracking algorithm equations are expressed in the matrix form:

$$\begin{bmatrix} Z_s(k) \\ Z_v(k) \end{bmatrix} = \begin{bmatrix} 1-\alpha & T(1+\alpha\Delta T/T-\alpha) \\ -\beta/T & (1+\beta\Delta T/T-\beta) \end{bmatrix} \begin{bmatrix} Z_s(k-1) \\ Z_v(k-1) \end{bmatrix} + \begin{bmatrix} \alpha \\ \beta/T \end{bmatrix} Z_m(k) \tag{5}$$

or,

$$Z(k) = A(T, \Delta T)\, Z(k-1) + B(T)\, (u(k) + w(k)) \tag{6}$$

where,

$$Z(k) = \begin{bmatrix} Z_s(k) \\ Z_v(k) \end{bmatrix}$$

$$A(T, \Delta T) = \begin{bmatrix} 1-\alpha & T(1+\alpha\Delta T/T-\alpha) \\ -\beta/T & (1+\beta\Delta T/T-\beta) \end{bmatrix}$$

$$B(T) = \begin{bmatrix} \alpha \\ \beta/T \end{bmatrix} ,$$

and the measurement datum, $Z_m(k)$, is expressed as the sum of a true deterministic component, $u(k)$, and a random error component, $w(k)$, with variance σ_w^2 which will be assumed to be white stationary noise representing the measurement error.

The noise response of the filter is obtained in terms of the covariance matrix for the errors at the filter output, and this response is given by (reference 19)

$$P(k+1) = A(T,\Delta T)P(k)A'(T,\Delta T) + B(T)\,\sigma_w^2\, B'(T), \tag{7}$$

where σ_w^2 is the variance of the input noise. All of the coefficients in (7) are constant with the exception of ΔT which is the random time-correction factor. Cantrell has shown that in the case where matrices A and B are random variables which are identically distributed and independent from sample to sample, that the covariance matrix is given by (reference 13)

$$P(k+1) = \overline{A(T, \Delta T)P(k)A'(T, \Delta T)} + \overline{B(T)\sigma_w^2 B'(T)} \tag{8}$$

where the bar denotes the expected value (averaged over the random variable of interest, in this case ΔT).

To solve for the variance reduction ratios, $A(T, \Delta T)$ and $B(T)$ are used in (8) with the resulting equations then being averaged over ΔT. By performing the required operations and noting that in the steady-state case

$$P(k+1) = P(k), \tag{9}$$

then (8) becomes, after some rearranging, and assuming that $E(\Delta T) = 0$,

$$\begin{bmatrix} \alpha(2-\alpha) & -2T(1-\alpha)^2 & -T^2(1-2\alpha+\alpha^2(1+\sigma_{\Delta T}^2/T^2)) \\ \beta(1-\alpha)/T & 2\beta-2\alpha\beta+\alpha & -T(1-\alpha-\beta+\alpha\beta(1+\sigma_{\Delta T}^2/T^2)) \\ -(\beta/T)^2 & 2\beta(1-\beta)/T & 2\beta-\beta^2(1+\sigma_{\Delta T}^2/T^2) \end{bmatrix} \begin{bmatrix} P_{ss} \\ P_{vs} \\ P_{vv} \end{bmatrix}$$

$$= \begin{bmatrix} \alpha^2 \\ \alpha\beta/T \\ (\beta/T)^2 \end{bmatrix} \sigma_w^2 , \tag{10}$$

where $\sigma_{\Delta T}^2 = E(\Delta T^2)$

P_{ss} = steady-state variance of the smoothed position, $Z_s(k)$

P_{vs} = steady-state covariance of $Z_v(k)$ and $Z_s(k)$

and P_{vv} = steady-state variance of $Z_v(k)$.

Solving these equations simultaneously gives

$$\begin{aligned} K_s &= P_{ss}/\sigma_w^2 = (2\alpha^2-3\alpha\beta+2\beta)/\Delta \\ K_{vs} &= P_{vs}/\sigma_w^2 = \beta(2\alpha-\beta)/(T\Delta) \\ K_v &= P_{vv}/\sigma_w^2 = 2(\beta/T)^2/\Delta \end{aligned} \tag{11}$$

with $\Delta = \alpha(4-2\alpha-\beta) - 2\sigma_{\Delta T}^2(\beta/T)^2$

where K_s, K_{vs}, and K_v are the normalized variance reduction ratios with respect to the input noise. In the case where $\sigma_{\Delta T}^2 = 0$, these equations reduce to the results found elsewhere (references 3, 12-16, 20). Since the factor $\sigma_{\Delta T}^2$ tends to reduce the value of the denominator in the variance reduction ratios, it would appear that the time-correction factor would actually result in an increase in the noise at the output of a tracking filter in which time correction is used, but as will be shown in the following section, this is not the case.

In the case of the predicted position, $Z_p(k,T')$ given by (2), the variance reduction ratio can be expressed in terms of the variance and covariance reduction ratios as

$$K_p(T') = K_s + 2T'K_{vs} + (T')^2K_v \tag{12}$$

or equivalently,

$$K_p(T') = (2\alpha^2-3\alpha\beta+2\beta + 2(T'/T)\beta(2\alpha-\beta) + 2(\beta T'/T)^2)/\Delta \tag{13}$$

where it is explicitly denoted that the variance reduction ratio for the predicted position is a function of the time interval over which the prediction is made. In the case of a single-cycle prediction (13), reduces to

$$K_p = (2\alpha^2 + \alpha\beta + 2\beta)/\Delta \tag{14}$$

which is the result usually found in the literature (when $\sigma^2_{\Delta T} = 0$).

2.3 APPLICATION OF THE ASYNCHRONOUS VARIANCE REDUCTION RATIOS TO ALTITUDE TRACKING.

The equations derived above can be applied to the analysis of an $\alpha - \beta$ tracking filter as used for the en route altitude tracking function (reference 17). For this purpose, the time-correction process is not used in order to minimize the computational requirements, and it is implicitly assumed that the error introduced by neglecting time correction is justifiable in terms of simplification of the algorithm. If the time-correction procedure is not performed in an asynchronous situation, then this is equivalent to the introduction of an error equal to the difference between the measured position and the true position at the time at which the filter assumes the measurement to have been made. If the target is moving at a constant true velocity Z_V, then the error which is introduced is equal to ΔTZ_V so that the errors at the input to the filter can be considered as two additive errors as illustrated in figure 3. The error ΔZ will be assumed to arise as a consequence of the quantization of

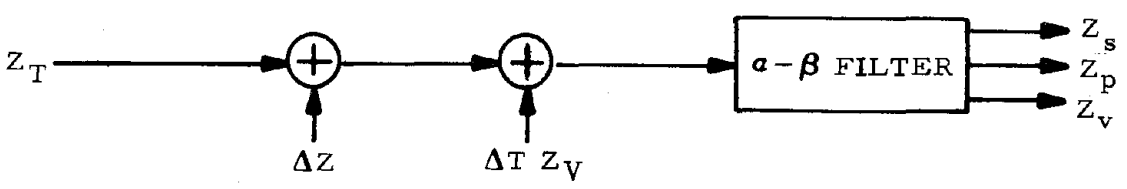

79-47-3

FIGURE 3. ILLUSTRATION OF INPUT DATA ERRORS FOR ASYNCHRONOUS FILTER WITHOUT TIME CORRECTION

the true position, Z_T. It will also be assumed that these errors are white and stochastically independent. The case in which time correction is used is illustrated conceptually in figure 4. As seen in this figure, the time-correction process is a feedback loop in which the estimated velocity is multiplied by ΔT to form a corrected input. A second noise source is also needed in this case to account for the fact that time is also quantized so that instead of the error being $\Delta T Z_V$, it is now $\Delta T_q Z_V$ where ΔTq is the time-quantization unit.

The performance of the tracking filter, in the case where the only errors are those discussed above, can be written in terms of the appropriate variances and variance reduction ratios. For example, in the case of the variance of the velocity errors, the filter performance without time correction is

$$P_{vv} = K_v'(\sigma^2_{\Delta Z} + Z_V^2 \ \sigma^2_{\Delta T}), \tag{15}$$

where

$$K_v' = 2(\beta/T)^2/\alpha(4-2\alpha-\beta)$$

$\sigma^2_{\Delta Z}$ = variance of measurement quantization errors,

$\sigma^2_{\Delta T}$ = variance of ΔT,

and in the case in which time correction is used

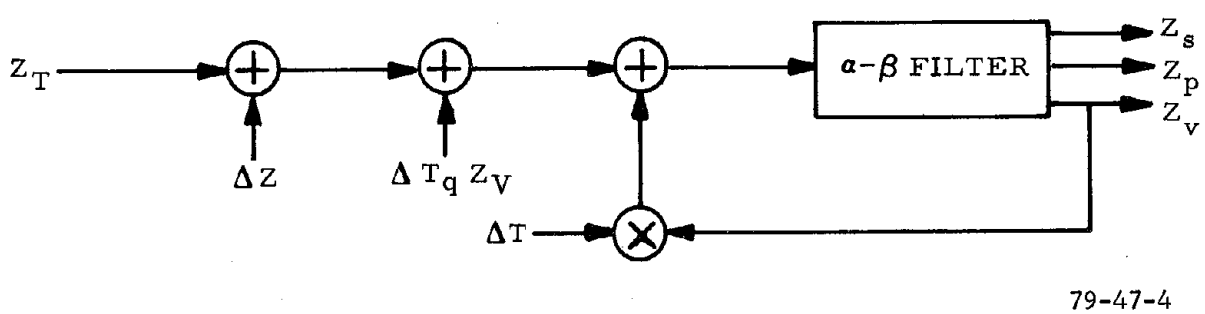

FIGURE 4. ILLUSTRATION OF INPUT DATA ERRORS FOR ASYNCHRONOUS FILTER WITH TIME CORRECTION

$$P_{vv} = K_v(\sigma^2_{\Delta Z} + Z_V^2 \sigma^2_{\Delta T_q}), \tag{16}$$

where K_v is given by (11) and

$\sigma^2_{\Delta T_q}$ = variance of time-quantization errors.

Similar results can be specified for the variances of the smoothed and predicted positions and for the covariance between the smoothed position and the velocity. If it is assumed that all the measurement errors and the time-correction factor, ΔT, are uniformly distributed with a mean of zero, then the error variances are

$$\sigma^2_{\Delta Z} = \Delta Z^2/12$$

$$\sigma^2_{\Delta T} = \Delta T^2/12 \tag{17}$$

and

$$\sigma^2_{\Delta T_q} = \Delta T_q^2/12,$$

where now ΔZ, ΔT, and ΔT_q are the widths of the intervals in which these quantities are contained. To evaluate the impact of time correction on the performance of the tracking algorithm, specific numerical results must be obtained, and these results are discussed in the following section.

3. NUMERICAL RESULTS

The theory developed in the previous section will now be applied to the specific case of the altitude tracking function of the en route program (reference 17). Since this tracking function is presently implemented without time correction, it would be useful to determine if the level of improvement which could be obtained by the addition of time correction would justify the computational resources required to perform the function.

3.1 VELOCITY VARIANCE RATIO.

To illustrate the performance differences between a tracking filter with time correction and one without, the variances of the velocity errors will be calculated in each case. Altitude measurements are presently reported with a quantization interval of 100 feet, and it will be assumed that the quantization error is the only source of error in the actual position measurements. The en route tracking function operates on a cyclical basis, with a period of 6 seconds as the basic cycle time so that ΔT = 6s. (For the purposes of this paper, the distinction between cycles and subcycles is immaterial.) In the case of the Air Traffic Control Radar Beacon System (reference 21) most en route sensors operate with a basic scan period of 10 seconds, and time is measured with a quantization interval of 1/2 second. Using the results from

the previous section, the ratio of the velocity error variance in the case where time correction is not used to the variance in the case when it is used is given by

$$r = \frac{\Delta Z^2+\Delta T^2 Z_V^2}{\Delta Z^2+\Delta T_q^2 Z_V^2} \quad \frac{1}{1 - (\beta \Delta T/T)^2/(6\alpha(4-2\alpha-\beta))} \tag{18}$$

and for the parameter values presently used (α=0.594, β=0.25), the variance ratio, r, is plotted in figure 5 as a function of the altitude change rate, Z_V. The parameter values describing the present system are such that the ratio of the variance reduction ratios, which is given by the second factor in (18), is only 1.0025, thus indicating that the errors introduced by the use of time correction are insignificant. However, as is easily seen from figure 5, the errors in the case where time correction is not used increase significantly as the altitude change rate increases. Thus, the increase in the velocity errors at the output of the tracking filter due to the use of the time-correction feedback loop are of no consequence when compared to the effect of the reduction of the errors in the input data due to the use of time correction. Examination of the results for other smoothing parameters of practical significance showed a very similar trend. It should be noted that nominal altitude change rates on the order of 2,000 ft/min are used by large commercial transports (reference 22) while the maximum change rates for turbojets are on the order of 7,000 to 10,000 ft/min (reference 28) so that potentially significant results are likely to be obtained for situations of practical interest. Needless to say, this is obviously the case for military traffic which may use significantly greater change rates.

3.2 ERRORS IN THE PREDICTED ALTITUDE.

Advanced air traffic control functions require the prediction of the future position of an aircraft sufficiently far into the future to allow for intervention in situations in which this is warranted. Since the smoothed velocity forms the basis for the position prediction, it is obvious that the velocity errors should be directly related to a more operationally identifiable measure of significance, and the errors in the predicted position, as given by (13), were chosen for this purpose. For operational use, position predictions are made for time periods of 120 seconds and 150 seconds with the longer predictions being used as a filtering algorithm to select track pairs for a more complete analysis in which the 120-second position predictions are used (references 17 and 18). Since the prediction performance of the tracking filter is highly dependent on the smoothing parameters, results were obtained for both time intervals and smoothing parameters currently used (reference 17) and for an alternative set which has been proposed (reference 23).

In order to convert from the variance of the predicted position to a specific level of error, some probabilistic criterion must be used at which the error is to be specified. The probability chosen for this purpose was the 1-percent

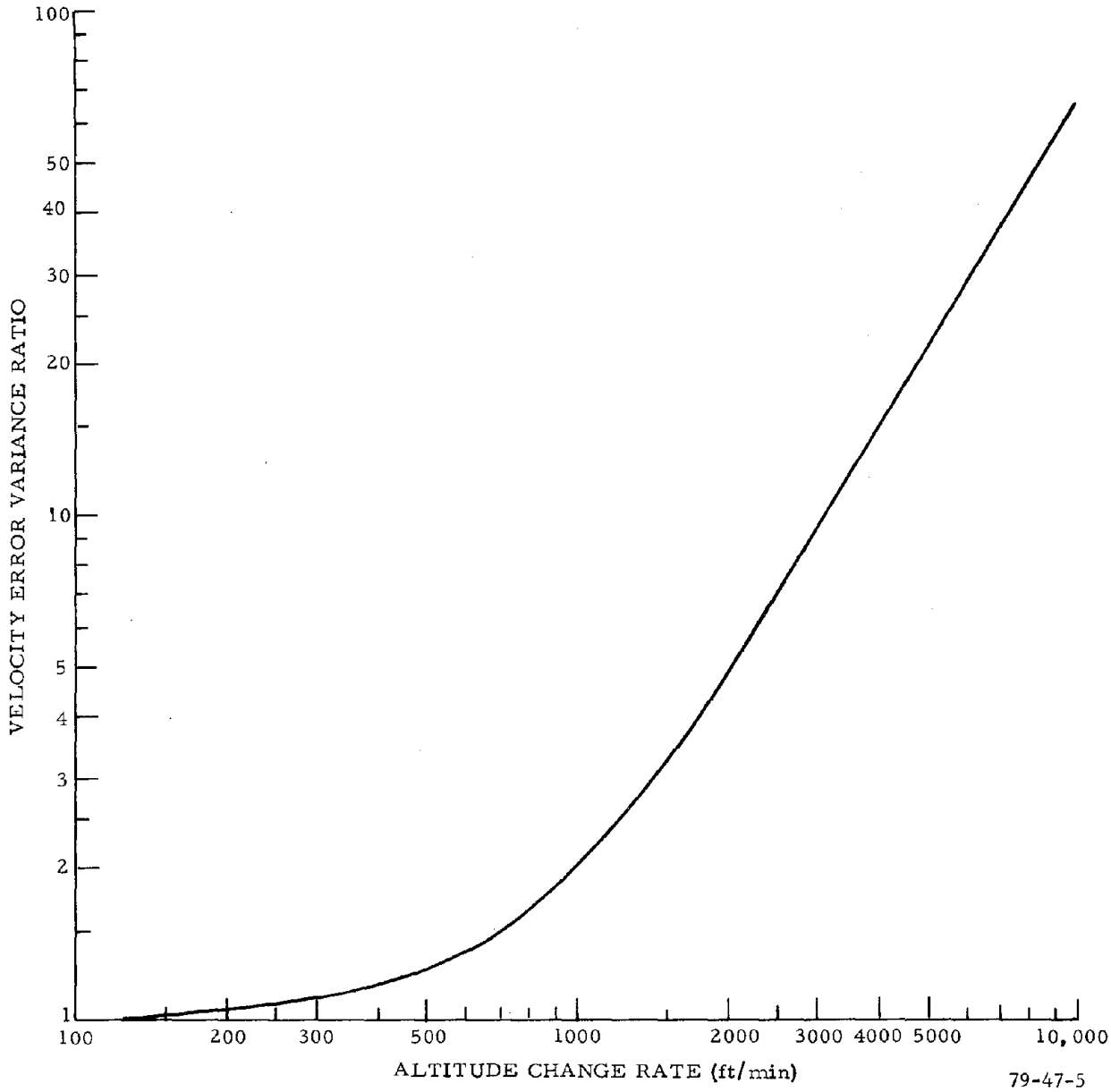

FIGURE 5. RATIO OF VELOCITY ERROR VARIANCES FOR COMPARING TRACKING FILTER WITHOUT TIME CORRECTION TO TRACKING FILTER WITH TIME CORRECTION

level (with 0.5 percent in each tail). This particular level was chosen as being sufficiently far out on the tails of the distribution to represent a relatively large error but not so far out as to represent an unreasonable error. Since several hundred aircraft may be tracked at the same time, a portion of which may be involved in a vertical transition, the choice of a 1-percent probability level is not at all unreasonable because under these conditions it is highly likely that the error in some of the predicted positions will equal or exceed those calculated at the 1-percent level. Calculation of the error level from the variance requires the assumption of a specific probability distribution for the errors at the output of the tracking filter. It will be assumed that the output errors are Gaussian distributed which is a reasonable assumption for practical purposes and is considered to be justified because of the additive contribution of the input errors and the recursive additive equations defining the operation of the filter. It must also be noted that the errors which will be calculated can be either positive or negative with respect to the predicted position, so that if a region of uncertainty is to be determined, then the size of this region is actually twice the error as calculated. The relationship between the calculated error and the region of uncertainty is illustrated in figure 6.

Using the assumptions above, the error in the predicted altitude of the 1-percent level as a function of the prediction interval, T', is given by

$$Z_e(T') = 2.576 \sqrt{K_p(T')(\sigma^2_{\Delta Z} + Z_V^2 \, \sigma^2_{\Delta T_q})} \tag{19}$$

in the case where time correction is used and

$$Z_e(T) = 2.576 \sqrt{K'_p(T') \, (\sigma^2_{\Delta Z} + Z_V^2 \, \sigma^2_{\Delta T})} \tag{20}$$

$$\text{where } K'_p(T') = (2\alpha^2 - 3\alpha\beta + 2\beta + 2(T'/T)\beta(2\alpha-\beta) + 2(\beta T'/T)^2)/\alpha(4-2\alpha-\beta) \tag{21}$$

in the case where time correction is not used. The errors in the predicted altitude are plotted in figures 7 and 8 as a function of the altitude change rate for both prediction times and for the parameter values of interest. As expected, the same trend as noted in figure 5 is present in these results, namely, that the altitude prediction errors increase significantly at the higher change rates in the case in which time correction is not applied to the tracking filter. As the results show, it is quite possible for the predicted altitude to be in error by a few thousand feet for altitude change rates used by commercial aircraft.

When the number of assumptions required to obtain these results is considered, it is very likely that even larger errors will be observed on occasion, and this is especially true of high-performance aircraft (e.g., military). When

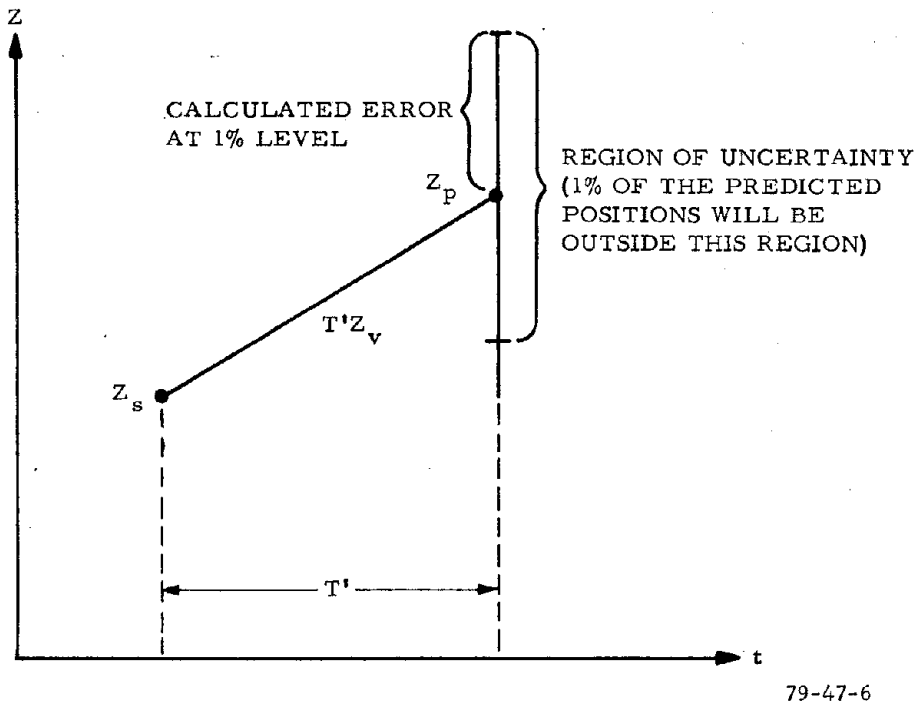

FIGURE 6. ILLUSTRATION ON RELATIONSHIP BETWEEN CALCULATED ERROR AND REGION OF UNCERTAINTY

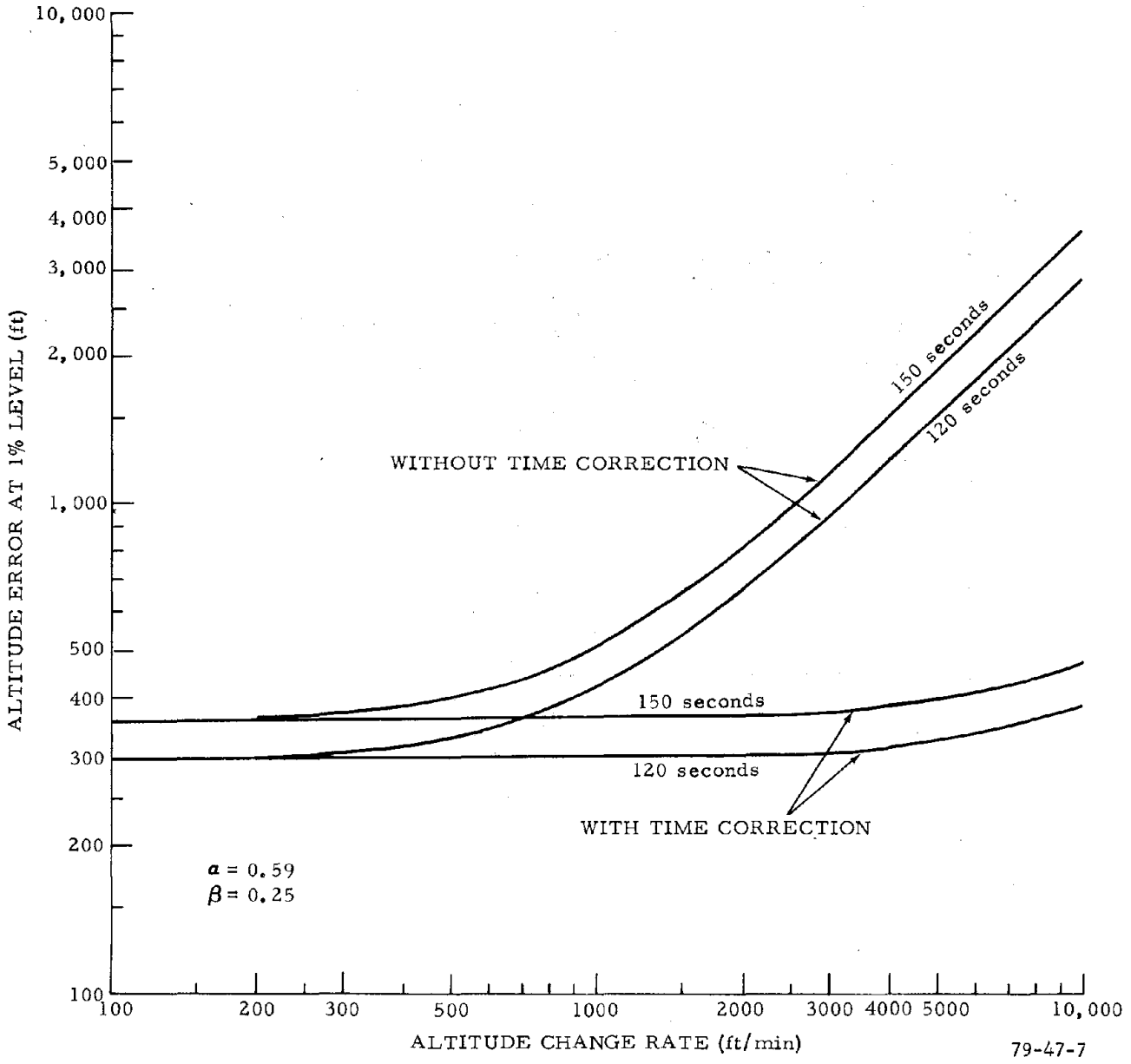

FIGURE 7. ERROR IN THE PREDICTED ALTITUDE FOR SMOOTHING PARAMETERS OF α=0.59 AND β=0.25

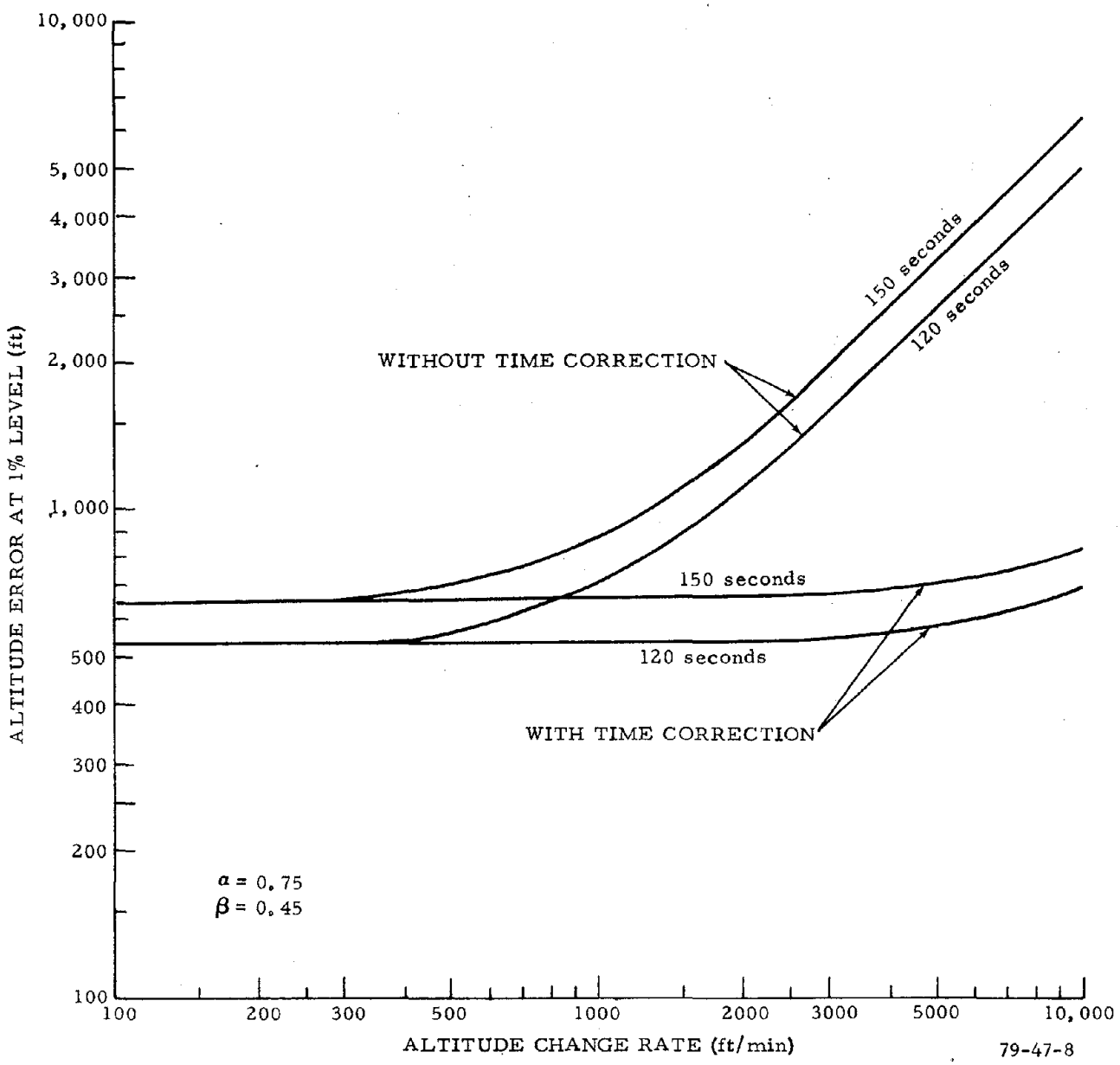

FIGURE 8. ERROR IN THE PREDICTED ALTITUDE FOR SMOOTHING PARAMETERS OF α=0.75 AND β=0.45

it is also considered that the altitude errors in figures 7 and 8 can be either positive or negative so that the results must be doubled to define a region which will exclude only 1 percent of the predicted positions, the significance of the time-correction process becomes readily apparent.

3.3 ESTIMATED TIME TO REACH A GIVEN ALTITUDE.

Another computation which is sometimes required is the time to reach a given altitude. Since both the smoothed position and estimated velocity are used in this computation, it is of interest to know how the time-correction process will affect the accuracy of the computation. If Z_a is a specified altitude, then the estimated time to reach this altitude is

$$t = (Z_a - Z_s)/Z_v \tag{22}$$

where Z_s is the current smoothed position and Z_v is the current estimated velocity. Using a first-order series expansion, the error in t, denoted as δt, is given by

$$\delta t = - \Delta Z_s/Z_V - \Delta Z_v(Z_a - Z_s)/Z_V^2 \tag{23}$$

where ΔZ_s and ΔZ_v are the errors in the smoothed position and velocity, respectively. Since it is assumed that all transients have decayed, the output of the tracking filter is unbiased so that $E(\Delta Z_s) = E(\Delta Z_v) = 0$. Recognizing that the errors in the smoothed position and the velocity are correlated, the variance of the time errors is given by

$$\sigma_{\delta t}^2 = \sigma_w^2 Z_V^{-2}(K_s + 2K_{vs}(Z_a - Z_s)/Z_V + K_v(Z_a - Z_s)^2/Z_V^2) \tag{24}$$

where the variance reduction ratios, K_s, K_{vs}, and K_v, as well as the input noise variance, σ_w^2, are chosen to fit the case under consideration. In the case in which time correction is not used, (24) becomes

$$\sigma_{\delta t}^2 = (\sigma_{\Delta Z}^2 + Z_V^2 \sigma_{\Delta T}^2)Z_V^{-2}\{2\alpha^2-3\alpha\beta+2\beta \tag{25}$$
$$+ 2\beta(2\alpha-\beta)(Z_a-Z_s)/TZ_V + 2((Z_a-Z_s)\beta/TZ_V)^2\}/\ \alpha(4-2\alpha-\beta)$$

and similarly for the case in which time correction is used.

The numerical results obtained using (24) are given in figure 9 for an altitude difference of 4,000 ft. It would be expected from the nature of the equations that the timing errors would be inversely proportional to the altitude change rate, and this is the case for low change rates; however, as the altitude change rate increases, a point will eventually be reached at which the accuracy of the time computation remains constant. The reason for this can be seen in (25) and corresponds to the point at which the first two factors of Z_V cancel and the significance of the remaining factors has been eliminated. At the lower change rates, the difference between the performance with and without time correction is insignificant, but as the change rate increases, the timing errors with time correction become totally insignificant, while those in the case without time correction remain at a level of marginal significance. In the latter case, the errors are sufficiently large in some situations to cause an incorrect determination of the proper tracking cycle in which the desired altitude would be reached. For larger altitude differences, the timing errors observed without time correction may correspond to two or more tracking cycles.

4. SUMMARY, CONCLUSIONS, AND RECOMMENDATIONS

An analysis was performed to evaluate the influence of the assumption that the altitude data are always received at the center of the tracking cycle when, in fact, they are received throughout the tracking cycle. Although this assumption does reduce the computational requirements of the altitude tracking function, the need to emphasize improved performance may outweigh the rather modest savings in computational resources achieved with this assumption. The technique used for the analysis of the influence of the above assumption was based on a similar situation analyzed by Cantrell (reference 13) in which the influence of a random update time on the performance of an $\alpha-\beta$ filter was examined. In the particular case of interest in the present study, the effect of the assumption that all altitude data are received at the center of a tracking cycle was analyzed by the introduction of an additional source of error in the form of time-jitter at the input of the tracking filter.

After it was found that the impact on performance could be significant, especially for large altitude change rates, a technique was examined for the elimination of these errors. In this technique, which is known as time correction, the estimated velocity of the target is used to adjust (or compensate) the measured position for the difference between the actual time of receipt of the datum and the assumed time of receipt used by the tracking filter. Although it is necessary to assume certain characteristics of the target trajectory to use the technique, it has been found to work rather well for the elimination of timing errors.

The numerical results obtained in this study, using parameter values applicable to the en route altitude tracker, indicate that significant errors in the predicted altitude are introduced when the time-correction process is not used. In situations of practical interest, the errors in the predicted position can be on the order of a few thousand feet and occur at vertical velocities of practical significance with the largest errors occurring at the

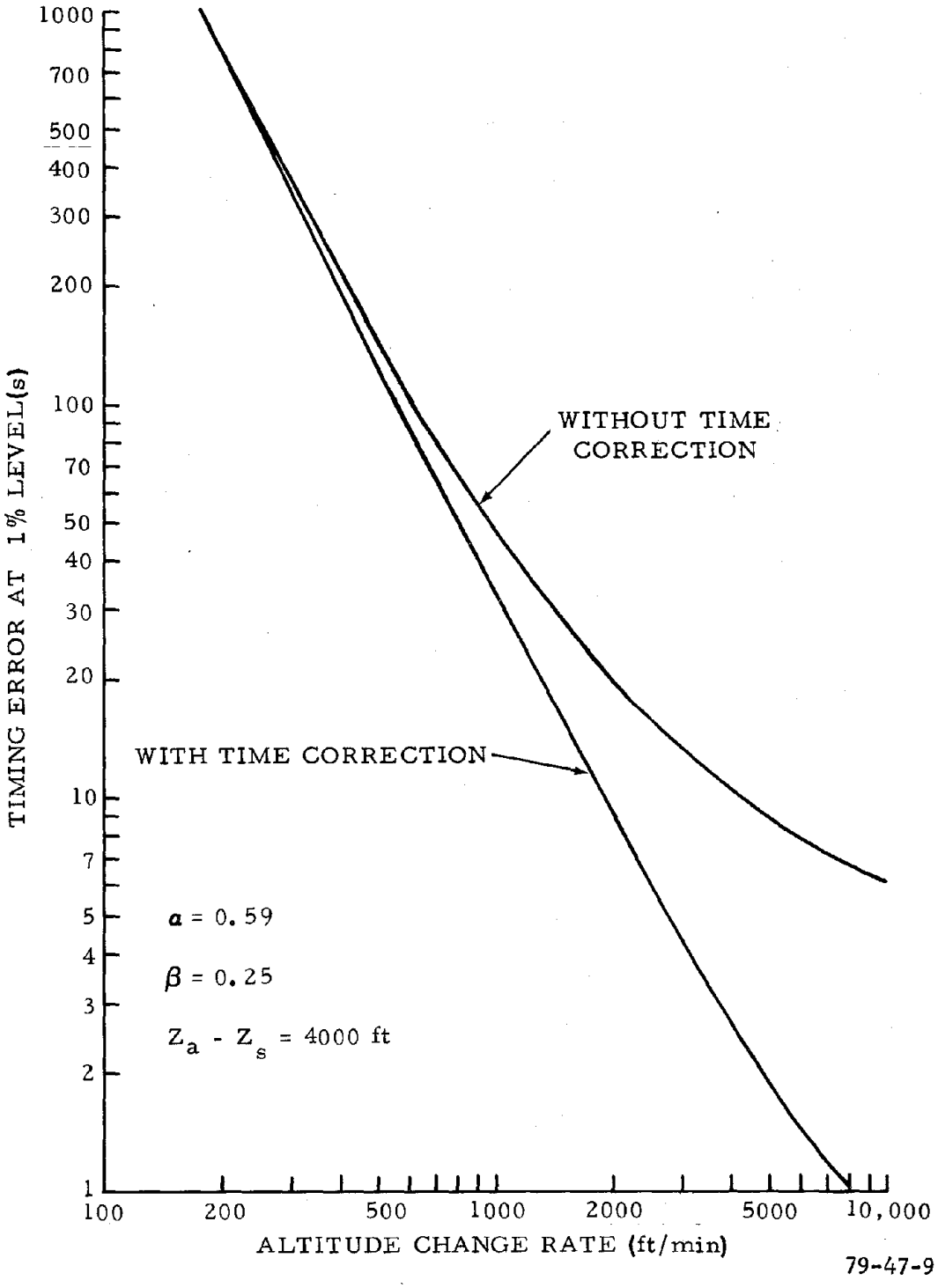

FIGURE 9. TIMING ERRORS AT THE 1-PERCENT LEVEL

highest transition rates. The results obtained in this study should actually be considered as conservative lower bounds to the errors which are observed in practice, because other errors which also influence the performance of the tracking algorithm have not been included. Such errors include finite precision arithmetic, deviations from a linear trajectory such as would be caused by random wind gusts which could introduce an error in the measured altitude greater than one quantization interval, altimeter instrument errors (reference 27), random delays in transmission of the data causing errors in excess of 0.5-second time quantization, and deviations from the assumptions used to obtain the results. An example of this latter case is the fact that it was assumed that the time differences between the time of receipt of the altitude data and the center of the tracking cycle were uniformly distributed and stochastically independent from cycle to cycle. While this may be true considering very long sequences of data, it may not be true for the relatively short periods of time in which vertical maneuvers occur and in which the timing errors may vary periodically as the phase relationship between the tracking algorithm operation and the sensor changes. As a consequence, the peak errors in a particular case may be significantly larger than those predicted by the analysis in this study. For this reason, the time-correction process may have an impact significantly greater than the results of this study indicate, especially when it is considered that it is the occasional extreme errors which cause the false alarms in the surveillance algorithms which use the tracking data. It is unreasonable to continue to use an algorithm designed under an assumption that leads to errors which invalidate the results for the intended purposes under which the algorithm was originally designed.

As a consequence, it is concluded that time correction should be applied to the vertical tracking algorithm just as it is now applied to the horizontal tracking algorithm. In the case when time correction is used, the performance of the altitude tracking algorithm is essentially invariant with respect to the altitude change rate for all rates of practical significance. Previous studies of the vertical tracking algorithm have all identified the need for accurate vertical velocity information (reference 23-26), and in particular, problems have already been identified in the case of high-transition-rate targets (reference 23). It is reasonable to assume that the time-correction process will eliminate, or at least mitigate, the problems associated with high-transition-rate targets so that this solution should be incorporated before other approaches are attempted.

It should also be noted that not only will time correction result in a more accurate estimate of future aircraft position, but the simplicity of the solution is such that it probably has the lowest computational requirements of any possible solution for the following reason. Since the majority of en route traffic is in level flight most of the time (reference 24), in which case special program logic will make the altitude change rate identically zero provided that the altitude datum is in conformance with the assigned altitude (reference 17), all that is necessary to do to determine if time correction must be done is to check for a nonzero change rate, and for the majority of the time, this is the only computation which will be required. It is highly

likely that the computational requirements to perform the time-correction process will be so minimal that the change in the computational resources required to perform the altitude tracking function will be almost undetectable. In fact, the use of time correction may cause a net reduction in the total computational requirements if the more accurate position predictions cause fewer tracks to pass through the initial conflict detection filter, which includes a coarse altitude filter, thereby reducing the number of track pairs which must be subjected to the more detailed processing necessary to detect a conflict. However, regardless of the computational requirements, which are inconsequential even assuming the possibility of no indirect benefits as just discussed, the errors resulting from the lack of time correction appear to be such that this change is absolutely essential to the proper functioning of the altitude tracking algorithm.

Since in the future other advanced air traffic control functions may be implemented which will require altitude predictions, it is recommended that the time-correction process be incorporated into the altitude tracking algorithm in order to insure that the altitude predictions are as accurate as possible. Otherwise, it may be necessary to incorporate less satisfying solutions to the problems caused by high-transition-rate targets which may well impose a far greater computational burden than would be imposed by the time-correction process above and would only have the effect of suppressing the altitude prediction errors rather than eliminating the errors as is done with time correction.

5. REFERENCES

1. Sklansky, J., Optimizing the Dynamic Performance of a Track-While-Scan System, RCA Review, Vol. 18, pp. 163-185, June 1957.

2. Levine, N., A New Technique for Increasing the Flexibility of Recursive Least Squares Data Smoothing, Bell System Technical Journal, Vol. 11, pp. 821-840, May 1961.

3. Benedict, T. R. and Bordner, G. W., Synthesis of an Optimal Set of Radar Track-While-Scan Smoothing Equations, IRE Trans. on Automatic Control, Vol. AC-7, pp. 27-32, July 1962.

4. Simpson, H. R., Performance Measures and Optimization Condition for a Third-Order Sampled-Data Tracker, IEEE Trans. on Automatic Control (Correspondence), Vol. AC-8, pp. 182-183, April 1963.

5. Neal, S. R., Discussion on Parametric Relations for the $\alpha-\beta-\gamma$ Filter Predictor, IEEE Trans. on Automatic Control (Correspondence), Vol. AC-12, pp. 315-317, June 1967.

6. Kanyuck, A. J., Transient Response of Tracking Filters With Randomly Interrupted Data, IEEE Trans. on Aerospace and Electronic Systems, Vol. AES-6, pp. 313-323, May 1960.

7. Singer, R. A. and Behnke, K. W., Real-Time Tracking Filter Evaluation and Selection for Tactical Applications, IEEE Trans. on Aerospace and Electronic Systems, Vol. AES-7, pp. 100-110, January 1971.

8. Wilson, K. C., An Optimal Control Approach to Designing Constant Gain Filters, IEEE Trans. on Aerospace and Electronic Systems, Vol. AES-8, pp. 836-842, November 1972.

9. Bhagavan, B. K. and Polge, R. J., Performance of the G-H Filter for Tracking Maneuvering Targets, IEEE Trans. On Aerospace and Electronic Systems (Correspondence), Vol. AES-10, pp. 864-866, November 1974.

10. Schooler, C. C., Optimal $\alpha-\beta$ Filters for Systems with Modeling Inaccuracies, IEEE Trans. on Aerospace and Electronic Systems, Vol. AES-11, pp. 1300-1306, November 1975.

11. Cantrell, B. H., Behavior of $\alpha-\beta$ Tracker for Maneuvering Targets Under Noise, False Target and Fade Conditions, Naval Research Laboratory Report 7434, NTIS No. AD748-993, August 1972.

12. Cantrell, B. H., Description of an Alpha-Beta Filter in Cartesian Coordinates, Naval Research Laboratory Report 7548, NTIS No. AD759-011, March 1973.

13. Cantrell, B. H., Gain Adjustment of an Alpha-Beta Filter with Random Updates, Naval Research Laboratory Report 7647, NTIS No. AD774-087, December 1973.

14. Cantrell, B. H., Adaptive Tracking Algorithm, Naval Research Laboratory Memorandum 3037, NTIS No. AD-A011-122, April 1975.

15. Navarro, A.M., General Properties of Alpha Beta, and Alpha Beta Gamma Tracking Filters, Physics Laboratory Report PHL 1977-02, NTIS No. N77-24347, January 1977.

16. Cadzow, J. A., Discrete-Time Systems, Prentice-Hall, Englewood Cliffs, New Jersey, 1973.

17. Computer Program Functional Specification: Automatic Tracking, NAS-MD-321, NAS Library No. 78-0787, September 1978.

18. User's Guide for Conflict Alert, NASP-9275-01, NAS Library No. 76-0174, March 1976.

19. Meditch, J. S., Stochastic Optimal Linear Estimation and Control, McGraw-Hill, New York, N.Y., 1969.

20. Lefferts, R. E., Calculation of the Correlation Region Size for Use With Alpha-Beta Tracking Filters, National Aviation Facilities Experimental Center, Report No. FAA-NA-79-15, April 1979.

21. Shaw, N. K. and Simolunas, A. A., System Capability of Air Traffic Control Radar Beacon System, Proc. of the IEEE, Vol. 58, pp. 399-407, March 1970.

22. Jolitz, G., ATC/Airborne CAS Compatibility--An Analysis of Field Derived Data, National Aviation Facilities Experimental Center, Report FAA-RD-75-228, June 1976.

23. Hauser, S. J. Jr., Dodge, P. O., and Steinbacher, J. G., Computer Program Functional Specifications for En Route Conflict Alert, The MITRE Corp., McLean, VA, MTR-7311, September 1976.

24. Kister, W. E., Paretti, L. C., and Roberts, D. S., Conflict Prediction Final Report, IBM Federal Systems Division, Atlantic City, NJ, NAS Library No. 78-0788, June 1970.

25. Greenwood, D. R., et al., Jacksonville Tests of Conflict Alert--Test Analysis Report, The MITRE Corp., McLean, VA, MTR-6371, May 1973.

26. Greenwood, D. R., Hauser, S. J., and Papian, L. E., En Route Conflict Alert Analysis Report of Tests Conducted at NAFEC, The MITRE Corp., McLean, VA, MTR-6640, March 1974.

27. Gilsinn, J. F. and Shier, D. R., Mathematical Approaches to Evaluating Vertical Separation Standards, National Bureau of Standards, Washington, D.C., FAA-EM-76-12, May 1976.

28. Aircraft Climb and Descent Characteristics, FAA Order 7210.35A, December 1978.