COPY 2 3
8/79
FAA WJH Technical Center
00092490

NAFEC-WMSC INTERFACE

Technical Note 79-1

Project 131-401-824
Mass Weather Dissemination Exploratory Design

NAFEC LIBRARY
FEB 80

By

Dennis A. Steelman
Electronic Engineer

Reviewed by:

George Barboza
Chief, Flight Service Station Branch

August 1979

Flight Service Station Branch
Simulation and Analysis Division
National Aviation Facilities Experimental Center
Atlantic City, New Jersey 08405

Acknowledgements

The author wishes to express his appreciation to:

1. Frank Staiano for his project direction.

2. Philip Lui for developing the communications software between the interface and the host processor.

3. Gordon Hickham and Larry Brandt for their valuable technical assistance.

4. Howard Carlson for the construction of the interface.

Purpose

The purpose of this technical note is to document the development of a microprocessor-based interface between the National Aviation Facilities Experimental Center (NAFEC) and the Weather Message Switching Center (WMSC). The interface facilitates the sharing of a single 1200 baud drop poll line originating at the WMSC between two minicomputers located at NAFEC. All communications protocol, in accordance with American National Standards Institute (ANSI) Standard 3.28 subcategories 2.5 and A4, is handled by the interface. The interface was developed for the purpose of allowing two separate computers to share a single data line to the WMSC in order to provide current aviation weather data for the mass weather dissemination effort and the interactive graphics effort currently underway at NAFEC.

Functional Description

The heart of the NAFEC-WMSC Interface is a single 8-bit Z-80 microprocessor which handles data communications between three full duplex, asychronous, Electronic Industry Association (EIA) standard RS-232C I/O ports. Support circuitry consists of 768 bytes of eraseable programmable read only memory (EPROM), which contains the interface control firmware, 4 kilobytes of static random access memory (RAM) and appropriate handshaking logic. The EPROM storage may be expanded to 1 kilobyte without circuit modification. Figure 1 shows the interface hardware configuration.

The Z80 microprocessor operates at a clock frequency of 894.886KC to allow interfacing to the comparatively slow EPROMS. The microprocessor clock pulses are generated by a crystal oscillator. All data transfers through the interface are controlled by the microprocessor in accordance with the interface firmware stored in the EPROMs. The interface constructs requests initiated by either NAFEC minicomputer in accordance with the ANSI standard. Simultaneous requests issued by both minicomputers are operator transparent.

The operator of either NAFEC minicomputer enters a request to the WMSC by simply typing the appropriate request format on a CRT terminal. This causes the minicomputer to generate a service request interrupt to the interface's microprocessor. The textual portion of request is then formatted by the interface in accordance with the ANSI protocol and transmitted to the WMSC at the appropriate poll time. Upon receiving the select sequence for the requested information package, the microprocessor acknowledges the select, determines which minicomputer generated the request, and begins transferral of the data to that minicomputer. The minicomputer then stores the information on disc and displays it to the operators CRT. If the information exceeds one CRT page it may be recalled from the disc file without further utilization

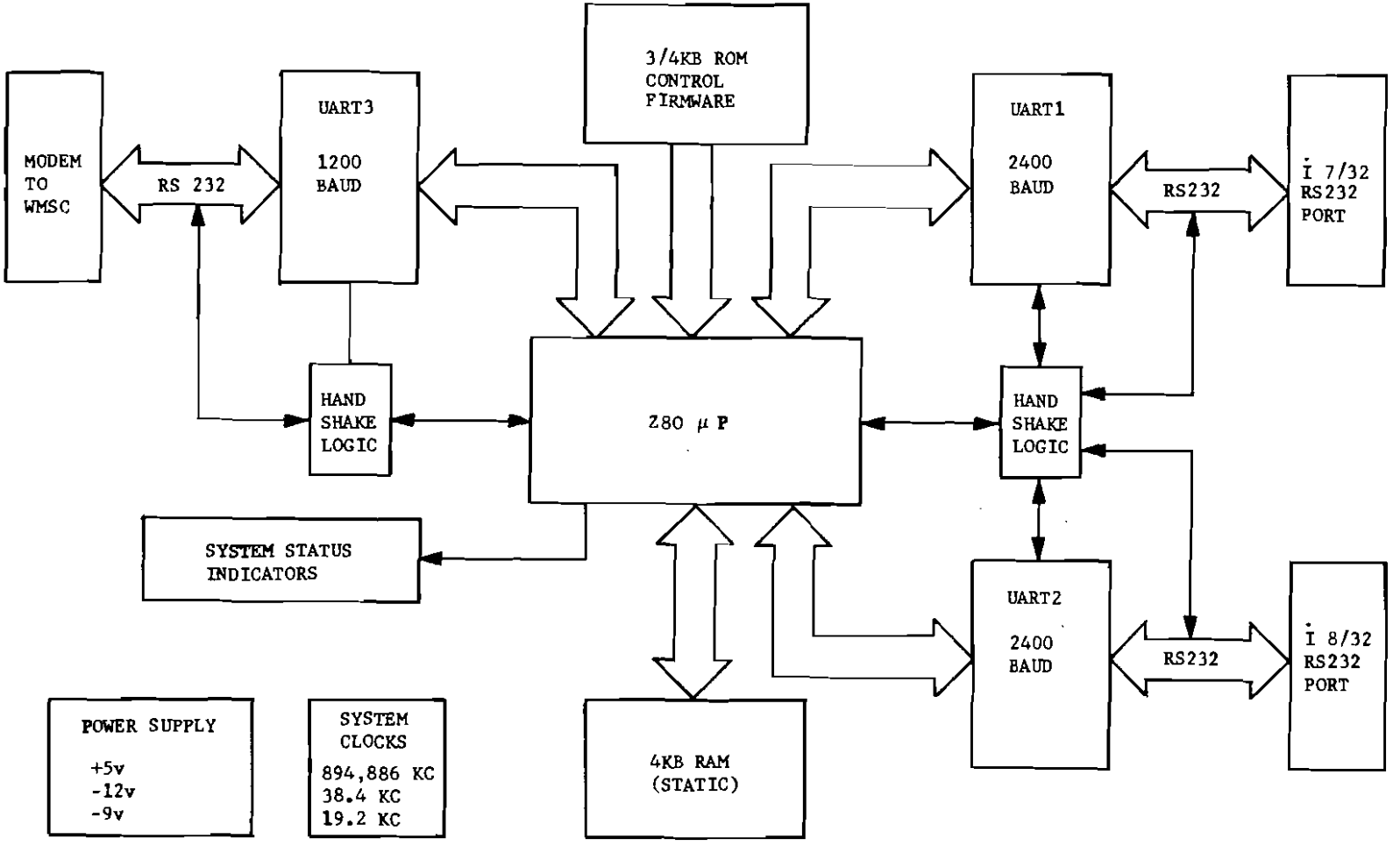

NAFEC WMSC INTERFACE
fig. 1

of the interface and WMSC processors. More detailed information regarding the operations involved may be obtained from figs. 2 through 7, shown in appendix A. Appendix B provides a sample output of the WMSC communications as requested and received by NAFEC.

The three asynchronous ports are constructed using universal asynchronous receiver transmitters (UARTs). The two ports connected to the in-house minicomputers are configured for 2400 baud, 8 data bits, 1 stop bit and no parity. These two ports have the ability to interrupt the microprocessor at given times in order to request service. The I/O port which is connected to the WMSC is configured for 1200 baud, 8 data bits, 1 stop bit and no parity. This port is not capable of generating interrupts to the microprocessor. Servicing of this port is accomplished by means of a scan routine. The actual communications between NAFEC and the WMSC is carried out in seven bit, even parity format. The above configuration of the interface UARTs permits data transfers to be accomplished with a minimum of parity and bit manipulations. Clock pulses for the UARTs are generated by a single astable oscillator which is independent of the main system clock.

The main purpose of the handshake logic associated with the UARTs is to allow the microprocessor to synchronize its data transfers to the much slower serial transmission rates. This logic also provides the interface with the capability to sample the RS-232C status line pair, request to send / clear to send (RTS/CTS), of the connected in-house minicomputers. This insures that no data will be lost due to read lags inherent in some large mincomputers due to operating system overhead. The handshake logic also provides for an 8-bit visual diagnostic display.

The 4 kilobytes of RAM provides space for temporary storage of operational variables, a dynamically alterables lookup table, and the operational stack in the first 256 bytes. The remainder of the RAM is used as a buffer for data transferral between the WMSC processors and the NAFEC processors.

When a requested message byte is received from the WMSC, it is tested for parity and printability (ASCII codes X '20' to X '5D'). If these conditions are satisfied the byte is stored in the transfer buffer. Characters with incorrect (odd) parity are replaced with a question mark. Nonprintable characters are not stored in the buffer for transfer to the requesting computer. The RTS/CTS line of the appropriate processor in then sampled. If the result of this test indicates that the minicomputer is ready to accept data the byte is transferred. If the transfer condition is not met, another byte is fetched from the WMSC port and the process repeated.

Upon receiving the ASCII code ETX from the WMSC the interface acknowledges the transfer of a data buffer. The data coming from the WMSC is then scanned to determine if the data which will follow is a continuation of the present information package or a different item. If the information to follow is a continuation of the same request, a buffer counter is incremented and the process continued until the end of transferral is detected. All remaining data in the transfer buffer is then transmitted to the requester. Since the transfer buffer is cylindrical and has independent receive and transmit pointers a data lag of 3,839 bytes may occur without loss of data.

The interface is capable of functioning in two modes. It may be connected to two computers thereby functioning as a local data distribution switch and formatter. The interface may also function in a stand alone mode. In this case it maintains the proper poll response for no service required (ASCII code EOT). This prevents the WMSC processor from taking corrective action to prevent polling delays to other drops on the same distribution circuit.

It has been previously stated that the connections between the interface and the on-site computers are in accordance to EIA Standard RS-232C. This allows the interface to be host computer independent. The only requirement being that the on-site computer possess an I/O port conforming to RS-232C. In most cases, a simple user level routine will be the only host computer software required to support communications with the interface.

Suggestions for Future Operation

Preliminary studies of the operation of the interface connected to an Interdata 7/32 minicomputer have shown an approximate request reply turnabout time of 7 to 15 seconds depending upon the amount of data requested. These figures assume that the WMSC is in the poll mode and has no previously acknowledge requests to service. A large portion of the turnabout time may be attributed to the time required for the WMSC processors to prepare the requested data for transmission. The actual additional delay generated by the interface when servicing a single request is less than 0.9 seconds. This interface delay assumes a request of up to 60 ASCII characters in length.

A new host computer routine is being developed which will issue and receive varied requests for information to the WMSC at given times without operator intervention. This data will then be used to establish and continually update an in-house data base of those WMSC reports pertinent to the local area. This will result in an operator request reply delay of approximately 2 seconds for any given report stored in the local data base. Requests for information not stored in the in-house data base will automatically

be routed to the WMSC via the interface without extra operator intervention. The operator turnabout time will, of course, return to approximately 7 to 15 seconds in this case. In this mode of operation, a single in-house minicomputer may be used to correlate data to and from any number of operational positions connected to the facility.

When more than one host processor is connected to the interface there is no requirement for their interface communication routines to be identical. Provisions exist within the interface to enable the correlation of up to 26 requests, from either or both on-site processors, to the WMSC at any given time.

Presently, the NAFEC-WMSC interface is capable of supporting two independent on-site computers. The architecture of the interface is such that it may be expanded to support a larger number of hosts with only minor hardware and firmware modifications. The limiting factor on the number of hosts which may be supported may be the inability of the WMSC line to handle more than one request at a time.

As previously stated, the interface is host computer independent. The host computer may range from a large time-share main frame, such as an IBM 370® to a dedicated microcomputer, such as a TRS-80®. The only requirements being an RS-232C port and sufficient storage in which to store the reply.

The total cost of materials for constructing the NAFEC-WMSC interface prototype was less than $500 including power supplies and chassis.

APPENDIX A

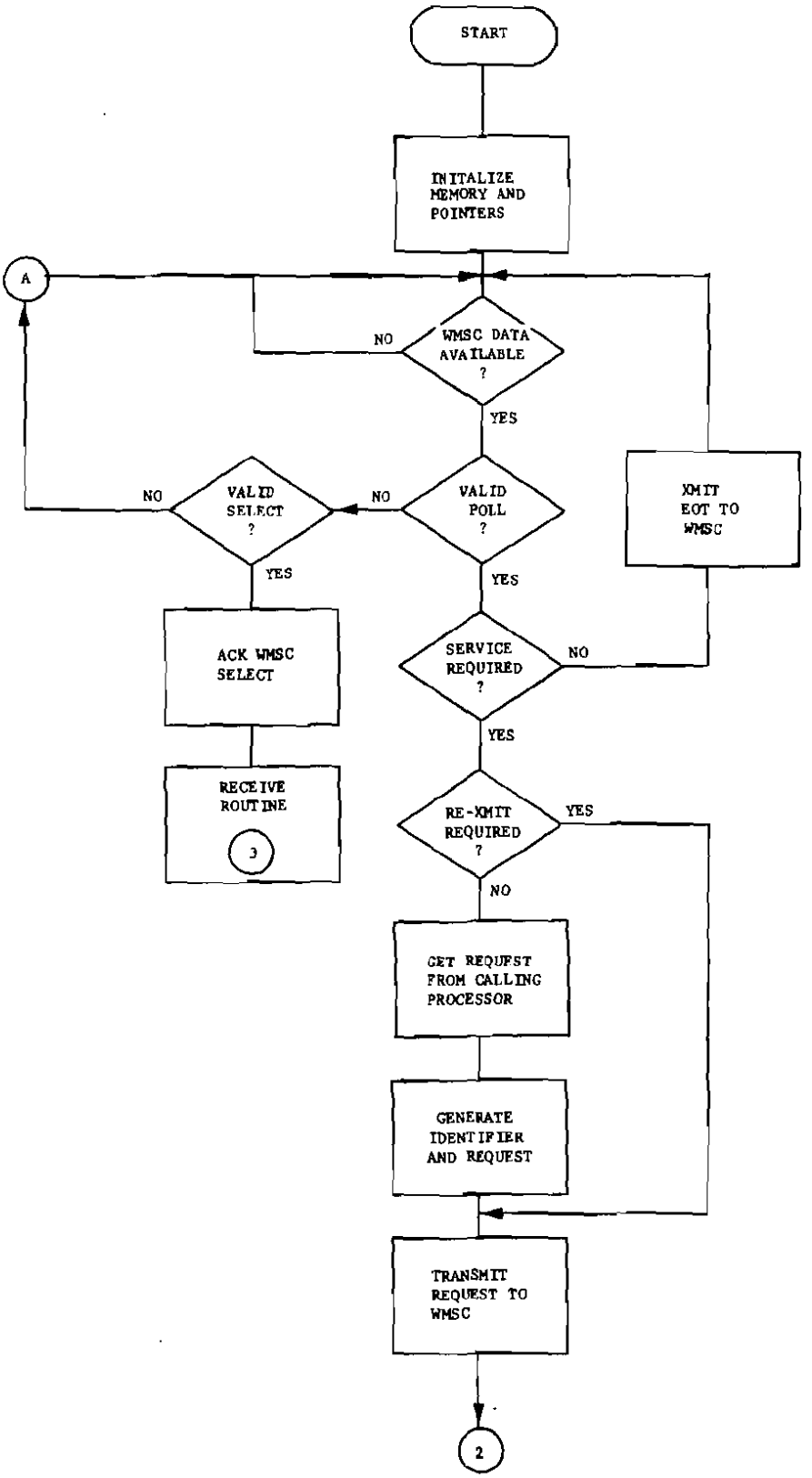

NAFEC WMSC INTERFACE FIRMWARE
fig. 2

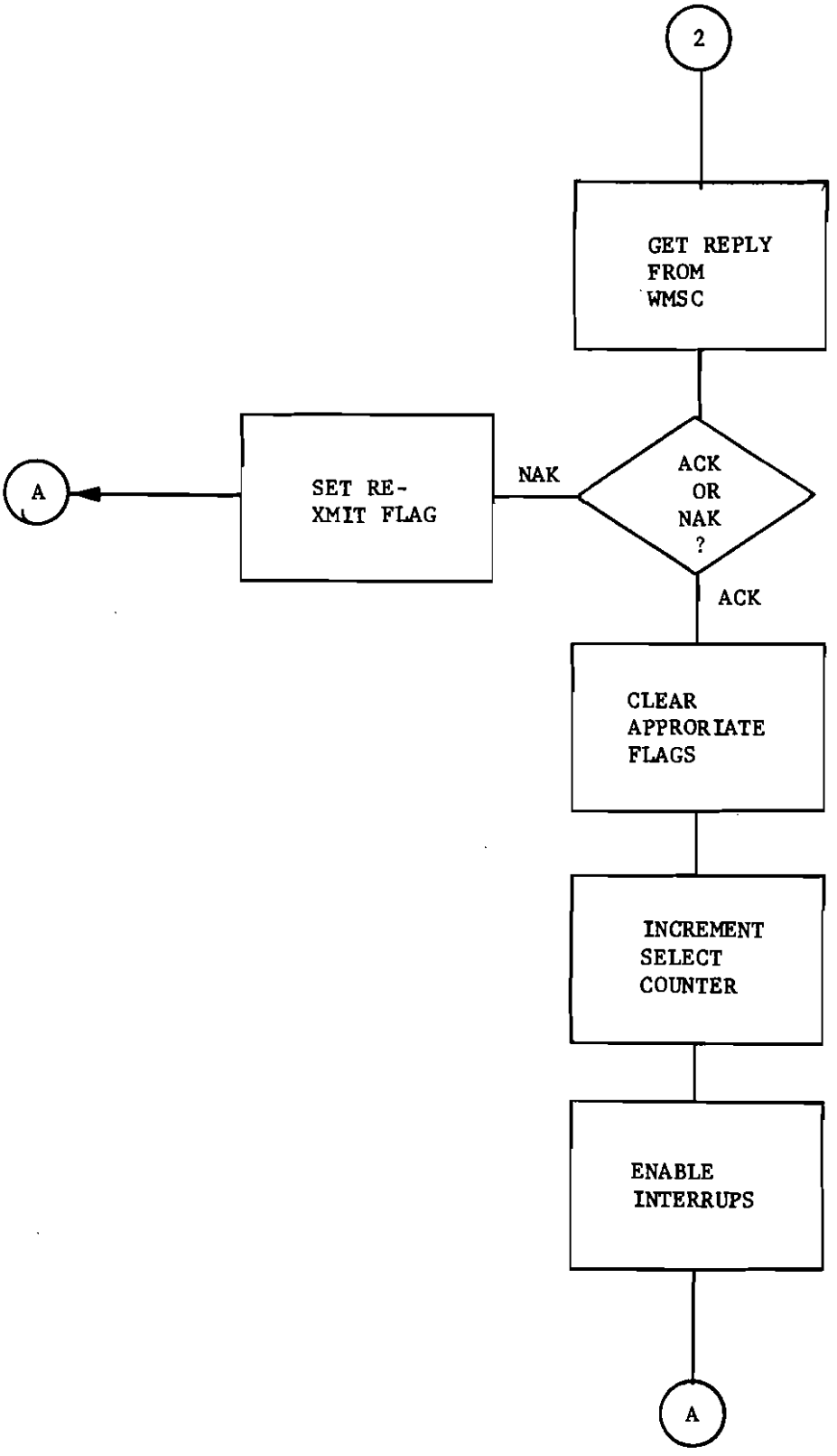
2
GET REPLY FROM WMSC
ACK OR NAK ?
NAK
SET RE-XMIT FLAG
A
ACK
CLEAR APPRORIATE FLAGS
INCREMENT SELECT COUNTER
ENABLE INTERRUPS
A

fig. 3

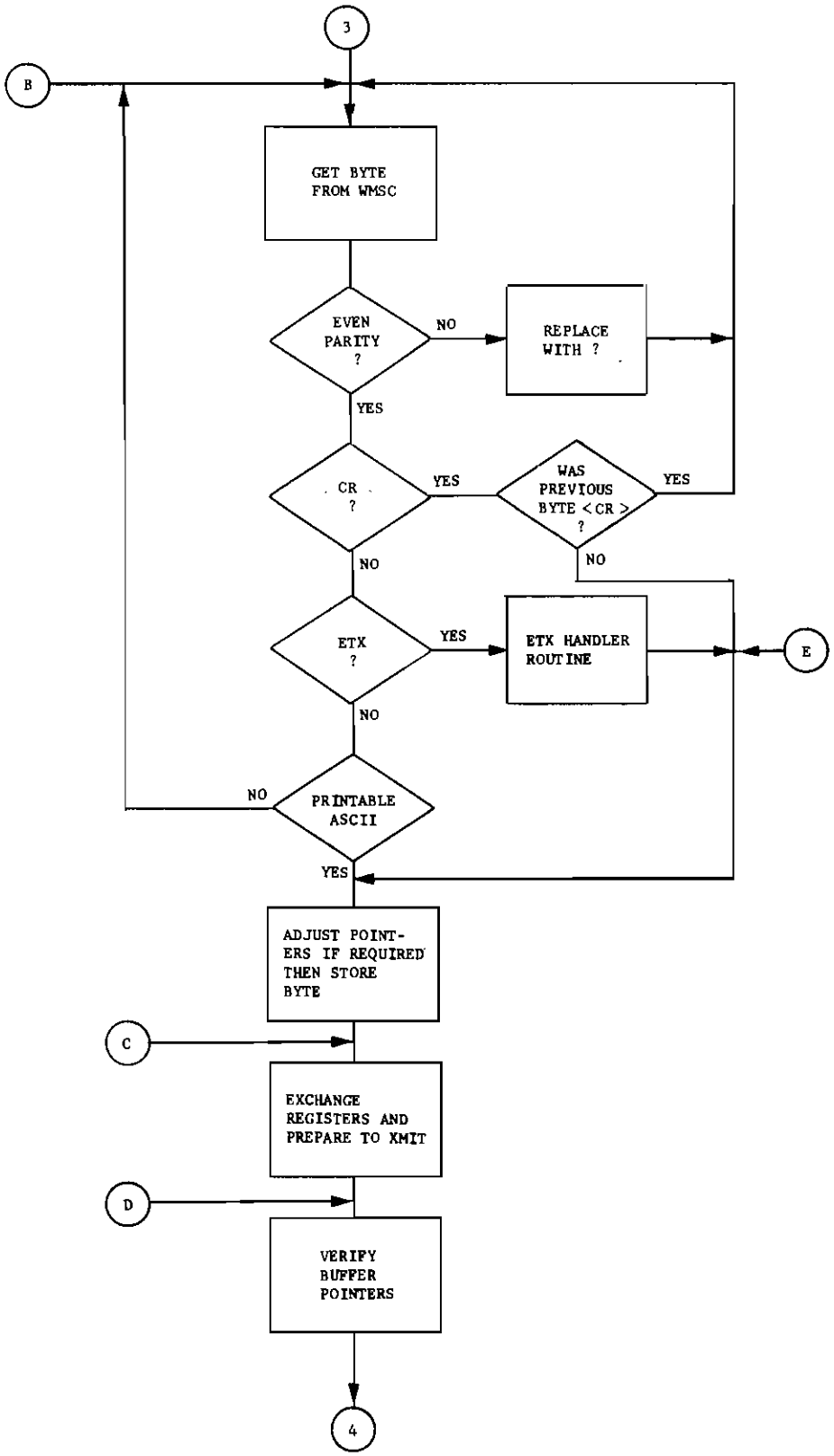

fig. 4

FAA WJH Technical Center
00092490

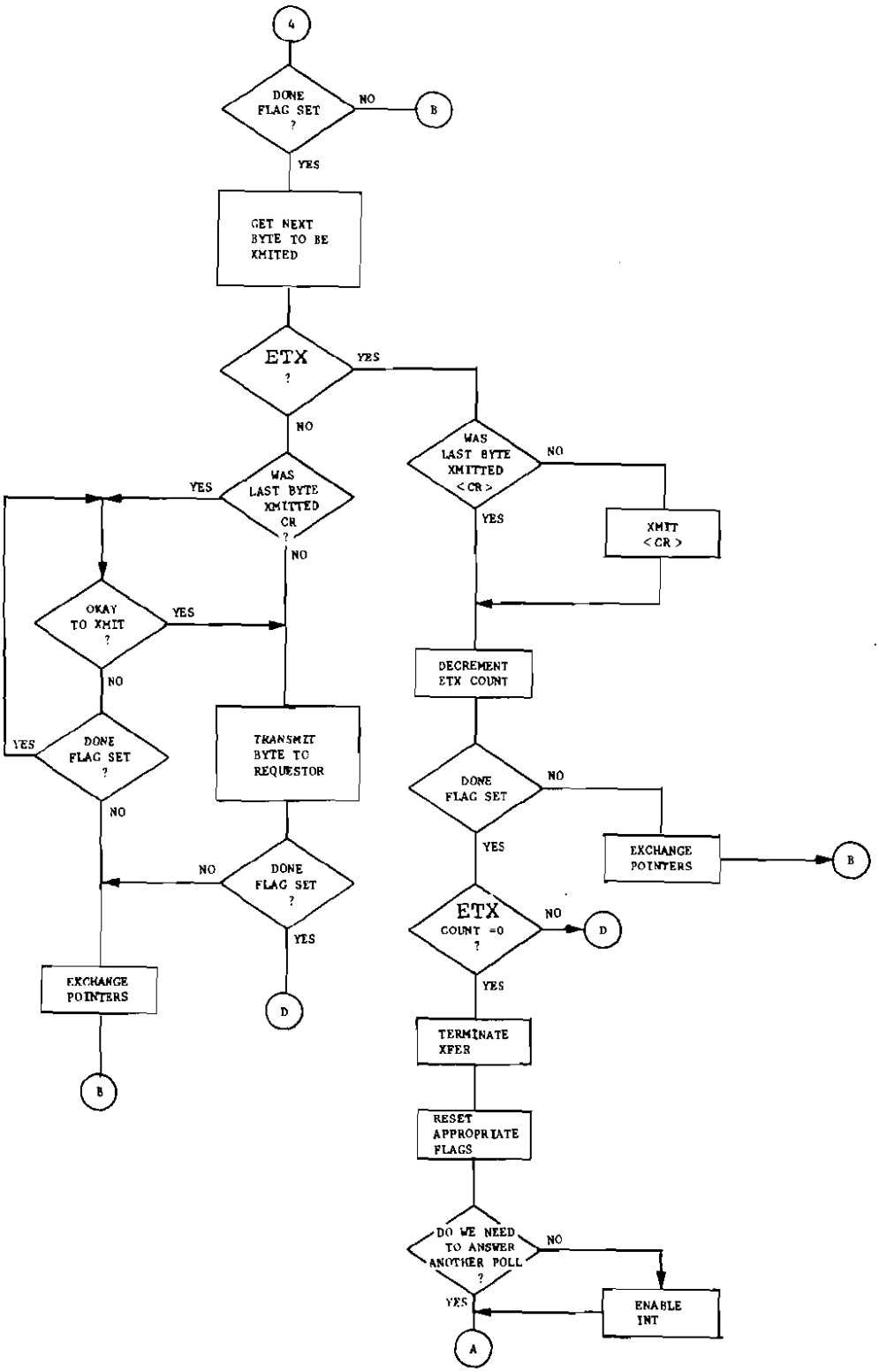

RECEIVE ROUTINE

fig. 5

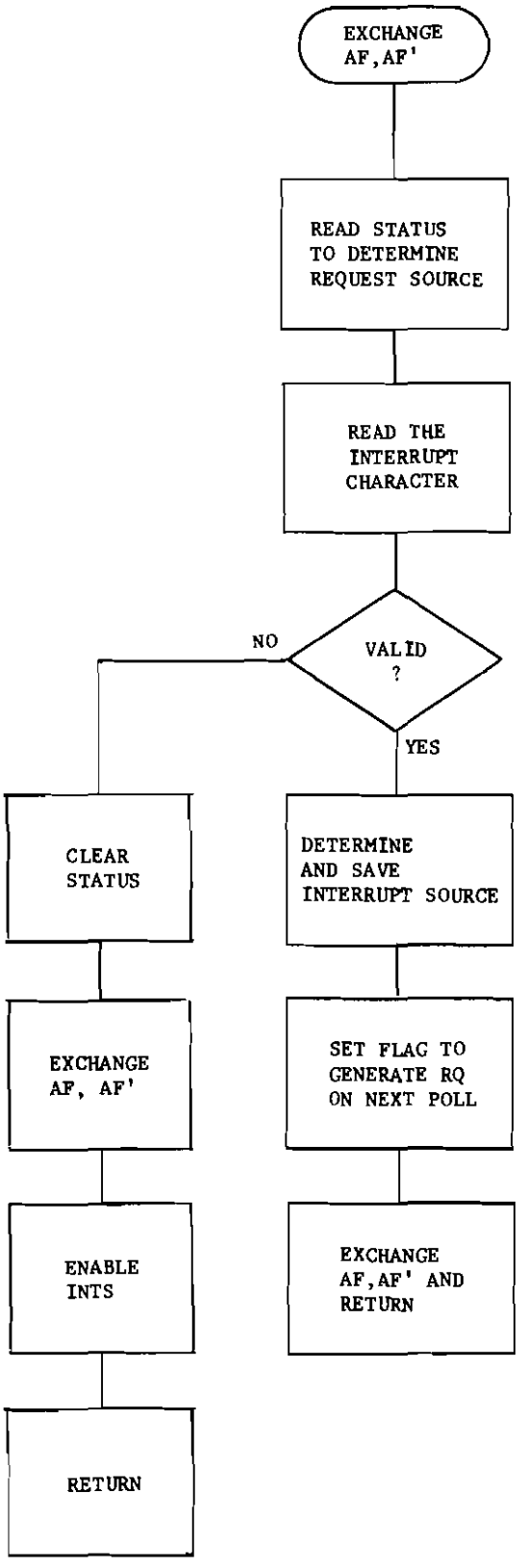

INTERRUPT SERVICE ROUTINE

fig. 6

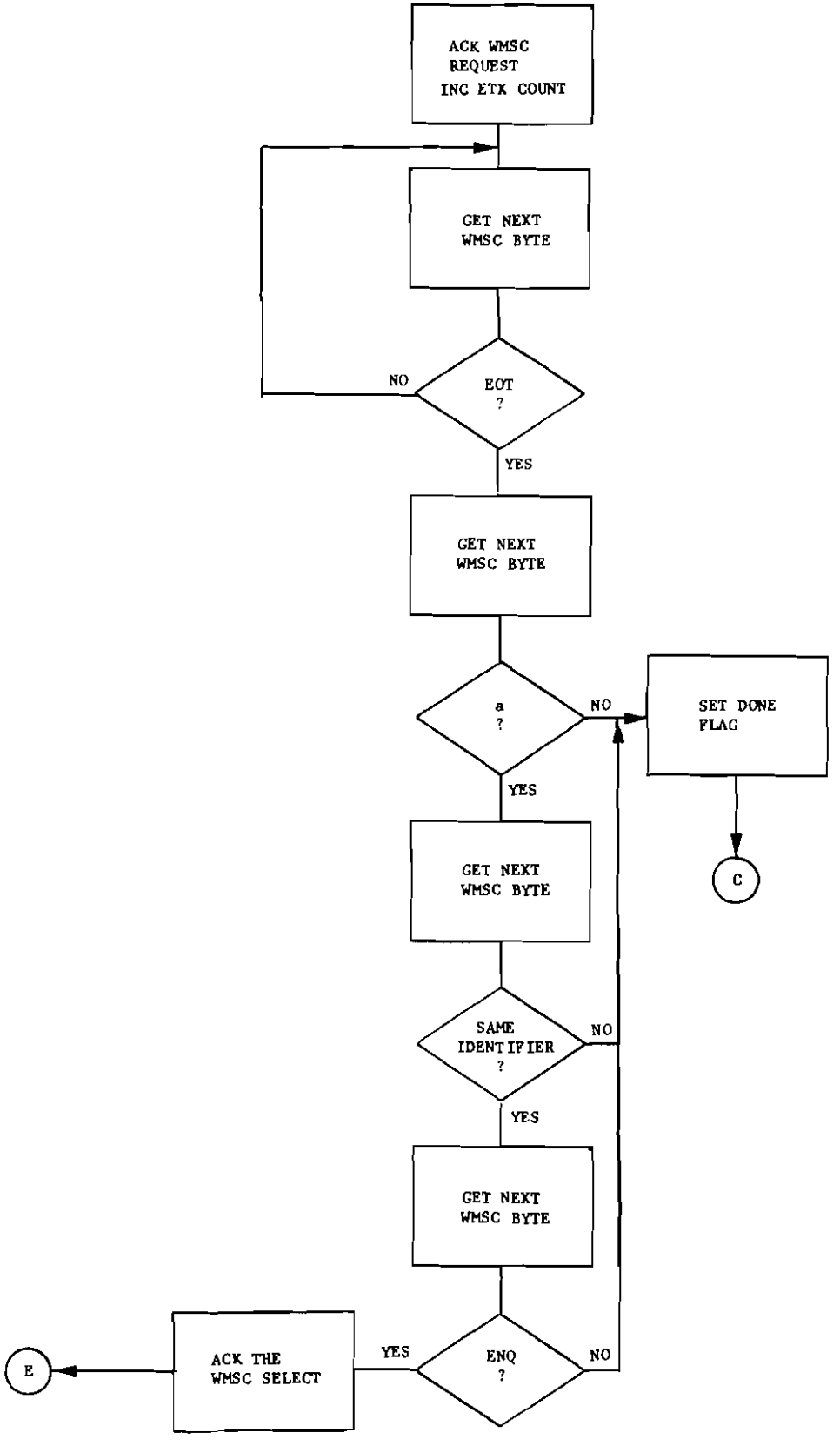
ACK WMSC
REQUEST
INC ETX COUNT
GET NEXT
WMSC BYTE
EOT
?
NO
YES
GET NEXT
WMSC BYTE
a
?
NO
SET DONE
FLAG
C
YES
GET NEXT
WMSC BYTE
SAME
IDENTIFIER
?
NO
YES
GET NEXT
WMSC BYTE
ENQ
?
NO
YES
ACK THE
WMSC SELECT
E

ETX ROUTINE

APPENDIX B

SAMPLE NAFEC-WMSC COMMUNICATIONS

SINGLE REQUEST

```
R > RQ ACY SA

RQ ACY SA

R >
AACY SA 1652 M22V BKN 80 BKN 10 162/80/71/3002/001/CIG 20V24

KEY IN YES TO READ TAPE!
```

MULTIPLE REQUEST

```
R > RQ ACY FT JFK SA MIV SA

RQ ACY FT JFK SA MIV SA

R >
AACY 281515 20 SCT C40 BKN SCT V BKN. 17Z 30 SCT 100 SCT SCT V BKN
 LYRS. 03Z C30 BKN CHC C12 OVC 2TRW-F. 07Z C20 OVC OCNL C10 OVC
 1TRW. 09Z MVFR CIG TRW F..
JFK SA 1651 E25 BKN 4HK 169/80/72/1910/003
!JFK 08/067 JFK ILS LOC 22L OTS
!JFK 08/079 JFK ILS LOC 4L OTS
!JFK 08/082 CRI DME OTS
!JFK 08/084 JFK ILS LOC 13L OTS.
MIV SA 1755 E15 BKN 30 BKN 200 BKN 7 169/82/72/1705/002/BLD UP ALQDS
!MIV 07/012 AIY CRANE 300AGL .6 EAST UNLGTD
!MIV 07/025 AIY CRANE 100AGL 1500 AER 34 DAY
!MIV 08/004 25N TOWER 500AGL 2NNE UNLGTD
!MIV 08/025 MIV 1-19 CLSD
!MIV 08/027 MIV 14-32 CLSD

KEY IN YES TO READ TAPE!
```

TWEB REPORT

R > RL 262

RL 262

R >
A025 TWEB 281806 PHL LCL VCNY...2 TO 4 THSD FT AGL SCT TO BKN WITH CHC OF CIGS AOA 1 THSD FT IN CHC OF TSHWRS. VSBY...3 TO 6 MI IN HAZE XCPT CHC OF 1 TO 3 MI IN TSHWRS. OTLK 06 TO 18Z...IFR CIG TRW F BCMG MVFR CIG TRW H..
027 TWEB 281806 NYC/PHL/DCA...2 TO 4 THSD FT AGL SCT TO BKN WITH CHC OF CIGS AOA 1 THSD FT IN TSHWRS. VSBY...3 TO 6 MI IN HAZE XCPT CHC OF 1 TO 3 MI IN TSHWRS.
028 TWEB 281806 ACY/PHL/HAR...2 TO 4 THSD FT AGL SCT TO BKN WITH CHC OF CIGS AOA 1 THSD FT IN TSHWRS. VSBY...3 TO 6 MI IN HAZE XCPT CHC OF 1 TO 3 MI IN TSHWRS.
032 TWEB 281806 DCA/BWI LCL VCNTY...CIG NR 3 THSD FT VSBY 4-7 MIS IN H. SCT TSTMS WITH CIG NR 1 THSD FT AND VSBY BLO 3 MIS.
033 TWEB 281806 ORF-SBY-PHL...CIG NR 3 THSD FT VSBY 4-7 MIS IN H. SCT TSTMS WITH CIG NR 1 THSD FT AND VSBY BLO 3 MIS.
BOS SYNS 281806...A CDFNT SE OF CAPE COD CONTS TO DRFT SEWD BUT WL BCM STNRY EXTNDG E TO W OVR CSTL WTRS S OF NEW ENG.
WBC SYNS 281806...SWLY FLO OF MOIST AIR CONTG OVR RTES.
BOS WA 281520
AIRMET QUEBEC 1 281520-282120
MA RI NY ADJ CSTL WTRS
FM 40E PVD 200E PVD 120S PVD 45NNE ACY 40SW PVD
CIG AND VSBY BLO 010 AND 3 MI IN ST AND FOG. COND CONTG OVR CSTL WTRS BYD 2120Z.
AC
FDUS FDUS1 KWBC 281742
DATA BASED ON 281200Z
VALID 290000Z FOR USE 1800-0300Z. TEMPS NEG ABV 24000

FT	3000	6000	9000	12000	18000	24000	30000	34000	39000
JFK	2110	2315+15	2316+10	2417+05	2520-08	2623-20	272736	272945	262755
EMI	2209	2315+15	2317+11	2318+05	2321-08	2422-20	252536	252745	242955

FDUS FDUS2 KWBC 281742
DATA BASED ON 281200Z
VALID 290600Z FOR USE 0300-0900Z. TEMPS NEG ABV 24000

FT	3000	6000	9000	12000	18000	24000	30000	34000	39000
K	2112	2316+16	2319+11	2321+05	2325-08	2426-20	242736	253045	253755
EMI	2112	2316+16	2319+11	2321+05	2326-09	2327-20	232935	243145	253954

KEY IN YES TO READ TAPE!