P7232.01

FEDERAL AVIATION ADMINISTRATION
TECHNICAL CENTER LIBRARY
ATLANTIC CITY INT'L ARPRT, NJ 08405

Program Implementation Plan

for the

Center-TRACON Automation System (CTAS)

October 15, 1994

U. S. DEPARTMENT OF TRANSPORTATION
FEDERAL AVIATION ADMINISTRATION

Distribution: A-W(HD/LR/HT/CQ/SU/TQ/NR/NA/AP/NC/NW/NN/FE/SE/TZ/TR/TM/TP/NS/OP/OS/LM/FZ)-3;A-X(AT/AF/LG)-3;A-YZ-2;A-FAF-0(LTD);A-FAT-0(LTD)

Initiated by: ARD-40

FOREWORD

This document defines the implementation plan for the Center-TRACON Automation System (CTAS); this information should be the most accurate and current available at this time. A PIP provides management direction and technical guidance in the implementation of a program to all levels of the FAA from program inception through commissioning. It is an evolving document which will be updated and refined in detail over the life of the program through review, comment, analysis, and modification of the information contained within.

The purpose of the review by RAPMs and their designated regional and site personnel is both to provide information about the program's plans and implementation strategies and to provide an opportunity to assess the viability of proposed strategies in relation to regional and facility constraints and capabilities. The PIP is **NOT** an order and does not require concur/nonconcur sign-off by regional management. The review and the feedback you provide is the foundation of the Transition/Implementation Information Exchange (TIE) which is a process that occurs during each phase of the program's acquisition cycle. Results of each TIE and the status of action plans to resolve issues identified during the TIE will be summarized in the subsequent version of the PIP. The purpose of the TIE is to identify and set in motion actions to resolve program implementation issues as early in the acquisition cycle as possible. The review and input from personnel in the regions and deployment sites are key to the success of the TIE process.

If the information provided in the PIP is fully acceptable and consistent with regional and/or site capabilities, then notification that the review has been completed and that no deficiencies or concerns were noted will be appreciated. If, however, there is additional information required, or if reviewers identify technical, logistical, or tactical inconsistencies or concerns which are outside local (i.e., site or regional office) capability to resolve, please bring the nature of the concern to the APMNI's attention as soon as possible. The APMNI will assure that the concern is addressed by the appropriate member(s) of the CTAS Implementation Management Team.

John D. Rekstad, ARD-40
TATCA Program Manager

Wilmer Hunter, ANS-200
Manager, Implementation Management Division

3.1 Summary of Maintenance Operations Impacts 9
3.1.1 Transitory State 9
3.1.2 Operational State 9

3.2 AF Procedural Changes 9
3.2.1 Preventive Maintenance 9
3.2.2 Corrective Maintenance 9
3.2.3 Software Maintenance 9
3.2.4 System Operations/Monitoring 9
3.2.5 System Certification 9
3.2.6 Personnel Certification 9
3.2.7-n (others as needed) 10

3.3 Facilities and Equipment 10

3.4 Systems Maintenance 10

3.5-3.19 (Reserved) 10

3.20 Status Assessment 10

4.0 AIR TRAFFIC OPERATIONS 11

4.1 Summary of AT Operational Impacts 11
4.1.1 Transitory State 11
4.1.2 Operational State 11

4.2 AT Procedural Changes 11
4.2.1 ATC Operational and Management Procedures 11
4.2.2 Flight Procedures/Standards 11
4.2.3 Administrative and Management Procedures 11
4.2.4 Software Verification Procedures 11
4.2.5 Inter-facility Procedures 11
4.2.6 Personnel Certification Procedures 12
4.2.7 System Back-up/Cutover Procedures 12

4.3 AT Implementation Responsibilities 12

4.4-4.19 (Reserved) 12

4.20 Status Assessment 12

5.0 SYSTEM CONFIGURATION AND ENGINEERING 13

5.1 NAS Level Architecture 13
5.1.1 NAS Target State 13
5.1.1.1 Host Software Modifications 13
5.1.1.2 ISSS Software Modifications 13
5.1.1.3 FDAD Software Modifications 13
5.1.1.4 ARTS IIIA Common Interface Modifications 13
5.1.1.5 ARTS IIIE Modifications 13
5.1.2 Inter-Program interface 14

5.1.2.1 Interfaces to Adjacent ARTCCs and TRACONs 14
5.1.2.2 Interfaces to Host (ARTCC) and ARTS III (TRACON) Computers 14
5.1.2.3 Interfaces to AERA 14
5.1.2.4 Interfaces to ETMS 14
5.1.2.5 Interfaces to FAATSAT 14

5.2 Platform Architecture 14
5.2.1 Interim Platform Configuration 14
5.2.2 Target State Configuration 14

5.3 Subsystem Level Architecture 14
5.3.1 Hardware 15
5.3.1.1 CTAS Processing Equipment (CPE) HWCI-1 15
5.3.1.2 Traffic Management Station (TMS) HWCI-2 15
5.3.1.3 System Management Station (SMS) HWCI-3 15
5.3.1.4 TATCA Interface Unit (TIU) HWCI-4 15
5.3.1.5 PAMRI Emulator (PE) HWCI-5 20
5.3.1.6 ARTS Data Unit (ADU) HWCI-6 20
5.3.2 Software 20
5.3.2.1 Operating Environment (OE) CSCI-1 20
5.3.2.2 Execution Manager (XM) CSCI-2 20
5.3.2.3 Communications Manager (CM) CSCI-3 20
5.3.2.4 Route Analysis (RA) CSCI-4 20
5.3.2.5 Trajectory Synthesis (TS) CSCI-5 20
5.3.2.6 Dynamic Planner (DP) CSCI-6 20
5.3.2.7 Traffic Management Coordinator's Graphical User Interface (TMC-GUI) CSCI-7 21
5.3.2.8 Data Recording and Playback (DRP) CSCI-8 21
5.3.2.9 Weather Interface (WX) CSCI-9 21
5.3.2.10 PAMRI Emulator Interface (PE-I) CSCI-10 21
5.3.2.11 PAMRI Emulator Software (PE-S) CSCI-11 21
5.3.2.12 Data Analysis (DAN) CSCI-12 21
5.3.2.13 Profile Selector (PFS) CSCI-13 21
5.3.2.14 TIU Interface (TIU-I) CSCI-14 22
5.3.2.15 TIU Software (TIU-S) CSCI-15 22
5.3.2.16 Adaptation, Validation, and Analysis (AVA) CSCI-16 22
5.3.2.17 ARTS Data Unit Interface (ADU-I) CSCI-17 22
5.3.2.18 ARTS Data Unit Software (ADU-S) CSCI-18 22
5.3.2.19 Traffic Management Interface (TMI) CSCI-19 22
5.3.3 Physical Specification 22

5.4-5.19 (Reserved) 22

5.20 Status Assessment 22

6.0 PHYSICAL FACILITIES 24

6.1 Real Estate 24
6.1.1 Real Estate Requirements 24
6.1.2 Real Estate Plans 24

6.2 Heating, Ventilation and Air Conditioning (HVAC) 24
6.2.1 HVAC Requirements 24
6.2.2 HVAC Plans 24

6.3 Cables **24**
6.3.1 Cable Routing/Raised Floor Requirements 24
6.3.2 Cable Plans 24

6.4 Power **24**
6.4.1 Power Requirements 24
6.4.2 Power Plans 24

6.5 Physical Safety and Security **24**
6.5.1 Security and Safety Requirements 24
6.5.2 Security and Safety Plans and Procedures 24

6.6 Environmental/HAZMAT **25**
6.6.1 Environmental Monitoring Requirements 25
6.6.2 Environmental Monitoring Plans and Procedures 25

6.7 Grounding, Bonding, Shielding & Lightning Protection **25**
6.7.1 Grounding, Bonding, Shielding & Lightning Protection Requirements 25
6.7.2 Grounding, Bonding, Shielding & Lightning Protection Plans 25

6.8 Space **25**
6.8.1 Space Requirements 25
6.8.2 Space Allocation Plans 25

6.9 Construction & Modification **25**

6.10 Telecommunications **25**
6.10.1 Telecommunications Requirements 25
6.10.2 Telecommunications Plans and Procedures 26

6.11-6.19 (Reserved) **26**

6.20 Status Assessment **26**

7.0 FINANCIAL RESOURCES **27**

7.1 Summary of Funding Plan **27**

7.2 Facilities and Equipment (F&E) Budget **27**
7.2.1 F&E Budget Requirements 27
7.2.2 Summary of F&E Funding Status 27

7.3 Operations and Maintenance (O&M) Budget **27**
7.3.1 O&M Budget Requirements 27
7.3.2 Summary of O&M Funding Status 27

7.4 Research, Engineering and Development (RE&D) Budget **27**
7.4.1 RE&D Budget Requirements 27
7.4.2 Summary of RE&D Funding Status 28

7.5- 7.19 (Reserved) **28**

7.20 Status Assessment **28**

8.0 HUMAN RESOURCES 29

8.1 Human Resources Management 29
8.1.1 Impacts of Acquisition on Human Resource Management 29
8.1.2 Human Resource Implementation Strategies 29
8.1.3 Security Clearances 29

8.2 Staffing 29
8.2.1 Impacts of Acquisition on Staffing 29
8.2.1.1 Operational Workload 29
8.2.1.1.1- 8.2.1.1.n (as necessary: one for each affected work force) 29
8.2.1.2 Implementation Workload 29
8.2.1.2.1- 8.2.1.2.n (as necessary: one for each affected work force) 30
8.2.2 Staffing Plans 30
8.2.3 Staffing Schedule 30

8.3 Training 30
8.3.1 Training Program 30
8.3.2 Training Support 30
8.3.3 Personnel Skills 30
8.3.4 Training Quotas 30
8.3.5 Training Schedule 30

8.4-8.19 (Reserved) 30

8.20 Status Assessment 31

9.0 TEST AND EVALUATION 32

9.1 Overview of Test Program 32
9.1.1 Government Test Program 32
9.1.1.1 Full Operational Assessment (FOA) 33
9.1.1.2 OT&E 33
9.1.1.2.1 OT&E Integration Testing 33
9.1.1.2.2 OT&E Operational Testing 34
9.1.1.2.3 OT&E Shakedown Testing 34
9.1.1.3 Field Shakedown 35
9.1.2 Contractor Test Program 35
9.1.2.1 DT&E 35
9.1.2.2 PAT&E 35

9.2 T&E Schedule 36

9.3 T&E Responsibility Matrix 36
9.3.1 Government Test Organization 36
9.3.1.1 Program Manager (PM), ARD-40 36
9.3.1.2 Associate Program Manager for Test (APMT), ACD-340 36
9.3.1.3 Associate Program Manager for Requirements (APMR), (ATR-330) 36
9.3.1.4 Associate Program Manager for Operations (APMO), (ATM-100) 37
9.3.1.5 Associate Program Manager for NAS Implementation (APMNI), (ANS-200) 37
9.3.1.6 Associate Program Manager for Logistics (APML), (ALM-500) 37
9.3.1.7 Office of Independent OT&E Oversight, (ATQ-3) 37
9.3.1.8 Operational Support Directorate (AOS) 37

9.3.1.9 Airway Facilities Regional Division 38
9.3.1.10 Engineering, Test and Evaluation Service (ACN-500) 38
9.3.1.11 Technical Analysis and Support Branch (AFS-450) 38
9.3.2 Contractor Test Organization 38

9.4 T&E Field Support Requirements 38
9.4.1 Personnel Requirements 38
9.4.2 Test Equipment Requirements 38
9.4.3 System Access 39
9.4.4 Space Requirements 39

9.5 T&E Program Status 39
9.5.1 Test Results Summary 39
9.5.2 Outstanding Program Trouble Reports (PTRs) 39
9.5.3 Discrepancy Correction Process 39

9.6-9.19 (Reserved) 39

9.20 Status Assessment 40

10.0 SYSTEM SUPPORT 41

10.1 System Support Concept 41
10.1.1 Hardware 41
10.1.2 Software 41

10.2 Special Support Facilities 41
10.2.1 Mike Monroney Aeronautical Center 41
10.2.1.1 Restoration Response Level 41
10.2.1.2 Field Level Maintenance 41
10.2.1.3 Depot Level Maintenance 41
10.2.1.4 Engineering Support 41
10.2.2 FAA Technical Center 41
10.2.2.1 Restoration Response Level 41
10.2.2.2 Field Level Maintenance 41
10.2.2.3 Depot Level Maintenance 42
10.2.2.4 Engineering Support 42
10.2.3 Other Special Support Facilities 42

10.3 Materiel Support 42
10.3.1 Project Materiel 42
10.3.2 Provisions and Supply Support 42
10.3.3 Packaging, Handling, Storage and Transportation 42

10.4 Technical Documentation 42
10.4.1 Hardware Documentation 42
10.4.2 Software Documentation 43
10.4.3 Procedural Documentation 43

10.5-10.19 (Reserved) 43

10.20 Status Assessment 43

11.0 PROGRAM SCHEDULE INFORMATION 44

11.1 NAS Implementation Schedule 44

11.2 Deployment Schedule 44

11.3 Site Implementation Schedule 44

11.4 Schedule Dependencies 44

11.5-11.19 (Reserved) 44

11.20 Status Assessment 44

12.0 ADMINISTRATION 45

12.1 Acquisition Program Summary 45
12.1.1 Market Survey 45
12.1.2 Acquisition Strategy 45

12.2 Contracting Information 45
12.2.1 Prime Contract 45
12.2.2 Service Contracts 45
12.2.3 Program Support Contracts 46
12.2.4 Regional Contracting 46
12.2.5 GFP/GFI/GFE Obligations 47

12.3 Program Management (PM) 47
12.3.1 PM Charter 47
12.3.2 Program Management Team (PMT) 47
12.3.3 Program Status Reporting 48
12.3.4 Exception Management 48

12.4 Quality Assurance 49
12.4.1 Program Acceptance Criteria 49
12.4.2 Risk Management 49

12.5 Configuration Management (CM) 49
12.5.1 CM Responsibilities 49
12.5.1.1 Pre-Production CM 49
12.5.1.2 Contract CM 50
12.5.2 Configuration Control Boards (CCB) 50
12.5.3 CM Milestones 51
12.5.4 Configuration Items (CI) 51

12.6-12.19 (Reserved) 51

12.20 Status Assessment 51

13.0 IMPLEMENTATION (REQUIREMENTS) 52

13.1 Implementation Support Organization 52

13.1.1 Associate Program Manager for NAS Implementation (APMNI) 52
13.1.2 Implementation Management Team (IMT) 52
13.1.3 Regional Associate Program Manager (RAPM) 53
13.1.4 Technical On-site Representatives (TOR) 53
13.1.5 Contract Support: 54

13.2 Site Implementation Process 54
13.2.1 Implementation Planning Phase 55
13.2.1.1 Implementation Activities 55
13.2.1.2 Requirements 55
13.2.2 Pre-Installation and Checkout (Pre-INCO) Phase 55
13.2.2.1 Implementation Activities 55
13.2.2.2 Requirements 55
13.2.3 Installation and Checkout (INCO) Phase 55
13.2.3.1 Implementation Activities 56
13.2.3.2 Requirements 56
13.2.4 System Integration Phase 56
13.2.4.1 Implementation Activities 56
13.2.4.2 Requirements 56
13.2.5 Field Shakedown Phase 56
13.2.5.1 Implementation Activities 56
13.2.5.2 Requirements 56
13.2.6 Dual Operations Phase 56
13.2.6.1 Implementation Activities 57
13.2.6.2 Requirements 57
13.2.7 Equipment Removal Phase 57
13.2.7.1 Implementation Activities 57
13.2.7.2 Requirements 57

13.3-13.19 (Reserved) 57

13.20 Status Assessment 57

APPENDIX A: GENERIC SITE IMPLEMENTATION PLAN (GSIP) 1

APPENDIX B: TRANSITION INFORMATION EXCHANGE (TIE) SUMMARY REPORT1

APPENDIX C: DEFINITION OF TERMS 1

APPENDIX D: ACRONYMS & ABBREVIATIONS 1

LIST OF FIGURES

Figure 2-1	CTAS Implementation Approach	Page 7
Figure 5-1	Equipment Room	Page 16
Figure 5-2	CTAS System Architecture	Page 17
Figure 5-3	TMA Rack 1	Page 18
Figure 5-4	TMA Rack 2	Page 19

LIST OF TABLES

Table 9-1	Phase 2 Testing	Page 36
Table 12-1	CTAS Program Management Team for the Development Phase	Page 47
Table 13-1	CTAS Implementation Management Team for the Development Phase	Page 52
Table 13-2	Regional Associate Program Managers for the Development Sites	Page 53
Table 13-3	Acquisition Phase-2: Existing Contracts	Page 54
Table 13-4	Acquisition Phase-3: Existing Contracts	Page 54

1.0 GENERAL

1.1 Purpose of Document

This is the initial Program Implementation Plan (PIP) for the Center-TRACON Automation System (CTAS). It is being developed during the Concept Exploration phase of the acquisition and will be updated before each key decision point (KDP). Because CTAS is currently in research and development, there are many areas in this document requiring implementation information which is not available at this time. Additional implementation information will be added with each update of the PIP.

The PIP is used as a fundamental tool to (1) define how the Center-TRACON Automation System (CTAS) Project will be implemented in the Air Route Traffic Control Centers (ARTCCs) and Terminal Radar Approach Controls (TRACONs); (2) communicate implementation requirements to implementation sites and (3) provide the regions and field sites the opportunity to review, assess, and comment on proposed implementation requirements and identify and seek resolutions to issues/problems.

1.2 Scope of Document

The PIP is applicable to both ARTCCs and TRACONs with responsibility for implementing the CTAS Project. The PIP is a living document developed during Phase 1 (Concept Exploration) and is updated during each subsequent phase of the acquisition. The contents of the PIP are organized by the eleven essential elements of information as defined in FAA Order 1810.1F and documents the strategy, requirements, activities, and responsibilities necessary to support deployment and operation of CTAS in the field. The PIP has two attachments which will be developed and included with future updates, as information becomes available - the Generic Site Implementation Plan (GSIP) and the Transition/Implementation Information Exchange (TIE) Summary Report. The GSIP will be a generic site configuration task list using technical information from the PIP and will define activities and resource requirements to be accomplished during each of the seven phases of implementation described in Chapter 13 of this PIP. The TIE Report will list transition and implementation issues and will summarize the action plans and resolution of each.

1.3 Distribution

This document is distributed to the division level offices of the Associate Administrators for Air Traffic (AAT) and Airway Facilities (AAF); to the division level of the Office of Aviation System Standards (AVN), Flight Standards Service (AFS), Research and Development Service (ARD); to the branch level offices at the FAA Academy (AMA), FAA Logistics Center (AML), and FAA Technical Center (ATC); to the Regional Associate Program Managers (RAPMs); to the regional Airway Facilities, Logistics, and Air Traffic Divisions and to the branch level offices within these divisions; to the Airway Facilities sector offices and AT facilities; to the Program Director for Automation (ANA); to the branch level offices of the members of the CTAS Program Management Team to include each Associate Program Manager.

1.4 Definition of Terms

Refer to Appendix C for the definition of terms used in this PIP and Appendix D for a list of acronyms.

1.5 Cancellation

This PIP does not cancel or supersede any other PIP or program documentation.

1.6 Authority to Change

Changes, updates, and revisions to the PIP will be made by the CTAS Associate Program Manager for NAS Implementation (APMNI), with the approval and concurrence of the Program Manager for Terminal Air Traffic Control Automation (TATCA), ARD-40, and the Manager, Implementation Management Division, ANS-200.

1.7 Reference Documents

The documents referenced in this PIP are:

1. TATCA Mission Needs Statement (MNS) dated February, 1994
2. CTAS Operational Requirements Document (ORD) (draft) dated June 10, 1994
3. CTAS System/Segment Design Document (S/SDD) dated July 15, 1994
4. Integrated Logistics Support Plan (ILSP) dated July, 1994
5. Test and Evaluation Master Plan (TEMP) dated July 29, 1993
6. Development Test and Evaluation (DT&E) Plan (draft) June 7, 1994
7. Operational Test and Evaluation (OT&E) Plan (draft) dated June, 1994
8. Acquisition Plan Summary (draft) dated June 3, 1994
9. Implementation Process Guidelines dated June 1994
10. CTAS Technical Review and Configuration Management Plan dated March 10, 1994
11. CTAS Functional Specifications Working Draft dated August 5, 1994
12. FAA Order 4650.30, Management and Control of NAS F&E Projects/Materiel dated May 4, 1993
13. CTAS Risk Management Plan (draft) dated June 14, 1994
14. CTAS Risk Management Plan - Risk Summary and Status dated September 7, 1994
15. Acquisition - 1 Phase Summary for CTAS dated September 16, 1994

1.8-1.19 (Reserved)

1.20 Risk Assessment Overview

Risk assessment pertaining to the various aspects of the CTAS Program is addressed at the end of each section of this implementation plan in "Status Assessment." The APMNI will ensure actual and potential risks are identified in these sections as early as possible. CTAS implementation impacts and issues identified in these sections will be tracked via the Transition Information Exchange (TIE) process, and status will be discussed during the Implementation Management Team (IMT) meetings. A TIE Summary Report outlining all issues and risks will be maintained and attached as Appendix B to subsequent issues of the PIP.

2.0 PROGRAM OVERVIEW

2.1 Synopsis of Mission Need

The ability of the National Airspace System (NAS) to accommodate the needs of the aviation community of users is limited today by the number and availability of runways used for arrivals and departures. The system is further constrained by the ability of the air traffic control system to use those runways effectively and the number of aircraft which can be safely accommodated in the terminal airspace surrounding the major airports. When the demand for arrivals at a given airport exceeds that airport's expected capacity, the results are airborne delays for arrivals and ground delays for departures. Inefficiencies in the process of descending, sequencing, merging, and spacing aircraft for landing result in wasted fuel, loss of runway capacity, and under-utilization of the airport. The ensuing air traffic delays increase aircraft operating costs, increase controller workload, and inconvenience passengers. Current forecasts continue to project serious delays in the absence of capacity improvements. According to recent analyses, the number of airports which could exceed 20,000 hours of annual aircraft delay is projected to grow from 23 airports in 1991 to 36 airports by the year 2001. While these analyses indicate that 66% of these delays are attributed to adverse weather, 27% are the result of demand exceeding capacity in the terminal area. With airline direct operating costs (excluding value of passenger time) averaging $1,600 per hour, each of the 23 airports incurred a minimum of $32 million of delays in 1991. The annual delays for the 36 airports in 2001 could total $1.1 billion. Automation initiatives currently planned for implementation do not sufficiently address present-day needs for increased airport capacity and more efficient air traffic management in the terminal area. Capacity-increasing automation initiatives, such as automated en route air traffic control (AERA), are designed for future use in en route airspace. Other terminal automation initiatives are safety related and do not address increasing capacity needs. Automation initiatives are needed to assist controllers in managing these inefficiencies; thereby reducing delays, increasing controller productivity, and reducing fuel consumption. (reference: TATCA Mission Needs Statement (MNS) dated 2/94, pages 1 & 2)

2.1.1 Operational Needs

2.1.1.1 CTAS Automation Capabilities

1. CTAS shall process real-time radar and flight plan data from aircraft within or transitioning into the en route and/or terminal airspace boundaries. CTAS shall process all new positional data or amended flight plan data and display the revised sequence and/or advisories based on facility adapted filtering constraints.

2. CTAS shall generate a schedule of traffic at arrival meter fixes and runway threshold(s) for the runway configuration in use, applying appropriate radar separation minima, with an efficient sequence adjusted for multiple wake vortex minima.

3. CTAS shall provide assistance to the TMC in monitoring and affecting aircraft being scheduled to a gate or runway, by permitting the TMC to: change runway configurations and airport acceptance rates at optimum times; to block time intervals for configuration changes or temporary runway closure; to designate an aircraft for priority (undelayed) scheduling; and to reserve time slots for anticipated arrivals or departures.

4. CTAS shall display fix crossing/runway threshold times and amount of delay to be absorbed on the appropriate en route arrival sector(s).

5. CTAS shall provide speed, top-of-descent, and vector advisories to en route controllers which enable them to meet CTAS generated fix crossing times with a fuel-efficient descent profile (DPF).

6. CTAS shall provide path-stretching advisories to assist in absorbing delays in excess of what can be absorbed through descent and speed reduction.

7. CTAS shall provide runway assignments and sequence numbers to assist TRACON controllers in routing and sequencing aircraft in the terminal area.

2.4 Program Milestones

Due to sensitivity and as recommended by the Contracting Officer, the CTAS Program Schedule and Milestone Charts will not be available until after release of the Request For Procurement.

2.5 Inter-Agency Involvement

2.5.1 Department of Defense (DOD)

TBS by ARD-40 prior to KDP-3.

2.5.2 National Weather Service (NWS)

The CTAS system shall be capable of receiving the following NWS meteorological CONUS grid data:

1. grid point
2. wind speed
3. wind direction
4. temperature
5. barometric pressure

The CTAS system shall receive CONUS grid weather data every three (3) hours (a more frequent requirement may be required).

(reference: CTAS Functional Specification dated 8/5/94, page 54)

2.5.3 U.S. Customs Service

N/A

2.5.4 Drug Enforcement Agency (DEA)

N/A

2.5.5 Other Agencies

TBS by ARD-40 prior to KDP-3 for Planning and Passive Advisors.

2.6-2.19 (Reserved)

2.20 Risk Assessment

There is some uncertainty in meeting the established CTAS implementation schedule. The technical complexity and breadth of this program require sufficient time to enable a national implementation. To mitigate the schedule risk and to provide the earliest possible benefits, the strategy to provide incremental products was adopted. The early limited operational assessment by NASA Ames at the field development sites allows for deployment of incremental advisors that are responsive to the user's needs and requirements. Also, conducting risk mitigation activities such as the early development of manual site adaptation procedures will help to ensure that the program schedules will be met. These risk mitigation activities will be augmented with the acquisition strategy of utilizing existing agreements with Government organizations and existing contracts with industry to perform many of the research and development activities.

(reference: Draft CTAS Risk Management Plan dated June 14, 1994, pages 2 and 3)

3.0 AIRWAY FACILITIES OPERATIONS

3.1 Summary of Maintenance Operations Impacts

3.1.1 Transitory State

CTAS will be installed, checked-out, and initially supported by the contractor, who will provide full contractor maintenance and logistics support (CMLS) services for a minimum of one year following installation at each deployment site. AF personnel will be trained/familiarized in system failure recognition and CMLS contractor trouble notification. (reference: Integrated Logistics Support Plan (ILSP) 94-500-002 dated July, 1994)

3.1.2 Operational State

While CMLS services are available, AF personnel will provide interface between AT users and the CMLS contractor. When transitioned to FAA organic site support, AF personnel will perform preventive maintenance, failure diagnosis, and LRU replacement. Both Host and ARTS technical specialists will be trained. (reference: ILSP 94-500-002 dated July, 1994)

3.2 AF Procedural Changes

3.2.1 Preventive Maintenance

CTAS shall require basic preventive maintenance not more than one 3-hour period per quarter. (NAS-SS-1000 & CTASPO-SLS-001)

3.2.2 Corrective Maintenance

AF corrective maintenance shall not be required during the CMLS phase. After transition to FAA organic support, AF personnel will be required to perform CTAS fault analysis and line replaceable unit (LRU) replacement. (reference: ILSP 94-500-002 dated July, 1994) Mean time between failure is 2190 hours; mean time to restore is 30 minutes (after a 2-hour contractor response time). (reference: ILSP 94-500-002 dated July, 1994)

3.2.3 Software Maintenance

The software contains designed-in self-diagnostic features. Software maintenance will be performed by the contractor under CMLS and the AT Automation Specialists (AUS) after transition to organic support. (reference: ILSP 94-500-002 dated July, 1994)

3.2.4 System Operations/Monitoring

The system will be monitored by AT user personnel in the Traffic Management Unit (TMU). AF personnel will be notified by internal telecommunications upon apparent system failure. (reference: ILSP 94-500-002 dated July, 1994)

3.2.5 System Certification

Procedures to support system certification will be developed by AOS-300 for ARTCCs and AOS-400 for TRACONs during the Full Scale Development phase of the program. (reference: ILSP 94-500-002 dated July, 1994)

3.2.6 Personnel Certification

Specific requirements will be defined during the Full Scale Development phase in preparation for Operational Test and Evaluation (OT&E). (reference: ILSP 94-500-002 dated July, 1994)

3.2.7-n (others as needed)

3.3 Facilities and Equipment

The roles and schedule for F&E personnel involvement in the program implementation will be determined as development and testing progresses. Experience gained at development sites will be used as the basis for providing this information in subsequent issues of the PIP. The contractor will procure, install, test, and maintain CTAS at each deployment site for a minimum of 1 year following deployment and will be tasked to provide a Transition Plan. (reference: ILSP 94-500-002 dated July, 1994)

3.4 Systems Maintenance

The contractor will install and provide CMLS for a minimum of one year following installation. AF training will reflect a "train the cadre" approach in anticipation of the transfer of responsibility for organic support. (reference: ILSP 94-500-002 dated July, 1994)

3.5-3.19 (Reserved)

3.20 Status Assessment

The only known issue at this time that could affect AF operations is the schedule for deployment of CTAS. The deployment schedule for the various ARTCCs and TRACONs has not been finalized or released by AT; therefore, specific deployment sites cannot perform their planning process.

4.0 AIR TRAFFIC OPERATIONS

4.1 Summary of AT Operational Impacts

CTAS is designed to provide automation assistance to the TMCs and air traffic controllers at ARTCCs and TRACONs. CTAS information and advisories are displayed in the traffic management units (TMUs) and on en route Plan View Displays (PVDs) and TRACON Full Digital ARTS Displays (FDADs).

4.1.1 Transitory State

The impact will primarily be in training personnel to use the various automation tools, both for the TMCs and air traffic controllers. Two or more work station displays will be added in the traffic management unit. No adverse impact is anticipated on operations, either from the user or provider perspective. The ATM and APMNI will work with Headquarters and Regional AT on these issues to identify and resolve potential impact. Any potential AT operational risks or impact will be identified in the testing at the two development sites.

4.1.2 Operational State

The TMCs at ARTCCs and TRACONs will use CTAS to plan and control the sequence and timing of arriving and departing aircraft. The air traffic controllers will have automated aids provided by CTAS to assist them in reducing aircraft delays, achieving fuel efficient descents and climbs, and providing optimal sequencing and spacing on final approach, thereby increasing airport capacity. A schedule and sequence of arrival traffic will be provided to TMCs and advisories provided to controllers to enable them to implement the schedule with precision.

The en route and terminal TMUs will receive estimated and scheduled arrival times in a graphical format through CTAS. It will provide en route controllers with meter fix crossing times, top of descent point, cruise speed, and vector advisories to assist in their decision making. Additionally, TRACON controllers will be provided runway assignment, sequence number, speed and vector advisories to assist them. The air traffic controllers will use the CTAS tools to aid them in optimizing the capacity of their respective environments, largely based on the scheduled arrival times and flow patterns established by the TMU personnel utilizing CTAS. The TMCs will provide traffic inputs as required, based on schedule changes, weather, and other factors affecting capacity.

4.2 AT Procedural Changes

4.2.1 ATC Operational and Management Procedures

TBS by ATM and ATP prior to KDP-3 for Planning and Passive Advisors.

4.2.2 Flight Procedures/Standards

Not Applicable.

4.2.3 Administrative and Management Procedures

TBS by ATM and ATP prior to KDP-3 for Planning and Passive Advisors. Some traffic delay statistics and analyses will be automatically generated, reducing the need for manual compilation of data.

4.2.4 Software Verification Procedures

TBS by AOS prior to KDP-3 for Planning and Passive Advisors.

4.2.5 Inter-facility Procedures

Identical displays of aircraft data on ARTCC and TRACON displays will reduce manual coordination required between TMUs. The System Design Team (SDT), composed of controllers, traffic managers, and representatives from headquarters AT services, are currently working with ARD-40 to develop AT procedures. However, this process is still evolving; it is expected that new procedures will become apparent during Full Operational Assessment (FOA) of CTAS.

4.2.6 Personnel Certification Procedures

To be developed by ATR prior to KDP-3 for Planning and Passive Advisors.

4.2.7 System Back-up/Cutover Procedures

CTAS contains redundant LAN and extra hardware and software backup. Cutover is accomplished by cold restart. Specific procedures should be established during FOA.

4.3 AT Implementation Responsibilities

The SDT provides guidance and direction in the design and development of software functions. During prototyping, operational feedback and suggestions are provided by operational personnel at field development sites. The cadre training concept will utilize controllers and TMCs to assist in training this work force.

4.4-4.19 (Reserved)

4.20 Status Assessment

There is some risk with introducing too much additional information on the controllers' and/or TMCs' displays at one time. Therefore, CTAS information will be introduced in incremental phases. For example, data blocks on TRACON displays initially will contain a third line showing runway assignment and sequence number with speed and heading information being added in a later block upgrade. This incremental approach will be used both during the research and development as well as the operational deployment phases.

The advantages of the incremental approach are:

1. Training facilitation.

2. Controller acceptance and ease of operational procedures modification and transition.

3. The ability to modify CTAS capabilities, as needed adjustments to the operational capabilities are identified.

4. Ability to use CTAS features when they are available versus delaying the system deployment pending development of all subsystems.

The disadvantages of an incremental/phased approach include:

1. Higher costs for the additional training, multiple deployments/installations, and National Airspace Integrated Logistics Support (NAILS).

2. Delayed use of CTAS functions and realization of the associated operational benefits that have been developed but not deployed.

3. Due to phased development, some problems may be identified at a later than "normal" time.

(reference: Information in Section 4, AT Operations, was provided by ATR-334)

5.0 SYSTEM CONFIGURATION AND ENGINEERING

5.1 NAS Level Architecture

5.1.1 NAS Target State

This paragraph identifies modifications needed to current and future ATC automation systems to support the CTAS system. CTAS has not been baselined yet; the system level specifications must be finalized first which will occur before release of the RFP. There have been several test NCPs to establish the capabilities required at the development sites. Some NCPs will be required at future CTAS deployment sites, once these sites have been identified.

(reference: information provided by ARD-40, 10/94)

5.1.1.1 Host Software Modifications

The CTAS interface with the Host is planned to be implemented in the near term using the Peripheral Adapter Module Replacement Item (PAMRI) Emulator (PE). Messages are transmitted and formatted between the Host and CTAS by the PE. The PE is a software emulation of the PAMRI supported on IBM RISC System/6000. The PE runs the AIX version 3.2 software. The PE interfaces with CTAS workstations by an Ethernet LAN using an Ethernet adapter card. The PE interfaces with the Host by byte multiplexer microchannel bus using two byte multiplexer microchannel adapters. The IBM 370 channel interface is also used in the interface of the PE and the Host.

5.1.1.2 ISSS Software Modifications

TBS by ARD-40 prior to KDP-3 for Planning and Passive Advisors.

5.1.1.3 FDAD Software Modifications

TBS by ARD-40 prior to KDP-3 for Planning and Passive Advisors.

5.1.1.4 ARTS IIIA Common Interface Modifications

ARTS IIIA/CTAS Development Interface: At the Dallas-Forth Worth (DFW) TRACON, the ARTS IIIA interfaces with the CTAS development system. CTAS interfaces with the ARTS IIIA Input/Output Processors Model B (IOPBs)and FDADs through the TATCA Interface Unit (TIU). The DFW ARTS software has been modified to support an IOPB channel interface to the TIU. The IOPB-TIU interface provides ARTS data to CTAS. The DFW ARTS FDAD firmware is scheduled to be modified to enable the display of CTAS FAST advisories on the FDADs. This CTAS/ARTS interface is for development purposes only.

ARTS IIIA Common Interface: A common interface enhancement is planned for TRACONs equipped with ARTS IIIA. However, it is anticipated that all CTAS deployment sites will transition to ARTS IIIE Common Interface systems prior to CTAS deployment. Therefore, the ARTS IIIA Common Interface is not expected to be needed for CTAS deployment.

(reference: ARD-40 CTAS and Terminal Automation Systems Integration Overview Briefing, 9/6/94))

5.1.1.5 ARTS IIIE Modifications

ARTS IIIE Common Interface: The CTAS interface with ARTS IIIE is planned to be implemented using the ARTS IIIE Common Interface Gateway. The gateway will also provide other NAS systems, such as Final Monitoring Aid and Traffic Management System, with a common interface to the ARTS IIIE Ethernet Local Area Network (LAN). The CTAS FAST processors will interface to the gateway to receive ARTS IIIE data and to send FAST advisories for display on FDADs. (reference: ARD-40 CTAS and Terminal Automation Systems Integration Overview Briefing, 9/6/94)

5.1.2 Inter-Program interface

CTAS requires an interface to the following NAS programs: Adjacent ARTCCs and TRACONs, the Host Computer System (within an ARTCC), the ARTS III computers (in the TRACON), Automated En-Route ATC (AERA), Enhanced Traffic Management System (ETMS), FAA Telecommunications Satellite (FAATSAT), and Standard Terminal Automation Radar System (STARS).

5.1.2.1 Interfaces to Adjacent ARTCCs and TRACONs

The CTAS Planning and Passive Advisors in the ARTCCs exchange information for scheduling traffic flow between centers. The specific message types, formats, and medium of exchange are TBS by ASE-100 prior to KDP-3 for Planning and Passive Advisors. If the adjacent ARTCC uses ASP instead of the Planning and Passive Advisors, ASP data can be substituted.

TRACON traffic is TBS by ASE 100 prior to KDP-3 for Planning and Passive Advisors.

5.1.2.2 Interfaces to Host (ARTCC) and ARTS III (TRACON) Computers

Host Interface:

The PE software, AIX version 3.2, controls the interprocess communication between CTAS and the Host. The software also controls the 370 channel interface as well as maintenance and diagnostic of the PAMRI Emulator.

See paragraph 5.1.1.1 above.

ARTS III Interfaces:

See paragraph 5.1.1.4 and .5 above.

5.1.2.3 Interfaces to AERA

Specific message types, formats, and medium of exchange are TBS by ASE 100 prior to KDP-3 for Planning and Passive Advisors..

5.1.2.4 Interfaces to ETMS

Specific message types, formats, and medium of exchange are TBS by ASE 100 prior to KDP-3 for Planning and Passive Advisors.

5.1.2.5 Interfaces to FAATSAT

An interface to FAATSAT receivers is required for the receipt of weather data. Specific message types, formats, and medium of exchange are TBS by ASE 100 prior to KDP-3 for Planning and Passive Advisors.

5.2 Platform Architecture

CTAS will be deployed in en route and terminal platforms.

5.2.1 Interim Platform Configuration

TBS by ANS when platform configuration is determined.

5.2.2 Target State Configuration

TBS by ANS when platform configuration is determined.

5.3 Subsystem Level Architecture

See Figures 5-1 and 5-2.

5.3.1 Hardware

CTAS hardware consists of six Hardware Configuration Items (HWCIs): CTAS Processing Equipment (CPE), TIU, Traffic Management Station (TMS), System Management Station (SMS), ARTS Data Unit, and the PAMRI Emulator HWCI. These are described in the following paragraphs. The planned rack configuration for the ARTCCs is illustrated in Figures 5-3 and 5-4. The planned TRACON rack configuration is not available at this time but will be included in the next update to the PIP. (reference: S/SDD dated July 15, 1994)

5.3.1.1 CTAS Processing Equipment (CPE) HWCI-1

This HWCI will provide the processing power and displays to support all CTAS functions except for the interface to the primary ATC automation system at a facility and certain CTAS functions supported within the primary automation system itself. The CTAS functions within the primary automation system obtain data needed by CTAS, accept CTAS-specific keyboard inputs from sector controllers, and send all this information to the CTAS interface. They also receive CTAS display information from the interface and generate CTAS displays for sector controllers. The CPE HWCI is made up of the following COTS components:

1. Dual Local Area Networks (LANs)
2. Processor Array
3. Operational Workstations
4. Training, Support, and spare Workstations
5. Data Recording Equipment
6. Coded Time Source (TBS by ASE 100 prior to KDP-3 for Planning and Passive Advisors)
7. Printer
8. Wide Area Network (WAN) interface

(reference: S/SDD dated July 15, 1994, page 20)

5.3.1.2 Traffic Management Station (TMS) HWCI-2

The TMS is the CTAS monitoring and data entry equipment used by the TMC in the TMU area. One or more display monitors and entry components (keyboards, mouse devices) are provided within the TMS at both operational and training positions. The display monitor is a 19 inch diagonal measure or larger full-color monitor with a resolution of at least 72 pixels per inch (with the same resolution in both the horizontal and vertical directions) and provides at least 256 colors. (reference: S/SDD dated July 15, 1994, page 23)

5.3.1.3 System Management Station (SMS) HWCI-3

The SMS is the CTAS monitoring and data entry equipment for tracking and controlling CTAS status. This HWCI will reside in the System Maintenance Monitoring Console (SMMC) area. A display monitor and entry components (keyboards, mouse devices) are provided within the SMS. The display monitor is a 19 inch diagonal measure or larger full-color monitor with a resolution of at least 72 pixels per inch (with the same resolution in both the horizontal and vertical directions) and provides at least 256 colors. (reference: S/SDD dated July 15, 1994, page 23)

5.3.1.4 TATCA Interface Unit (TIU) HWCI-4

The TIU HWCI provides the CTAS interface with ARTS IIIA and ARTS IIIE systems, and is adapted to whichever of these systems is in use at each TRACON facility where CTAS is installed. Two TIUs will be provided for redundancy, one for each CTAS LAN. (reference: S/SDD dated July 15, 1994, page 23)

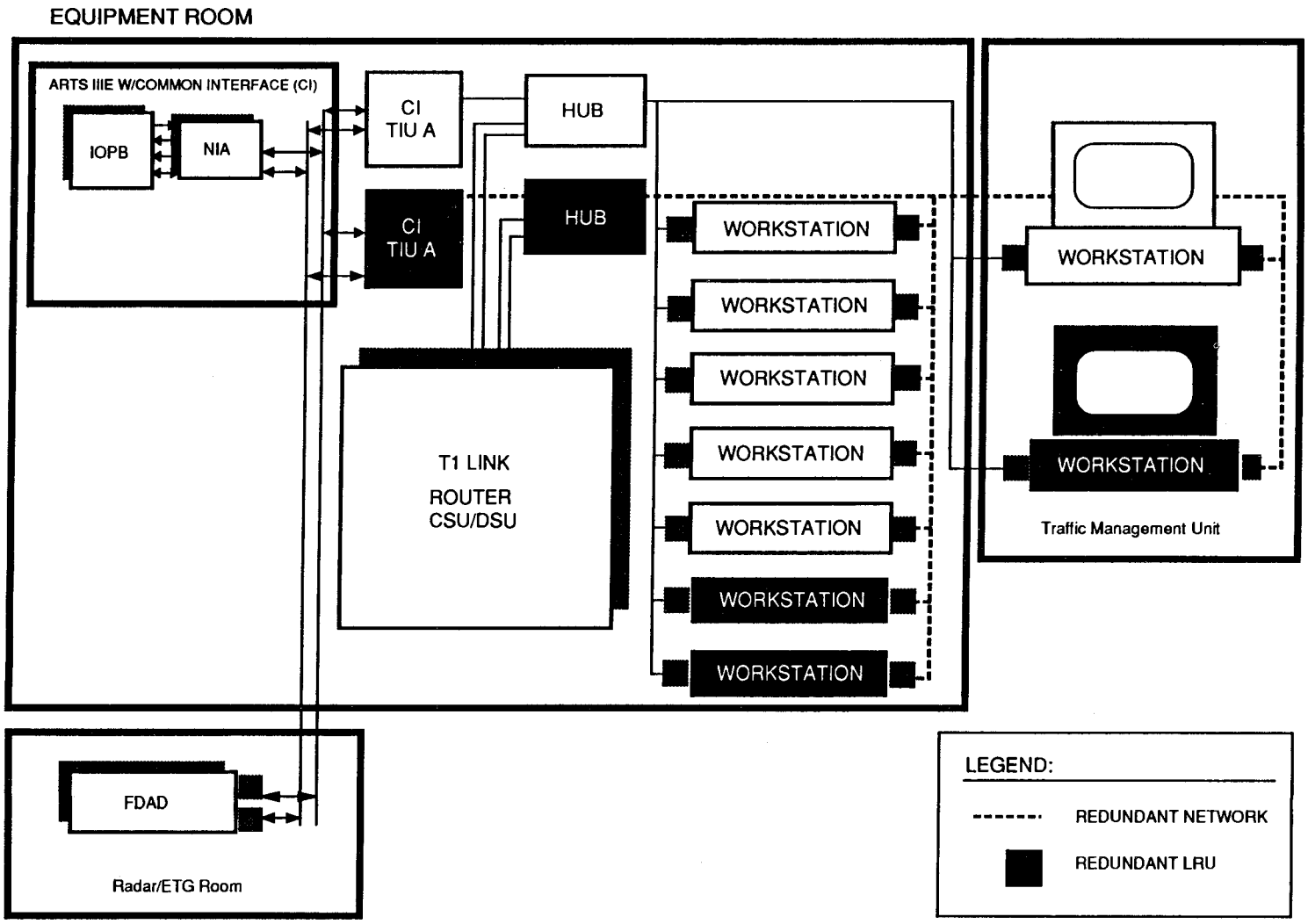

Figure 5-1 Equipment Room

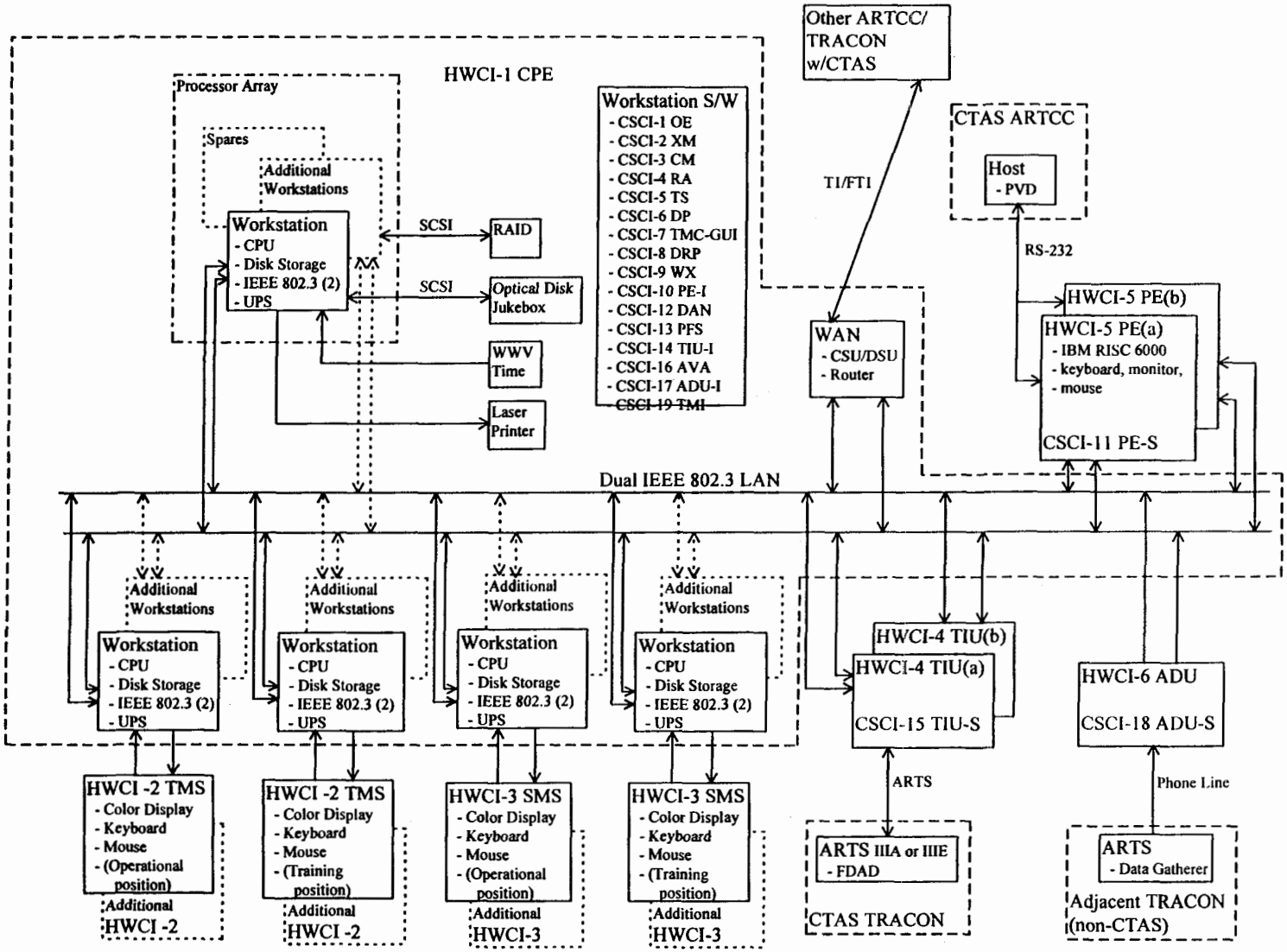

Figure 5-2 CTAS System Architecture

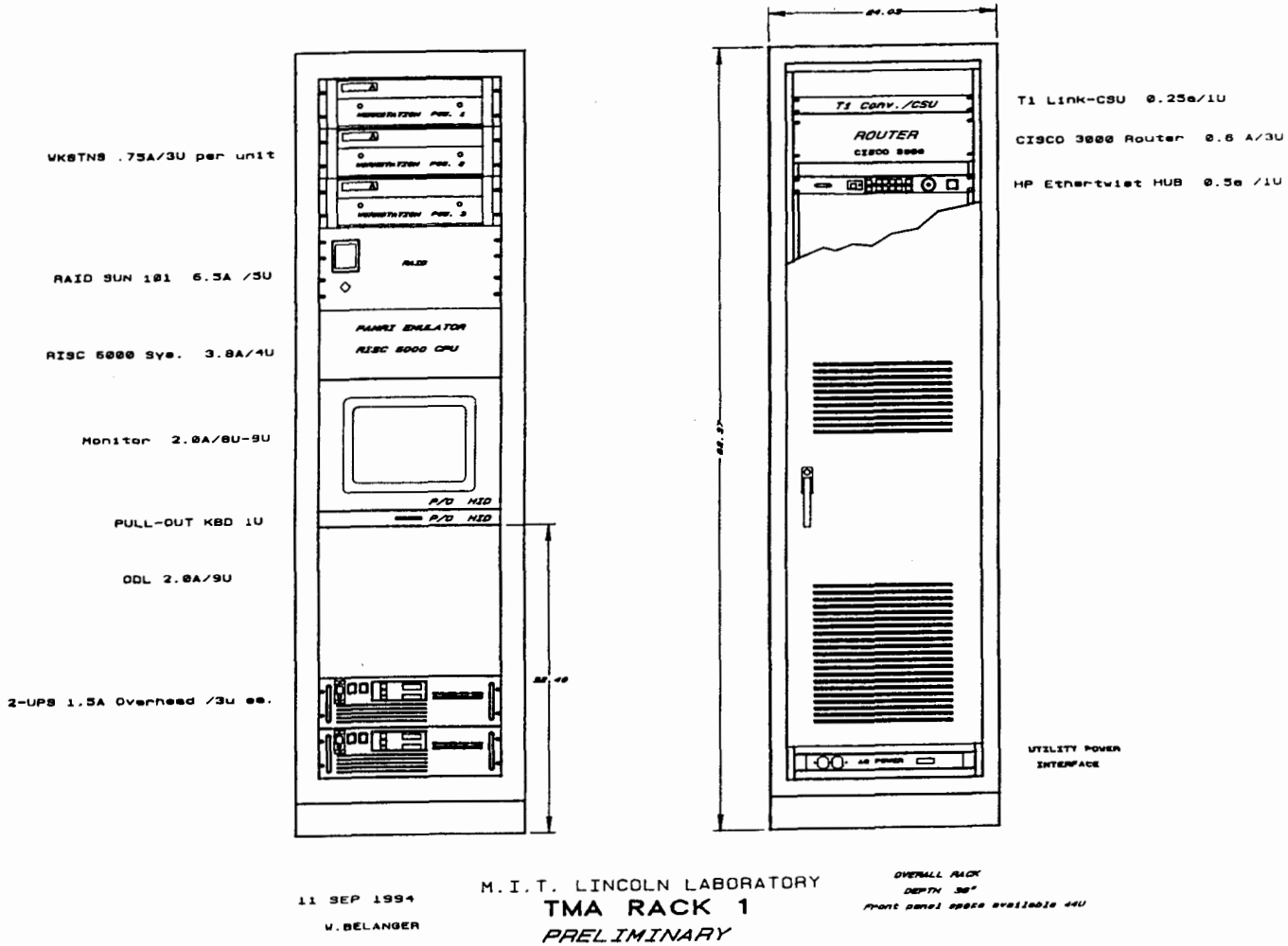
WKSTNS .75A/3U per unit
RAID SUN 101 6.5A /5U
RISC 6000 Sys. 3.8A/4U
Monitor 2.0A/8U-9U
PULL-OUT KBD 1U
ODL 2.0A/9U
2-UPS 1.5A Overhead /3u ea.
PANRI EMULATOR
RISC 6000 CPU
P/O HID
P/O HID
T1 Conv./CSU
ROUTER
CISCO 3000
T1 Link-CSU 0.25a/1U
CISCO 3000 Router 0.6 A/3U
HP Ethertwist HUB 0.5a /1U
UTILITY POWER
INTERFACE
11 SEP 1994
W.BELANGER
M.I.T. LINCOLN LABORATORY
TMA RACK 1
PRELIMINARY
OVERALL RACK
DEPTH 36"
Front panel space available 44U

Figure 5-3

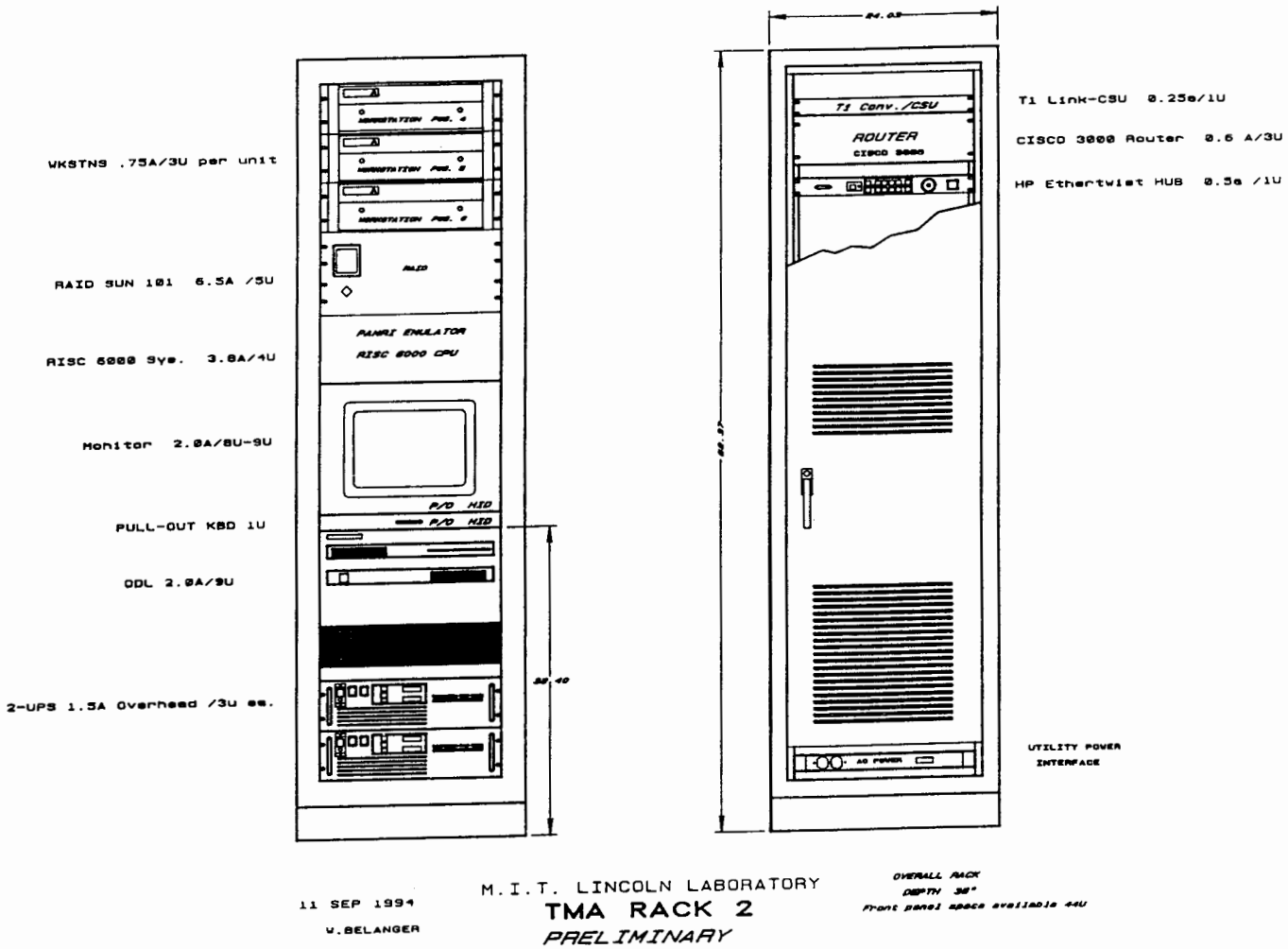
WKSTNS .75A/3U per unit
RAID SUN 101 6.5A /5U
RISC 6000 Sys. 3.0A/4U
Monitor 2.0A/8U-9U
PULL-OUT KBD 1U
ODL 2.0A/9U
2-UPS 1.5A Overhead /3U ea.
RAID
PANRI EMULATOR
RISC 6000 CPU
P/O HID
P/O HID
38.40
T1 Conv./CSU
ROUTER
CISCO 3000
AC POWER
T1 Link-CSU 0.25a/1U
CISCO 3000 Router 0.6 A/3U
HP Ethertwist HUB 0.5a /1U
UTILITY POWER
INTERFACE
11 SEP 1994
W.BELANGER
M.I.T. LINCOLN LABORATORY
TMA RACK 2
PRELIMINARY
OVERALL RACK
DEPTH 38"
Front panel space available 44U

Figure 5-4

5.3.1.5 PAMRI Emulator (PE) HWCI-5

The PE is the CTAS interface to both of the redundant Host Computer Systems (HCS) in an ARTCC. The PE interface to the HCS is via two byte mux channels (TBS by ASE-100 prior to KDP-3 for Planning and Passive Advisors). The PE communicates to CTAS via one of two dual CTAS LANs. Two PEs will be provided for redundancy, one for each CTAS LAN. (reference: S/SDD dated July 15, 1994, page 24)

5.3.1.6 ARTS Data Unit (ADU) HWCI-6

The ADU provides data to CTAS from TRACONs not equipped with FAST. The ADU is based on the ARTS Data Gatherer prototype, which uses a passive tap located on the interface between the ASR-9 Surveillance Communications Interface Processor (SCIP) and ARTS IOPB to obtain track reports. The ADU uses a modem interface to obtain flight plan information. (reference: S/SDD dated July 15, 1994, page 24)

5.3.2 Software

The CTAS software is written in an industry standard higher-order language, American National Standards Institute "C," and composed of the CSCIs listed in the following paragraphs. The relationship of CSCIs and HWCIs is depicted in Figure 5-2.

5.3.2.1 Operating Environment (OE) CSCI-1

The OE CSCI provides an interface between the CPE HWCI and the CSCIs in higher layers that execute on that equipment. It consists of several non-developmental COTS components and public domain components. (reference: S/SDD dated July 15, 1994, page 24)

5.3.2.2 Execution Manager (XM) CSCI-2

The XM CSCI provides centralized control of the LRUs of the CPE HWCI and the CSCIs in higher layers of an instance of CTAS. It provides the cohesive framework for the distribution of CSCI processing across multi-processor workstation platforms. It manages the startup and shutdown of the system and provides a focal point for fault reporting, reconfiguration, and recovery. It monitors external interfaces through interaction with the interface CSCIs: PE-I, TIU-I, ADU-I and Weather Interface (WX). It also provides an inter-process communication library and a general purpose library for the CSCIs in higher layers. (reference S/SDD, dated July 15, 1994, page 25)

5.3.2.3 Communications Manager (CM) CSCI-3

The CM CSCI provides centralized data management and distribution for CTAS. CM reads from a number of data files, processes these date, forms internal databases whose data it later makes available on an as-needed basis to other CSCIs. It also dynamically receives data messages, e.g., flight plan messages, track messages, and weather messages, from a number of CSCIs, processes them, and establishes and maintains internal databases which it later uses to service requests for data. (reference S/SDD, dated July 15, 1994, page 26)

5.3.2.4 Route Analysis (RA) CSCI-4

The RA CSCI generates sets of operationally feasible paths and associated estimated time of arrivals (ETAs) from an aircraft's current position to all possible runways. (reference S/SDD, dated July 15,1994, page 27)

5.3.2.5 Trajectory Synthesis (TS) CSCI-5

The TS CSCI simulates the flight of a specific aircraft along a route specified by the RA or PFS and in the process constructs a complete 4 dimensional trajectory (position in two horizontal coordinates and altitude as a function of time, the forth dimension). Calls from RA are triggered by the receipt of a flight plan or amendment and by the receipt of a new radar report. Calls from PFS are issued for every aircraft. (reference S/SDD, dated July 15, 1994, page 29)

5.3.2.6 Dynamic Planner (DP) CSCI-6

The DP generates schedules for arriving aircraft at selected airports. The generated schedules consist of a set of STAs for each specified vertex, usually a metering fix or a runway threshold. These STAs are based on the ETAs

calculated by the RA and TS CSCIs and the FAA specified minimum separation requirements between leading and trailing aircraft as a function of weight class. Unless a different ordering is requested from the TMC-GUI for specific pair(s) of aircraft, the STAs will be in the same order as and as close as possible to the ETAs in order to minimize the overall delay. This ordering is referred to as First Come First Serve sequencing. In the future other orderings ("optimal" schedules) that deviate from First Come First Serve may be introduced, with the aim of further reducing scheduling delays and increasing runway capacity. (reference: S/SDD, dated July 15, 1994, page 30)

5.3.2.7 Traffic Management Coordinator's Graphical User Interface (TMC-GUI) CSCI-7

The TMC-GUI CSCI provides an interactive user interface in both the Center and TRACON with which the TMC monitors and interacts with the Planning, Passive, and Direct Advisors. (reference S/SDD, dated July 15, 1994, page 31)

5.3.2.8 Data Recording and Playback (DRP) CSCI-8

The DRP CSCI provides:

1. a data recording capability for an operational CTAS, and
2. the ability to playback recorded data in the CTAS playback mode.

At initialization in the CTAS operational mode, XM sends the data recording function of DRP the list of messages to be recorded. During the operation, the data recording function receives the messages in the recording message from the sending CSCIs and records these messages in the order in which they are received. (reference S/SDD dated July 15, 1994, page 32)

5.3.2.9 Weather Interface (WX) CSCI-9

The WX CSCI provides the ability to continuously read weather data from a variety of weather sources, pre-process the raw data, and transfer weather update messages to the CSCIs requesting the updates. (reference S/SDD, dated July 15, 1994, page 33)

5.3.2.10 PAMRI Emulator Interface (PE-I) CSCI-10

The PE-I CSCI provides the interface between the CTAS CSCIs residing within the CPE HWCI and the PAMRI Emulator-Software (PE-S) CSCI, which resides in the PE HWCI. The PE HWCI connects CTAS to the Host computer of the en-route ATC automation system. (reference S/SDD, dated July 15, 1994, page 33)

5.3.2.11 PAMRI Emulator Software (PE-S) CSCI-11

The PE-S CSCI resides within the PE HWCI and performs protocol conversion and information interchange between CTAS and the Host at the Center. The PE has a bi-directional connection to the Host. Two PE units, each containing a PE-S CSCI, reside in the PE HWCI. These provide redundancy in case of failure. In normal operation, i. e. when both units are available, the second unit can service the training mode. (reference S/SDD, dated July 15, 1994, page 34)

5.3.2.12 Data Analysis (DAN) CSCI-12

The DAN CSCI is a set of off-line tools for retrieving, managing and analyzing the information recorded by the DRP CSCI. The DAN tools operate within the CPE HWCI, and interface with the processors and other equipment of the CPE HWCI through the OE CSCI. (reference S/SDD, dated July 15, 1994, page 35)

5.3.2.13 Profile Selector (PFS) CSCI-13

For DA, PFS is TBD. For FAST, PFS creates a plan for runway allocation and sequencing and creates advisories for sector controllers based on trajectories that meet the plan. For FAST, PFS receives inputs from the RA and CM CSCIs and outputs suggested runway, speed and turn advisories. (reference S/SDD, dated July 15, 1994, page 35)

5.3.2.14 TIU Interface (TIU-I) CSCI-14

The TIU-I CSCI provides an interface between the TIU-S and the CM CSCIs. The messages received from the ARTS by TIU-S are passed along without modification to the TIU-I. Entries made by sector controllers related to enabling or disabling FAST FDAD display features, relocating displays, or changing the format of these displays, are processed entirely within TIU-I. Controller entries that must be processed elsewhere within the CTAS software are reformatted and sent to CM for distribution. Messages relating to flight plans and flight position reports are also reformatted and sent to CM. (reference S/SDD, dated July 15, 1994, page 36)

5.3.2.15 TIU Software (TIU-S) CSCI-15

TIU-S controls the operation of the TIU HWCI, and comprises all the software within that HWCI. It provides the interface to the ARTS IIIA and ARTS IIIE systems. At any given TRACON facility it will be site-adapted to work with the type of system used at that facility. (reference S/SDD, dated July 15, 1994, page 36)

5.3.2.16 Adaptation, Validation, and Analysis (AVA) CSCI-16

The AVA CSCI provides a set of off-line tools for generating the site adaptation files needed by CTAS to adapt its functions to a facility's airspace and operational requirements. These site adaptation files are read by CM and stored in an internal database. Several CTAS CSCIs request these data from CM at the time they initialize. (reference S/SDD, dated July 15, 1994, page 38)

5.3.2.17 ARTS Data Unit Interface (ADU-I) CSCI-17

The ADU-I CSCI exchanges control and status messages with ADU-S. It passes data received by ADU-S from the ARTS in an adjacent TRACON to CM. (reference S/SDD, dated July 15, 1994, page 39)

5.3.2.18 ARTS Data Unit Software (ADU-S) CSCI-18

The ADU-S CSCI provides an interface between CTAS and an ARTS facility that is not receiving FAST advisory services, but from which CTAS needs to obtain flight position data. The primary use is at CTAS TRACON sites, to obtain information on tower en route traffic coming from an adjacent TRACON. It may not be feasible to use a TIU at the adjacent TRACON if it uses an ARTS IIIA, or it may be determined that installation of a TIU (and an ARTS CI at ARTS IIIA sites) is inappropriate due to cost or other reasons. The ADU is intended to provide an appropriate interface in such circumstances. (reference S/SDD, dated July 15, 1994, page 39)

5.3.2.19 Traffic Management Interface (TMI) CSCI-19

The TMI CSCI provides desired schedule times of arrival and airport configuration information to the National Traffic Management Systems and departure times to the Airport/Tower Traffic Management Systems. (reference S/SDD, dated July 15, 1994, page 39)

5.3.3 Physical Specification

To be determined prior to award of the contract; actual dimensions will be subject to contractor's selection of hardware. Limits and constraints will be available with release of the RFP.

5.4-5.19 (Reserved)

5.20 Status Assessment

The prototype development by NASA Ames of the initial CTAS advisors has shown that the process of adapting CTAS to the specific implementation site is rather complex. Not only must the geographical aspects of the site's airspace be adapted to, but air traffic control rules and procedures that are site-specific must be addressed. This risk is being mitigated by addressing, at an early stage in the development, the procedures to adapt each advisor. The first step is to develop manual procedures to enable the advisor to run efficiently at its intended site. This may include a module by module, incremental software adaptation process. Based on these manual procedures, new concepts will be developed that will provide automated assistance to performing the procedures required to adapt each of the CTAS advisors.

There is a risk that CTAS may not fully realize the benefits identified in the Cost-Benefit Analysis, since the CTAS advisors are currently still under research and development. This risk is being addressed by using a phased approach to implementation. During prototype development, the use of controller evaluation teams provides an early assessment of the benefits and extensive testing that will be performed at each step of the implementation process.

(reference: Draft CTAS Risk Management Plan dated June 14, 1994, page 2)

6.10.2 Telecommunications Plans and Procedures

For the deployment sites, the procurement, implementation, and maintenance of the T1 WAN capability will be transitioned to AOP. (reference: information provided by ARD-40, 9/94)

6.11-6.19 (Reserved)

6.20 Status Assessment

Currently, there are no identified physical facilities issues that would prevent contract award and subsequent equipment implementation; however, many unknowns will remain in this area until after award of the deployment contract.

7.0 FINANCIAL RESOURCES

7.1 Summary of Funding Plan

The next phase (demonstration/validation) of the plan for CTAS development uses a combination of Research, Engineering, and Development (RE&D) funds, as well as Facilities and Equipment (F&E) funds. In general, RE&D funds are used for CTAS software prototyping, site adaptation procedure development (along with common site adaptation software tools), system level/software specifications, and other related technical documentation. F&E funds are used for software re-engineering and code optimization, unique site adaptation of CTAS software, equipment needs for sites, and OT&E testing of CTAS software tools. Another major use of F&E funds will be the KDP-3 support and pre-acquisition activities associated with selecting and funding a prime contractor for national deployment of CTAS tools.

7.2 Facilities and Equipment (F&E) Budget

7.2.1 F&E Budget Requirements

The F&E budget plan for CTAS is based upon an FY'96 OST Submission preparation request (April 19, 1994).

The following general F&E cost categories are associated with the CTAS.

1. Hardware/software procurement
2. Site Installation
3. Training

7.2.2 Summary of F&E Funding Status

Reduced levels of authorizations from initial spending plans are anticipated for FY-96 and will result in program delays of facilities and equipment activities including deployment. Program delays will be proportional to the level of reduction.

7.3 Operations and Maintenance (O&M) Budget

7.3.1 O&M Budget Requirements

There are no O&M budget requirements during the Demonstration/Validation phase of the CTAS program. O&M budget requirements will be developed during the Full Scale Development phase and identified prior to KDP-4.

7.3.2 Summary of O&M Funding Status

Planning is underway for CTAS O&M budget.

7.4 Research, Engineering and Development (RE&D) Budget

7.4.1 RE&D Budget Requirements

The RE&D budget plan for CTAS is based upon the RE&D Five-Year Funding Plan - 1995 Budget Year (FY 1995 Congressional Submission).

The following general RE&D cost categories are associated with CTAS development:

1. Software prototyping
2. Field Development
3. Specification Development
4. Site Adaptation Procedures

8.2.1.2.1- 8.2.1.2.n (as necessary: one for each affected work force)

8.2.2 Staffing Plans

The strategies to be used to meet the operational staffing and implementation support workload will be determined during the Full Scale Development phase.

8.2.3 Staffing Schedule

The operational staffing and implementation staffing requirements will be determined during the Full Scale Development phase of the program.

8.3 Training

8.3.1 Training Program

CTAS training will be required, in varying degrees, for both AT and AF personnel. CTAS will introduce significant changes in Air Traffic Control (ATC) operational functionality and procedures.

AT training requirements have been determined in the course of prototyping and field development. AT training program will be designed by the FAA Academy in conjunction with NASA Ames Laboratory to train the site personnel in the management of the system, including startup procedures, monitoring of system status, recognition and interpretation of operational displayed data, shutdown procedures, and modification of CTAS adaptation data files when changes to adaptation data occur.

AF Training requirements will be determined during the Full Scale Development phase of the program. AF training for the prototype CTAS through FOA will be the responsibility of ARD-40. For the production version of the system, the contractor will design training materials for hardware and software maintenance to train contractor and AF site personnel in diagnosing software faults, hardware failures, and the removal and replacement of failed units. (reference: ILSP 94-500-002 dated July, 1994 & TEMP dated 7/29/93, 8.4.2, page 41)

8.3.2 Training Support

The training support resources to be used in implementing the training programs will be analyzed during the Demonstration and Validation phase of the program.

8.3.3 Personnel Skills

Knowledge, skills and abilities studies will be conducted to determine training requirements.

8.3.4 Training Quotas

The types, location, and duration of contractor and government training for all affected personnel, by position classification will be determined during the Full Scale Development phase of the program.

8.3.5 Training Schedule

The schedule for conduct and completion of any system-related training will be developed during the Full Scale Development phase of the program.

8.4-8.19 (Reserved)

8.20 Status Assessment

There is a risk that additional CTAS functions may increase controllers' workload. This is being mitigated by involving controllers and human factors analysis in all stages of CTAS development and placement of prototype versions in field development and evaluation facilities. There is also a risk that needed field support cannot be obtained from the FAA field organizations. Elimination of this risk will require support from the other CTAS organizations for pre-deployment and APML working with the RAPMs to plan for the CTAS deployment. An Interim Support Plan is being developed to document this approach. (reference: CTAS Risk Management Plan - Risk Summary & Status, dated 9/7/94)

9.0 TEST AND EVALUATION

9.1 Overview of Test Program

The CTAS test and evaluation (T&E) program is structured to adhere to the phased CTAS acquisition approach, allowing the incremental deployment of the CTAS functions. This approach emphasizes early user input and involvement with the concept, prototype, and specification processes, and open communication with the various organizations involved in the test process. Testing will be performed on planned development increments. The key elements of the testing strategy, as outlined in the CTAS Test and Evaluation Master Plan (TEMP) (reference: TEMP, 3.6, pages 14-22, 7/29/93), include:

1. CTAS functionality and NAS non-interference demonstrations at the FAATC
2. Limited Operational Assessments (LOAs) of the CTAS prototype system at the field development sites
3. Development Test and Evaluation (DT&E)
4. Full Operational Assessment (FOA)
5. Operational Test and Evaluation (OT&E)
6. Production Acceptance Test and Evaluation (PAT&E)
7. Field Shakedown

The Government is involved in all these testing activities, while the contractors are responsible for DT&E and PAT&E, as described in the following sections. CTAS functionality and NAS non-interference demonstrations, LOAs, DT&E, and FOA will be conducted during the Demonstration and Validation phase. CTAS testing during the Full Scale Development phase will consist of additional DT&E, followed by OT&E. PAT&E and Field Shakedown will be conducted during the CTAS Production phase.

9.1.1 Government Test Program

The CTAS T&E program will be administered by the TATCA Associate Program Manager for Test (APMT) from the FAATC (ACD-340). During CTAS development, ACD-340 will conduct CTAS functionality and/or NAS non-interference demonstrations at the FAATC, prior to installation of CTAS prototype software at field development sites, and will support CTAS LOAs at these sites. The FAATC demonstrations, conducted at the request of the Air Traffic Requirements Service (ATR) and the Operational Support Service (AOS), will ensure that hardware and software interfaces between CTAS advisors, and between CTAS and external NAS systems, do not interfere with NAS operations.

ACD-340 will monitor all contractor-conducted DT&E activities (see 9.1.2) to verify that CTAS functional requirements have been attained and to gain insight into potential problem areas that may require additional attention during FOA and formal OT&E. This insight, as well as "lessons learned" during field assessments and the FAA Technical Demonstrations, will allow ACD-340 to streamline OT&E activities by determining where OT&E overlaps DT&E and FOA and eliminating test duplication. OT&E streamlining will be dependent on the extent of CTAS software and hardware changes made between the DT&E, FOA, and OT&E phases.

After successful completion of DT&E for a CTAS advisor, an FOA will be conducted at the FAATC and may be performed at other selected site(s) (TBD). FOA sites will be other than the CTAS field development sites. The purpose of an FOA is to ensure that the subject CTAS incremental package is operationally suitable, effective, and properly integrated into the operational, procedural, and logistical structure of the NAS. The procedural and logistical aspects may be in effect for up to one year for FOA.

Upon successful completion of the FOA for the CTAS Planning Advisor and Passive Advisor packages, a decision to proceed with the Full Scale Development phase of CTAS, and the subsequent award of the contract will be made. The contractor will conduct additional DT&E on each system developed by installing the government furnished information (GFI) CTAS software on the contractor-procured hardware platform (with applicable system software).

OT&E will then be conducted at the FAATC and additional selected site(s) on that version of the system. DT&E and OT&E of subsequent CTAS packages will be conducted after successful completion of their associated FOA and receipt of appropriate approvals. At this point, all requirements for fielding a particular package of CTAS functionality must be met.

A decision to proceed with the Production phase of each CTAS advisor will be based on OT&E results of each package. Government-conducted testing during this phase consists of Field Shakedown.

9.1.1.1 Full Operational Assessment (FOA)

As stated above, an FOA will be conducted by the FAA at the FAATC and may be performed at other selected site(s) (TBD). An FOA Plan (TBD) will be provided for each incremental package. FOA will include testing a majority of the OT&E requirements with the exception of those which can be fulfilled only under the contract (e.g., training, technical manuals, etc.). Specifically, FOA will consist of a subset of the following OT&E test categories. (Reference: Draft OT&E Plan dated 6/94, 4.1 & 4.2, pages 6-8)

1. Integration Tests

   - System Level Requirements
   - NAS Performance Requirements

2. Operational Tests

   - Software Reliability and Maintainability
   - Human Factors
   - Operational Utilization
   - Risk Mitigation (Degraded Operations/Stress and Loading)
   - Site Software Adaptation
   - Operational Transition Analysis

9.1.1.2 OT&E

OT&E will be conducted by the FAA at the FAATC and at other selected site(s) (TBD). OT&E may be streamlined and requirements may be verified based on DT&E and FOA results (e.g., human factors, performance, etc.). OT&E at the Technical Center will take place in as operationally realistic environment as possible in regard to both operational and support personnel, equipment and the configurations to be used. Also, the various operational situations that can be anticipated will be simulated. Delta OT&E and follow-on site testing will be conducted at the key site(s) (TBD), to verify those requirements that can only be satisfied in the complete NAS environment.

A Test Readiness Review (TRR) will be held prior to any scheduled OT&E testing to discuss all relevant test issues. A Test Status Review (TSR) will be held to analyze the results of each formal OT&E activity. (Reference: Draft OT&E Plan, dated 6/94, 10.1 and 10.2, page 15)

In accordance with FAA Order 1810.4B, the Government OT&E activities are categorized into three phases: OT&E Integration testing, OT&E Operational testing, and OT&E Shakedown testing. Each phase addresses specific issues and requirements and ensures the readiness of the CTAS functions under test for field implementation. OT&E Integration and Operational testing are being combined for CTAS. The activities to be conducted during each of the OT&E testing phases are described in the following sections. (Reference: TEMP, 6., page 36, 7/29/93).

9.1.1.2.1 OT&E Integration Testing

OT&E Integration testing will be conducted by ACD-340 at the FAATC, and at the key site(s) (TBD), to verify that CTAS meets end-to-end system level and NAS performance requirements. Testing at the FAATC will address and evaluate the readiness of the system for integration and transition into the field. Delta OT&E and follow-on site

testing at the key site(s) will complete this verification on a site-specific basis. OT&E Integration testing is conducted with the following objectives:

1. Verify that the CTAS tools are properly interfaced and function with the appropriate NAS capabilities, including hardware, software, operational and maintenance activities.

2. Verify that the interfaces support the interface specification's mandated performance.

3. Minimize site problems by comprehensive integration testing and evaluation.

4. Verify that the NAS operational functions specified in NAS-SS-1000 are not degraded with the addition of CTAS functions.

5. Verify that the operational and maintenance procedures are suitable and usable in the NAS operational environment and do not cause any detrimental effect in the NAS operation.

(reference: TEMP, 6.2, page 38, 7/29/93).

9.1.1.2.2 OT&E Operational Testing

OT&E Operational testing will be conducted by ACD-340 at the FAATC to verify the operational effectiveness and suitability of CTAS. This testing will address the evaluation of system functions, data entry and display devices, human engineering and computer human interface (CHI), procedures, training, documentation for ATC operations, system maintenance, and support operations. User participation is a key part of OT&E Operational testing.
The OT&E/O testing effort is conducted with the following objectives:

1. Verification of the operational requirements.

2. Assessment of operational and maintenance procedures.

3. Assessment of system documentation completeness and usability.

4. Assessment of CTAS's operations and maintenance with respect to the variations in site configurations and adaptations.

5. Evaluation of the CHI requirements.

(reference: TEMP, 6.1, page 37, 7/29/93).

9.1.1.2.3 OT&E Shakedown Testing

OT&E Shakedown testing will be conducted by AOS at the FAATC, and at the key site(s), in concert with NAS users (AT) and maintainers (AF), to determine the adequacy of CTAS and its associated support features to meet operational needs. The results of shakedown testing will be one of the prime factors in the decision to deploy a CTAS package. At the key site(s), shakedown testing will determine the final operational readiness decision.

OT&E Shakedown testing activities include test runs of the CTAS functions, in a realistic operational environment, to assess the functionality and provide a determination of the operational and maintenance suitability, effectiveness, and usability. The testing will consist of executing approved procedures and will evaluate personnel training, logistic supportability, and the physical characteristics of the system. (reference: TEMP, 6.3, page 39, 7/29/93).

9.1.1.3 Field Shakedown

Field shakedown testing will be conducted by AF, AT, AOS, and ALM at the key site(s) and at each CTAS field deployment site. Key site shakedown may be waived if OT&E site shakedown was conducted at the key site as part of OT&E shakedown, and the first article production unit is the same as the unit upon which OT&E site shakedown was conducted.

9.1.2 Contractor Test Program

9.1.2.1 DT&E

DT&E will be conducted during both the Demonstration and Validation phase and the Full Scale Development phase of CTAS. DT&E includes functional, performance, reliability/ maintainability, and integration tests. Functional tests will verify the ability of CTAS to meet the approved functional requirements. Performance tests will be designed to verify the ability of CTAS to meet approved performance requirements. Reliability/maintainability tests will verify proper system response, including the ability to recover, upon injection of real and simulated hardware and software faults. Integration tests will be designed to ensure that hardware and software interfaces between CTAS advisor, the CTAS System, and external systems are correct and fully operational. (reference: TEMP, 3.6.5, page 20, 7/29/93)

All DT&E testing will be conducted according to FAA-approved DT&E Test Plans and Procedures and will be monitored by ACD-340. End users of CTAS will also be involved in the review and approval of these test plans and will witness all tests conducted. (reference: TEMP, 5., page 33, 7/29/93). For each advisor, a TRR will be held prior to beginning formal DT&E, and a TSR will be held at the conclusion of testing. (reference: Draft DT&E Plan dated 6/7/94, 4.2.2, page 11)

MIT/Lincoln Laboratory has prime responsibility for CTAS DT&E during the Demonstration and Validation phase. Formal DT&E testing of each CTAS advisor package during this phase will be conducted at three test levels: Computer Software Configuration Item (CSCI), Integration, and System. Each CTAS advisor is composed of multiple CSCIs. Using a bottom-up approach, testing will begin with the individual CSCIs and will continue until each CTAS package has been integrated and verified. Ultimately, all CTAS requirements allocated to an increment under test will be validated at the system level. (Reference: Draft DT&E Plan dated 6/7/94, 4.2, page 10). All formal DT&E activities will be conducted at MIT/LL except for the final system-level test, requiring appropriate external NAS interfaces, which will be conducted at the FAATC. (reference: DT&E Plan, 5.2, page 16, 6.2, page 24, and 7.2, page 29, 6/7/94 draft).

During the CTAS Full Scale Development phase, the contractor will conduct DT&E on the system developed by installing the GFI CTAS software on the contractor-procured hardware platform (with applicable system software). Formal DT&E testing during this phase will be at the system level and will be conducted at the contractor's facility.

9.1.2.2 PAT&E

The contractor will conduct PAT&E at his facility. PAT&E for CTAS will include a first-article test (FAT) on the first production unit, and tests of subsequent units at each field deployment site for each implementation package. The Government will witness all formal PAT&E activities, which will be conducted using Government-approved PAT&E Plan and PAT&E Procedures. The FAT may be waived if the first article production unit is exactly the same as the unit upon which OT&E was conducted.

9.2 T&E Schedule

Table 9-1 PHASE 2 TESTING

	PLANNED LOA	PLANNED DT&E	PLANNED FULL OPERATIONAL ASSESSMENT
Planning Advisor	Jan - Mar 1995	Nov 1994 - Apr 1995	May - Oct 1995
Passive Advisor	Apr - Aug 1995	Aug - Nov 1995	Dec 1995 - Apr 1996
Direct Advisor	Dec 1995 - Nov 1996	Dec 1997 - Mar 1998	Apr 1998 - Sep 1998
Future Enhancements	Dec 1996 - Jun 1997	Dec 1998 - Mar 1999	Apr - Sep 1999

(reference: ARD-40 CTAS Milestone Charts)

Phase 3 testing will be provided by ARD-40 before KDP-3 for the Planning and Passive Advisors.

9.3 T&E Responsibility Matrix

9.3.1 Government Test Organization

The overall management of the CTAS T&E program is the responsibility of the TATCA APMT (ATC Technology Branch (ACD-340) at the FAATC in coordination with the CTAS Program Manager (ARD-40).

The following subparagraphs detail the responsibilities of the government organizations supporting the CTAS T&E effort.

9.3.1.1 Program Manager (PM), ARD-40

ARD-40 is responsible for the acquisition and implementation of CTAS through last site Operational Readiness Demonstration (ORD). The PM, in conjunction with the Associate Program Manager for Test (APMT), will develop the Test and Evaluation Master Plan (TEMP) and oversee its revision prior to each Key Decision Point (KDP). (reference: TEMP, 4.1.1, page 23, 7/29/93).

9.3.1.2 Associate Program Manager for Test (APMT), ACD-340

ACD-340 is the lead CTAS testing organization. ACD-340's responsibilities include:

1. developing, and maintaining, an approved CTAS TEMP with the PM
2. performing functionality and NAS non-interference demonstrations
3. establishing and maintaining the TATCA laboratory environment for development and testing activities
4. monitoring DT&E activities
5. conducting OT&E Operational and OT&E Integration testing
6. supporting AOS during OT&E Shakedown testing

(reference: TEMP dated 7/29/93, 4.1.2, page 23)

9.3.1.3 Associate Program Manager for Requirements (APMR), (ATR-330)

ATR-330 is the liaison to the field sites and regions for AT operational support and acceptance, through close coordination with the Regional AXX-510 organizations, Systems Requirements Branch. The APMR's responsibilities include:

1. providing Air Traffic's operational and functional requirements for CTAS

2. monitoring DT&E, and supporting OT&E, to ensure that the CTAS requirements are satisfied

3. coordinating the availability of appropriate ATC personnel to support requirements development and operational assessments

(reference: TEMP, 4.1.3, page 23, 7/29/93).

9.3.1.4 Associate Program Manager for Operations (APMO), (ATM-100)

The APMO is responsible for:

1. determining the operational acceptability of CTAS prior to its delivery for operational testing and use in field facilities

2. monitoring Field Shakedown tests

(reference: TEMP, 4.1.4, page 24, 7/29/93)

9.3.1.5 Associate Program Manager for NAS Implementation (APMNI), (ANS-200)

The APMNI is the liaison to the field sites and regions for Airway Facilities (AF) support and acceptance of CTAS. (reference: TEMP, 4.1.5, page 24, 7/29/93). Close coordination between the T&E staff and ANS-200 will be necessary to ensure that all applicable CTAS implementation requirements are satisfied. This includes:

1. reviewing OT&E requirements, plans, procedures and reports

2. monitoring all OT&E tests

(reference: TEMP, 4.1.5, page 24, 7/29/93).

9.3.1.6 Associate Program Manager for Logistics (APML), (ALM-500)

The APML is responsible for ensuring that CTAS is fully supportable throughout its life cycle. This includes:

1. providing supportability requirements to the APMT for inclusion in the CTAS TEMP and as guidance for OT&E Test Plans

2. reviewing OT&E requirements, plans, procedures and reports

9.3.1.7 Office of Independent OT&E Oversight, (ATQ-3)

ATQ-3 provides independent assessment reports of operational effectiveness and suitability directly to the Administrator and Acquisition Review Committee. The responsibilities of ATQ-3 include:

1. reviewing all T&E requirements, plans, procedures, and reports

2. monitoring DT&E

3. monitoring OT&E

(reference: TEMP, 4.1.11, page 24, 7/29/93)

9.3.1.8 Operational Support Directorate (AOS)

AOS is responsible for:

1. providing resources to assist in the development of test scenarios and field development site adaptation at the FAATC

2. monitoring OT&E Integration tests and review the test results

3. preparing the OT&E Shakedown test requirements, plans, procedures, and reports

4. conducting OT&E Shakedown testing

(reference: TEMP, 4.1.8 and 4.1.10, page 25, 7/29/93)

9.3.1.9 Airway Facilities Regional Division

The AF Regional Division is responsible for providing facility-related requirements and for the overall CTAS field shakedown in cooperation with the Air Traffic Regional Division. (reference: TEMP, 4.1.9, page 25, 7/29/93).

9.3.1.10 Engineering, Test and Evaluation Service (ACN-500)

ACN-500 is responsible for providing and maintaining laboratory facilities at the FAATC, including the TATCA Laboratory. (reference: TEMP, 4.1.12, page 25, 7/29/93)

9.3.1.11 Technical Analysis and Support Branch (AFS-450)

AFS-450 will support ACD-340 and AOS during OT&E. (reference: TEMP, 4.1.13, page 25, 7/29/93)

9.3.2 Contractor Test Organization

MIT/LL has the overall responsibility for planning and conducting CTAS DT&E during the Demonstration and Validation phase. (reference: TEMP, 7/29/93; DT&E Plan, 3.1, page 7, 6/7/94 draft). The following organizations will support MIT/LL in this effort: NASA Ames, MITRE/Center for Advanced Aviation System Development (CAASD), and the Martin Marietta Corporation. (reference: DT&E Plan, 3.1, page 7, 6/7/94 draft).

The contractor has overall responsibility for planning and conducting DT&E during the Full Scale Development phase, and for PAT&E during the Production phase.

9.4 T&E Field Support Requirements

9.4.1 Personnel Requirements

The AT SDT will continue to play an important role in supporting CTAS testing during the development phases. Air traffic controllers and TMCs will participate in OT&E at the FAATC and during delta OT&E at the field development sites to ensure that CTAS is operationally effective and suitable for the field environment. (reference: OT&E Plan, 3., page 5, 6/94 draft).

FAA regional personnel will appoint a representative for coordination and support for CTAS implementation at each affected ATC facility. Specific test responsibilities will be defined in the OT&E test plans and reflected in the update to the PIP during Full Scale Development phase.

9.4.2 Test Equipment Requirements

Critical items to the T&E effort include not only the hardware and software portions of the system but also the corresponding test support items. Specific test equipment and test configurations will be provided in the test procedures associated with each tool or increment. (reference: OT&E Plan, 9., page 15, 6/94 draft). These items include but are not limited to the following:

1. Hardware and software required in the generation and operation of test scenarios and test simulations.

2. Hardware and software support tools required for live radar data, data collection, data reduction, data analysis, project management, and project administration.

3. FAATC laboratories and associated test beds with the required data recording, data identification, and data recall capabilities for testing control and analysis.

4. Complete system documentation required for usage, maintenance and training.

(reference: TEMP, 5.3, page 35, 7/29/93)

9.4.3 System Access

The Traffic Management Advisor (TMA) tool requires track and associated data from the Host computer. For those sites where en route radar coverage is inadequate to support TMA, this data may need to be supplemented with data from ARTS computers.

The Final Approach Spacing Tool (FAST) tool will require access to the ARTS IIIA FDAD and an interface to the ARTS IIIA input/output processor (IOP), and access to the ARTS IIIE Local Area Network (LAN). (reference: TEMP, 8.2, page 40, 7/29/93).

9.4.4 Space Requirements

To be supplied with revised TEMP, 11/94.

9.5 T&E Program Status

9.5.1 Test Results Summary

The CTAS TEMP was approved by the Test Policy Review Committee on July 29, 1993. There has been no formal DT&E or OT&E testing conducted to date. The FAA has been monitoring informal testing activities that have occurred with the SDT during concept development at NASA Ames and MIT/LL. (reference: TEMP, 5.1, page 33 and 6.4, page 39, 7/29/93). In addition, an initial functional baseline demonstration of the prototype code (version 2.1.1ft) was conducted at MIT/LL in August, 1993. (reference: DT&E Plan, 1.4, page 5, 6/7/94 draft).

Results of formal DT&E and OT&E testing will be supplied after each test phase for each tool/increment.

9.5.2 Outstanding Program Trouble Reports (PTRs)

There are no outstanding PTRs to date. During CTAS development, changes to the prototype software baseline are initiated through a Problem Report (PR) and are processed via the Change Request Tracking System managed by the CTAS Technical Review Board (CTRB).

9.5.3 Discrepancy Correction Process

PTRs will be identified, documented, and processed during all phases of DT&E and OT&E. MIT/LL will be responsible for categorizing PTRs that arise during DT&E. (reference: DT&E Plan, 6/7/94 draft). ACD-340 and AOS will be responsible for categorizing PTRs that arise during OT&E. (Reference: OT&E Plan, 7.2.4, page 14, 6/94 draft). PTRs will be discussed during TSRs for appropriate action and resolution. (reference: DT&E Plan, 4.2.3, page 11, 6/7/94 draft). ACD-340 will be responsible for tracking PTRs resulting from the CTAS test efforts and ensuring that proposed resolutions to PTRs are satisfactory. (reference: TEMP, 4.1.3, page 24, 7/29/93).

9.6-9.19 (Reserved)

9.20 Status Assessment

The CTAS functional and performance requirements and detailed CSCI design descriptions must be fully documented, approved and baselined prior to conducting DT&E/OT&E of a CTAS advisor package. CTAS software must be site configured and strictly configuration managed throughout DT&E and OT&E. There is an inherent risk in the CTAS development environment of losing T&E resources to other concurrent CTAS tasks. It is critical to plan all T&E activities within the structure of the entire CTAS project. The appropriate NAS interfaces required to conduct T&E activities must be available at the field site(s). (reference: Draft DT&E Plan dated 6/7/94, 4.2.1, page 11; Draft OT&E Plan, 4.4, page 9, dated 6/94).

10.0 SYSTEM SUPPORT

10.1 System Support Concept

Maintenance and AF training for the prototype CTAS through FOA will be the responsibility of the Program Office. The production CTAS will be supported initially by a contractor who will provide full contractor maintenance and logistics support (CMLS) services for a minimum of one year following installation at each deployment site. AF personnel will be trained/ familiarized in system failure recognition and CMLS contractor trouble notification. After FAA personnel are trained and the support system is in place, CTAS will be supported by the FAA. (reference: ILSP 94-500-002 dated July, 1994)

10.1.1 Hardware

In the field, site maintenance of CTAS will require either an FAA site technician or the contractor to correct equipment failures on-site by replacing the faulty lowest/line replaceable unit (LRU). In the case of CMLS, the contractor will be allowed a two-hour response time after notification of system trouble and a 30-minute mean time to restore (MTTR) period after arrival on-site to return the system to a fully operational condition. (reference: ILSP 94-500-002 dated July, 1994)

10.1.2 Software

CTAS second level engineering support will consist of software maintenance, update or enhancement functions conducted by either AOS or the contractor under the technical direction of ANA. ARD-40 will advise ANA on matters dealing with CTAS fundamental designed functionality and the underlying data bases and algorithms. (reference: ILSP 94-500-002 dated July, 1994)

10.2 Special Support Facilities

10.2.1 Mike Monroney Aeronautical Center

The NAILSMT suggested the need for a program support facility at the Logistics Center during the first program NAILSMT Meeting; this will be determined by ARD-40 prior to contract award.

10.2.1.1 Restoration Response Level

TBS by the Program Office prior to contract award.

10.2.1.2 Field Level Maintenance

TBS by the Program Office prior to contract award.

10.2.1.3 Depot Level Maintenance

TBS by the Program Office prior to contract award.

10.2.1.4 Engineering Support

TBS by the Program Office prior to contract award.

10.2.2 FAA Technical Center

The NAILSMT suggested the need for a program support facility at the Technical Center during the first program NAILSMT Meeting; this will be determined by ARD-40 prior to the contract award.

10.2.2.1 Restoration Response Level

TBS by the Program Office prior to the contract award.

10.2.2.2 Field Level Maintenance

TBS by the Program Office prior to contract award.

11.0 PROGRAM SCHEDULE INFORMATION

11.1 NAS Implementation Schedule

The CTAS Program is in R&D; deployment sites have not been identified and released by AT yet. Due to sensitivity of information, the CTAS contracting officer has recommended against releasing any implementation schedules until after contract award.

11.2 Deployment Schedule

TBS by the Program Office after contract award.

11.3 Site Implementation Schedule

TBS by the Program Office after contract award.

11.4 Schedule Dependencies

CTAS schedule dependencies for the base contract are:

1. ARTS IIIA & E
2. Host interface unit

CTAS schedule dependencies for contract options are:

1. Stand-alone TRACON Automation Replacement System
2. Advanced Automation System
3. Data Link Processor
4. Introduction of color controller displays
5. Weather system improvements

11.5-11.19 (Reserved)

11.20 Status Assessment

There is a risk of underestimation of the level of effort required to accomplish the deployment and enhancement tasks by the Deployment Contractor. Mitigation will require early distribution of the RFP and CTAS prototype, insuring appropriate evaluation factors for award, requiring contractor risk management plan, conducting careful review of contractor's cost/staffing and involving system developers in management of contractor. Also the implementation schedule is very ambitious which creates a risk of schedule delays. (reference: CTAS Risk Management Plan - Risk Summary and Status dated 9/7/94)

12.0 ADMINISTRATION

12.1 Acquisition Program Summary

In order to mitigate acquisition risk and expense and to provide an operational system as soon as possible, the FAA is developing CTAS application software based on real-time simulation evaluations with the target end-users, i.e., air traffic controller personnel., The CTAS acquisition will incorporate Commercial Off-The Shelf (COTS) computer hardware and computer operating system software, thus greatly reducing technical risk and the amount of documentation generated, and increasing system supportability, maintainability, and capabilities for future system expandability. (reference: Draft CTAS Acquisition Plan Summary dated June 3, 1994, page 2)

12.1.1 Market Survey

A survey of existing systems revealed that a system meeting the CTAS mission need does not exist. In the United States, it was found that NASA was developing a system that met some of the CTAS objectives. Automation systems identified outside of the United States include systems from France, Germany, and Australia. Since another U.S. Government agency, NASA, was already developing a system with CTAS capabilities, the FAA decided to take advantage of this existing technology and established a cooperative research program with NASA to further develop, evaluate, and test system functions that fulfill the CTAS mission need. (reference: Acquisition-1 Phase Summary for Center-TRACON Automation System dated 9/16/94, page 1)

12.1.2 Acquisition Strategy

ARD-40 has planned a logical sequence of events to complete the Demonstration and Validation Phase leading up to KDP-3. Currently, ARD-40 is developing the CTAS application software for each of the advisors. The CTAS advisors will be developed and subjected to FOA prior to KDP-3. Each advisor will be presented separately for KDP-3 approval, except the Planning and Passive Advisors which will be presented simultaneously. Upon KDP-3 approval, each advisor will be provided to ANA. ANA will be responsible for the acquisition activities leading to KDP-4 and CTAS deployment through the production and deployment contractor. The production and deployment contractor will be responsible for supplying the COTS hardware and software, integrating the GFE software, delivery, installation, training, maintenance, and logistics support. (reference: Draft CTAS Acquisition Plan Summary dated June 3, 1993, page 2)

12.2 Contracting Information

Research and Development is being conducted jointly with: 1) NASA Ames Research Center, through an Interagency Agreement with FAA Headquarters; 2) MIT Lincoln Laboratory, via an Interagency Agreement between the U.S. Air Force and the FAA Headquarters; 3) the Center For Advanced Aviation System Development (CAASD) of the MITRE Corporation, through contract; 4) and the FAATC, through a Program Directive. Actual field evaluation and development is being accomplished at the Denver and Dallas/Ft. Worth ARTCCs and TRACONs. Host software modifications needed to support CTAS are being performed by Computer Science Corporation (CSC) through the En Route Software and Development Support contract with FAA Headquarters. Each of the above organizations have one or more subcontractors performing in a service or support role.

12.2.1 Prime Contract

Deployment contract has not been awarded.

12.2.2 Service Contracts

NASA Ames Research Center
MS 210-9
Moffett Field, CA 94035-1000

MIT Lincoln Laboratory
244 Wood Street
Lexington, MA 02173

Wyndemere, Inc.
4900 Pearl East Circle
Suite 202E
Boulder, CO 80301

CAASD Corporation
7525 Colshire Drive
McLean, VA 22102

Computer Sciences Corp.
System Sciences Division
100 Decadon Drive, Suite 200
Egg Harbor Township, NJ 08232

Martin Marietta
Management and Data Systems
PO Box 8048
Philadelphia, PA 19101

Unisys Corp.
Government Systems Group
PO Box 64525
St. Paul, MN 55164

12.2.3 Program Support Contracts

Martin Marietta
Management and Data Systems
400 Virginia Avenue, S.W.
Washington, DC 20024

Adsystech
8401 Colesville Road
Silver Spring, MD 20910

JIL Systems
Crystal Gateway 4
1213 Jefferson Davis Highway
Arlington, VA 22202

Diversified International Sciences Corp.
9901-R Business Parkway
Lanham, MD 20706

12.2.4 Regional Contracting

None identified at this time.

12.2.5 GFP/GFI/GFE Obligations

The CTAS software tools are intended to be supplied to the deployment prime contractor as GFI. Additional information regarding this topic will be provided prior to KDP-3.

12.3 Program Management (PM)

12.3.1 PM Charter

The Terminal Air Traffic Control Automation (TATCA) Program Manager, ARD-40, is given the authority to organize and execute the CTAS Project during the developmental phase; for the production phase, the CTAS Program will be handed off to ANA.

The PM is responsible for the overall management and direction of all FAA activities necessary for successful development, procurement, test and evaluation support, and engineering support for the TATCA program. The PM is responsible for defining all tasks to be performed, principal products, staffing estimates, contract cost estimates, budget estimates, schedules, management procedures and controls, and required equipment and facilities. The PM serves as the FAA headquarters liaison with other Government agencies; establishes matrix support agreements with other functional organizations within FAA; serves as the spokesperson for the program within and outside the FAA; and ensures timely preparation and submission of reports documenting changes in established cost, schedule, benefit and budget baselines for use by higher officials. The PM exercises fiscal responsibility for budget formulation and execution; through the appropriate channels, keeps the Administrator informed if program objectives cannot be met; evaluates the impact of proposals to increase or decrease the resources authorized for program execution; and maintains an updated Program Master Plan.

The PM accomplishes the majority of his functions by the use of matrix management techniques using established functional organizations from FAA headquarters, centers, regions, and other Government agencies. The integration of these efforts is essential for successful mission accomplishments.

(reference: Charter for the TATCA Program Manager)

12.3.2 Program Management Team (PMT)

Table 12-1 CTAS Program Management Team for the Development Phase

NAME	ORGANIZATION	ROLE	TELEPHONE
John Rekstad	ARD-40	Program Manager	(202)267-7611
Lee Olson	ARD-40	APME/Testing WG	(202)267-7358
Craig Marina	ARD-40	CTAS Engineer/Prototyping WG	(202)267-7083
Ruby Chin	ARD-40	Business Manager	(202)493-4141
Melv Netzer	ATR-334	APMR	(202)267-9174
Richard Page	ACD-340	APMT	(609)485-5285
Richard Fleagle	ASE-120	APMSE	(202)287-8617

Dorothy Combs	ANS-210(NISC)	APMNI	(202)651-3057
Dave Waits	ALM-500	APML	(202)267-7500
Larry Young	ASW-422	RAPM	(817)222-4223
Paul Johnson	ARD-40	Site Adaptation WG	(202)267-8285
Bob Sheftel	ARD-40	Re-engineering WG	(202)267-7645
Richard Kahn	ASU-340	APMC	(202)267-7342
Don Keen	ANM-422	RAPM	(206)227-2408
Bill Kolp	ASW-421	RAPM	(202)222-4212

12.3.3 Program Status Reporting

The TATCA Program Manager holds CTAS Program Management staff meetings each Monday at 9:00 A.M. with PMT members. A weekly telecon is held every Tuesday at 1:00 P.M. with representatives from the developmental sites, PMT members, NASA-Ames Research Center, MIT Lincoln Laboratory, Martin Marietta, FAATC, and CAASD. A regular PMT meeting is held bimonthly with field representatives participating.

12.3.4 Exception Management

Management by exception involves identifying and resolving implementation and transition problems as early as possible, at the lowest organizational level . Members of the CTAS Implementation Management Team (IMT) will identify implementation and transition issues as early as possible, which then will be documented and tracked in the Transition Information Exchange (TIE) Summary Report (Appendix B to the PIP) by the APMNI. Other implementation and transition issues will be identified by the field during PIP review.

A problem or concern becomes a national issue only upon submission by a division manager, after all avenues for resolution within the purview of that manager have been exhausted. The PMT is responsible for resolving issues referred to them by division managers. The APMNI is responsible for tracking national issues related to the CTAS and periodically reports the status of issues to both the PM and the organization(s) which identified the problem. Because national issues may have implications beyond a single acquisition program, the PMT will coordinate implementation issues, resolutions and lessons learned with relevant program offices and with NAS transition managers. The APMNI shall periodically report implementation issue actions and information for possible inclusion in the FAA's quarterly Consolidated Transition Information Exchange Summary Report, distributed to all acquisition programs.

The organization which resolves an issue completes an Implementation Issues Closure (IIC) form and transmits it through the same channels by which the issue was originated. The originating organization endorses the resolution and returns the IIC form to the APMNI formally stating their acceptance of the resolution. The APMNI ensures that the PIP is updated to reflect the results of issues which have been resolved. Facility managers, sector managers, and regional division managers share results of locally/regionally resolved problems among themselves.

(reference: Implementation Process Guidelines dated June, 1994, p. 25-31)

12.4 Quality Assurance

12.4.1 Program Acceptance Criteria

TBS by the CTAS Program Office after KDP-2.

12.4.2 Risk Management

TBS by the CTAS Program Office after KDP-2.

12.5 Configuration Management (CM)

12.5.1 CM Responsibilities

This section describes the CM role in the CTAS program and identifies the individual responsibility for fulfilling that role during the various phases of the acquisition transfer of baseline control to the field maintenance organization.

12.5.1.1 Pre-Production CM

Prior to acquisition, CM will be applied to the program in accordance with the "CTAS Technical Review and Configuration Management Plan," CTASPO-TRCM-001, dated March 10, 1994. The primary emphasis follows.

To assist CTAS development personnel involved with design and test activities, requirements identification, and preparation of project related documentation, this procedure establishes the necessary and appropriate control structure for timely initiation, reviews, and expeditious approval of proposed technical program material. The overall objectives of this procedure are:

1. To provide a structure in which technical considerations affecting the CTAS configuration can be addressed in a way that involves all responsible parties.
2. To serve as the technical review board for modifications to CTAS software and hardware and, when applicable, to serve as the change control authority for modifications to documents under program control.
3. To provide a mechanism for approval of proposed and/or modified requirements resulting from such things as the SDT and prototype and/or operational systems development activities.
4. To be the approval authority for all products developed in support of program objectives while assuring the correlation and coordination of parallel development efforts. The CTRB will further act as forwarding authority when higher level approval is required.
5. To provide direction/recommendations to the NASA Ames and MIT/LL configuration control boards (CCB) for release/implementation of software changes.
6. To be the approving authority on establishing the CTAS baselines for development and test activities.

The procedure applies to all documentation identified in the CTAS Data Requirements List (DRL) contained in CTASPO-TRCM-001, as well as to newly proposed technical activities conducted by and/or for ARD-40 in support of the CTAS project. It further defines all organizational group responsibilities related to, and associated with, the CTRB.

The CTRB is chartered with the responsibility for review and approval of technical material prepared on the project. The membership of the CTRB is drawn from all development team and FAA Associate Program Managers' (APMs) organizations that may possibly be affected by the item(s) under review. CTAS program personnel are required to adhere to the process described herein when seeking approval for their proposed technical material (i.e., CTAS Software Change Requests (CSCRs), defining the CTAS hardware and software configuration item, baselining requirements, systems architecture, approval of any/all CTAS documentation). This process is intended for use throughout the program life cycle. The CTRB will ensure consistency and adequacy of program documentation and

system characteristics, improve program wide communications, assist in controlling the interdependencies relative to various program initiatives and coordinate with appropriate FAA CCBs.

12.5.1.2 Contract CM

During the validation phase, CM shall be controlled by the contractor, using a system which is acceptable to the FAA, which need not be in accordance with FAA-STD-021. Prior to the production phase, the contractor shall provide a configuration management plan in accordance with FAA-STD-021, paragraph 10.2(b). The contractor shall establish configuration control in accordance with FAA-STD-021 at the start of the production phase and shall maintain it during that phase. The following configuration items shall be subject to configuration control:

1. All software/firmware from the start of the production phase.

2. All CTAS hardware including replaceable modules, printed circuit boards, subassemblies, and spare parts-peculiar from the start of the production phase.

3. All CTAS contractor developed documentation.

Final production configuration baselines shall be established within 30 days after government conducted Functional Configuration Audits/Physical Configuration Audits (FCA/PCA) audits.

After approval by the Contracting Officer, the software documentation listed below shall become the baseline for configuration control of software/firmware requirements. The contractor shall provide change pages for such approved software documentation within five working days after any design change, which alters any portion of that approved software documentation has occurred.

1. User Manual for all Computer Software Configuration Items (CSCIs)
2. Program Maintenance Manual
3. Computer Program Functional Specifications

The purpose of establishing configuration control of software/firmware is to document the implementation of the contractor's software/firmware design. Notwithstanding approval of any software documentation and subsequent submission of change pages for software documentation, all software/firmware to be furnished in the CTAS, spare replaceable modules, printed circuit boards and subassemblies, and spare parts-peculiar shall meet all requirements of this specification.

12.5.2 Configuration Control Boards (CCB)

Pre-production:

CTAS Technical Material - DRL items will be released to the appropriate organization for further approval or incorporation, if necessary. Software changes will be released by the ARD-40 CM Technical Administrator. If during the CTRB review, any of the CTRB members indicate a cost or schedule impact to another program, the CTRB will review these impacts for reasonableness and forward them (if deemed acceptable) to the appropriate CCB. An internally generated Field Action Request (FAR) to a document under the control of an external organization (such as the ARTS CCB) will be forwarded to the external organization. Incorporation of a CTRB-approved item into baselined products must be performed according to the CTAS CM procedures.

CTAS software - The authority for managing the operational CTAS development is vested in the TATCA Program Office. A CTRB, which is chaired by the CTAS Project Manager appointed by the TATCA Program Office, addresses and provides direction for technical issues concerning the operational development of CTAS. CTRB membership includes, but is not limited to, NASA Ames and MIT/LL. The CTRB is responsible for approving the

software design and for approving/denying all changes to the software which have an operational impact on the system.

NASA Ames is responsible for the CTAS prototype development.

MIT Lincoln Laboratory is responsible for the development of the CTAS operational software. This includes the development, documentation, and the Development Test & Evaluation (DT&E) of the Computer Software Configuration Items (CSCIs)

The FAATC is responsible for monitoring the DT&E activity and for the Operational Test & Evaluation (OT&E) of the CTAS.

12.5.3 CM Milestones

The CTAS program schedule currently identifies those CM-related items associated with the Deployment Readiness Review (DRR) checklist. Configuration control will be formally initiated following completion of FCA/PCA.

12.5.4 Configuration Items (CI)

This section lists the major program items which will be placed under configuration control for transfer from the acquisition program office to the field maintenance organization during implementation.

The CTAS Data Requirements List (DRL) identifies the planned program GFI documents being prepared for the contractor. Each initial release of a DRL item, as well as any subsequent updates, will be formally processed and controlled by the CTRB. Appropriate design/contractual deliverables will be identified prior to transferring the configuration control board responsibilities to field organizations.

(reference: CTAS Technical Review & Configuration Management Plan dated 3/10/94)

12.6-12.19 (Reserved)

12.20 Status Assessment

The CTAS program administration has the necessary controls, milestones, and teams for normal program development. Risk is minimal.

13.0 IMPLEMENTATION (REQUIREMENTS)

13.1 Implementation Support Organization

13.1.1 Associate Program Manager for NAS Implementation (APMNI)

The Manager of the Program Integration Office, ANS-210, assigns APMNI positions upon request by the program office. These positions currently are held by NAS Implementation Support Contract (NISC) personnel. Dorothy Combs was assigned as the CTAS APMNI; she may be reached at (202)651-3057 or via FAA cc:mail. The CTAS APMNI is a member of the Program Matrix Management Team and is responsible to the PM for development and update of the PIP, co-chairing the Implementation Management Team (IMT), coordinating and tracking the resolution of implementation and transition issues, assisting the PM in compiling implementation information and data required to develop and refine implementation budget estimates, reviewing contractor-developed implementation plans, procedures, and reports; and assisting in the development of key decision point (KDP) exit criteria relating to implementation and transition. The APMNI attends and participates in the PM's weekly status meetings, weekly telecons, and bimonthly PMT meetings.

13.1.2 Implementation Management Team (IMT)

The IMT for the CTAS project has been established, and the PM has agreed that IMT meetings should be held in conjunction with the PMT meetings to reduce travel expenses. The responsibilities of the IMT are to:

1. review and comment on the initial PIP and each of its updates; initial PIP is due before KDP-2 and updates are required before each succeeding KDP
2. support identification and incorporation of implementation related requirements into the Program Management Plan (PMP) and procurement documents
3. validate implementation strategies proposed by the equipment contractor
4. support resolution of program implementation and transition issues through the Transition Information Exchange (TIE) process
5. facilitate compliance with implementation policy and processes

(reference: Implementation Process Guidelines dated June, 1994. p. 15)

Table 13-1 CTAS Implementation Management Team for the Development Phase

NAME	ORGANIZATION	POSITION	TELEPHONE
John D. Rekstad	ARD-40	TATCA Program Mgr	(202)267-5418
Lee Olson	ARD-40	APME/Testing WG	(202)267-7358
Ruby Chin	ARD-40	Business Manager	(202)493-4141
Richard D. Page	ACD-340	APMT	(609)485-5285
Dave Waits	ALM-500	APML	(202)267-7500
Dorothy Combs	ANS-210 (NISC)	APMNI	(202)651-3057

Melv Netzer	ATR-334	APMR	(202)267-9174
Richard Fleagle	ASE-120	APMSE	(202)287-8617
Larry Young	ASW-422	RAPM	(817)222-4223
Bill Kolp	ASW-421	RAPM	(817)222-4212
Don Keen	ANM-422	RAPM	(206)227-2408
Bob McCormick	ASW-512	AT NAS Implementation Specialist	(817)222-5576
Bob Mullikin	ZDV-512	AT NAS Implementation Specialist	(303)651-4305

13.1.3 Regional Associate Program Manager (RAPM)

The Regional Division Managers (AXX-400) are responsible for assuring that implementation sites review proposed implementation requirements, assess requirements against local constraints, and identify and seek resolutions to any issues associated with program requirements. Typically, the Regional Division Managers delegate coordination of these functions to the RAPMs to include serving as a member of the PMT and IMT, responsibility for regional review of the PIP/GSIP, participation in TIEs for programs to be implemented within the region, and development of Site Implementation Plans (SIPs). (reference: Implementation Process Guidelines dated June, 1994, p. 41)

The RAPMs assigned to date represent the development sites of Denver and Dallas-Fort Worth ARTCCs and TRACONs. These RAPMs are listed below:

Table 13-2 Regional Associate Program Managers for the Development Sites

NAME	ORGANIZATION	TELEPHONE
Don Keen	ANM-422	(206)227-2408
Bill Kolp	ASW-421	(817)222-4212
Larry Young	ASW-422	(817)222-4223

13.1.4 Technical On-site Representatives (TOR)

To be supplied by IMT before KDP-3 for the Planning and Passive Advisors.

13.1.5 Contract Support:

TABLE 13-3 Acquisition Phase-2: Existing Contracts

CONTRACTUAL ORGANIZATION	PRODUCT/SERVICE
Adsytech	Technical field support at development & deployment sites
Unisys, Terminal Software Development (TSD)	ARTS s/w modifications, Full Digital ARTS Display (FDAD) modifications, implement common ARTS interface
Martin Marietta (TEIS contract)	Technical engineering & integration services, program office support
To be determined (TBD) (SETA Contract)	Support operational system development documentation
CSC (ERSDS)	HCS software modifications
MITRE	Requirements definition/specification
MIT/LL	Structured S/W re-engineering & S/W documentation
NASA Ames	Prototype development

TABLE 13-4 Acquisition Phase-3: Existing Contracts

CONTRACTUAL ORGANIZATION	PRODUCT/SERVICE
Martin Marietta (TEIS contract)	Technical engineering & integration services, program office support
Martin Marietta (NISC contract)	Implementation support

(reference: Draft Acquisition Plan Summary dated June 3, 1994, page 5)

13.2 Site Implementation Process

Site implementation includes activities performed primarily by regional and site personnel to implement a change in the functional or performance capability of a specific site. Whereas the program-level implementation activities are defined in relation to the five acquisition phases, site implementation activities are defined in relation to time intervals or phases which conform to the site implementation milestones. The planning for implementation at a specific site normally begins during the demonstration/validation phase of the program acquisition cycle and continues into full scale development and production. Site implementation per se begins with the site survey which

is normally conducted during the Full-scale development phase. The relationship of site implementation phases to program implementation phases may vary in order to mesh with a program's delivery schedule. Seven phases of site implementation are defined below. Site implementation plans identify tasks and resource requirements to be accomplished during each of these phases. (reference: Implementation Process Guidelines dated June, 1994, page 17)

13.2.1 Implementation Planning Phase

Spanning the time prior to equipment installation and extending into the integration and testing of new systems, there are ongoing program implementation planning activities. These activities include, but are not limited to such activities as:

1. review and comment on the initial PIP and each of its updates
2. participation in TIEs and resolution of local and regional implementation discrepancies and issues
3. review and comment on program contract data requirements lists
4. attendance/participation in program reviews, design reviews and other activities which may require the insight and experience of personnel from the field

(reference: Implementation Process Guidelines dtd June, 1994, page 17)

13.2.1.1 Implementation Activities

The implementation planning activities requiring field participation are:

1. attending the PMT and IMT meetings
2. facilitating planning and information exchange
3. serving on test teams
4. reviewing and commenting on the initial PIP/GSIP and each update
5. participating in Transition Information Exchange (TIE) for programs to be implemented within the region
6. assuring the conduct of site implementation planning within the region
7. developing the Site Implementation Plan

13.2.1.2 Requirements

To be provided by the IMT prior to KDP-3 for the Planning and Passive Advisors.

13.2.2 Pre-Installation and Checkout (Pre-INCO) Phase

This phase begins with the conduct of the program site survey and concludes with delivery of program equipment at the site. During the interval between these two milestones, all site preparation tasks necessary for installation of equipment are performed.

13.2.2.1 Implementation Activities

To be provided by the IMT after contract award.

13.2.2.2 Requirements

To be provided by the IMT after contract award.

13.2.3 Installation and Checkout (INCO) Phase

The INCO phase begins with delivery of program equipment at the site and continues through successful completion of testing of the equipment in stand-alone mode. No FAA interfaces are integrated during this phase. The equipment contractor is normally responsible for installation activities and FAA personnel are in a monitor role.

The INCO phase entails all the activities associated with receipt and positioning of program equipment, positioning and testing of stand-alone functionality. The milestone demarking the end of this phase is normally conclusion of the Contractor Acceptance Inspection (CAI). (reference: Implementation Process Guidelines dated June, 1994, page 19)

13.2.3.1 Implementation Activities

To be provided by the IMT after contract award.

13.2.3.2 Requirements

To be provided by the IMT after contract award.

13.2.4 System Integration Phase

This phase begins when CAI is accomplished and concludes when the FAA declares Initial Operational Capability (IOC) for the system. During this phase, all FAA internal and external interfaces are established. The fully integrated functioning of program equipment and systems is verified and operational responsibility for the system is transferred from the contractor to the FAA. (reference: Implementation Process Guidelines dated June, 1994, page 19)

13.2.4.1 Implementation Activities

To be provided by the IMT after contract award.

13.2.4.2 Requirements

To be provided by the IMT after contract award.

13.2.5 Field Shakedown Phase

This phase extends from the IOC milestone through completion of the Operational Readiness Demonstration. During this interval, the technical and operational work forces and management personnel employ the new equipment in a carefully controlled operational environment to verify that the fully integrated system is fully functional. Use of the new system capabilities typically begins with use for limited periods of time during low traffic time periods, gradually increasing usage for longer periods under full traffic load conditions. During this time, site personnel develop full proficiency in the maintenance and operation of the newly configured operational system. During this time, the contractor is in a support role.

13.2.5.1 Implementation Activities

To be provided by the IMT after contract award.

13.2.5.2 Requirements

To be provided by the IMT after contract award.

13.2.6 Dual Operations Phase

This phase follows completion of the ORD milestone through commissioning of the system for on-going operations through completion of the Joint Acceptance Inspection (JAI). During this interval, the system is commissioned and pre-determined minimum number of personnel are certified on use of the system. The replaced system is available in back-up mode. The Dual Operations phase will not be applicable to all acquisition programs. (reference: Implementation Process Guidelines dated June, 1994, page 19)

The JAI is an activity to gain consensus of all involved that projects for facility establishment, improvement, or relocation are completed in accordance with national criteria, and that the facility is capable of performing its advertised functions.

Pre-JAI Activities: Once the specified construction and/or installation work has been completed, the on-site engineer notifies the sector and the AF planning office by phone and/or memorandum. A JAI shall be performed before a new, improved, or relocated facility, system, or equipment is accepted for maintenance and/or operation on a commissioned basis in the NAS. The regional AF division is responsible for notifying the joint acceptance board chairperson when the facility will be ready for the JAI.

(reference: FAA Order 4650.30 dated 5/4/93, page 5-2 and Appendix 2, page 3)

13.2.6.1 Implementation Activities

To be provided by the IMT after contract award.

13.2.6.2 Requirements

To be provided by the IMT after contract award.

13.2.7 Equipment Removal Phase

This phase follows completion of the JAI milestone and extends until all replaced equipment, implementation support and test equipment is removed and the facility is refurbished or restored. Included during this phase are all activities necessary to resolve outstanding program trouble reports (PTRs), outstanding DRR checklist items and JAI items. At the completion of this phase, implementation activities identified in the SIP requirements will be accomplished. (reference: Implementation Process Guidelines dated June, 1994, page 19)

Equipment removal costs are the responsibility of the Program Office; however, since CTAS is not replacing any existing hardware, equipment removal is not required.

The initial Disposition Plan for CTAS will be developed and supplied by ALM-500 during the Full Scale Development Phase. The objective of the Plan will be to provide the Program Office, the Logistics Center, and the Regions with the information necessary to determine if there are any critical disposition/disposal concerns or cannibalization requirements for the system and its components. Items that will be addressed include: national and local equipment requirements; performance of the removal effort; hazardous materials considerations; precious metals recovery; and identification/resolution of environmental, legal, safety, transportation, storage, handling and cost/funding issues.

13.2.7.1 Implementation Activities

To be provided by the IMT after contract award.

13.2.7.2 Requirements

To be provided by the IMT after contract award.

13.3-13.19 (Reserved)

13.20 Status Assessment

There are no identified risks that would prevent equipment implementation. A comprehensive implementation review will be performed by the IMT after contract award..

Appendix A: GENERIC SITE IMPLEMENTATION PLAN (GSIP)

Prior to KDP-3 for the Planning and Passive Advisors, the attached GSIP will be reviewed and tailored for CTAS implementation by the IMT.

Activity Number	Activity	WBS Ref	Responsible Organization	Labor Category	Time to Complete	Comments
	PLANNING PHASE					
1	Develop labor estimates for CTAS site preparation	7.1.2				
2	Develop travel cost estimates for site preparation	7.1.2				
3	Coordinate advanced funding PA for CTAS site prep materials with ANC-200	7.1.2.1				12 months prior to equipment delivery
4	Identify the following:					
	Installation site(s)	11.2				
	Site survey date(s)	11.3				
	Equipment Delivery date(s)	11.3				
	Equipment Installation date(s)	11.3				
5	Identify Government site survey personnel:	13.2.2.2.2				
	Site AT coordinator(s)					
	Site F&E coordinator(s)					
	Technical Onsite Representatives (TOR)	13.1.4				
6	Verify AF endorsement of CTAS ORDoc	3.1.1				
7	Coordinate CTAS Spec with Regional AF Division	3.1.1				
8	Coordinate CTAS Spec with Regional AT Division	4.2				
9	Identify Regional Project Personnel:	13.1				
	Regional 4XX Personnel					
	Regional 5XX Personnel					
	Regional Logistics Coordinator					
	Site TOR(s)					
10	Certify advanced funding PA is in place	7.1.2				
11	Develop cost estimates for site upgrades not funded by ANC-200	7.1.2.1				
12	Review and update F&E Project Material List	6.9.2				
13	Identify site AF support personnel requirements:	3.1.1				
	special quals					
	particular background needed					
	maintenance and support personnel					

Activity Number	Activity	WBS Ref	Responsible Organization	Labor Category	Time to Complete	Comments
14	Identify site AT support personnel requirements	4.1				
15	Identify site access and badging requirements for installation and testing personnel	8.1.2				
16	Notify Office of Labor and Employee Relations of project deployment	8.2.4				
17	Identify the AT changes to:	4.2				
	Admin. and maintenance procedures					
	Interfacility procedures					
	System backup & cutover procedures					
18	Identify AF changes to:	3.2				
	Admin. and maintenance procedures					
	Interfacility procedures					
	System backup & cutover					
19	Complete a preliminary environmental impact assessment if required	6.6				
20	Provide inputs to AEE for potential environmental impact studies if required	6.6				
21	Complete Environmental Due Diligenic Audit (EDDA) if required	6.1				
	Interviews					
	Site Survey					
	Aerial Photos					
	Record Search					
	Past and present HAZMAT use/ Spills onsite					
	and in the vicinity					
	Title check					
22	Complete Site Assessment (Phase 1 may be part of EDDA) if required	6.1				
	Real Property (Structures)					
	PCB's					
	HAZMAT					
	Asbestos					
	Radon					
23	Coordinate Training Course Requirements with ALM-700	8.3				
24	Develop a preliminary site survey checklist from:	8.3				
	contractor provided worksheets					

Activity Number	Activity	WBS Ref	Responsible Organization	Labor Category	Time to Complete	Comments
	lessons learned from previous installation					
	lessons learned from similar project installations					
25	Conduct Initial FAA site survey to update site drawings and complete	13.2.2.1.1				
	site survey worksheets					
26	Identify unique space requirements for implementation	13.2.3				
	equipment storage					
	loading dock area requirements					
	spares storage area					
27	Identify additional HVAC requirements based on CTAS	6.2.2				
	equipment installations:					
	duct runs					
	refrigeration equipment layout					
	additional ceiling, wall, & floor penetrations					
	additional power and circuit breaker requirements					
	additional cooling requirements including cabinet fans					
28	Identify additional Telco requirements	6.1				
	analog & digital interfaces & demarcs					
	added Telco line and hardware requirements					
	analog and digital wire runs and closets to be used					
	lead times for service requests (TSR's)					
	wall, ceiling and floor penetrations					
	unique drilling requirements					
	will an operational support telephone system (OSTS)					
	be required					
29	Determine if sufficient floor space is available in the facility. If not	6.8.2				
	generate local NCP for an alternate location.					
	PRE-INCO PHASE					
30	Update labor estimates for CTAS site prep	7.1				
31	Update estimates for travel costs for CTAS prep					
32	Identify site installation team(s):	13.1				
	AF Sector & Site Coordinators					
	AT Sector & Site Coordinators					
	Sector & Site Coordinators for testing					

Activity Number	Activity	WBS Ref	Responsible Organization	Labor Category	Time to Complete	Comments
	Security Site P.O.C.					
	Site technical onsite representative (TOR)					
33	Update the HAZMAT mitigation plan addressing:	6.6				
	asbestos					
	dust					
	noise					
	storage					
	usage					
	removal					
	disposal					
34	Establish the JAI Team	8.2.1				
35	Review integration phase test plans:	9.1				
	OT&E/Integration test plan					
	OT&E/Operational test plan					
36	Finalize delivery schedule for project hardware	11.2				
37	Review the contractor site survey to verify the following items:	13.2.2				
	number of single operator and split positions					
	number and type of Telco circuits					
	other G/G circuits					
	number and configurations of A/G frequencies to be connected to CTAS					
	assignment of circuits and frequencies to positions					
	assignment of special features to positions					
	identification of reserve power system requirements					
	number of headsets, handsets, and microphones required					
	layout information, including:					
	location reserved for CTAS equipment					
	power					
	grounding					
	communications line interfaces					
	cable routing					
38	Review floor space requirements:	6.8				
	Telco room requirements					
	supervisory position requirements					
	TRACON console requirements					
	Tower console requirements					
	maintenance terminal requirements					
	raised floor requirements					

Activity Number	Activity		WBS Ref	Responsible Organization	Labor Category	Time to Complete	Comments
		alarm system					
		water system					
		halon system					
		floor, ceiling, and wall penetrations					
49	Identify additional utility requirements to support CTAS:		6.9				
		portable power					
		trash removal					
		hazmat removal					
		hazmat storage					
		temporary lighting					
		temporary fencing					
50	Prepare Configuration Control Decisions (CCD's)		12.5				
51	Provide updated site drawings and documents to the CTAS contractor:		6.9				
		floor plan layouts					
		facility blueprints					
		grounding/bonding locations					
		surveys					
		antenna locations					
		shielding requirements					
52	Complete facility electronic modifications		5				
53	Complete physical facility modifications		6.9				
54	Finalize training course attendees with AML-700:		10.1				
		Orientation					
		AT Operator/Supervisor					
		Hardware Maintenance					
		Engineering Support Services					
55	Develop installation team kickoff agenda:		13.1				
		security passes/badges					
		parking					
		number and type of vehicles					
		special driver training requirements					
		transfer, loading, and unloading requirements					
		contractor clearance list w/SSN's etc.					
		work day					
		in house contact list					
		training schedule					
		issue resolution & tracking					

Activity Number	Activity	WBS Ref	Responsible Organization	Labor Category	Time to Complete	Comments
56	Coordinate availability of CTAS training courses with ALM-700:	8.3.2				
	Orientation					
	AT Operator/Supervisor					
	Hardware Maintenance					
	Engineering Support Services					
57	Identify LOAs and MOAs required or needing modification	12				
58	Identify CTAS contractor P.O.C. for installation activities	12.2				
59	Determine support equipment prior to delivery	13.2.3.1.1				
	vehicle turning radius requirements					
	special weight considerations					
	staging area requirements					
	temporary shelter					
60	Finalize HAZMAT mitigation plan	6.6				
61	Review HAZMAT plan with installation contractor	6.6				
62	Revise cost estimates based on results of EDDA and Site assessment if required	7.1				
63	Make decision whether to pursue HAZMAT Phase 2 assessment	6.1				
64	Identify HAZMAT/Environmental coordinator	8.2				
65	Establish HAZMAT mitigation plan based on Site Assessment results	6.6				
66	Obtain Asbestos Permits	6.9				
67	Identify equipment requirements for HAZMAT Removal	6.6				
68	Develop an Asbestos Operations and Maintenance Plan if required	6.6				

Activity Number	Activity		WBS Ref	Responsible Organization	Labor Category	Time to Complete	Comments
69	Identify Telecommunications Service Requests (TSR)		10				
	Submit TSRs						
70	Review contractor's site survey report for completeness and		13.2.2				
	accuracy of following items:						
		floor space and floor loading to accommodate new equipment					
		heating, air conditioning, humidity, and environmental requirements					
		electrical power, outlets, and lighting requirements					
		line circuits and interface requirements					
		storage, work area, and telephone requirements					
		location of failure alarms					
		coordination of site security requirements					
		identification of special site conditions for FAA, Telco, OCC, etc.					
		location and emplacement of demarcs					
		cabling and runways for power and communications circuits					
		plant-in-place (emplacement) floor plans or drawings					
		special cable harnesses required to interconnect equipment					
		facility modifications or construction requirements					
		work hour restrictions					
		conflicts with CTAS specification or SOW					
		installation materials list					
		adequacy of single point grounding					
		loading zone, dock, and ramp location					
		and ability to accommodate delivery equipment					
		requirements for dollies, trollies, or forklifts					
		corridor, doorway, and equipment room clearances					
71	Ensure complete site preparation activities by ensuring/providing:		13.2.2.3				
		material shortfalls determined based on review of CTAS PML					
		removal of existing equipment					
		necessary floor space for installation					
		individual AC power distribution panel solely for CTAS					
		DC power supplies for local radio control/telephone circuit ringdown					
		adequate electrical grounding as defined by CTAS specification					
		signal ground plate and chassis ground plate					
		Telco installation of suitable signal grounds for incoming Telco circuits					
		adequate primary lightning protection for facility and external lines					

Activity Number	Activity	WBS Ref	Responsible Organization	Labor Category	Time to Complete	Comments
	all communication circuits meet CTAS transmission plan requirements					
72	Coordinate purchase of new Operational Support Telephone System	13.2.7.1.1				
	INCO PHASE					
73	Update cost estimate for AF and AT personnel providing *project specific support*	7.1				
74	Identify funding requirements to complete INCO phase tasks.	7				
75	Establish Facilities Reference Data File (FRDF) for CTAS	5				
76	Coordinate date and time of equipment delivery with contractor	13.2.3				
77	Ensure FAA and contractor site survey activities are completed	13.2.3				
78	Arrange off-loading of CTAS material and equipment	13.2.3				
79	Arrange parking for installation team vehicles	13.2.3				
80	Ensure equipment can be moved directly to installation area	13.2.3				
81	Arrange for temporary storage space (if required)	13.2.3				
82	Identify delivery routes within facility	13.2.3				
83	Ensure access to installation team members					
84	Ensure connectivity of on-site Telco hardware & software to government Demarc frame	6.1				
85	Update AT personnel certifications for new equipment & software	4.2				
86	Update AT operational procedures for new equipment & software	4.2				
87	Update AF personnel certifications for new equipment	3.2				

Activity Number	Activity	WBS Ref	Responsible Organization	Labor Category	Time to Complete	Comments
88	Update AF facility certification procedures	3.2				
89	Update facility maintenance operating procedures for project hardware	3.1.2				
90	Identify the CAI procedures for the project	13.2.3				
91	Review the JAI procedures (FAA Order 6020.2, 6030.45)	13.2.5				
92	Develop CAI Plan	13.2.3				
93	Coordinate CAI Plan with sector & site personnel	13.2.3				
94	Review site installation plan with installation team	13.2.3				
95	Oversee hardware installation in "Stand Alone" configuration	13.2.3				
96	Review and approve contractor site acceptance test plans and proceudure	13.2.3				
97	Oversee Site Acceptance Test in "Stand Alone" configuration	13.2.3				
98	Generate testing discrepancy list	9.5				
99	Issue preliminary test report	9.5				
100	Close test discrepancies	9.5				
101	Issue final test report	9.5				
102	Conduct the contractor acceptance inspection (CAI)	13.2.3				
103	Update FRDF	5				
104	Clear CAI discrepancies	13.2.3				
105	Complete CAI	13.2.3				
106	Properly dispose of any generated hazardous materials	6.6				

Activity Number	Activity	WBS Ref	Responsible Organization	Labor Category	Time to Complete	Comments
107	Begin the Material Safety Data Sheet File	6.6				
108	Review Completion of Personnel Certifications	3.2				
	Operator Maintenance					
	Safety Maintenance (CPR)					
	Asbestos					
109	Investigate recycling opportunities	6.6				
	INTEGRATION PHASE					
110	Update cost estimate for AF and AT personnel providing	7				
	project specific support					
111	Close out any outstanding contractor acceptance inspection	13.2.3				
	(CAI) discrepancies.					
112	Identify field shakedown phase testing personnel	9.4				
113	Conduct OT&E/Integration testing (as required)	13.2.4				
114	Develop Field Shakedown testing plan	13.2.4				
115	Analyze OT&E/Integration testing results	13.2.4				
116	Generate OT&E/Integration trouble reports	9.5				
117	Clear OT&E/Integration trouble reports	9.5				
118	Develop preliminary OT&E/Integration testing reports	13.2.4				
119	Prepare final OT&E/Integration testing report	13.2.4				
120	Conduct OT&E/Operational testing (as required)	13.2.4				
121	Develop Field Shakedown testing plan	13.2.4				
122	Analyze OT&E/Operational testing results	13.2.4				
123	Generate OT&E/Operational trouble reports	9.5				
124	Clear OT&E/Operational trouble reports	9.5				
125	Develop preliminary OT&E/Operational testing reports	13.2.4				

Activity Number	Activity	WBS Ref	Responsible Organization	Labor Category	Time to Complete	Comments
126	Prepare final OT&E/Operational testing report	13.2.4				
127	*Declare Initial Operating Capability (IOC)*	13.2.4				
	FIELD SHAKEDOWN PHASE					
128	Review funding requirements to complete Field Shakedown Phase tasks	7				
129	Conduct Field Shakedown testing	13.2.5				
130	Analyze Field Shakedown testing results	13.2.5				
131	Generate Field Shakedown trouble reports	13.2.5				
132	Clear Field Shakedown trouble reports	13.2.5				
133	Prepare final Field Shakedown testing report	13.2.5				
134	Update GSIP and SIP schedules	11				
135	Identify funding requirements to complete dual OPS Phase GSIP tasks.	7				
	DUAL OPS PHASE					
136	Identify equipment removal personnel	8				
137	If Admin telephones are integrated with operational voice switching equipment, receive, install, and test new ATS (OSTS)	13.2.7				
	EQUIPMENT REMOVAL PHASE					
138	Remove replaced voice switch and associated equipment	13.2.7				
139	Remove HAZMAT items	6.6				

Activity Number	Activity	WBS Ref	Responsible Organization	Labor Category	Time to Complete	Comments
140	Remove Debris	6.6				
141	Refurbish spaces	6.9				
142	Ensure facility drawings developed by contractor reflect	6				

APPENDIX B: TRANSITION INFORMATION EXCHANGE (TIE) SUMMARY REPORT

(This is a sample TIE Report which will be developed by the IMT with Field input & included in the next PIP update.)

Issue No.	Issue Synopsis	Action Plan Synopsis	Actionee	Suspense Date	Status
94-001					
94-002					
94-003					
94-004					
94-005					
94-006					
94-007					
94-008					
94-009					
94-010					
94-011					
94-012					
94-013					
94-014					
94-015					
94-016					
94-017					
94-018					
94-019					
94-020					
94-021					
94-022					
94-023					
94-024					
94-025					
94-026					
94-027					
94-028					
94-029					
94-030					

Appendix C: Definition of Terms

Acquisition Phase: The period of time following a key decision point when specific activities are conducted to achieve acquisition objectives.

Associate Program Manager (APM): Members of the Program Management Team (PMT), including matrixed support personnel, with designated responsibilities to support the Program Manager in managing the acquisition program.

Associate Program Manager for NAS Implementation (APMNI): A member of a Program Manager's matrix support team assigned by the ANS Platform Manager to help plan and coordinate program implementation and transition activities and to serve as an information bridge between Headquarters and Regional and field activities.

Commissioning: The formal placement of equipment or a facility into operational service or use.

Configuration Management: A discipline applying technical and administrative direction and surveillance to: (a) identify and document the functional and physical characteristics of a configuration item; (b) control changes to those characteristics; (c) record and report change processing and implementation status, and (d) audit documentation and configuration items to ensure adequacy of the baseline being established.

Contract Data Requirements List (CDRL): A list of data requirements that the contractor will be obligated to deliver under the contract, with the exception of data specifically required by standard Federal Acquisition Regulation (FAR) clauses. Items in this list are commonly referred to as "deliverables".

Contractor Acceptance Inspection (CAI): Formal acceptance by the FAA of a constructed facility from the construction contractor, or an installed system or equipment item from the installation contractor.

Decommissioning: The formal process of removing equipment or a facility from operational use or service.

Deployment: The fielding and placement of equipment and systems into NAS operations.

Deployment Readiness Review (DRR): The formal process of management review by concerned organizations to ensure that a program is ready to be deployed and ensuring that the infrastructure is prepared to accept, operate, and support the deployed program throughout its life cycle.

Dual Operations Phase: The period of time during site implementation when a facility's prime mission is performed from two locations (same or separate facilities), conducted during a period following installation of new equipment or system capabilities.

Essential Elements of Information: The eleven essential elements of information required by FAA Order 1810.1F to be addressed in the Program Implementation Plan (PIP) are: (1) AF Operations; (2) AT Operations; (3) System Configuration and Engineering; (4) Physical Facilities; (5) Financial Resources; (6) Human Resources; (7) Test and Evaluation; (8) Implementation; (9) System Support; (10) Schedule; and (11) Administration.

Equipment Removal Phase: The period associated with site implementation following commissioning of a new system when replaced equipment is removed.

Human Factors: A discipline which involves analyses, specification of requirements, and conduct of design/development tasks focused on the cognitive, perceptual, and motor responses of system operators and maintainers.

Human Resources: The personnel, whether employees or contracted services, available to perform the tasks associated with carrying out a mission or objective.

Implementation: Those activities necessary to deploy and support the products of a single program into a facility or field environment.

Implementation Issues: A problem, conflict, or incompatibility with existing constraints that could have a negative impact on the deployment of a program or product.

Implementation Management Team (IMT): A team established by the Associate Program Manager for NAS Implementation (APMNI). The IMT consists of the APMNI, representative regional transition and implementation personnel (ex: RAPMs) and other matrix resources and the program's Associate Program Managers. The IMT supports the Program Manager (PM) by developing and updating the PIP, developing the implementation aspects of procurement packages, and coordinating activities associated with program deployment and support.

Implementation Requirement: Conditions, procedures, or capabilities that must be in place for implementation of a program or product to be completed.

Initial Operational Capability: That point when equipment hardware and software installation and testing have been completed and meet defined requirements. The IOC should be considered a partial JAI where the maintenance responsibility is accepted by the FAA, but a period of time is set aside for verification of operational procedures along with training and familiarization.

Installation: The physical placement of equipment, including attachments, software, and electrical/electronic connections required for proper operation.

Installation and Checkout Phase: The period of time during site implementation in which equipment is received, installed, and integrated with other operational systems.

Interface: The physical and logical means of providing interaction between two or more systems, facilities, or organizations.

Joint Acceptance Inspection (JAI): A formal process conducted by Facility and Equipment (F&E) personnel, in conjunction with Airway Facility and Air Traffic operations representatives, that results in a consensus that criteria have been met to permit formal commissioning of a facility or subsystem.

Key Decision Point (KDP): A point in time when an acquisition comes before the cognizant acquisition executive for approval to proceed to the next acquisition phase.

Management By Exception: A management concept in which a manager intervenes or acts only when issues or problems are elevated to their attention.

Mission Need: A statement of operational capability required to perform an assigned mission or to correct a deficiency in existing capability to perform the mission.

Mission Need Statement (MNS): A document with defined format and contents that identifies shortfalls in existing operational capability and needed capabilities to perform the mission. Approval of the initial MNS constitutes the first key decision point in the acquisition process.

NAS Change Proposal (NCP): A formal process for baselining and proposing changes to baselined NAS configuration items.

National Airspace System (NAS): The facilities, equipment, regulations, procedures, and personnel that support the safe and efficient movement of all aircraft in U.S. controlled airspace.

Operational Requirements Document (ORD): A top-level management document that defines the critical mission performance characteristics of an acquisition program. The ORD serves as the basis for the acquisition program baseline and system specification.

Operations and Maintenance Phase: That phase following site implementation when a new system capability has become an operational part of the NAS and normal ongoing operations of the facility is sustained.

Personnel Certification: Personnel certification is a two-phase process consisting of a certification authority phase and a responsibility assignment phase. Certification authority requires FAA technical personnel to demonstrate knowledge of the theory of operations and the ability to apply this knowledge. Certification responsibility is the official assignment to FAA technical personnel to use their authority to certify a specific service/system/subsystem/equipment in the NAS.

Physical Facilities Element: Those aspects of program implementation associated with assessing facility constraints, verifying suitability of system designs in relation to facility configurations and preparing the facility for acceptance of a new system.

Platform: A basic type of NAS facility that hosts the systems and subsystems necessary to perform an essential air traffic control function. The three types of Platforms currently defined are: Air Route Control Center (ARTCC), Airport Traffic Control Tower/Terminal Radar Control (ATCT/TRACON), and General NAS (GNAS) facilities.

Platform Manager (PLM): The designated manager within the NAS Transition and Implementation Service (ANS), who serves as the headquarters advocate for the field regarding implementation and transition matters involving the platform. The PLM has authority and responsibility to resolve multiple program transition and integration issues.

Pre-Installation and Checkout (PRE-INCO): The period of time during site implementation when the facility is prepared to receive program materiel.

Program Implementation Plan (PIP): A planning document that provides essential elements of information for implementation to all levels of the FAA with responsibility for implementing a program. The scope of the PIP is from program inception through commissioning. It is an iterative document that is updated as program information matures.

Program Manager (PM): The official responsible for managing an acquisition program.

Program Management Team (PMT): The team of Associate Program Managers (APMs) established by the Program Manager (PM) to perform delegated responsibilities for the management of an acquisition program.

Program Trouble Report (PTR): Formal documentation of a discrepancy between the actual performance of equipment or subsystems and specified performance requirements.

Regional Associate Program Manager (RAPM): The primary regional interface for the Program Manager (PM), Platform Manager (PLM) and Associate Program Manager for NAS Implementation (APMNI) for an acquisition program. The RAPM represents Airway Facilities field divisions on matters of program status, cost, schedule, and performance, and coordinates with field, regional and headquarters offices on technical and operational matters that may impact assigned programs.

Risk: A subjective assessment made regarding the likelihood of achieving an objective within a specified time and within the resources provided.

Site: A facility at a particular location.

Site Implementation Plan (SIP): A planning document developed by a contractor or site personnel based on information contained in a Program Implementation Plan (PIP). The SIP defines the process to be employed in implementing a program within a site with a typical or representative configuration.

Subsystem: Any system that is part of a larger system; component of a system. In context of the NAS, a subsystem is synonymous with "program" or "project."

System: Hardware or software that performs a function or set of functions.

System Certification: Periodic verification and validation that the advertised quality and scope of services, and the capability of providing those services, are being provided to the users.

System Integration Phase: That period of time during site implementation when new equipment is connected to the operational system and tests are conducted to verify the performance of system interfaces.

System Shakedown Phase: That period of time during site implementation when new system capabilities are assessed in the operational environment under carefully controlled conditions.

System Support Element: Those aspects of program implementation associated with assuring development of maintenance plans, policy and procedures, new equipment training, documentation and field and supply support.

Test and Evaluation Element: Those aspects of program implementation associated with planning and conducting the test program to verify that the system meets technical and operational performance specifications.

Transition: The aggregate of implementation activities of multiple programs destined for deployment to a region, facility, or platform environment.

Transition Information Exchange (TIE): The process conducted by the Associate Program Manager for NAS Implementation (APMNI) to identify and resolve program implementation and transition issues. A TIE is conducted during each acquisition program phase and is a criterion for exit to the next phase. The TIE begins with dissemination of the PIP to appropriate regional, sector/hub, and facility personnel for review and assessment. Issues identified as a result of the field review are raised and resolved through normal channels at the lowest level of management attention as possible.

Transition Issue: A conflict or incompatibility between two or more programs destined for implementation in a facility which, if not resolved, will have a negative impact on the implementation of one or more programs.

Transitory State: The period of time at a site from Pre-INCO through Equipment Removal.

Appendix D: ACRONYMS & ABBREVIATIONS

ADU	ARTS Data Unit
AERA	Automated En Route Air Traffic Control
AOP	NAS Operations Service
AOS	Operational Support Service
APML	Associate Program Manager for Logistics
APMNI	Associate Program Manager for NAS Implementation
APMO	Associate Program Manager for Operations
APMR	Associate Program Manager for Requirements
APMT	Associate Program Manager for Testing
ARTCC	Air Route Traffic Control Center
ARTS	Automated Radar Terminal System
ASE	System Engineering Service
ASP	Arrival Sequencing Program
ATC	Air Traffic Control
ATM	Air Traffic Management
AUS	Automation Specialists
AVA	Adaptation, Validation, and Analysis
CAASD	Center for Advanced Aviation System Development
CAI	Contractor Acceptance Inspection
CCB	Configuration Control Board
CDLS	Contractor Depot Logistics Support
CHI	Computer Human Interface
CI	Configuration Item
CMLS	Contractor Maintenance & Logistics Support
COTS	Commercial Off The Shelf
CPE	CTAS Processing Equipment
CPU	CTAS Processing Unit
CSCI	Computer Software Configuration Item
CSCR	CTAS Software Change Requests
CTAS	Center-TRACON Automation System
CTRB	CTAS Technical Review Board
DA	Descent Advisor
DA	Direct Advisor
DAN	Data Analysis
DCN	Document Change Notice
DFW	Dallas-Fort Worth
DP	Dynamic Planner
DPF	Descent Profile
DRL	Data Requirements List
DRP	Data Recording Playback
DRR	Deployment Readiness Review
DT&E	Development Test and Evaluation
EDP	Expedite Approach Spacing Tool
ETA	Estimated Time of Arrival
ETMS	Enhanced Traffic Management System
F&E	Facilities & Equipment
FAALC	FAA Logistics Center
FAATC	FAA Technical Center
FAATSAT	FAA Telecommunications Satellite
FAST	Final Approach Spacing Tool