COPY 1
CT
83

12 DOT/FAA/PM-83/15
DOT/FAA/CT-83/12

DCLC: 1D3 45200

# Weather Satellite Products in the Flight Service Automation System (FSAS)

FEDERAL AVIATION ADMINISTRATION
JUN 1 1984
TECHNICAL CENTER LIBRARY
ATLANTIC CITY, N.J. 08405

John Henline

Prepared By
FAA Technical Center
Atlantic City Airport, N.J. 08405

May 1984

Final Report

This document is available to the U.S. public through the National Technical Information Service, Springfield, Virginia 22161.

U.S. Department of Transportation
**Federal Aviation Administration**
Program Engineering and Maintenance Service
Washington, D.C. 20590

FAA TECHNICAL CENTER LIBRARY NJ
DOT/FAA/CT-83/12 c1
United State/Weather satellite products
00008635

NOTICE

This document is disseminated under the sponsorship of the Department of Transportation in the interest of information exchange. The United States Government assumes no liability for the contents or use thereof.

The United States Government does not endorse products or manufacturers. Trade or manufacturer's names appear herein solely because they are considered essential to the object of this report.

**Technical Report Documentation Page**

| 1. Report No. | 2. Government Accession No. | 3. Recipient's Catalog No. |
|---|---|---|
| DOT/FAA/PM-83/16 | | |

| 4. Title and Subtitle | 5. Report Date |
|---|---|
| WEATHER SATELLITE PRODUCTS IN THE FLIGHT SERVICE AUTOMATION SYSTEM (FSAS) | May 1984 |
| | 6. Performing Organization Code<br>ACT-100 |
| 7. Author(s) John Henline | 8. Performing Organization Report No.<br>DOT/FAA/CT-83/12 |
| 9. Performing Organization Name and Address<br>Federal Aviation Administration<br>Technical Center<br>Atlantic City Airport, New Jersey 08405 | 10. Work Unit No. (TRAIS) |
| | 11. Contract or Grant No.<br>131-401-860 |
| 12. Sponsoring Agency Name and Address<br>U.S. Department of Transportation<br>Federal Aviation Administration<br>Program Engineering and Maintenance Service<br>Washington, D.C. 20590 | 13. Type of Report and Period Covered<br>Final Report<br>June 1980 - August 1981 |
| | 14. Sponsoring Agency Code |

15. Supplementary Notes

16. Abstract


The activity discussed in this report was conducted to determine the acceptability and operational effectiveness of various techniques for displaying and distributing Weather Satellite Imagery within an Automated Flight Service Station (AFSS) environment. Primary consideration was given to the effectiveness of the displayed data together with the presentation format used for evaluations and demonstrations. Second, man-machine relationships and some hardware/software aspects were tested and evaluated in both field and laboratory environments.

Results from all project activity indicated that the techniques and systems studied provided graphic data in a form suitable for use by preflight, in-flight, and en route flight advisory specialists for nearly all their briefing functions. The concept of electronic displayed data utilizing the test-bed assembled for project activity proved reliable and acceptable (though not optimal) by the specialists participating in the three evaluation phases. Conditional acceptability was found in display medium and size, graphical quality and information presentation, and for the associated software programs for accessing the data through the test-bed installations. Additionally, the animation (i.e., movie looping) was the most desired feature of the test-bed system.


| 17. Key Words | 18. Distribution Statement |
|---|---|
| Satellite Imagery<br>GOES | This document is available to the U.S. public through the National Technical Information Service, Springfield, Virginia 22161 |

| 19. Security Classif. (of this report) | 20. Security Classif. (of this page) | 21. No. of Pages | 22. Price |
|---|---|---|---|
| Unclassified | Unclassified | 70 | |

Form DOT F 1700.7 (8-72) Reproduction of completed page authorized

# PREFACE

Numerous organizations and individuals participated in the GOES Display Test-Bed Demonstration and Evaluation conducted at the Federal Aviation Administration (FAA) Technical Center, and at the Boston and Seattle Flight Service Stations. Acknowledgement is given to:

The FAA's New England and Northwest Regions for their commitment to the Flight Service Station (FSS) Modernization/Automation Program by supporting the Boston and Seattle FSS's participation in this study.

Herb Anderson, Chief of the Boston FSS, Dean Lane, Chief of the Seattle FSS, and their respective staffs, for hosting and supporting the field demonstration and FSS Specialist evaluation efforts.

Dave Mark, FSS Specialist, Millville Flight Service Station, for his unwavering support during the preparation phase of this and other project documentations.

TABLE OF CONTENTS


| | Page |
|---|---|
| EXECUTIVE SUMMARY | viii |
| INTRODUCTION | 1 |
| Purpose | 1 |
| Background | 1 |
| GOES System Description | 2 |
| TECHNICAL APPROACH | 8 |
| Discussion | 8 |
| Data Collection | 11 |
| Data Analysis | 11 |
| TABULATION OF STUDY RESULTS | 16 |
| RETROSPECT | 17 |
| SUMMARY OF RESULTS | 18 |
| TEST-BED DESIGN/EVALUATION | 19 |
| System Description of Prototype Test-bed | 19 |
| EVALUATION OF THE GDDS "STAND ALONE" CONCEPT | 21 |
| Positive Aspects | 21 |
| Negative Aspects | 22 |
| Alternative Approaches | 23 |
| Advanced Concepts | 26 |
| CONCLUSIONS | 28 |
| RECOMMENDATIONS | 30 |
| APPENDIXES | |

A — GOES System Evaluation Questionnaire
B — Responses from the GOES System Evaluation Questionnaire
C — GOES System Final Interview Questionnaire
D — Responses to the GOES System Final Interview Questionnaire
E — Summary of Interview and Questionnaire Responses
F — Recommendations Based on Specialists Interviews

## LIST OF ILLUSTRATIONS


| Figure | | Page |
|---|---|---|
| 1 | GOES SAT-WX Image Depicting Mountain Wave and Jet Stream Locations | 5 |
| 2 | GOES SAT-WX Image Depicting Mountain Wave Activity | 6 |
| 3 | GOES SAT-WX Image Depicting Jet Stream Location | 7 |
| 4 | GOES SAT-WX Image Depicting Sea Breeze Front Activity | 9 |
| 5 | GOES SAT-WX Image Depicting Converging Lines of Thunderstorms | 10 |
| 6 | SAT-WX Receiver/Display System | 12 |
| 7 | Seattle FSS Test-Bed Installation | 12 |
| 8 | GOES System Specialist Opinion Survey Form | 13 |
| 9 | GOES System Evaluation Questionnaire | 14 |
| 10 | GOES System Final Interview Questionnaire | 15 |
| 11 | Summary of Survey Responses | 17 |
| 12 | FSAS Information Flowchart | 24 |
| 13 | Stand-Alone System Profile | 25 |
| 14 | SAT-WX Image Distribution/Display System — Advanced Concept | 27 |


## LIST OF TABLES


| Table | | Page |
|---|---|---|
| 1 | Tabulation of Responses by Test Site Location (8 Sheets) | 31 |
| 2 | Results of Student's "t" Test (2 Sheets) | 39 |
| 3 | Results of Kolmogorov-Smirnov Test (2 Sheets) | 41 |
| 4 | Results of Analysis of Variance | 43 |
| 5 | Results of Newman-Kuels Test (2 Sheets) | 44 |

## LIST OF ACRONYMS

| | |
|---|---|
| ARTCC | Air Route Traffic Control Center |
| AWP | Aviation Weather Processor |
| BOS | Boston FSS |
| CCTV | Closed Circuit Television |
| CDA | Command Data Acquisition Station |
| CDDF | Central Data Distribution Facility |
| COM-SAT | Communications Satellite |
| CRT | Cathode Ray Tube (Electronic Display) |
| CWSU | Center Weather Service Unit |
| EFAS | En Route Flight Advisory Service |
| FPL | Full Performance Level |
| FSAS | Flight Service Automation System |
| FSDPS | Flight Service Data Processing System |
| FSS | Flight Service Station |
| FSSL | Flight Service Station Laboratory |
| GDDS | GOES Distribution Display System |
| GOES | Geostationary Operational Environmental Satellite |
| IFR | Instrument Flight Rules |
| IR | Infrared |
| KM | Kilometers |
| mb | Millibar |
| m.s.l. | Mean Sea Level |
| MVFR | Marginal Visual Flight Rules |
| NAS | National Airspace System |
| NESS | National Environmental Satellite Service |
| nmi | Nautical Miles |
| NWS | National Weather Service |
| PIREP's | Pilot Reports (U.S.) |
| RAREP's | Radar Weather Reports (NWS) |
| SEA | Seattle FSS |
| SFSS | Satellite Field Service Station |
| SMS | Scientific Meteorology Satellite |
| VFR | Visual Flight Rules |
| VI | Visible |
| VISSR | Visible and Infrared Spin Scan Radiometer |
| WSFO | Weather Service Forecast Office |

## EXECUTIVE SUMMARY

This report presents an evaluation of the operational effectiveness and Flight Service Station (FSS) specialist/user acceptability of various techniques and methods used for the distribution, storage, and display of weather satellite weather pictorial products in the Model 2 Automated Flight Service Station (AFSS) environment. Project and air traffic requirements include the test and evaluation of currently available data, presentation methods, operational procedures, and system configurations. In accomplishing these objectives, the question of video display cathode-ray tube (CRT) versus hardcopy of weather products was addressed. Additionally, the CRT display with enhancements to demonstrate its suitability as a tool in the FSS briefing function was investigated.

In the report analysis, prime consideration was given to the effectiveness of the displayed data together with the presentation format used for evaluations and demonstrations. In addition, some man-machine relationships and certain computer link aspects were tested and evaluated in both laboratory and field environments.

Results of the in-house laboratory evaluation clearly demonstrated the preference for and complete adequacy of the CRT display of satellite images over that of contemporary hardcopy on laser facsimile devices. The field evaluation phase verified that the techniques and systems studied provided graphic data in a form suitable for use by preflight, in-flight, and en route flight advisory specialists for nearly all essential elements required in the dissemination of weather briefing duties. Interview results among the three groups showed unanimity in the selection of the system animation capability as the most valuable and useful feature of the test-bed installation. Additionally, digitally enhanced infrared images were preferred together with the capability to project these images at medium speed, slow speed, and individually (step feature); the speed depending on the specialist's current requirements.

Results further showed that the concept of electronic displayed data utilizing the experimental test-bed assembled for project activity proved reliable and acceptable, but not optimal, by the specialist participating in the laboratory and field test phases of this evaluation. In addition, conditional acceptability was found in display medium and size, graphical quality and information presentation, and, finally, for the the associated software programs for accessing the data through the test-bed installation.

It was concluded that the proposed Satellite Weather Image Display System is a more effective tool than the current Laserfax Hardcopy System. Furthermore, the test-bed system would be even more effective when augmented by other information and products for overall briefing effectiveness.

It is recommended that future project activity include an alternative system feasibility cost analysis study to assess the merits of a "stand alone" system and satellite data links, in lieu of telephone land lines and computer data links as proposed in the Flight Service Automation System (FSAS) specifications.

# INTRODUCTION

## PURPOSE.

The purpose of this project was to evaluate and demonstrate various methods and techniques for the distribution and display of Geostationary Operational Environmental Satellite (GOES) Weather Satellite Imagery Products in an Automated Flight Service Station (AFSS) operational environment. Additionally, certain system augmentations (i.e., animation, overlaying, zooming, and colorization) were assessed for possible inclusion into a viable system design.

This report addresses satellite products, distribution and display techniques, and alternative approaches to integrating Satellite Imagery Products into the graphics package of the Model II Flight Service Automation System (FSAS) specifications.

## BACKGROUND.

Historically, one of the shortcomings frequently mentioned by aviation users has been the unavailability of near-term (or real-time) aviation weather. The Federal Aviation Administration (FAA) is also concerned since many accidents/incidents are traceable to this inability to disseminate more meaningful weather information to pilots and other users of the National Airspace System (NAS). For this reason, the FAA has commenced an extensive modernization program to improve procedures and equipment needed to meet the requirements of its weather oriented operations and services. Specifically, the FSAS Program will provide improvements in the methods by which meteorological information is displayed to the Flight Service Station (FSS) specialist. This information will, under the automation program, be computer processed with only pertinent weather data displayed to the specialist.

This technique will save the specialist the time formerly required to organize weather information necessary for the conduct of a preflight briefing. However, the specialist will still need to know the overall weather trend and resulting revelance in order to better understand and interpret the displayed information and relate this to the pilot's needs.

The present system has some shortcomings with respect to volume and timeliness of available weather information and, in addition, the capability to expeditiously take and disseminate data which are operationally significant. Noncurrent information detracts from the specialists's ability to respond pertinently and effectively to requests. This shortcoming can and does impact the safety and efficiency of aviation operations. Some major changes have already been implemented by the FAA which better enable FSS specialists to provide this weather information and service. One such change has been the addition of En Route Flight Advisory Service (EFAS) into 42 FSS's. In addition, Weather Satellite Imagery Products have been declared essential as an operational requirement for each respective EFAS Facility.

Much of the weather overlying an FSS preflight area is traceable to conditions existing outside of the continental borders, places where weather observing facilities are either widely scattered or nonexistent (such as over ocean areas). With the advent of the FSAS, there remains the problems of how best to present the specialist with meteorological information for fast and efficient assimilation

and interpretation. That is, how best to present the information so that all specialists can access the data, quickly formulate an overall weather picture in their own minds, and can easily and quickly distinguish significant aviation weather trends to be communicated to pilots.

The automation of the FSS's offers the means to address and develop solutions to these problems. By providing specialists with electronic displays cathode-ray tubes (CRT's), changes to information content and format are more readily accomplished (it is relatively easy to change software to adapt to improved products). Satellite Imagery is one such meteorological product with characteristics that can take advantage of this adaptability, and may be added to the Model II FSAS System to overcome these problems. Satellite Imagery Products can augment other graphical and alphanumerical products because they allow the specialist a quick visualization of weather conditions existing over a large area. Satellite Images provide information about those areas not presently served by the network of National Weather Service (NWS)/FAA observation facilities and for which there is no other factural or reliable source of information for preflight and/or in-flight briefing purposes.

Weather satellite products can be processed and analyzed to obtain quantitative meteorological information of significant importance to both the NAS and NWS users. For example, the visual satellite picture can be processed and the presence of mountain wave patterns analyzed to alert the specialist of areas where turbulence is suspected but unreported by other means except occasional pilot reports (UA's). Since the Satellite Images are updated on a half-hour basis, the information is timely and capable of depicting rapidly changing weather conditions and future trends. These images provide the specialist with information that augments the present ground-based system which report conditions on an hourly basis.

## GOES SYSTEM DESCRIPTION.

The following background discussion describes how Satellite Imagery is received and distributed by the National Environmental Satellite Service (NESS).

There are two geostationary orbiting meteorological satellites positioned over the Equator (0° latitude), one at 75° west longitude (GOES-1) and the second at 135° west longitude (SMS-2), approximately 22,000 miles above the earth's surface. The GOES-1 (East-GOES) Satellite provides coverage of the United States, Canada, and South America. The SMS-2 (West-GOES) satellite provides coverage of the western region of the United States and Canada, Alaska, Hawaii, and the Pacific Ocean. Collectively, these two satellites provide images every 15 minutes. GOES-1 makes an image available on the hour and 30 minutes past each hour; SMS-2 provides images at 15 and 45 minutes past each hour. Visible images are only available during daylight hours, but infrared images are available for the entire 24-hour day.

Both satellites utilize Spin Scan Radiometers to record the visible information and infrared (IR) spectrum employing eight visible lines and one IR line per rotation at 100 rotations per minute (rpm). The scanning radiometers perform 1,821 scanning rotations in approximately 18 minutes to build an image of the earth from north to south. Satellite sensors provide visible data at 0.8 kilometer (km), 0.43 nautical mile (nmi), resolution and infrared data at 8 km, 4.3 nmi, resolution. These resolutions are only realized from a satellite subpoint, and deteriorate as the area being viewed increases in distance from that subpoint. The subpoint being the point on the earth at which a line drawn from the satellite to the center of the earth touches the earth at the equator.

The unprocessed images from each satellite are transmitted to the NESS Earth Receiving Station at Wallops Island, Virginia.

The data are processed by the Command Data Acquisition Station (CDA) utilizing satellite position and attitude. The incoming data are processed, gridded (i.e, the geopolitical boundaries are added to the image), and reduced 16-to-1 for simplification of transmission. Lower resolution IR images are computer formatted for analog transmission direct to the Satellite Field Service Station (SFSS) and Central Data Distribution Facility (CDDF). The CDA processes and retransmits the "stretched" data back to the satellite, which acts as a relay, retransmitting the data on an ommidirectional antenna.

Any potential user may receive the stretched Visible and Infrared Spin Scan Radiometer (VISSR) data (both visible and infrared) and process the digital information to realize products which best meet their individual requirements. NESS, located at Suitland, Maryland, receives the stretched data on the "second bounce" from the satellite and relays the data via microwave link to the World Weather Building in Marlow Heights, Maryland. Here the stretched data are formatted and sectorized into a form suitable for transmission over a C-5 type telephone communications link to the SFSS's. Each SFSS receives standard sectors of visual and infrared coverage of the U.S. with resolutions of 1/2, 1, or 2 nmi and infrared at 4-nmi coverage. In addition, the CDDF can provide sectorized IR imagery with the same geographical coverage and resolution as the visible sector, and has the capability for IR temperature enhancement for emphasis of specified features in the imagery.

These sectors are now available from the SFSS to the subscriber via a dedicated telephone link. Most users utilize a single picture hardcopier device or an electronic display (CRT) with analog disk storage and the ability to sequence through a series of images to obtain time-lapse movie looping.

The primary advantage of obtaining the stretched and gridded digital data relayed by the satellite is the ability to computer-analyze digital formatted data. That is, all bits of encoded images are available without the accumulative degradation losses incurred by a digital/analog conversion of the input signal.

Analysis of the data can be accomplished dynamically as the image is received or after the image has been received and stored. This scheme allows as little or as much processing that conditions might warrant. The processing and analysis may involve anything from "zooming" (sectorizing any desired portion of the image) to complete overlaying schemes, which could include a potpourri of weather/aeronautical graphics, or other data of importance to the FSS specialists and air traffic system users. For example, the digitized image, the satellite IR radiometer calibration, and the radiosonde data could be used to calculate cloud tops in feet mean sea level (m.s.l.). Since all this information is being considered for inclusion in the data base at the Flight Service Data Processing System (FSDPS), this feature could be a routine function, providing timely information currently available only by infrequent pilot reports.

Some other operations demonstrated/evaluated on Satellite Imagery in the Technical Center FSS Laboratory, Boston/Seattle (BOS/SEA) FSS's, and BOS Weather Service Forecast Office (WSFO) are:

1. Animation (time-lapse movie looping) of Satellite Images which enabled the observer to discern weather trends as they are developing, and to display

those trends in a visual manner which do not require any mental gymnastics to understand.

2. Image zoom (sectorization) — this feature allowed the specialist, through preselection of incoming images, to obtain a 3-to-1 enlargement or sectorized portion (window) of that particular image. These data were automatically recorded and immediately available to the specialist via the CRT display for analysis when desired.

One of the major advantages of utilizing the digital data directly from the satellite is the near real-time availability of images. In contrast with the analog transmission method, which requires approximately 26 minutes of processing time by the CDA/CDDF Stations, the digital unprocessed data for the Continental U.S. could be available to the aviation weather processor (AWP)/FSDPS or AFSS as available, and then processed as desired. Thus, the a priority advantage of this concept is more readily apparent, particularly for rapidly changing weather conditions as well as a significant improvement over the half-hour delay between valid time and availability of images from analog transmission.

Although the emphasis of this project was not on satellite products evaluation per se, it is noteworthy to mention that by the skilled interpretation of Satellite Imagery, the FSS specialist can identify meteorological phenomena and conditions not readily apparent or obtainable from conventional briefing materials. The following are a few of the major features that can be used by the FSS specialist to improve briefing quality:

1. Mountain waves indicate areas of turbulence before pilot reports (PIREP's) come in (see GOES Image figures 1 and 2).

2. Show conditions between reporting stations. This is particularly helpful when stations are far apart or when reports are not available, and is especially helpful for overwater use and in the Western U.S. where there are no reporting points to the west.

3. "Black stratus" can indicate areas of possible fog formation before it can be forcasted by other means; it also indicates extent of coverage.

4. Arc clouds indicate position of gust fronts associated with thunderstorms and resulting turbulence along with other conditions which possibly contribute to formation of squall lines.

5. Show fog burning off edges toward centers of large areas of low stratus. This observation aids briefing and trending.

6. Show embedded thunderstorms in large areas of stratus and/or thick haze.

7. Cloud streets indicate winds over 20 knots, and suggests turbulence as well as showing wind direction at lower levels.

8. Helps determine position of the jet stream when other data are not available. This, in turn, indicates possible areas of strongest winds and turbulence. (Figure 3 is one example of how satellite products can be used to locate "jet stream phenomena.")

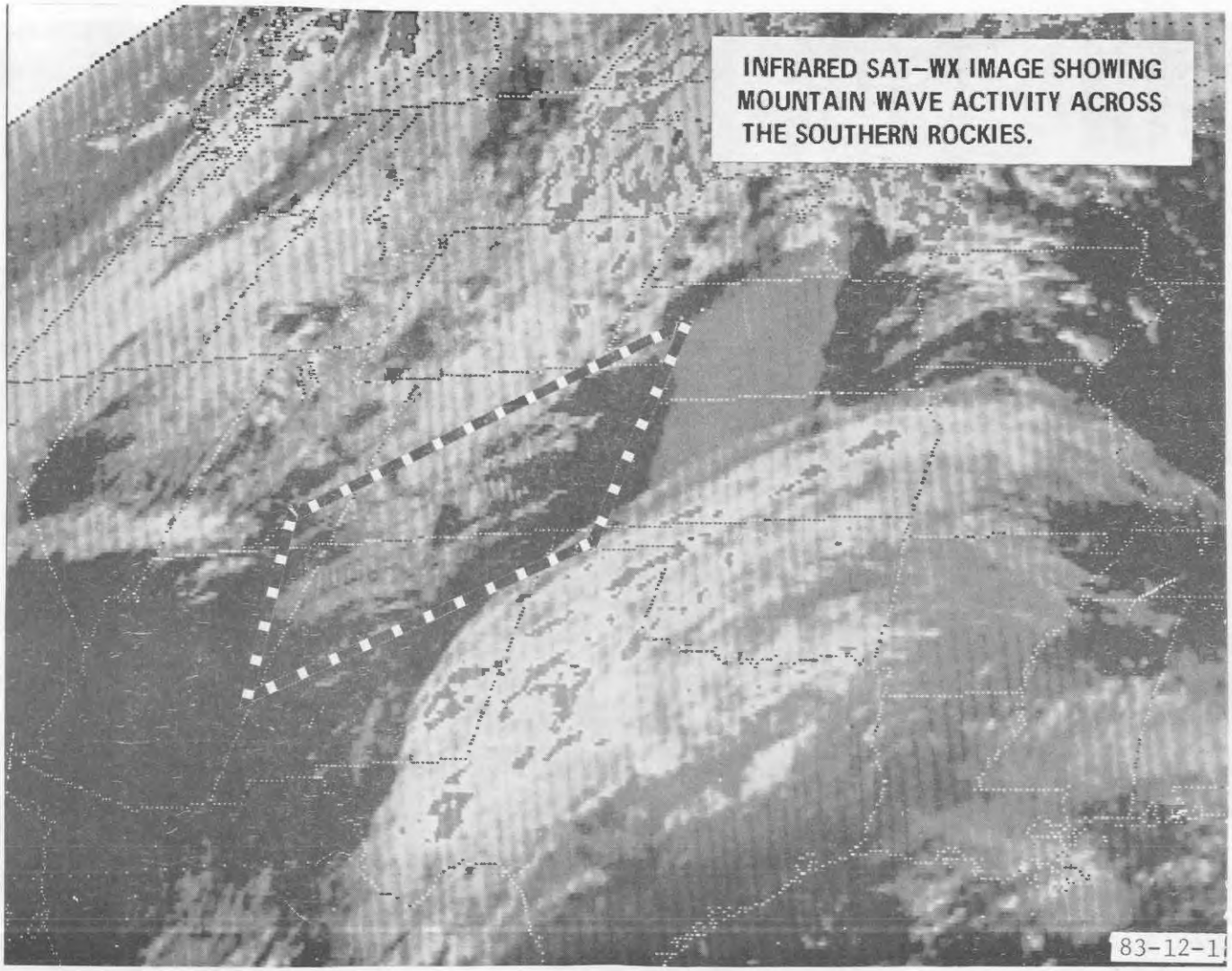


FIGURE 1. GOES SAT-WX IMAGE DEPICTING MOUNTAIN WAVE AND JET STREAM LOCATIONS

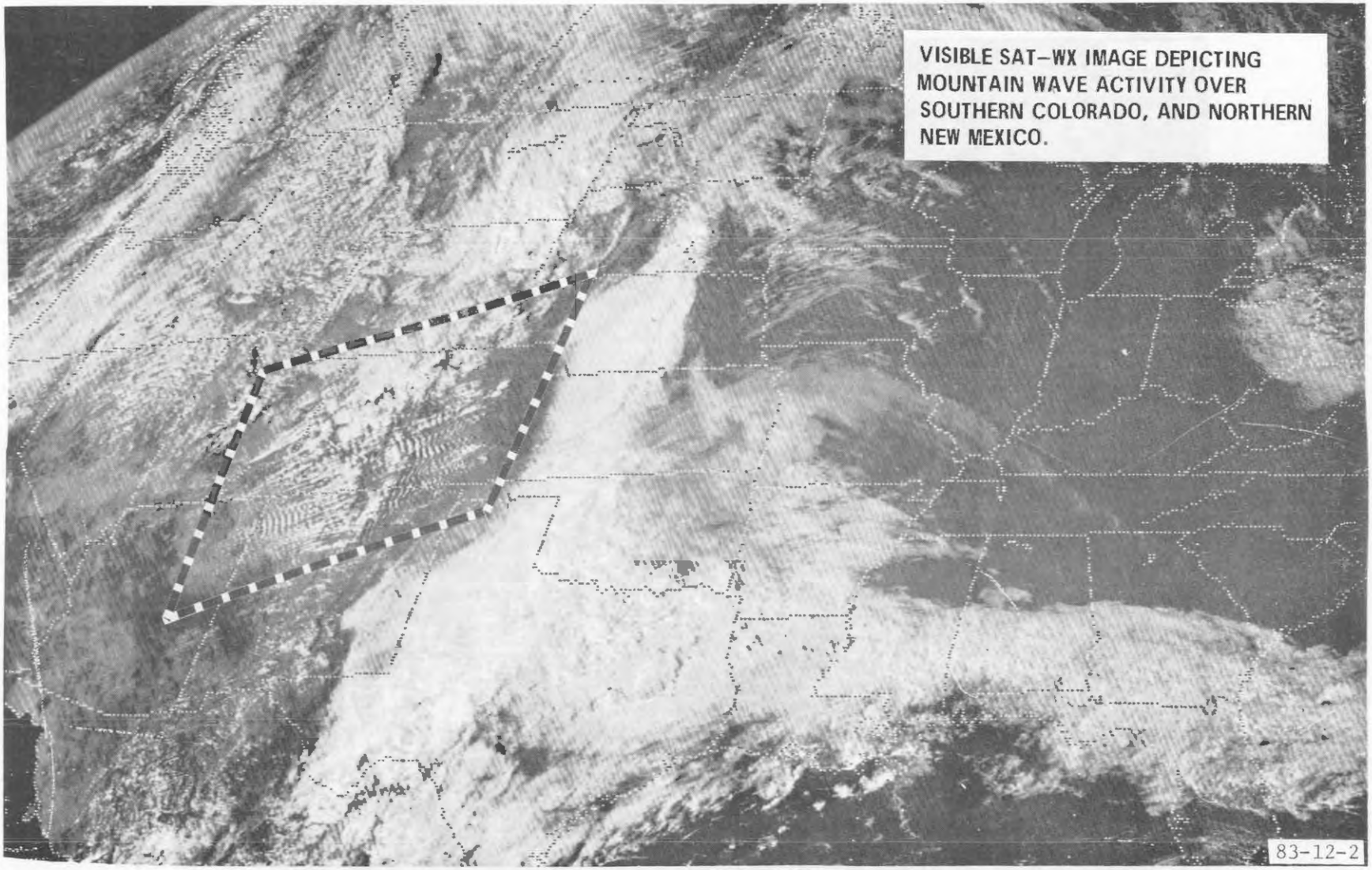


FIGURE 2. GOES SAT-WX IMAGE DEPICTING MOUNTAIN WAVE ACTIVITY

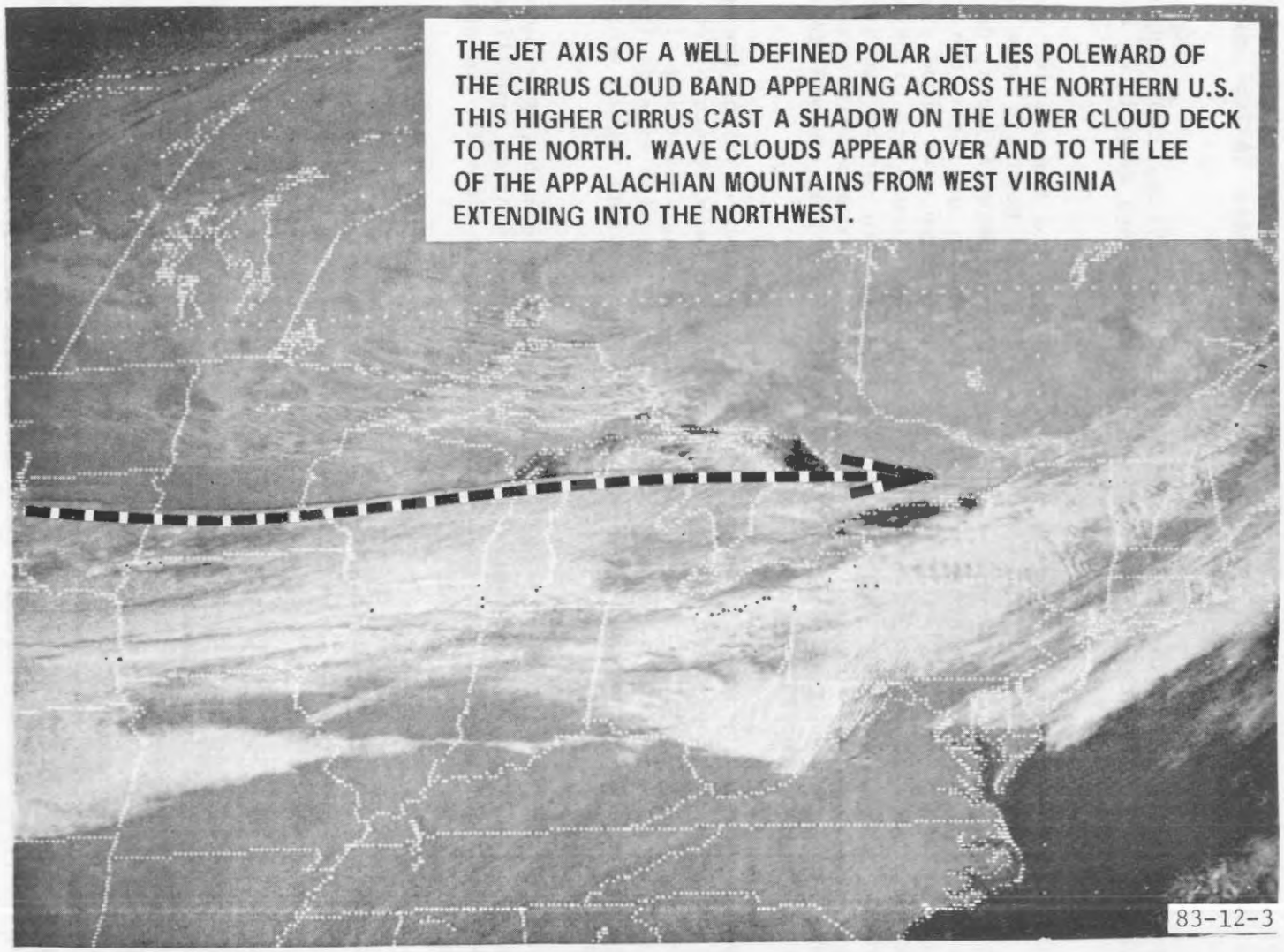


FIGURE 3. GOES SAT-WX IMAGE DEPICTING JET STREAM LOCATION

9. Enhanced IR produces more timely location and movement of thunderstorms and can provide the first indication of unexpected thunderstorm formation before PIREP's or radar weather reports (RAREP's).

10. Anvil cirrus shows direction of thunderstorm formation movement; enhanced IR images of same region also show maximum tops. These are especially useful in the Western U.S. where only Air Route Traffic Control Center (ARTCC) data are available for the Radar Summary Chart.

11. Figure 4 shows the extent of sea breeze front activity, thus enhancing the specialists' ability to relay this kind of information and associated weather to pilots.

Figures 1 and 2 are examples of mountain wave clouds and is a consecutive view of the clouds in both the infrared and visible spectra. The mountain wave clouds exists over and to the east of the Rocky mountains from northeast Arizona, northern New Mexico, as well as south central Colorado. Resolution of these two photographic images is about 1 nmi. The interval between successive wave cloud elements is small and wave crest is very distinguishable. When wave clouds are discernible, areas of potential turbulence associated with the wave pattern can be isolated and appropriate flight warnings issued. Additionally, the cirrus shield, overlying northern Texas and southeast Oklahoma, has an anticyclonically curved edge and depicts the approximate location of a jet stream.

The cloud pattern resulting from a strong sea breeze is apparent along the entire coast of Florida. The cloud free area associated with the sea breeze circulation extends seaward approximately 50 miles. The sea breeze front, consisting of a thin line of clouds, is most evident inland on the east coast, but also extends from the Florida Keys north along the gulf coast and becomes prominent again along the western panhandle coast.

The extensive clear areas off the east and west coasts can be attributed to the sea breeze circulation cell as well as the result of continuing upwelling. It can also be noted that two lines of converging thunderstorm activity are apparent in Mississippi (figure 5).

## TECHNICAL APPROACH

### DISCUSSION.

The overall technical approach of this project was to determine, through a variety of laboratory and field demonstrations, viable satellite imagery distribution and storage and display techniques to meet the requirements of the Model II FSAS Program. Technological constraints required a multiphase approach for accomplishing project objectives and keyed on the establishment of a test environment. Test facilities and equipment were established and assembled in the FSS Laboratory (FSSL) at the FAA Technical Center. The in-house (Phase I) laboratory effort was supported by one of the development computers assigned to that laboratory. The field test bed, which was designed, developed, and fabricated in the Technical Center's FSSL, was controlled through a microprocessor driven keyboard.

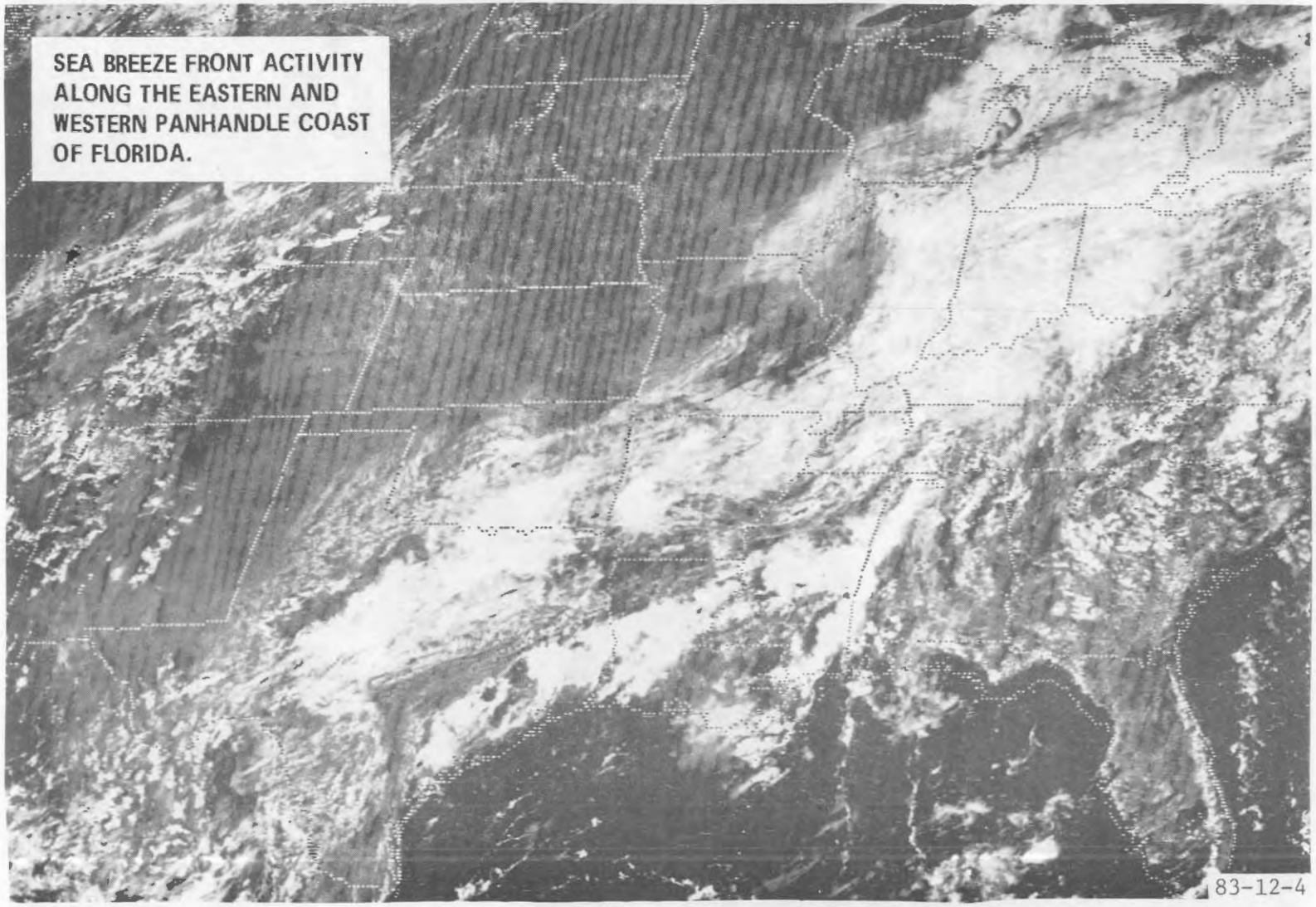


FIGURE 4. GOES SAT-WX IMAGE DEPICTING SEA BREEZE FRONT ACTIVITY

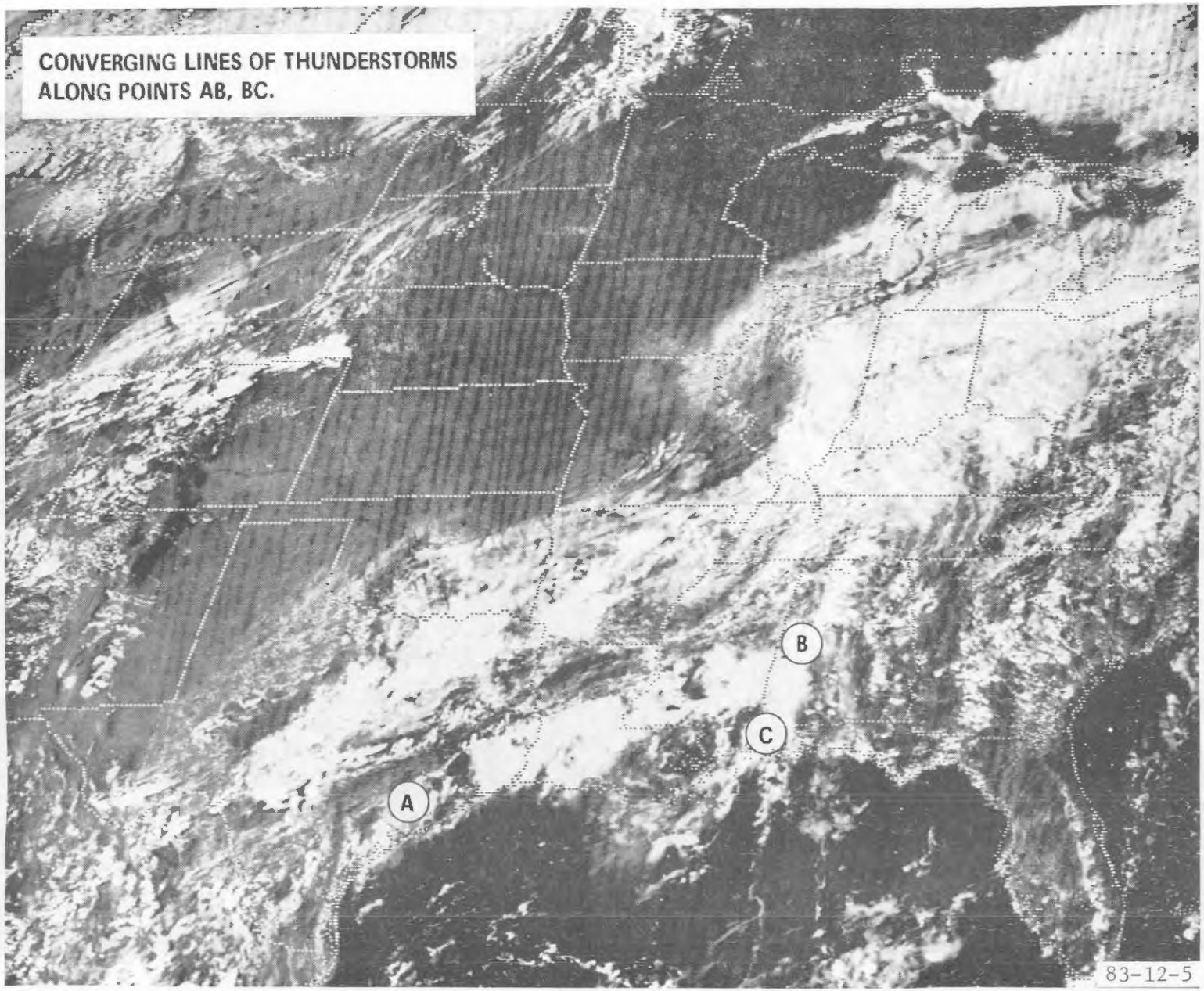


FIGURE 5. GOES SAT-WX IMAGE DEPICTING CONVERGING LINES OF THUNDERSTORMS

Phase I included the assembly and configuration of equipment necessary to demonstrate and evaluate the electronic receipt, display, storage, and distribution of Satellite Imagery. During this phase, full performance level journeymen from field facilities participated in the initial evaluation of a prototype system utilizing a computer controlled data link. These FSS field specialists were actually brought to the Technical Center for other reasons, but the timing was such that the evaluation activities "piggy-backed" nicely.

The Phase II activity required the assembly and configuration of a "stand-alone" satellite products receiver and display system for installation in one or more field test sites. Figures 6 and 7 pictorially display the GOES test-bed equipment as installed at the Seattle FSS Field Site. The equipment is collocated at the In-flight/EFAS position. Figure 6 shows a closeup of the test-bed equipment. On the left is the receiver and disk storage unit. To the right is the CRT display and associated input keyboard.

Before commencing the field test phases the following site selection criteria was established:

1. Sites were appropriately equipped to receive and process Satellite Imagery.

2. Had specialists trained in the interpretation of satellite products.

3. Provided the widest range of conditions (topographical and meteorological) conductive for making qualitative comparisons of concepts and systems.

The final phase of this project involves the continued development of a computer controlled data link and the assessment of certain enhancements for possible inclusion in a product specification.

All participants in local and field tests were surveyed and afforded the opportunity to respond to questionnaires and interviews (figures 8, 9, and 10) so that all reactions to concepts, system design, and evaluations could be statistically analyzed.

DATA COLLECTION.

Data collection efforts associated with each project phase were focused on a qualitative comparison of electronic display versus contemporary techniques. Additionally, information was collected on functional features which the field specialists felt pertinent to describe system requirements and utilization. All raw data were subjected to computer reduction and analysis in the preparation of statistically significant results from in-house and field tests.

DATA ANALYSIS.

To accomplish the statistical analysis, the following integer numerical values were assigned to the five choices in the questionnaire:

1 = Present system is much better
2 = Present system better
3 = No change
4 = Improvement
5 = Vast improvement

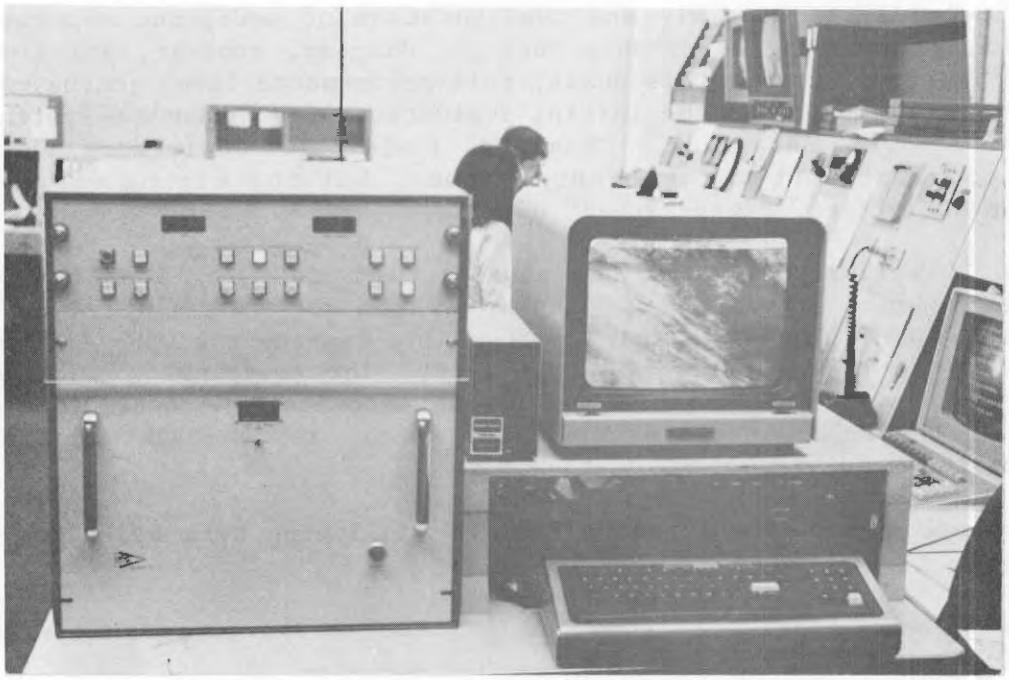

83-12-6

FIGURE 6. SAT-WX RECEIVER/DISPLAY SYSTEM

83-12-7

FIGURE 7. SEATTLE FSS TEST-BED INSTALLATION

| ASPECT ON WHICH COMPARISON IS TO BE MADE | COMPARED TO CONTEMPORARY PRODUCTS THAT YOU ARE PRESENTLY USING FOR THE DISPLAY OF SATELLITE IMAGES, HOW WOULD YOU RATE THE VIDEO DISPLAY OF THESE SATELLITE IMAGES AS OBSERVED IN THIS EVALUATION? | | | | |
|---|---|---|---|---|---|
| RATING SCALE (CHECK ONE COLUMN FOR EACH QUESTION WHICH BEST EXPRESSES YOUR OPINION) | VAST IMPROVEMENT | IMPROVEMENT | NO CHANGE | PRESENT SYSTEM BETTER | PRESENT SYSTEM IS MUCH BETTER |
| 1. SPEED OF DATA ACCESS | | | | | |
| 2. EASE OF OBTAINING DATA | | | | | |
| 3. TIME REQUIRED TO PERFORM PRE/POST-DUTY BRIEFING | | | | | |
| 4. THOROUGHNESS IN PRESENTING DATA FOR BRIEFING | | | | | |
| 5. EASE OF EXTRACTING AND INTERPRETING INFORMATION | | | | | |
| 6. ABILITY TO OBTAIN AND UNDERSTAND THE OVERALL WEATHER SITUATION | | | | | |
| 7. CONFIDENCE IN SYSTEM | | | | | |
| 8. OVERALL ABILITY TO GIVE ADEQUATE AND COMPLETE BRIEFING | | | | | |
| 9. ABILITY TO SELF-BRIEF PRIOR TO TAKING THE POSITION | | | | | |
| 10. TIME REQUIRED TO DISSEMINATE INFORMATION | | | | | |
| 11. CLARITY OF THE INFORMATION DISPLAYED | | | | | |
| 12. ABILITY TO ADEQUATELY EXPLAIN THE WEATHER | | | | | |
| 13. EFFECT ON INTEGRATING SATELLITE INFORMATION WITH OTHER BRIEFING PRODUCTS | | | | | |
| 14. AMOUNT OF EYESTRAIN | | | | | |
| 15. SUITABILITY OF DISPLAY AS AN INFORMATION SOURCE | | | | | |

83-12-8

FIGURE 8. GOES SYSTEM SPECIALIST OPINION SURVEY FORM

1. DO YOU PREFER MACHINE DISPLAY (AS IN THE IPS AND ARVIN SYSTEMS) OR HARDCOPY IN THE DISPLAY OF SATELLITE WEATHER INFORMATION FOR USE IN PILOT BRIEFINGS?

2. CAN YOU ADEQUATELY USE THE MACHINE DISPLAY MEDIUM IN THE PERFORMANCE OF YOUR DUTIES AT PRE-FLIGHT. . .AT IN-FLIGHT. . .AT EFAS?

3. WHAT IS YOUR REACTION TO THE SYSTEM'S CAPABILITY TO UPDATE SATELLITE IMAGES?

4. WHAT IS YOUR REACTION TO THE SEQUENCING CAPABILITY OF THE SYSTEM; i.e., DO THE ANIMATED DISPLAYS ASSIST YOU IN WEATHER TRENDING?

5. WHAT WOULD BE YOUR REQUIREMENTS FOR OPTIMUM SYSTEM TRENDING?

6. HOW DOES THE QUALITY OF THE PICTURES DISPLAYED ON THE CRT AND TV MONITOR COMPARE WITH THE QUALITY OF THE PICTURES OFF THE LASERFAX?

7. WHAT IS YOUR PREFERENCE AS A DISPLAY MEDIUM--CRT, OR TV MONITOR--AND WHY?

8. DOES COLOR ENHANCE OR DETRACT FROM THE USABILITY OF THE WEATHER PRODUCT WHEN COMPARED TO STANDARD BLACK AND WHITE DISPLAYS?

9. WHAT OTHER WEATHER PICTORIAL OVERLAYS WOULD BEST SUPPLEMENT THE INFORMATION ON THE SATELLITE IMAGES?

10. WHAT IS YOUR REACTION TO THE ZOOMING CAPABILITY OF THE SYSTEM, AND FOR WHAT PORTION OF THE PRODUCT TO BE DISPLAYED?

11. PLEASE INDICATE BY CIRCLING YOUR RESPONSES:

    A. THE RATE OF SEQUENCING YOU PREFER
        1. Fast (10-20 Frames Per Second)
        2. Medium (4-9 Frames Per Second)
        3. Slow (2-3 Frames Per Second)

    B. THE DEGREE OF SEQUENCING YOU PREFER
        1. 3-Hour Time Lapsing
        2. 6-Hour Time Lapsing
        3. 12-Hour Time Lapsing
        4. 24-Hour Time Lapsing

    C. WHICH DO YOU FIND EASIER TO WORK WITH
        1. Digitally Enhanced Infrared Images
        2. Standard Video Products

83-12-9

FIGURE 9. GOES SYSTEM EVALUATION QUESTIONNAIRE

SPECIALIST TRAINING/QUALIFICATIONS:

EFAS Training: Yes _____ No _____

Are You Currently Certified? _____

Approx. Time Used _____

GOES Training: Yes _____ No _____

Are You Presently Using These Products? _____

Approx. Time Used _____

Automation Experience: FSS Facility _____

Manual (Non-Automated) _____

Service A _____

MAPS _____

AWANS _____

1. DO YOU FEEL THAT THE VARIOUS IMAGE TYPES AND MOVEMENTS OF THOSE IMAGES ARE AN AID TO EFFICIENT BRIEFINGS?

2. DO YOU THINK THAT ANY IMAGE TYPES ARE EXCESSIVE OR REDUNDANT, SUCH AS COMBINING VISUAL AND INFRARED?

3. WOULD THIS SYSTEM, OR A SIMILAR SYSTEM, ADD TO YOUR ABILITY TO SELF-BRIEF?

4. WHAT COMMENTS, IF ANY, WOULD YOU MAKE REGARDING THE AMOUNT OF INFORMATION THAT IS DISPLAYED ON THE SCREEN AT ONE TIME?

5. IF YOU HAD A ZOOM CAPABILITY, WHAT WOULD BE YOUR PREFERENCES; I.E., A 400-600 MILE RADIUS, OR WHAT? ALSO, WOULD YOU LIKE THIS DISPLACED; I.E., ABILITY TO SELECT THE AREA OF THE COUNTRY YOU WANT?

6. IS THERE ANYTHING YOU WANT TO ADD OR COMMENT ON?

83-12-10

FIGURE 10. GOES SYSTEM FINAL INTERVIEW QUESTIONNAIRE

The number of responses within each choice was weighed by the value of that category. A mean and standard error of the mean were computed for each of the aspects. Student's "t" Tests were performed to determine the statistical significance of the deviation of the mean response from the center of the scale (3 = no change). For those aspects whose means were significantly above 3.0, the consensus of the respondents was that an improvement would occur in that aspect due to the GOES. If the mean fell significantly below 3.0, a decrease in that aspect was noted. A confidence level of alpha, equal to or less than 0.05, was used to determine significance of the "t" ratio. Since there was no reason to expect deviations from the mean in only one direction, two-tailed "t" Tests were used for all the aspects.

In addition to the student's "t" Test, the data were also analyzed using the Kolmogorov-Smirnov One Sample Test. This test determined whether the specialist responses can reasonably be thought to have come from a population having the theoretical distribution in which each of the five ranks would receive one-fifth of the responses. The null hypothesis is that there is no difference in the expected number of choices for each of the ranks, and any observed differences are merely chance variations. The region of rejection consists of all values of D, which are so large that the probability associated with their occurrence under the null hypothesis is equal to or less than $\alpha = 0.05$.

An analysis of variance and a Newman-Keuls Multiple Comparison Test were also conducted.

## TABULATION OF STUDY RESULTS

Tables 1a through 1o present the tabulation of responses by test site location for each aspect on the GOES System Specialist Opinion Survey Form (figure 8). The major column heading from left to right are the same as the column headings on the survey form. As depicted in figure 11, 84.7 percent of all responses to aspects agree that electronic displayed SAT-WX images are better. This percent is derived by adding the number of responses for columns "Vast Improvement" and "Improvement" for aspects 4, 5, 6, 8, 9, 11, 12, and 13. The result is divided by the total number of responses. Items 1, 2, 3, 7, 10, 14, and 15 address features of the Goes Distribution Display System (GDDS) test-bed, thus, these data are excluded from the percent calculations as depicted in figure 9.

Tables 2a through 2c show the results of the student's "t" Test performed on the data to determine if the respondents had a significant preference regarding the method used to display SAT-WX Products. The consensus, based on statistical significance regarding the perceived improvement, is presented for each aspect under the column heading "Rating of GDDS Compared to Present System."

The relative rank of change magnitude for each aspect are presented under the column heading "Rank." Rank was determined by utilizing the absolute value of the "t" ratio. The largest "t" ratio was given a rank of 1, the second largest was given a rank of 2, and so on, to the least change which was given a rank of 15. In general, the more significant the change, the smaller the numerical value of the rank.

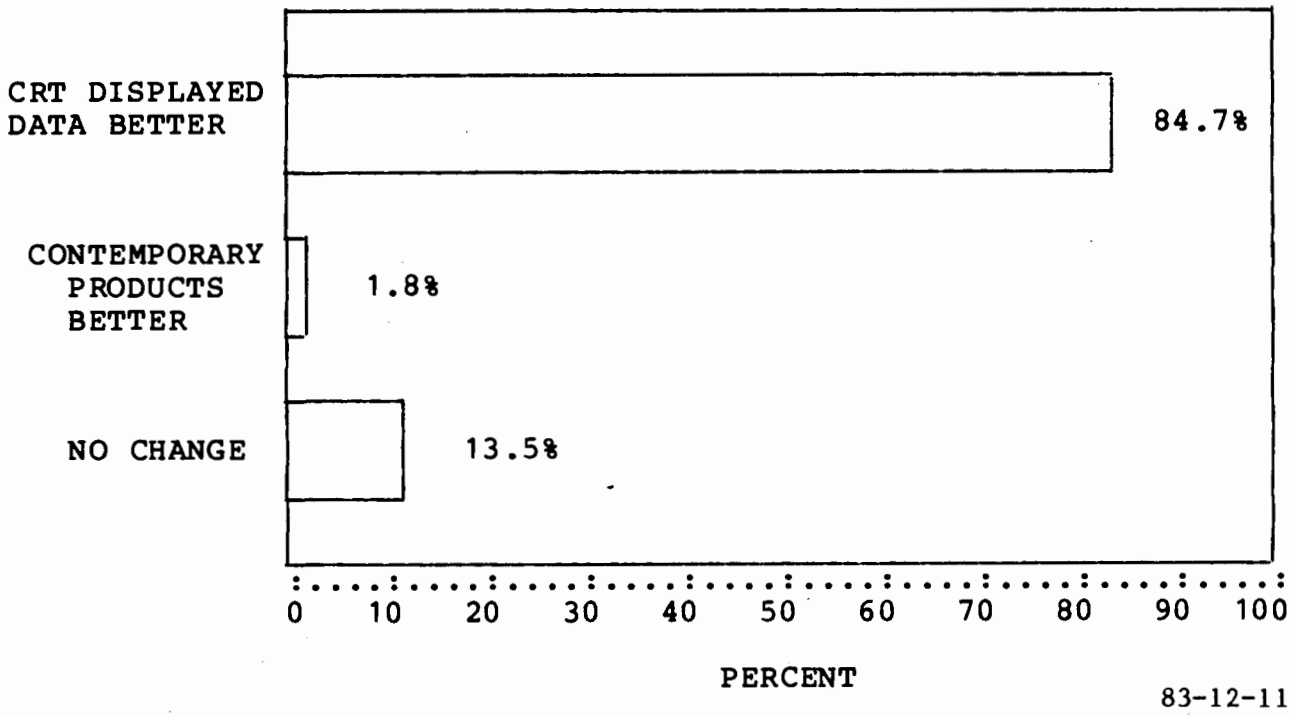


FIGURE 11. SUMMARY OF SURVEY RESPONSES

In addition, tables 19, 20, and 21 depict results obtained by the Kolmogorov-Smirnov Test. Some aspects, particularly at the BOS FSS, were found not to be statistically significant by this test. However, it should be noted that the mean responses for these aspects were favorable to electronic display SAT-WX Products.

Table 22 shows the results of the Analysis of Variance. Since significant differences between means are indicated, there was a need to continue with a multiple comparison test. The Newman-Kuels Test was used to determine where the differences exist. No significant differences were found in the responses between subjects evaluated at the Technical Center and SEA FSS. In contrast, numerous differences are noted when the results of the BOS FSS study is compared against these same groups. The results of the Newman-Kuels Test are shown in table 5.

## RETROSPECT

Specialists in all three phases of the GOES evaluation/demonstration had praise for the CRT display of satellite images along with the associated system enhancements.

The animation feature was its keypoint and the most desirable feature. This sensation of movement, i.e., the "picture animation," gave specialists a third dimension capability that did not exist when viewing still photographs. It allowed for identification and projection not attainable without speed controlled animation of images. Seeing movie-looped pictures proved superior to word conversion and still image analysis.

Another major and, probably, second key feature of the system, as determined by this study, is the pictorial presentation of the weather between reporting points. In other words, the GOES System "fills in the gaps" both between and where there are no reporting points. The benefit that these animated satellite pictures provide is especially important along the entire west coast of the United States because of the total lack of reporting points to the west, over the Pacific Ocean where the major weather influence is generated.

Other major system enhancements highly desired by the evaluating specialists were the zoom and the overlay potentials the system now or could provide.

The zoom feature could be highly useful in certain weather briefing situations such as thunderstorms avoidance along a proposed route of flight. It would also prove highly beneficial in certain FSS locations such as Seattle for localized trouble spots. At these locations the zoom feature could better identify low clouds, fog, and valley pass conditions.

Weather pictorial overlays were also highly desired in a model system. Overlays of the surface analysis charts, 500 millibars (mb), weather depiction, and radar charts were most desired.

However, a note of caution was expressed by the EFAS/GOES specialists and by field facility management. It was strongly noted that these zoom and overlay enhancements should not be added if it were determined to be cost and time prohibitive. It was felt that the field facilities would choose to take the system in a simplified form in order to get it, rather than add enhancements and then possibly lose it all.

A major problem area in the GOES demonstration/evaluation was the lack of consistency of the same image (map) sector, thereby, causing substantial distraction on a weather briefing. This distraction tended to lead to a loss of continuity of thought when trying to comprehend the overall weather situation and movement pattern. It was observed that this problem could be corrected at field sites with the installation of a dedicated line to the user FSS.

Another finding revealed the "both" feature of the GOES automation installation to be a distraction and not a useful function. It was felt the IR and visual (VI) loops were adequate and should be displayed separately.

## SUMMARY OF RESULTS

The consensus at each respective test site for all aspects on which qualitative comparisons were made was favorable towards the electronic display and computer-based access of GOES SAT-WX images. This fact can be readily visualized by

inspecting tables 1 through 5. An analysis of these same tables also reveals such information as to what aspect ranked highest at each of the following three test sites:

FAA Technical Center

Ranked 1. Speed of data access
Ranked 2. Ease of obtaining data
Ranked 3. Thoroughness in presenting data for briefing

BOS FSS

Ranked 1. Suitability of display as an information source
Ranked 2. Ability of self-brief prior to taking the position
Ranked 3. Ability to adequately explain the weather

SEA FSS

Ranked 1. Ability to obtain and understand the overall weather situation
Ranked 2. Ease of obtaining data
Ranked 2. Base of extracting and interpreting information
Ranked 3. Time required to perform pre/post duty briefing

As delineated above, aspect 2, "Ease of obtaining data," was among the highest ranking factors for both the Technical Center and SEA FSS studies. By contrast, aspect 14, "Amount of eyestrain," was rated lowest at all locations, although still acceptable in a machine environment.

The "t" Test and Kolmogorov-Smirnov Test indicates statistical significance for the preponderant majority of aspects compared. For those four that were found not to be statistically significant (as shown in table 17, BOS FSS), it should be pointed out that the majority of responses for these aspects were, nevertheless, favorable toward the CRT displayed products.

## TEST-BED DESIGN/EVALUATION

### SYSTEM DESCRIPTION OF PROTOTYPE TEST-BED.

It was the intent of this phase of project activity to train and expose the user to automated data handling and transfer. To facilitate this task the user evaluation was conducted at the FAA Technical Center FSSL in a realistic environment as possible, utilizing FSS specialists from field facilities. During the evaluation period the user was acquainted with the concept of electronically displayed satellite data and the prototype system used to accomplish this demonstration.

The assembled GDDS test-bed provided the user with electronically displayed data which could be animated (i.e., movie looped) and sectorized. This system was configured around an Information Processing System (IPS) video disc unit and was controlled by an Interdata 7/32 Minicomputer. Satellite Imagery input to the IPS test-bed was received via a half-duplex C-2 conditioned data circuit. Since this line was shared with the Philadelphia Weather Service Forecast Office, control over images received was not possible.

The GDDS model used for this phase of concept evaluation automatically and continuously received, stored, and processed the time synchronized satellite products. The GDDS was capable of recording a total of 96 images (2 per hour), retaining only the last 48 hours of images in a dual format. As each image was received the oldest image was automatically deleted. Hence, the recorder stored the images as two separate, continuous "movie loops."

Incoming images received between 5 minutes before and 25 minutes past each hour were stored in "Loop One." These images were digitally enhanced, stretched gray scale, infrared images. The images received between 25 and 55 minutes past the hour were stored in "Loop Two" and were visible images (for daylight hours) or unmodified infrared (during night periods).

The video disc also served to convert the GDDS information from the audio to the video domain via a digital scan rate conversion technique. In order to provide information compatible with standard resolution (525 lines) video display devices, the system software rejected unused information during the conversion process. The resulting product of the conversion process was then stored on the video disc in analog format for access and display by the user. Thus, the specialist was able to view the stored images in a number of different ways (i.e., the entire 48 hours could be viewed as a "movie" played forward or backward at one of the three sequencing rates (slow, medium, or fast), or stepped through image by image (forward or backwards), allowing "stop action" where desired).

Other special features of the GDDS test-bed allowed the specialist to display a "partial loop" containing the latest 6 hours of images.

Another feature was "image sectorization." However, since sectorizing is accomplished during the receive process, information outside the defined boundaries of the "sector window" is discarded and nonrecoverable. The resulting 3-to-1 enlarged window view was very dynamic and augmented meteorological interpretation when employed in conjunction with enhanced infrared images.

Since sectorized images are handled differently from nonsectorized images, the following discussion is presented to better illustrate this divergence.

The GOES input signal is available to subscribers as an AM signal (carrier frequency = 2400 hertz (Hz)) with a "line structure"; i.e., each satellite image is represented as 1,670 distinct "lines" requiring 500 milliseconds (ms) each for transmission. A full image requires 835 seconds (13.9 minutes) for transmission.

The IPS recorder demodulates the input signal and samples the image lines, performing an analog-to-digital conversion of the signal. In the "digital domain" the signal is "compressed" in time so that the image data can be converted into a video signal suitable for storage and later display. Consequently, this results in a somewhat dissimilar approach in recording and displaying of nonsectorized and/or sectorized satellite images.

NONSECTORIZED IMAGES. Only 484 of the 1,670 input lines are stored (for later display). Two out of every three received lines are ignored and, hence, discarded. Note also that another 220 lines are discarded at the end of image transmission, thus, the "bottom" of the full GOES image is "chopped off." Of the 1,670 input lines, the recorder saves lines 1, 4, 7, 10 . . . 1,450. For each line of the

received image, there are 475 ms of "active" picture data. The recorder takes 987 samples (8-bit words) during that 475 ms period of each line.

SECTORIZED IMAGES. The recorder stores 484 consecutive lines out of the full 1,670 available. It takes 987 samples (8-bit words) during 158-ms period for each of the 484 lines (158 ms is one-third of 475 ms). The first line recorded and the start of the 158-ms period is controlled by the operator. Note that the sectorized image has more detail and three times the actual resolution of a nonsectorized image. Contrary to the actual appearance of some enhanced IR images, sectorized images actually have less signal degradation than nonsectorized images.

A 14-inch (diagonal measure) display device was utilized in the GDDS test-bed installation. Since the electronic display also functioned as an alphanumeric feedback device to the user, switching capability between the two modes of operation was provided by a manual switch located at the test operating position.

Data acquisition by the user was controlled by means of a standard ACSII keyboard connected via an EIA RS-232C channel to the Interdata 7/32 Minicomputer. A control program decoded the operators' simple English command and sent the corresponding command code sequence to the IPS unit. At this point of system development the control link between the video disc and the host computer was half-duplex, EIA Standard RS-232C.

At the completion of the initial in-house evaluation of the GDDS, a similar test-bed was readied for further evaluation at selected field sites. This system consisted of the same IPS core unit, but was assembled as a "stand-alone" system with control/access of functions and features accomplished with a Radio Shack TRS-80 Microprocessor.

BOS and SEA FSS's best fit the site requirement model when all aspects of the aforementioned site selection criteria were applied. The field tests phase encompassed a 6-month period beginning April 1981 and ending in August 1981. This area of project activity is discussed in greater detail in the "Data Analysis" section of this report.

## EVALUATION OF THE GDDS "STAND ALONE" CONCEPT

The GDDS's test-bed is considered a "stand-alone" system because the data that the system receives, stores, and displays does not impact other FSAS communications. Unlike other automated systems of the FSAS, the GDDS was configured totally independent of other weather processing equipment. Indeed, one of the critical design considerations will be the trade-offs between stand-alone systems and integration of the system into the automated FSAS.

POSITIVE ASPECTS.

In review, the positive aspects of the GDDS test-bed include the facts that the system as configured:

1. Provides image animation at sequence rates suitable for trend analyses.

2. Provides adequately high resolution images.

3. Has no impact on National Airspace Data Interchange Network (NADIN) or other facility data processing communication channels.

4. Can be a potential fail-safe system for Satellite Imagery within an FSAS.

5. Can be a cost-effective, stand-alone system for a nonautomated facility.

6. Is ideally suited for overlay analysis and display work; keeping "background" image data independent of various overlays compatible with a similar background is a sensible way to store data.

7. Provides rapid access to a relatively large store of image data.

8. Provides most of the control functions considered critical and necessary by field specialists.

NEGATIVE ASPECTS.

In contrast, the negative aspects of the test-bed include the facts that the system as configured:

1. Is currently designed to receive only GOES-Tap inputs; AM GOES Tap Data are delayed more than 24 minutes from the availability of the "stretched VISSR" data by NESS processing.

2. Discards most of the information in a GOES transmission — when an image is "sectorized" (image zoom), the orginal data from which the sector is prepared is lost and unrecoverable.

3. Stores image data in an analog instead of a digital format; recorded images are stored for display only and are not well suited for additional processing and augmentation (except by overlay) or reproduction.

4. Is not configured for simultaneous looping by multiple users.

Strong sentiment among project members exists that user capability and versatility can be improved by gaining greater control of the satellite data. Use of the "stretch VISSR" data and in-house processing would permit earlier access to the data than currently available from NESS as well as permit greater control over the final product selection (custom sectors, etc). Future design work must explore such possibilities. However, if nothing else, the test-bed has established a "benchmark" of system performance. That is, the ultimate GDDS design must provide at least the capability demonstrated thus far.

Integration of the GDDS into the automated system, to the extent of attempting image transmissions via digital communications channels, would represent a significant alteration of the test-bed configuration design approach. While some advantages might result from this, project work to date indicates that this approach is likely to be totally impractical without some sacrifice.

For example, using a 9600 baud channel to transmit a relatively good quality image (4 x 512 x 8 bits) requires approximately 4 minutes. The implications of this fact are enormous. Clearly, "image traffic" on the automated system's data channels would bog down the entire facility if significant number of images are transmitted with each requiring 4 minutes. To handle the traffic, either the flow of images

would have to be held to a lower level or the 4-minute per image figure would have to be greatly reduced. Cutting down the 4 minutes would mean either making a significant reduction in image resolution (and quality) or creation of some new encoding technique not currently developed.

ALTERNATIVE APPROACHES.

The general direction of this project has been to develop a computer controlled data link for dissemination of Satellite Imagery in the Model II FSAS. Recall that GOES Weather Satellite Products are not now part of the requirements for the Model II FSAS. This technical approach has been identified as the primary effort, but other alternatives do not exist. Some of these alternatives now appear more viable than the originally proposed primary scheme. The current data flow plan in the FSAS has all tabular and graphical data funneled through the FSDPS. These data are then made available to the associated AFSS's over a full duplex 9600 baud communications line link (figure 12). Herein lies two problems: (1) the system data space required, and (2) the distribution (communication tasks) capabilities.

First, we will address data space in terms of what is required for operational needs. Then we will consider what, if any, archival space is required. It is conjectured that four images per hour would be optimum. Consequently, system data space is calculated on this premise and not from any evaluated requirement. Each image contains 125K bytes of information, requiring a 500K buffering requirement, as well as a 15-minute window for transmission and receipt of each product. The large space requirement of Satellite Images and the distribution of that information within the FSAS could result in unacceptable response times to the user. Overloading the system with data and communication tasks seems quite likely. However, there are alternatives that warrant further evaluation in order to eliminate this possibility.

The first alternative would be to keep the present system of single hardcopy units utilizing the slower, 2400 baud telephone communications link. The advantage of this proposal is that this is a proven system, and no hardware and/or development costs would be involved. However, the FSAS is designed to do away with paper. To keep such a system may prove to be an encumbrance to the overall automation effort. Another noted disadvantage is that a single copy implies limited utility. That is, only one specialist at a time could have access to this single copy — no multiposition display capability would exist for this mode of operation. In addition, the single product format does not allow a simple solution for developing a trend analysis nor lends itself to timely and intrafacility dissemination.

It is concluded that certain advantages such as utilizing existing hardware and system reliability are good reasons for keeping the present system. On the other hand, the limited scope of single paper products in an automated environment could constitute a major distraction to the effective utilization of these same products.

The second alternative would be to implement a stand-alone system such as the one developed for the field test phase of this project. Figure 13 presents a profile of the stand-alone system modified for multiposition, simultaneous display, and adaptive graphics capability. This system offers many advantages over the previously discussed concept. The equipment consist of commercially available off-the-shelf components; is compatible with all electronic display devices; can work with the more economical, lower speed telecommunications link; and presents

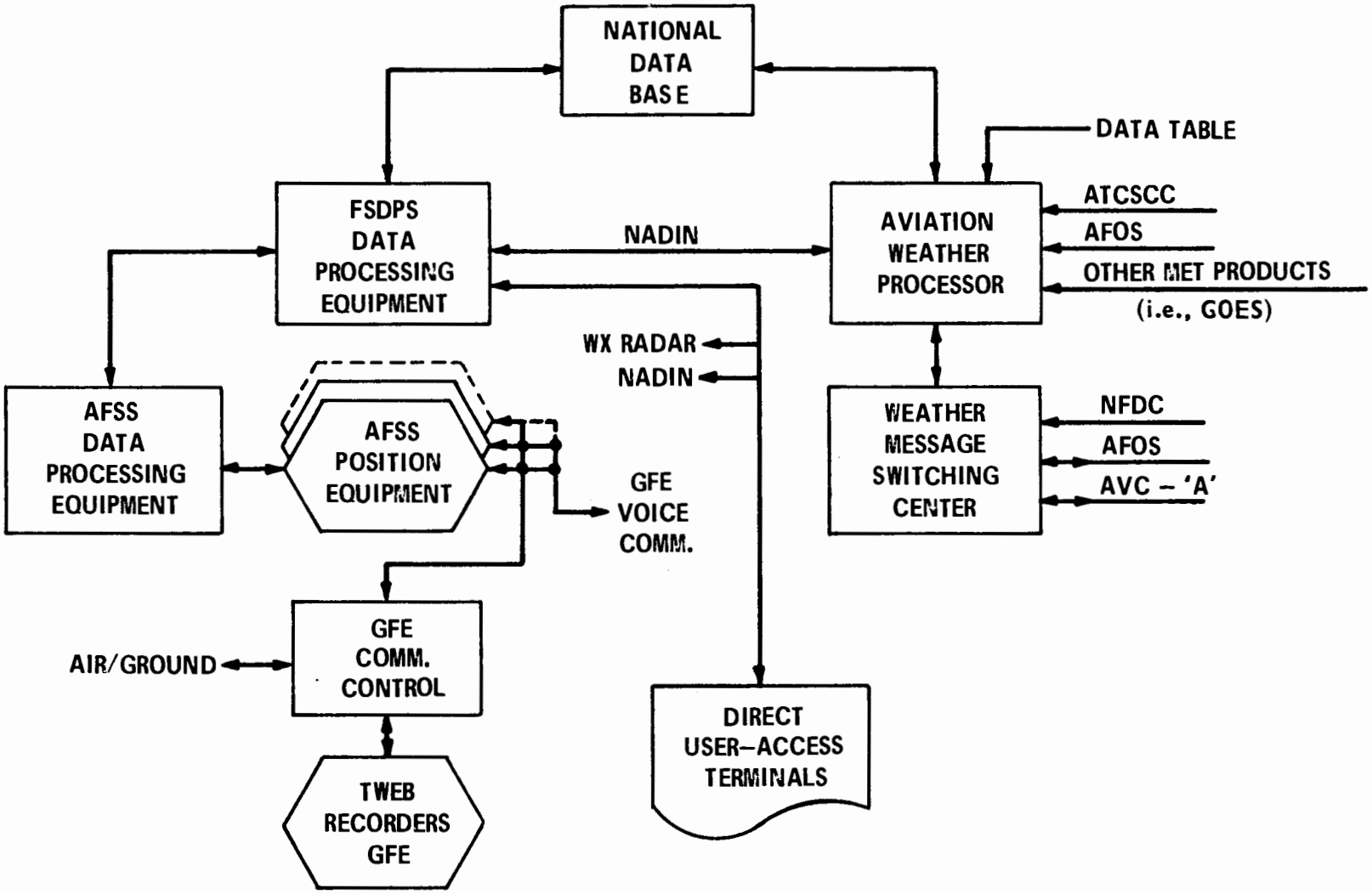


FIGURE 12. FSAS INFORMATION FLOW

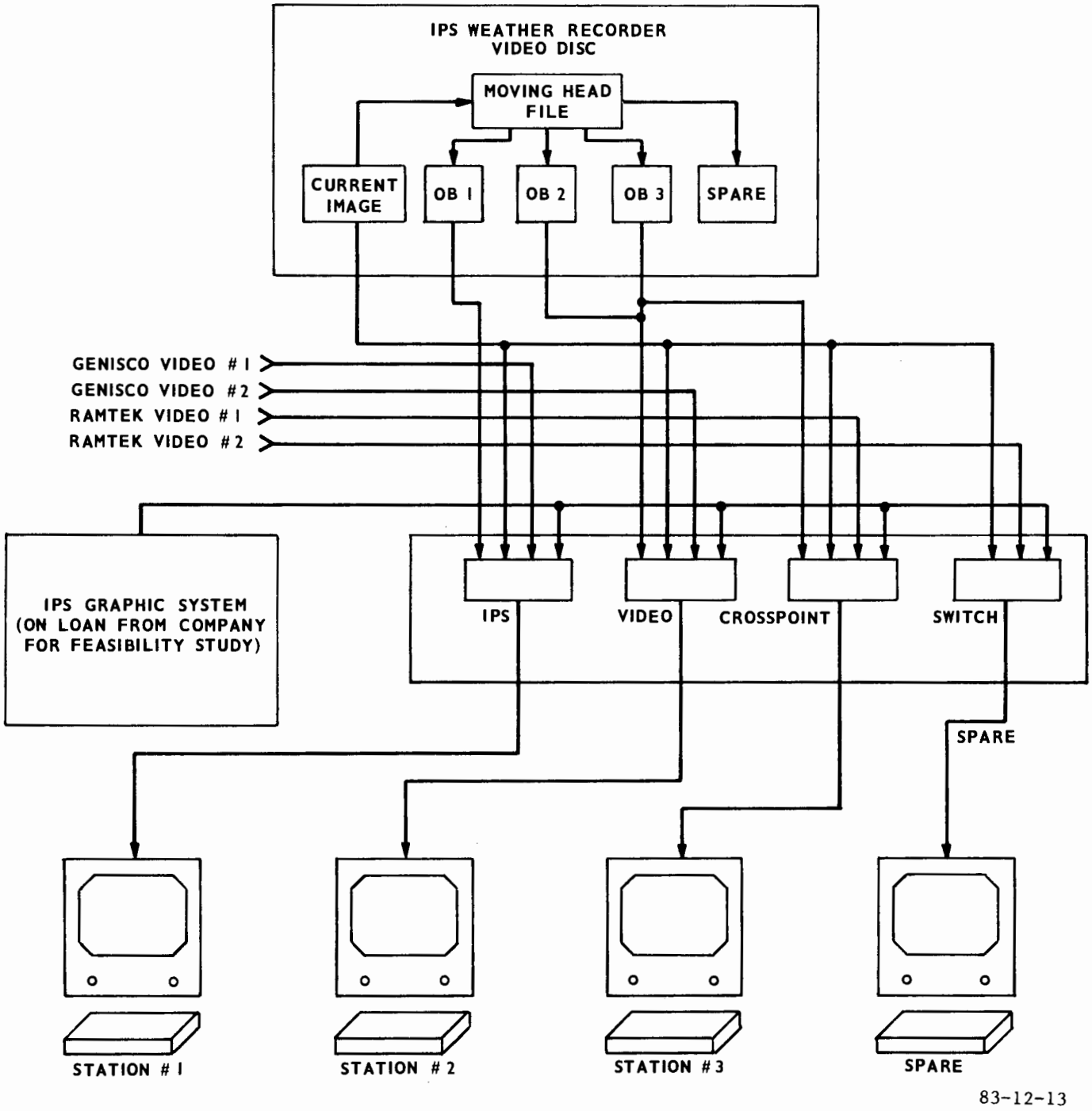


FIGURE 13. STAND-ALONE SYSTEM PROFILE

quasi-automation of satellite data with no impact to host systems. Moreover, it completely eliminates paper filing and storage requirements.

ADVANCED CONCEPTS.

Another method of displaying satellite data at the AFSS is to digitize the image as it is received over the National Oceanic and Atmospheric Administration (NOAA)/NESS telephone line as either a GOES tap or a slave GOES tap. (Note: slaves cannot request data.) If this image is digitized at the FSDPS, it can be transmitted over the 9600 baud full-duplex, synchronous telecommunications lines that will link the FSDPS to the AFSS. A refresh-memory at the specialist positions would be required with a resolution of 640 x 512 displayable picture elements (PIXEL's) and an 8-level grey scale. This would be adequate for display of the data; a minimum of 983,040 bits/image (640 x 512 x 3) must be transferred if no data compaction techniques are used. However, there is reason to believe the total number of bits can be reduced by approximately 50 percent when displaying satellite data in a digitized image form.

Two methods for accomplishing this have been devised:

1. Transition point run length encoding where only the changes in the image are recorded, as opposed to the image value for each individual PIXEL.

2. Delta value encoding where the PIXEL value is represented as a change from the preceding value.

Empirical testing will determine the optimal method to be used for the transmission of the Satellite Image. (Note: the calculations to follow assume no compaction.)

Added to the above will be the header and error check information (8 bytes) associated with each 256-byte message packet in an ABCCP protocol. Any retransmission of invalid data must also be considered in determining the total time necessary to transmit the image. A 10-percent retransmission rate will be assumed.

Total bits = 980,000 (data) + 30,000 Header + 100,000 Retrans

= 1,110,000 bits

$$\text{Time} = \frac{\text{Bit}}{S} = \frac{1{,}110{,}000}{9600} = 115.6 \text{ seconds} \quad 2 \text{ minutes}$$

Allowing some system overhead for polling and establishing the link, the image will take approximately 2 minutes to be transferred. This figure will change proportionately to grey levels, resolution, baud rate, and compaction efficiency. There is a possibility that this line usage will overload the telelink between the AFSS and FSDPS. If this proves to be the case, the GOES tap can be installed at the AFSS. Image processing would then, of course, be performed at the AFSS. Another benefit of installing the system and digitizing the data at the AFSS is that the specialist will have control over resolution (zooming) and grey scale.

An advantage to receipt, processing, and storage at the AFSS is that it would now be possible to perform image processing and enhancement on the data to provide more information than is possible from simple direct viewing.

In order to determine the optimum grey scale levels, resolution, and compaction so as to keep transmission time to a minimum, a custom microprocessor-controlled Satellite Image digitizer is in the process of being designed and constructed (see 8/32 TANDEM GOES Weather Satellite Image Interface). This will enable project personnel to digitize and store the satellite data on disc, retrieve this image via the Interdata 8/32 Minicomputer, and display it on the Genisco or RAMTEC Display Generation System(s) at the FAA Technical Center. The software to encode the Satellite Images is currently being developed.

Upon completion, various Satellite Images will be encoded employing both techniques and the optimum method determined. The software to display the decoded reconstructed image on the Genisco Display has been completed. This device (presently under construction) will be able to plug into any general purpose computer (a change/improvement from the initial system design). Figure 14 graphically depicts the system design and conceptual configuration.

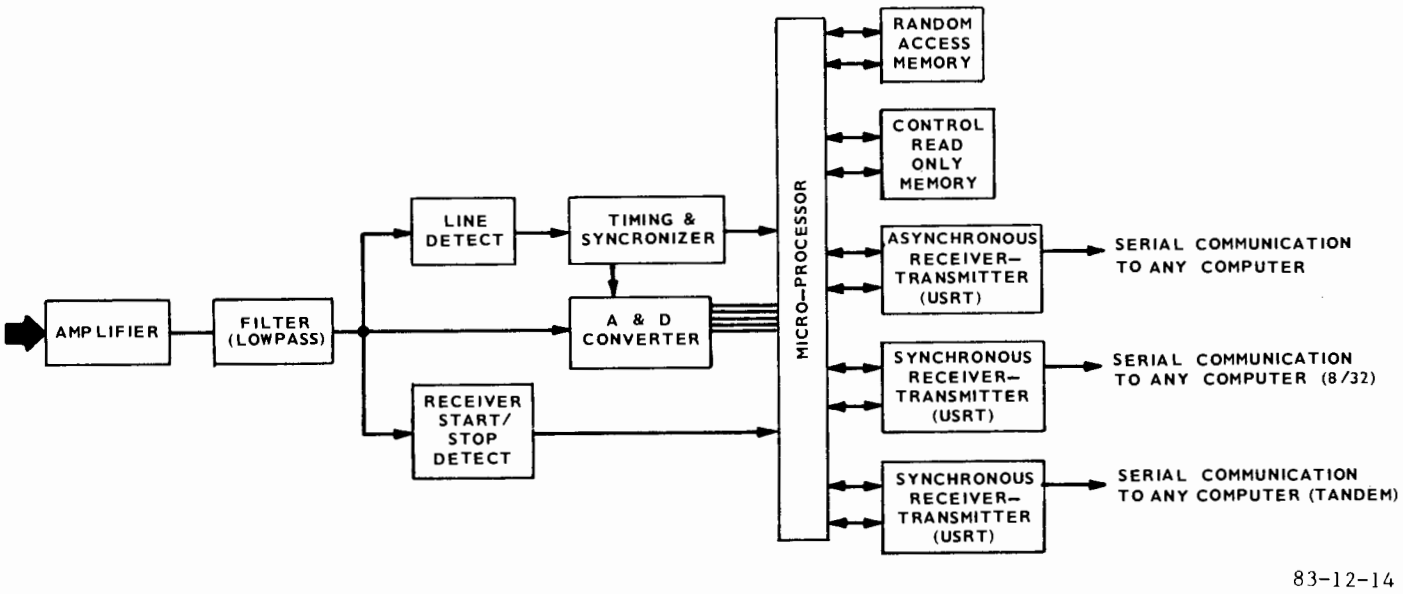


FIGURE 14. SAT-WX IMAGE DISTRIBUTION/DISPLAY SYSTEM — ADVANCED CONCEPT

## CONCLUSIONS

The project has convincingly established that the presentation of animated Satellite Imagery can make major improvements in the quality and reliability of Flight Service Station (FSS) preflight briefings. The use of animation will overcome known shortcomings of the present system. The primary conclusions are:

1. Animation of Satellite Imagery is required to enable FSS specialists to conduct trend analyses. The need for animation necessitates the use of video displays on cathode-ray tube (CRT) devices. Hardcopy/paper devices are not suitable for animation, though they should be retained as backup.

2. With respect to dissemination of imagery from source to the users, the flow of video data within a Flight Service Automation System (FSAS) cannot be handled by a 9600 baud channel. Reasonable quality image animation with adequate resolution requires data transmission rates far in excess of the communications system proposed in the FSAS. Because of this, a Satellite Image data link to an Automated Flight Service Station (AFSS) must be dedicated and not shared with other system communications. In addition, time-sharing with other communications will result in interference with image animation sequences.

3. Reactions documented from field specialists indicate a "want it now" desire for the capability provided by the Geostationary Operational Environmental Satellite (GOES) Distribution Display System (GDDS) test-bed in its current configuration. While design improvements are envisioned, the current stand-alone system demonstrated in the field is adequate for animation as well as a number of other advanced features (i.e., image sectorizing).

4. Several major decisions will have to be made regarding centralization/decentralization of the data base (i.e., how much image data should be stored in a user's terminal versus stored at a central distribution point), and the format of the data itself at various points in the entire system (i.e., analog versus digital).

5. Future project activity should focus on gaining greater control of the satellite data and dealing with the voluminous data traffic problems associated with the management and distribution of an "image data base." Primary project design goals should entail:

   a. Providing more control by the user and additional display features.
   b. Improving the timeliness and quality of received Satellite Image data.
   c. Reducing data transmission and other major system costs.

To illustrate the massive throughput requirements of transmitting a video image, over 4 minutes are required to transmit a single high quality image (484 x 512 x 8 bits of data) using a 9600 baud channel (a data channel which is relatively expensive, although common in the computer industry).

Clearly, having 10 users in a single facility wanting 10 different image display products, some animated, poses immense data capacity requirements — requirements that could never be met with 9600 baud channels.

To make the data problems more manageable, techniques for digitally encoded video are suggested as viable data "compression" methods. However, schemes which may be viable and acceptable for Satellite Imagery will require further development and evaluation. This is particularly true because the final judge of the quality of an "image data base" is the human eye, which is unusually sensitive to certain kinds of error but remarkably intolerant of others. Contrary to the normal layman's initial reaction to this seemingly trivial observation, the human eye's role is significant in determining viable encoding techniques and observed results are not intuitively obvious. For example, a video picture in a 242 x 512 x 8 bit format will generally appear to have greater resolution than a 484 x 256 x 8 bit picture, even though both have the same amount of information.

Therefore, improvements to the design of the test-bed configuration will involve careful evaluations of the trade-offs involved. The test-bed Geostationary Operational Environmental Satellite (GOES) Distribution Display System (GDDS) will not only work, but it provides a high resolution image and "stands alone" from the automated system. While the GDDS test-bed is far from perfect (e.g., the analog storage technique is not well-suited to long term archival), the design has certain key aspects which should be retained in the ultimate configuration.

6. To fulfill the requirements of No. 2, a demonstration project would develop the concept that would utilize a commercial satellite data link between the National Environmental Satellite Service (NESS) in Suitland, Maryland, and the Federal Aviation Administration (FAA) Technical Center for lower cost, more responsive and improved user control method for the dissemination of Satellite Imagery. One of the weakest links in the current GDDS system is the dependency on telephone circuitry to route data from NESS at Suitland to the end user. This form of data channel transmission is expensive, not well-suited to user control, and is subject to reliability problems arising from inconsistencies in line variations and the amplitude modulation techniques employed. While the system does work and has supported the GOES network user for years, the system can be improved and the telephone data channel circuits replaced by satellite communications at considerably reduced operational cost.

One obvious alternative is to receive "second-bounce" (stretched Visible Scanning Radiometer (VISSR)) data from the GOES satellite by installing appropriate earth station equipment. Another, better alternative, is to gain access to the data at the CDDF in Suitland. Either stretched VISSR data or GOES-Tap data (which are both used by NESS) process the data and arrange for communicating the data to a commercial telecommunications satellite for subsequent dissemination to all FAA user facilities. Thus, an earth station using a fixed antenna could be installed anywhere in the continental United States to receive the data.

Because standard commercial telecommunications satellite transmission and receiving equipment normally handle video transmissions, this latter alternative could initially provide for GOES-Tap transmissions and later be readily expanded for providing stretched VISSR data.

## RECOMMENDATIONS

1. Establish a laboratory test bed at the Technical Center for fully determining Geostationary Operational Environmental Satellite (GOES) products. This should consist of an earth station for receiving full resolution Visible and Infrared Spin Scan Radiometer (VISSR) data. Include a processing system capable of being programmed to perform all the desired functions as determined by the specialists who evaluated the bread board system tested, plus additional functions that may occur. The system should be capable of interfacing with the Automated Flight Service Station (AFSS).

2. Develop algorithms to provide the highest possible resolution to any display consistent with the size of the sector being displayed.

3. Develop algorithms to overlay other image products on the satellite images such as radar, bar charts, etc.

4. Develop algorithms for image enhancements to satellite imagery specifically for aviation weather (i.e., areas of freezing levels, dew point areas, etc.).

5. Develop algorithms for various sequences for looping; to include visible (VI), infrared (IR), VI enhanced with IR, overlays, etc.

6. Develop algorithms to enable each specialist to call up imagery best enhanced and with overlays to suit his immediate needs while briefing.

7. Develop a set of specifications for a system best suited to the needs of the AFSS specialists.

8. Investigate and determine the costs, cost effectiveness, and capability of the industry to deliver the desired system in a timely manner.

TABLE 1. TABULATION OF RESPONSES BY TEST SITE LOCATION (SHEET 1 OF 8)

ASPECT 1

SPEED OF DATA ACCESS

RATING VIDEO DISPLAYED (CRT) THE GOES SATELLITE IMAGES AS COMPARED TO CONTEMPORARY DISPLAYED PRODUCTS (LASERFAX HARDCOPY)

| | 5 | | 4 | | 3 | | 2 | | 1 | | | |
|---|---|---|---|---|---|---|---|---|---|---|---|---|
| | VAST IMPROVEMENT | | IMPROVEMENT | | NO CHANGE | | BETTER | | MUCH BETTER | | TOTAL* | |
| LOCATION | N | % | N | % | N | % | N | % | N | % | N | % |
| TECHNICAL CENTER | 18 | 85.7 | 3 | 14.3 | 0 | | 0 | | 0 | | 21 | 100 |
| BOSTON FSS | 1 | 9.1 | 5 | 45.5 | 5 | 45.5 | 0 | | 0 | | 11 | 100 |
| SEATTLE FSS | 7 | 63.6 | 4 | 36.4 | 0 | | 0 | | 0 | | 11 | 100 |
| TOTAL | 26 | 60.5 | 12 | 27.9 | 5 | 11.6 | | | | | 43 | 100 |

* TOTALS ROUNDED TO 100 PERCENT

TABLE 1a

ASPECT 2

EASE OF OBTAINING DATA

RATING VIDEO DISPLAYED (CRT) THE GOES SATELLITE IMAGES AS COMPARED TO CONTEMPORARY DISPLAYED PRODUCTS (LASERFAX HARDCOPY)

| | 5 | | 4 | | 3 | | 2 | | 1 | | | |
|---|---|---|---|---|---|---|---|---|---|---|---|---|
| | VAST IMPROVEMENT | | IMPROVEMENT | | NO CHANGE | | BETTER | | MUCH BETTER | | TOTAL* | |
| LOCATION | N | % | N | % | N | % | N | % | N | % | N | % |
| TECHNICAL CENTER | 14 | 66.7 | 7 | 33.3 | 0 | | 0 | | 0 | | 21 | 100 |
| BOSTON FSS | 1 | 10.0 | 5 | 50.0 | 4 | 40.0 | 0 | | 0 | | 10 | 100 |
| SEATTLE FSS | 8 | 72.7 | 3 | 27.3 | 0 | | 0 | | 0 | | 11 | 100 |
| TOTAL | 23 | 54.8 | 15 | 35.7 | 4 | 9.5 | | | | | 42 | 100 |

* TOTALS ROUNDED TO 100 PERCENT

TABLE 1b

TABLE 1. TABULATION OF RESPONSES BY TEST SITE LOCATION (SHEET 2 OF 8)

ASPECT 3

TIME REQUIRED TO PERFORM PRE/POST-DUTY BRIEFING

RATING VIDEO DISPLAYED (CRT) THE GOES SATELLITE IMAGES AS COMPARED TO CONTEMPORARY DISPLAYED PRODUCTS (LASERFAX HARDCOPY)

| | 5 | | 4 | | 3 | | 2 | | 1 | | | |
|---|---|---|---|---|---|---|---|---|---|---|---|---|
| | VAST IMPROVEMENT | | IMPROVEMENT | | NO CHANGE | | BETTER | | MUCH BETTER | | TOTAL* | |
| LOCATION | N | % | N | % | N | % | N | % | N | % | N | % |
| TECHNICAL CENTER | 12 | 57.2 | 7 | 33.3 | 2 | 9.5 | 0 | | 0 | | 21 | 100 |
| BOSTON FSS | 2 | 20.0 | 5 | 50.0 | 3 | 30.0 | 0 | | 0 | | 10 | 100 |
| SEATTLE FSS | 7 | 70.0 | 3 | 30.0 | 0 | | 0 | | 0 | | 10 | 100 |
| TOTAL | 21 | 51.2 | 15 | 36.6 | 5 | 12.2 | | | | | 41 | 100 |

* TOTALS ROUNDED TO 100 PERCENT

TABLE 1c

ASPECT 4

THOROUGHNESS IN PRESENTING DATA FOR BRIEFING

RATING VIDEO DISPLAYED (CRT) THE GOES SATELLITE IMAGES AS COMPARED TO CONTEMPORARY DISPLAYED PRODUCTS (LASERFAX HARDCOPY)

| | 5 | | 4 | | 3 | | 2 | | 1 | | | |
|---|---|---|---|---|---|---|---|---|---|---|---|---|
| | VAST IMPROVEMENT | | IMPROVEMENT | | NO CHANGE | | BETTER | | MUCH BETTER | | TOTAL* | |
| LOCATION | N | % | N | % | N | % | N | % | N | % | N | % |
| TECHNICAL CENTER | 12 | 57.1 | 8 | 38.1 | 1 | 4.8 | 0 | | 0 | | 21 | 100 |
| BOSTON FSS | 0 | | 7 | 70.0 | 3 | 30.0 | 0 | | 0 | | 10 | 100 |
| SEATTLE FSS | 6 | 54.6 | 5 | 45.5 | 0 | | 0 | | 0 | | 11 | 100 |
| TOTAL | 18 | 42.9 | 20 | 47.6 | 4 | 9.5 | | | | | 42 | 100 |

* TOTALS ROUNDED TO 100 PERCENT

TABLE 1d

TABLE 1. TABULATION OF RESPONSES BY TEST SITE LOCATION (SHEET 3 OF 8)

ASPECT 5

EASE OF EXTRACTING AND INTERPRETING INFORMATION

RATING VIDEO DISPLAYED (CRT) THE GOES SATELLITE IMAGES AS COMPARED TO CONTEMPORARY DISPLAYED PRODUCTS (LASERFAX HARDCOPY)

| | 5 | | 4 | | 3 | | 2 | | 1 | | | |
|---|---|---|---|---|---|---|---|---|---|---|---|---|
| | VAST IMPROVEMENT | | IMPROVEMENT | | NO CHANGE | | BETTER | | MUCH BETTER | | TOTAL* | |
| LOCATION | N | % | N | % | N | % | N | % | N | % | N | % |
| TECHNICAL CENTER | 12 | 57.1 | 5 | 23.8 | 4 | 19.1 | 0 | | 0 | | 21 | 100 |
| BOSTON FSS | 0 | | 6 | 66.7 | 2 | 22.2 | 1 | 11.1 | 0 | | 9 | 100 |
| SEATTLE FSS | 8 | 72.7 | 3 | 27.3 | 0 | | 0 | | 0 | | 11 | 100 |
| TOTAL | 20 | 48.8 | 14 | 34.1 | 6 | 14.6 | 1 | 2.4 | | | 41 | 100 |

* TOTALS ROUNDED TO 100 PERCENT

TABLE 1e

ASPECT 6

ABILITY TO OBTAIN AND UNDERSTAND THE OVERALL WEATHER SITUATION

RATING VIDEO DISPLAYED (CRT) THE GOES SATELLITE IMAGES AS COMPARED TO CONTEMPORARY DISPLAYED PRODUCTS (LASERFAX HARDCOPY)

| | 5 | | 4 | | 3 | | 2 | | 1 | | | |
|---|---|---|---|---|---|---|---|---|---|---|---|---|
| | VAST IMPROVEMENT | | IMPROVEMENT | | NO CHANGE | | BETTER | | MUCH BETTER | | TOTAL* | |
| LOCATION | N | % | N | % | N | % | N | % | N | % | N | % |
| TECHNICAL CENTER | 11 | 52.4 | 9 | 42.9 | 1 | 4.8 | 0 | | 0 | | 21 | 100 |
| BOSTON FSS | 2 | 18.2 | 6 | 54.6 | 3 | 27.3 | 0 | | 0 | | 11 | 100 |
| SEATTLE FSS | 9 | 81.8 | 2 | 18.2 | 0 | | 0 | | 0 | | 11 | 100 |
| TOTAL | 22 | 51.2 | 17 | 39.5 | 4 | 9.3 | | | | | 43 | 100 |

* TOTALS ROUNDED TO 100 PERCENT

TABLE 1f

TABLE 1. TABULATION OF RESPONSES BY TEST SITE LOCATION (SHEET 4 OF 8)

ASPECT 7

CONFIDENCE IN SYSTEM

RATING VIDEO DISPLAYED (CRT) THE GOES SATELLITE IMAGES AS COMPARED TO CONTEMPORARY DISPLAYED PRODUCTS (LASERFAX HARDCOPY)

| | 5 | | 4 | | 3 | | 2 | | 1 | | | |
|---|---|---|---|---|---|---|---|---|---|---|---|---|
| | VAST IMPROVEMENT | | IMPROVEMENT | | NO CHANGE | | BETTER | | MUCH BETTER | | TOTAL* | |
| LOCATION | N | % | N | % | N | % | N | % | N | % | N | % |
| TECHNICAL CENTER | 10 | 47.6 | 7 | 33.3 | 4 | 19.1 | 0 | | 0 | | 21 | 100 |
| BOSTON FSS | 0 | | 3 | 30.0 | 6 | 60.0 | 1 | 10.0 | 0 | | 10 | 100 |
| SEATTLE FSS | 3 | 27.3 | 6 | 54.6 | 1 | 9.1 | 0 | | 1 | 9.1 | 11 | 100 |
| TOTAL | 13 | 31.0 | 16 | 38.1 | 11 | 26.2 | 1 | 2.4 | 1 | 2.4 | 42 | 100 |

* TOTALS ROUNDED TO 100 PERCENT

TABLE 1g

ASPECT 8

OVERALL ABILITY TO GIVE ADEQUATE AND COMPLETE BRIEFING

RATING VIDEO DISPLAYED (CRT) THE GOES SATELLITE IMAGES AS COMPARED TO CONTEMPORARY DISPLAYED PRODUCTS (LASERFAX HARDCOPY)

| | 5 | | 4 | | 3 | | 2 | | 1 | | | |
|---|---|---|---|---|---|---|---|---|---|---|---|---|
| | VAST IMPROVEMENT | | IMPROVEMENT | | NO CHANGE | | BETTER | | MUCH BETTER | | TOTAL* | |
| LOCATION | N | % | N | % | N | % | N | % | N | % | N | % |
| TECHNICAL CENTER | 8 | 38.1 | 10 | 47.6 | 3 | 14.3 | 0 | | 0 | | 21 | 100 |
| BOSTON FSS | 0 | | 6 | 54.6 | 5 | 45.5 | 0 | | 0 | | 11 | 100 |
| SEATTLE FSS | 5 | 45.5 | 5 | 45.5 | 1 | 9.1 | 0 | | 0 | | 11 | 100 |
| TOTAL | 13 | 30.2 | 21 | 48.8 | 9 | 20.9 | | | | | 43 | 100 |

* TOTALS ROUNDED TO 100 PERCENT

TABLE 1h

TABLE 1. TABULATION OF RESPONSES BY TEST SITE LOCATION (SHEET 5 OF 8)

ASPECT 9

ABILITY TO SELF-BRIEF PRIOR TO TAKING THE POSITION

RATING VIDEO DISPLAYED (CRT) THE GOES SATELLITE IMAGES AS COMPARED TO CONTEMPORARY DISPLAYED PRODUCTS (LASERFAX HARDCOPY)

| | 5 | | 4 | | 3 | | 2 | | 1 | | | |
|---|---|---|---|---|---|---|---|---|---|---|---|---|
| | VAST IMPROVEMENT | | IMPROVEMENT | | NO CHANGE | | BETTER | | MUCH BETTER | | TOTAL* | |
| LOCATION | N | % | N | % | N | % | N | % | N | % | N | % |
| TECHNICAL CENTER | 9 | 42.9 | 11 | 52.4 | 1 | 4.8 | 0 | | 0 | | 21 | 100 |
| BOSTON FSS | 3 | 27.3 | 7 | 63.6 | 1 | 9.1 | 0 | | 0 | | 11 | 100 |
| SEATTLE FSS | 5 | 45.5 | 6 | 54.6 | 0 | | 0 | | 0 | | 11 | 100 |
| TOTAL | 17 | 39.5 | 24 | 55.8 | 2 | 4.7 | | | | | 43 | 100 |

* TOTALS ROUNDED TO 100 PERCENT

TABLE 1i

ASPECT 10

TIME REQUIRED TO DISSEMINATE INFORMATION

RATING VIDEO DISPLAYED (CRT) THE GOES SATELLITE IMAGES AS COMPARED TO CONTEMPORARY DISPLAYED PRODUCTS (LASERFAX HARDCOPY)

| | 5 | | 4 | | 3 | | 2 | | 1 | | | |
|---|---|---|---|---|---|---|---|---|---|---|---|---|
| | VAST IMPROVEMENT | | IMPROVEMENT | | NO CHANGE | | BETTER | | MUCH BETTER | | TOTAL* | |
| LOCATION | N | % | N | % | N | % | N | % | N | % | N | % |
| TECHNICAL CENTER | 10 | 47.6 | 8 | 38.1 | 3 | 14.3 | 0 | | 0 | | 21 | 100 |
| BOSTON FSS | 0 | | 4 | 36.4 | 7 | 63.6 | 0 | | 0 | | 11 | 100 |
| SEATTLE FSS | 4 | 36.4 | 6 | 54.6 | 1 | 9.1 | 0 | | 0 | | 11 | 100 |
| TOTAL | 14 | 32.6 | 18 | 41.9 | 11 | 25.6 | | | | | 43 | 100 |

* TOTALS ROUNDED TO 100 PERCENT

TABLE 1j

TABLE 1. TABULATION OF RESPONSES BY TEST SITE LOCATION (SHEET 6 OF 8)

ASPECT 11

CLARITY OF THE INFORMATION DISPLAYED

RATING VIDEO DISPLAYED (CRT) THE GOES SATELLITE IMAGES AS COMPARED TO CONTEMPORARY DISPLAYED PRODUCTS (LASERFAX HARDCOPY)

| | 5 | | 4 | | 3 | | 2 | | 1 | | | |
|---|---|---|---|---|---|---|---|---|---|---|---|---|
| | VAST IMPROVEMENT | | IMPROVEMENT | | NO CHANGE | | BETTER | | MUCH BETTER | | TOTAL* | |
| LOCATION | N | % | N | % | N | % | N | % | N | % | N | % |
| TECHNICAL CENTER | 6 | 28.6 | 8 | 38.1 | 5 | 23.8 | 2 | 9.5 | 0 | | 21 | 100 |
| BOSTON FSS | 1 | 9.1 | 4 | 36.4 | 3 | 27.3 | 3 | 27.3 | 0 | | 11 | 100 |
| SEATTLE FSS | 5 | 45.5 | 4 | 36.4 | 2 | 18.2 | 0 | | 0 | | 11 | 100 |
| TOTAL | 12 | 27.9 | 16 | 37.2 | 10 | 23.3 | 5 | 11.6 | | | 43 | 100 |

* TOTALS ROUNDED TO 100 PERCENT

TABLE 1k

ASPECT 12

ABILITY TO ADEQUATELY EXPLAIN THE WEATHER

RATING VIDEO DISPLAYED (CRT) THE GOES SATELLITE IMAGES AS COMPARED TO CONTEMPORARY DISPLAYED PRODUCTS (LASERFAX HARDCOPY)

| | 5 | | 4 | | 3 | | 2 | | 1 | | | |
|---|---|---|---|---|---|---|---|---|---|---|---|---|
| | VAST IMPROVEMENT | | IMPROVEMENT | | NO CHANGE | | BETTER | | MUCH BETTER | | TOTAL* | |
| LOCATION | N | % | N | % | N | % | N | % | N | % | N | % |
| TECHNICAL CENTER | 9 | 42.9 | 9 | 42.9 | 3 | 14.3 | 0 | | 0 | | 21 | 100 |
| BOSTON FSS | 0 | | 8 | 72.7 | 3 | 27.3 | 0 | | 0 | | 11 | 100 |
| SEATTLE FSS | 5 | 50.0 | 5 | 50.0 | 0 | | 0 | | 0 | | 10 | 100 |
| TOTAL | 14 | 33.3 | 22 | 52.4 | 6 | 14.3 | | | | | 42 | 100 |

* TOTALS ROUNDED TO 100 PERCENT

TABLE 11

TABLE 1. TABULATION OF RESPONSES BY TEST SITE LOCATION (SHEET 7 OF 8)

ASPECT 13

EFFECT ON INTEGRATING SATELLITE INFORMATION WITH OTHER BRIEFING PRODUCTS

RATING VIDEO DISPLAYED (CRT) THE GOES SATELLITE IMAGES AS COMPARED TO CONTEMPORARY DISPLAYED PRODUCTS (LASERFAX HARDCOPY)

| | 5 | | 4 | | 3 | | 2 | | 1 | | | |
|---|---|---|---|---|---|---|---|---|---|---|---|---|
| | VAST IMPROVEMENT | | IMPROVEMENT | | NO CHANGE | | BETTER | | MUCH BETTER | | TOTAL* | |
| LOCATION | N | % | N | % | N | % | N | % | N | % | N | % |
| TECHNICAL CENTER | 11 | 52.4 | 8 | 38.1 | 2 | 9.5 | 0 | | 0 | | 21 | 100 |
| BOSTON FSS | 1 | 9.1 | 7 | 63.6 | 3 | 27.3 | 0 | | 0 | | 11 | 100 |
| SEATTLE FSS | 7 | 63.6 | 4 | 36.4 | 0 | | 0 | | 0 | | 11 | 100 |
| TOTAL | 19 | 44.2 | 19 | 44.2 | 5 | 11.6 | | | | | 43 | 100 |

* TOTALS ROUNDED TO 100 PERCENT

TABLE 1m

ASPECT 14

AMOUNT OF EYESTRAIN

RATING VIDEO DISPLAYED (CRT) THE GOES SATELLITE IMAGES AS COMPARED TO CONTEMPORARY DISPLAYED PRODUCTS (LASERFAX HARDCOPY)

| | 5 | | 4 | | 3 | | 2 | | 1 | | | |
|---|---|---|---|---|---|---|---|---|---|---|---|---|
| | VAST IMPROVEMENT | | IMPROVEMENT | | NO CHANGE | | BETTER | | MUCH BETTER | | TOTAL* | |
| LOCATION | N | % | N | % | N | % | N | % | N | % | N | % |
| TECHNICAL CENTER | 2 | 10.5 | 5 | 26.3 | 9 | 47.4 | 3 | 15.8 | 0 | | 19 | 100 |
| BOSTON FSS | 1 | 9.1 | 1 | 9.1 | 5 | 45.5 | 3 | 27.3 | 1 | 9.1 | 11 | 100 |
| SEATTLE FSS | 2 | 18.2 | 2 | 18.2 | 6 | 54.6 | 1 | 9.1 | 0 | | 11 | 100 |
| TOTAL | 5 | 12.2 | 8 | 19.5 | 20 | 48.8 | 7 | 17.1 | 1 | 2.4 | 41 | 100 |

* TOTALS ROUNDED TO 100 PERCENT

TABLE 1n

TABLE 1. TABULATION OF RESPONSES BY TEST SITE LOCATION (SHEET 8 OF 8)

ASPECT 15

SUITABILITY OF DISPLAY AS AN INFORMATION SOURCE

RATING VIDEO DISPLAYED (CRT) THE GOES SATELLITE IMAGES AS COMPARED TO CONTEMPORARY DISPLAYED PRODUCTS (LASERFAX HARDCOPY)

| | 5 | | 4 | | 3 | | 2 | | 1 | | | |
|---|---|---|---|---|---|---|---|---|---|---|---|---|
| | VAST IMPROVEMENT | | IMPROVEMENT | | NO CHANGE | | BETTER | | MUCH BETTER | | TOTAL* | |
| LOCATION | N | % | N | % | N | % | N | % | N | % | N | % |
| TECHNICAL CENTER | 9 | 42.9 | 11 | 52.4 | 1 | 4.8 | 0 | | 0 | | 21 | 100 |
| BOSTON FSS | 1 | 9.1 | 9 | 81.8 | 1 | 9.1 | 0 | | 0 | | 11 | 100 |
| SEATTLE FSS | 7 | 63.6 | 4 | 36.4 | 0 | | 0 | | 0 | | 11 | 100 |
| TOTAL | 17 | 39.5 | 24 | 55.8 | 2 | 4.7 | | | | | 43 | 100 |

* TOTALS ROUNDED TO 100 PERCENT

TABLE 1o

TABLE 2. RESULTS OF STUDENT'S "t" TEST (SHEET 1 OF 2)

TEST SITE: FAA TECHNICAL CENTER

| | ASPECT | t Ratio | Rating of GDDS compared to present system | Rank |
|---|---|---|---|---|
| 1. | Speed of data access | 23.704 | Improvement | 1 |
| 2. | Ease of obtaining data | 15.816 | Improvement | 2 |
| 3. | Time required to perform pre/post duty briefing | 9.947 | Improvement | 6 |
| 4. | Thoroughness in presenting data for briefing | 11.601 | Improvement | 3 |
| 5. | Base of extracting and interpreting information | 7.862 | Improvement | 11 |
| 6. | Ability to obtain and understand the overall weather situation | 11.236 | Improvement | 4 |
| 7. | Confidence in system | 7.517 | Improvement | 12 |
| 8. | Overall ability to give adequate and complete briefing | 8.105 | Improvement | 10 |
| 9. | Ability of self-brief prior to taking the position | 10.726 | Improvement | 5* |
| 10. | Time required to disseminate information | 8.368 | Improvement | 8 |
| 11. | Clarity of the information displayed | 4.074 | Improvement | 13 |
| 12. | Ability to adequately explain the weather | 8.219 | Improvement | 9 |
| 13. | Effect on integrating satellite information with other briefing products | 9.687 | Improvement | 7 |
| 14. | Amount of eyestrain | 1.556 | No significant Difference | 14 |
| 15. | Suitability of display as an information source | 10.726 | Improvement | 5* |

critical t at .05 = 2.085 except for Aspect 14

*aspect 9 + 15 had identical t ratios and therefore the same rank

critical t at .05 for Aspect 14 = 2.100

TEST SITE: BOSTON FSS

| | ASPECT | t Ratio | Rating of GDDS compared to present system | Rank |
|---|---|---|---|---|
| 1. | Speed of data access | 3.130 | Improvement | 10 |
| 2. | Ease of obtaining data | 3.279 | Improvement | 9 |
| 3. | Time required to perform pre/post duty briefing | 3.856 | Improvement | 7 |
| 4. | Thoroughness in presenting data for briefing | 4.583 | Improvement | 4 |
| 5. | Base of extracting and interpreting information | 2.298 | No significant difference | 12 |
| 6. | Ability to obtain and understand the overall weather situation | 4.301 | Improvement | 6 |
| 7. | Confidence in system | 1.001 | No significant difference | 13 |
| 8. | Overall ability to give adequate and complete briefing | 3.463 | Improvement | 8 |
| 9. | Ability of self-brief prior to taking the position | 6.501 | Improvement | 2 |
| 10. | Time required to disseminate information | 2.391 | Improvement | 11 |
| 11. | Clarity of the information displayed | 0.897 | No significant difference | 14 |
| 12. | Ability to adequately explain the weather | 5.163 | Improvement | 3 |
| 13. | Effect on integrating satellite information with other briefing products | 4.499 | Improvement | 5 |
| 14. | Amount of eyestrain | 0.559 | No significant difference | 15 |
| 15. | Suitability of display as an information source | 7.420 | Improvement | 1 |

critical t at .05 for aspects 2, 3, 4, and 7 = 2.261

critical t at .05 for aspect 5 = 2.305

critical t at .05 for all other aspects = 2.227

TABLE 2. RESULTS OF STUDENT'S "t" TEST (SHEET 2 OF 2)

STUDENT'S t-TEST

TEST SITE: SEATTLE FSS

| | ASPECT | t Ratio | Rating of GDDS compared to present system | Rank |
|---|---|---|---|---|
| 1. | Speed of data access | 10.745 | Improvement | 4* |
| 2. | Ease of obtaining data | 12.265 | Improvement | 2* |
| 3. | Time required to perform pre/post duty briefing | 11.130 | Improvement | 3 |
| 4. | Thoroughness in presenting data for briefing | 9.816 | Improvement | 5 |
| 5. | Base of extracting and interpreting information | 12.265 | Improvement | 2* |
| 6. | Ability to obtain and understand the overall weather situation | 14.888 | Improvement | 1 |
| 7. | Confidence in system | 2.654 | Improvement | 11 |
| 8. | Overall ability to give adequate and complete briefing | 6.712 | Improvement | 7 |
| 9. | Ability of self-brief prior to taking the position | 9.245 | Improvement | 6 |
| 10. | Time required to disseminate information | 6.526 | Improvement | 8 |
| 11. | Clarity of the information displayed | 5.372 | Improvement | 9 |
| 12. | Ability to adequately explain the weather | 9.001 | Improvement | 10 |
| 13. | Effect on integrating satellite information with other briefing products | 10.745 | Improvement | 4* |
| 14. | Amount of eyestrain | 1.616 | No significant Difference | 12 |
| 15. | Suitability of display as an information source | 10.745 | Improvement | 4* |

with exception of aspect 3, critical t at .05 = 2.227

critical t at .05 for aspect 3 and 12 = 2.261

* aspects 1, 13, and 15 had identical t ratios. Similarly aspects 2 and 5 had the same t ratio

TABLE 3. RESULTS OF KOLMOGOROV-SMIRNOV TEST (SHEET 1 OF 2)

TEST SITE: FAA TECHNICAL CENTER

| | ASPECT | D | Rating of GDDS compared to present system |
|---|---|---|---|
| 1. | Speed of data access | .65714 | Improvement |
| 2. | Ease of obtaining data | .60000 | Improvement |
| 3. | Time required to perform pre/post duty briefing | .50476 | Improvement |
| 4. | Thoroughness in presenting data for briefing | .55238 | Improvement |
| 5. | Base of extracting and interpreting information | .40952 | Improvement |
| 6. | Ability to obtain and understand the overall weather situation | .55238 | Improvement |
| 7. | Confidence in system | .40952 | Improvement |
| 8. | Overall ability to give adequate and complete briefing | .45714 | Improvement |
| 9. | Ability of self-brief prior to taking the position | .55238 | Improvement |
| 10. | Time required to disseminate information | .45714 | Improvement |
| 11. | Clarity of the information displayed | .30476 | Improvement |
| 12. | Ability to adequately explain the weather | .45714 | Improvement |
| 13. | Effect on integrating satellite information with other briefing products | .50476 | Improvement |
| 14. | Amount of eyestrain | .24211 | No significant Difference |
| 15. | Suitability of display as an information source | .55238 | Improvement |

critical value of D at .05 = .28724

TEST SITE: BOSTON FSS

| | ASPECT | D | Rating of GDDS compared to present system | critical Value of D at .05 |
|---|---|---|---|---|
| 1. | Speed of data access | .40000 | Improvement | .39122 |
| 2. | Ease of obtaining data | .40000 | No significant difference | .40921 |
| 3. | Time required to perform pre/post duty briefing | .40000 | No significant difference | .40921 |
| 4. | Thoroughness in presenting data for briefing | .40000 | No significant difference | .40921 |
| 5. | Base of extracting and interpreting information | .28889 | No significant difference | .42997 |
| 6. | Ability to obtain and understand the overall weather situation | .40000 | Improvement | .39122 |
| 7. | Confidence in system | .30000 | No significant difference | .40921 |
| 8. | Overall ability to give adequate and complete briefing | .40000 | Improvement | .39122 |
| 9. | Ability of self-brief prior to taking the position | .50909 | Improvement | .39122 |
| 10. | Time required to disseminate information | .40000 | Improvement | .39122 |
| 11. | Clarity of the information displayed | .20000 | No significant difference | .39122 |
| 12. | Ability to adequately explain the weather | .40000 | Improvement | .39122 |
| 13. | Effect on integrating satellite information with other briefing products | .40000 | Improvement | .39122 |
| 14. | Amount of eyestrain | .21818 | No significant Difference | .39122 |
| 15. | Suitability of display as an information source | .50909 | Improvement | .39122 |

TABLE 3. RESULTS OF KOLMOGOROV-SMIRNOV TEST (SHEET 2 OF 2)

TEST SITE: SEATTLE FSS

| | | D | Rating of GDDS compared to present system |
|---|---|---|---|
| 1. | Speed of data access | .60000 | Improvement |
| 2. | Ease of obtaining data | .60000 | Improvement |
| 3. | Time required to perform pre/post duty briefing | .60000 | Improvement |
| 4. | Thoroughness in presenting data for briefing | .60000 | Improvement |
| 5. | Base of extracting and interpreting information | .60000 | Improvement |
| 6. | Ability to obtain and understand the overall weather situation | .61818 | Improvement |
| 7. | Confidence in system | .41818 | Improvement |
| 8. | Overall ability to give adequate and complete briefing | .50909 | Improvement |
| 9. | Ability of self-brief prior to taking the position | .60000 | Improvement |
| 10. | Time required to disseminate information | .50919 | Improvement |
| 11. | Clarity of the information displayed | .41818 | Improvement |
| 12. | Ability to adequately explain the weather | .60000 | Improvement |
| 13. | Effect on integrating satellite information with other briefing products | .60000 | Improvement |
| 14. | Amount of eyestrain | .30909 | No significant Difference |
| 15. | Suitability of display as an information source | .60000 | Improvement |

critical value of D at .05 = .39122 for all aspects except 3

critical value of D at .05 for aspects 3 and 12 = .40921

## TABLE 4. RESULTS OF ANALYSIS OF VARIANCE

Analysis of Variance Between Means

5 - Vast Improvement
4 - Improvement
3 - No Change
2 - Present System Better
1 - Present System Much Better

| | ASPECT | TECH CENTER mean | BOSTON mean | SEATTLE mean | F-RATIO | LEVEL OF SIGNIFICANCE | INTERPRETATION |
|---|---|---|---|---|---|---|---|
| 1. | Speed of data access | 4.857 | 3.636 | 4.636 | 22.938 | .0001 | Highly significant difference between means |
| 2. | Ease of obtaining data | 4.667 | 3.700 | 4.727 | 13.280 | .0001 | Highly significant difference |
| 3. | Time required to perform pre/post duty briefing | 4.476 | 3.900 | 4.700 | 4.116 | .0241 | Significant difference |
| 4. | Thoroughness in presenting data for briefing | 4.524 | 3.700 | 4.545 | 8.514 | .0009 | Highly significant difference |
| 5. | Base of extracting and interpreting information | 4.381 | 3.556 | 4.727 | 7.000 | .0026 | Highly significant difference |
| 6. | Ability to obtain and understand the overall weather situation | 4.476 | 3.909 | 4.818 | 6.793 | .0029 | Highly significant difference |
| 7. | Confidence in system | 4.286 | 3.200 | 3.909 | 5.412 | .0084 | Highly significant difference |
| 8. | Overall ability to give adequate and complete briefing | 4.238 | 3.545 | 4.364 | 5.322 | .0089 | Highly significant difference |
| 9. | Ability of self-brief prior to taking the position | 4.381 | 4.182 | 4.455 | .678 | .5134 | No significant difference |
| 10. | Time required to disseminate information | 4.333 | 3.364 | 4.273 | 8.505 | .0008 | Highly significant difference |
| 11. | Clarity of the information displayed | 3.857 | 3.273 | 4.273 | 3.193 | .0517 | No significant difference |
| 12. | Ability to adequately explain the weather | 4.286 | 3.727 | 4.500 | 4.571 | .0165 | Significant difference |
| 13. | Effect on integrating satellite information with other briefing products | 4.429 | 3.818 | 4.636 | 5.373 | .0086 | Highly significant difference |
| 14. | Amount of eyestrain | 3.316 | 2.818 | 3.455 | 1.4086 | .2570 | No significant difference |
| 15. | Suitability of display as an information source | 4.381 | 4.000 | 4.636 | 3.948 | .0272 | Significant difference |

TABLE 5. RESULTS OF NEWMAN-KUELS TEST (SHEET 1 OF 2)

BOSTON AND SEATTLE

| | | critical value | Difference Between Means | Results |
|---|---|---|---|---|
| 1. | Speed of data access | .4239 | 1.0 | Significant |
| 2. | Ease of obtaining data | .5762 | 1.027 | Significant |
| 3. | Time required to perform pre/post duty briefing | .7110 | .800 | Significant |
| 4. | Thoroughness in presenting data for briefing | .6051 | .845 | Significant |
| 5. | Base of extracting and interpreting information | .8211 | 1.171 | Significant |
| 6. | Ability to obtain and understand the overall weather situation | .6089 | .909 | Significant |
| 7. | Confidence in system | .7771 | .709 | Not Significant |
| 8. | Overall ability to give adequate and complete briefing | .6777 | .819 | Significant |
| 9. | Ability of self-brief prior to taking the position | .5986 | .273 | Not Significant |
| 10. | Time required to disseminate information | .5686 | .909 | Significant |
| 11. | Clarity of the information displayed | .9694 | 1.0 | Significant |
| 12. | Ability to adequately explain the weather | .6739 | .773 | Significant |
| 13. | Effect on integrating satellite information with other briefing products | .6419 | .818 | Significant |
| 14. | Amount of eyestrain | .9880 | .637 | Not Significant |
| 15. | Suitability of display as an information source | .5559 | .636 | Significant |

BOSTON AND TECHNICAL CENTER

| | | critical value | Difference Between Means | Results |
|---|---|---|---|---|
| 1. | Speed of data access | .5098 | 1.221 | Significant |
| 2. | Ease of obtaining data | .4791 | .967 | Significant |
| 3. | Time required to perform pre/post duty briefing | .5912 | .576 | Not Significant |
| 4. | Thoroughness in presenting data for briefing | .5031 | .824 | Significant |
| 5. | Base of extracting and interpreting information | .6827 | .825 | Significant |
| 6. | Ability to obtain and understand the overall weather situation | .5062 | .567 | Significant |
| 7. | Confidence in system | .9346 | 1.086 | Significant |
| 8. | Overall ability to give adequate and complete briefing | .5634 | .693 | Significant |
| 9. | Ability of self-brief prior to taking the position | .4976 | .199 | Not Significant |
| 10. | Time required to disseminate information | .6839 | .969 | Significant |
| 11. | Clarity of the information displayed | .8059 | .5840 | Not Significant |
| 12. | Ability to adequately explain the weather | .5603 | .559 | Not Significant |
| 13. | Effect on integrating satellite information with other briefing products | .5337 | .6110 | Significant |
| 14. | Amount of eyestrain | .8214 | .498 | Not Significant |
| 15. | Suitability of display as an information source | .4622 | .381 | Not Significant |

TABLE 5. RESULTS OF NEWMAN-KUELS TEST (SHEET 2 OF 2)

TECHNICAL CENTER AND SEATTLE

| | | critical value | Difference Between Means | Results |
|---|---|---|---|---|
| 1. | Speed of data access | .4239 | .221 | Not Significant |
| 2. | Ease of obtaining data | .4791 | .060 | Not Significant |
| 3. | Time required to perform pre/post duty briefing | .5912 | .224 | Not Significant |
| 4. | Thoroughness in presenting data for briefing | .5031 | .021 | Not Significant |
| 5. | Base of extracting and interpreting information | .6827 | .346 | Not Significant |
| 6. | Ability to obtain and understand the overall weather situation | .5062 | .342 | Not Significant |
| 7. | Confidence in system | .7771 | .377 | Not Significant |
| 8. | Overall ability to give adequate and complete briefing | .5634 | .126 | Not Significant |
| 9. | Ability of self-brief prior to taking the position | .4976 | .074 | Not Significant |
| 10. | Time required to disseminate information | .5686 | .060 | Not Significant |
| 11. | Clarity of the information displayed | .8059 | .416 | Not Significant |
| 12. | Ability to adequately explain the weather | .5603 | .214 | Not Significant |
| 13. | Effect on integrating satellite information with other briefing products | .5337 | .207 | Not Significant |
| 14. | Amount of eyestrain | .8214 | .139 | Not Significant |
| 15. | Suitability of display as an information source | .4622 | .255 | Not Significant |

SUMMARY OF NEWMAN-KEULS MULTIPLE COMPARISON TEST BETWEEN GROUPS

| Aspect | In-House vs Bos | In-House vs Sea | Bos vs Sea |
|---|---|---|---|
| 1 | Significant Difference | Not Significant | Significant Difference |
| 2 | Significant Difference | Not Significant | Significant Difference |
| 3 | Not Significant | Not Significant | Significant Difference |
| 4 | Significant Difference | Not Significant | Significant Difference |
| 5 | Significant Difference | Not Significant | Significant Difference |
| 6 | Significant Difference | Not Significant | Significant Difference |
| 7 | Significant Difference | Not Significant | Not Significant |
| 8 | Significant Difference | Not Significant | Significant Difference |
| 9 | Not Significant | Not Significant | Not Significant |
| 10 | Significant Difference | Not Significant | Significant Difference |
| 11 | Not Significant | Not Significant | Significant Difference |
| 12 | Not Significant | Not Significant | Significant Difference |
| 13 | Significant Difference | Not Significant | Significant Difference |
| 14 | Not Significant | Not Significant | Not Significant |
| 15 | Not Significant | Not Significant | Significant Difference |

## APPENDIX A

## GOES SYSTEM EVALUATION QUESTIONNAIRE

1. DO YOU PREFER MACHINE DISPLAY (AS IN THE IPS AND ARVIN SYSTEMS) OR HARDCOPY IN THE DISPLAY OF SATELLITE WEATHER INFORMATION FOR USE IN PILOT BRIEFINGS?

2. CAN YOU ADEQUATELY USE THE MACHINE DISPLAY MEDIUM IN THE PERFORMANCE OF YOUR DUTIES AT PRE-FLIGHT. . .AT IN-FLIGHT. . .AT EFAS?

3. WHAT IS YOUR REACTION TO THE SYSTEM'S CAPABILITY TO UPDATE SATELLITE IMAGES?

4. WHAT IS YOUR REACTION TO THE SEQUENCING CAPABILITY OF THE SYSTEM; i.e., DO THE ANIMATED DISPLAYS ASSIST YOU IN WEATHER TRENDING?

5. WHAT WOULD BE YOUR REQUIREMENTS FOR OPTIMUM SYSTEM TRENDING?

6. HOW DOES THE QUALITY OF THE PICTURES DISPLAYED ON THE CRT AND TV MONITOR COMPARE WITH THE QUALITY OF THE PICTURES OFF THE LASERFAX?

7. WHAT IS YOUR PREFERENCE AS A DISPLAY MEDIUM — CRT OR TV MONITOR — AND WHY?

8. DOES COLOR ENHANCE OR DETRACT FROM THE USABILITY OF THE WEATHER PRODUCT WHEN COMPARED TO STANDARD BLACK AND WHITE DISPLAYS?

9. WHAT OTHER WEATHER PICTORIAL OVERLAYS WOULD BEST SUPPLEMENT THE INFORMATION ON THE SATELLITE IMAGES?

10. WHAT IS YOUR REACTION TO THE ZOOMING CAPABILITY OF THE SYSTEM, AND FOR WHAT PORTION OF THE PRODUCT TO BE DISPLAYED?

11. PLEASE INDICATE BY CIRCLING YOUR RESPONSES:

A. THE RATE OF SEQUENCING YOU PREFER:

1. Fast (10-20 Frames Per Second)
2. Medium (4-9 Frames Per Second)
3. Slow (2-3 Frames Per Second)

B. THE DEGREE OF SEQUENCING YOU PREFER:

1. 3-Hour Time Lapsing
2. 6-Hour Time Lapsing
3. 12-Hour Time Lapsing
4. 24-Hour Time Lapsing

C. WHICH DO YOU FIND EASIER TO WORK WITH?

1. Digitally Enhanced Infrared Images
2. Standard Video Products

## APPENDIX B

## RESPONSES FROM THE GOES SYSTEM EVALUATION QUESTIONNAIRE

Forty-six specialists were given a system questionnaire to complete after having had a period of time to familiarize and utilize the test-bed equipment. Flight Service Station (FSS) specialists participation included 24 specialists who came to the Technical Center for an approximate 2-hour in-house evaluation (Phase 1), and 11 subjects each from the Boston FSS and Seattle FSS (Phase 2) following a 3-month in-facility evaluation.

All subjects did not respond to all questions for various reasons. Primarily, where the total response to a question was less than 46, it was due to the evaluator not having had the proper Geostationary Operational Environmental Satellite (GOES) training to render a complete analysis to the question. Also, for ease of interpretation to appropriate questions, percentiles were used to analyze selected questionnaire responses. Finally, those comments most informative and representing the consensus are quoted.

1. DO YOU PREFER MACHINE DISPLAY (AS IN THE IPS) OR HARDCOPY DISPLAY OF SATELLITE WEATHER INFORMATION FOR USE IN PILOT BRIEFINGS?

Of the 46 subjects in the three phases of the GOES Evaluation, 37 preferred machine display, utilizing cathode-ray tubes (CRT's), in the display of satellite weather information for use in pilot briefings. Hardcopy was preferred by four evaluators. Hardcopy had a singular benefit mentioned by several specialists, namely, increased clarity especially on the visual images.

However, even with this benefit, the consensus of the vast majority was for electronic displayed products when looking at the total system utilization, with the capability to have a hardcopy printout on demand when appropriate to the briefing and requirements.

"The electronic display (CRT) is much better suited for pilot briefings because of the looping capabilities, ease in accessibility, and simple operational codings."

"I feel the IPS (electronic display test-bed under evaluation) is better suited for briefings as it is much easier to show a trend and has an easier access to weather data."

"CRT display does not have the clarity of hardcopy, particularly with Visual Imagery (VI). However, advantages of machine display; i.e., movie loop, outweigh this factor."

"I prefer a machine system. In normal situations the hardcopies float around various positions making access difficult, if not impossible."

2. CAN YOU ADEQUATELY USE THE MACHINE DISPLAY MEDIUM IN THE PERFORMANCE OF YOUR DUTIES AT PREFLIGHT...AT IN-FLIGHT...AT EFAS?

Responses to this question were mixed: 33 said "yes," 3 said "no," and 6 gave a conditional, but qualified "yes." The "no" responses were due to lack of training/familiarization associated with interpreting Satellite Imagery.

Responses were highly favorable at the preflight position (100 percent), especially in face-to-face briefings. Responses were somewhat negative at in-flight and EFAS. As one GOES System trained specialist said: "Real-time demands were not met." The greatest value seemed to be in the specialist self-briefing for an overall view of the weather trend. In addition, it was felt that the GOES product could be effectively used at all positions and would augment weather graphical products; e.g., surface analysis charts or a closed circuit television (CCTV) system.

One specialist commented: "The loop feature gives a much better interpretation of movement and development of weather systems and local conditions."

Another stated: "Most effective at EFAS due to long range coverage and requirements of the position. However, it does provide an excellent overview to preflight of large systems."

3. WHAT IS YOUR REACTION TO THE SYSTEM'S CAPABILITY OF THE SYSTEM? DO THE ANIMATED DISPLAYS ASSIST YOU IN WEATHER TRENDING?

Most responses ranged from "very good" to "excellent." Thirty-three were positive, three negative, and ten listed the system as adequate. Update prior to machine display was left to comparison only. In utilizing the CRT the movement leaves little doubt. However, several specialists commented on updates into specific resolution categories.

"The concept is good and very useful in preduty briefing and weather trending."

"Satisfactory, however, it would be more desirable to have several loops available so as to selectively arrange images by IR and visual resolution rates (timer can be used)."

Since there are no reporting stations to the west (over the Pacific Ocean), one Seattle FSS (SEA) FSS specialist's negative, but noteworthy, comment stated that he "preferred a faster update time frame because of weather variability due to low stratus/fog especially over coastal areas having weather reporting stations."

4. WHAT IS YOUR REACTION TO THE SEQUENCING CAPABILITY OF THE SYSTEM? DO THE ANIMATED DISPLAYS ASSIST YOU IN WEATHER TRENDING?

This feature was noted to be most important in the SEA area because of the total lack of reporting stations to the west (i.e., offshore in the Pacific Ocean). Looping is the key because with hardcopy you could miss critical items, e.g., paging through images.

The animation feature was the most highly praised feature identified in this GOES evaluation. The animation and the capability to control one's own pace utilizing the step mode were the major advantages identified in this experimental GOES System. The animated displays noted as being a definite advantage included: (a) seeing a weather trend, (b) developing an insight into weather causes, and (c) being able to observe real-time weather moving over an area (e.g., thunderstorm development). Of those who responded 96.8 percent were positive and only 3.2 percent were negative in answering this question.

"Extremely valuable. The loop feature is very effective in quickly providing a complete weather picture."

"Would like to see it specialized into specific resolution categories."

"Yes, that is the best part."

"This feature is very helpful especially in the SEA area (e.g., you can see the fog burnoff, where it is occurring, and how rapid). You can see thunderstorm development and direction of movement offshore."

5. WHAT WOULD BE YOUR REQUIREMENT FOR OPTIMUM SYSTEM TRENDING?

Comments to this question were broad and varied. Since 21 of the 24 in-house specialists had not had GOES training, their comprehension of the question was limited. Hence, only the responses from those with the formal training in satellite interpretation were considered. Their suggestions were for color enhancements, sectorizing, sequencing at the local level, and the availability of hardcopy. Comments from the BOS FSS and SEA FSS specialists were more appropriate; the most dioristic or discriminative of the comments are the following:

"More control should be given to the specialist for selection of information."

"Being able to depict areas of thunderstorms and tops information."

"To be able to punch in and receive a forecast position of a weather system 2 or 3 hours in advance based on extrapolation."

"We must have our own circuit control so we can control our own area."

"Would like several loops to sequence images according to resolution scales (1/2, 1, or 2 nmi) and image types (i.e., IR/Visual)."

"To be able to group images by some scale and type."

"Each resolution on a separate loop with the ability to have only visual, infrared, or enhanced images of the same resolution shown in sequence; and all of this at least two different speeds."

"Have overlay capability."

Circuit control was mentioned by several field specialists as a critical requirement. Currently, the majority of FSS's receiving satellite products are serviced via a slave-top from a Weather Service Forecast Office (WSFO) or an Air Route Traffic Control Center (ARTCC).

6. HOW DOES THE QUALITY OF THE PICTURES DISPLAYED IN THE CRT AND TV MONITOR COMPARE WITH THE QUALITY OF THE PICTURES FROM THE LASERFAX?

Of the forty-six evaluators, twenty-three (50 percent) said it was worse, seven (15.2 percent) better, ten (21.7 percent) about equal, two (4.3 percent) did not have a preference, and four (8.7 percent) did not respond.

It was stated that when looking at a single image (picture), the quality was better than on the Laserfax. It was more difficult to determine fine shade differences on the CRT. It was suggested that a change in the CRT phosphor from green to grey (black/white) would improve the present display. (This comment only applies to initial in-house test; the field test-bed utilized only the black/white display.) The CRT picture seemed to quiver slightly, causing some eyestrain when viewed closely. It should be noted that these comments relate to individual or single picture quality, not the overall evaluation of the GOES System. Pertinent comments by field specialists were:

"The Laserfax is of a higher quality."

"The quality of both products is good. There is some loss of contrast and clarity in the CRT/TV monitor." (Display operating techniques were demonstrated to the user that were found advantageous in improving quality of CRT displayed images — see next comment.)

"About the same except the brightness and contrast features do permit bringing up some weak features from time to time on machine display."

"Obviously not as sharp, but with TV or CRT properly maintained and adjusted there doesn't seem to be a problem. Also, there is little ability to zoom off of the Laserfax picture."

7. WHAT IS YOUR PREFERENCE AS A DISPLAY MEDIUM — THE CRT OR THE TV MONITOR — AND WHY?

Of those who responded, the CRT was preferred over the TV monitor due to picture quality, controlability, and resolution (32 to 3, with 3 having no preference).

"The CRT had the ability for finer detail."

"The TV monitor was too blurry and cannot be read."

"The CRT can be controlled. The TV is not."

8. DOES COLOR ENHANCE OR DETRACT FROM THE USABILITY OF THE WEATHER PRODUCT WHEN COMPARED TO STANDARD BLACK AND WHITE DISPLAYS?

Color was preferred by 57.6 percent of the specialists, 24.2 percent expressed no difference, and 18.2 percent preferred black and white. Color provided certain enhancement, but black and white was preferred for clarity and detail. (Note: Color displays were not available for evaluation this time. The question was posed hypothetically.)

"Color would enhance most any product, particularly one of which densities are heightened."

"Color provides a more dramatic image and is easier for the mind to visualize."

"Enhances greatly — this would be an invaluable tool for face-to-face briefings."

"There are too many shades of gray. IR color enhanced would be an improvement."

9. WHAT OTHER WEATHER PICTORIAL OVERLAY WOULD BEST SUPPLEMENT THE INFORMATION ON THE SATELLITE IMAGES?

Specialists want to have an overlay capability on the GOES maps. They would like to select the type of overlay to suit the briefing requirement. Overlays most often mentioned were surface analysis, radar summary, and the 200-300-500 MB charts.

"A pictorial display of IFR conditions."

"Weather radar with color intensity."

"Ability to overlay surface analysis, etc., for exact frontal positioning in relation to cloud bands."

10. WHAT IS YOUR REACTION TO THE ZOOMING CAPABILITY OF THE SYSTEM? WHAT PORTION OF THE PRODUCT SHOULD BE DISPLAYED?

A zoom capability was favored by 38 of the evaluating specialists. Only 2 were not favorable toward the zoom feature. The zoom feature was noted to be especially beneficial for special terrain such as mountainous areas. It would also be beneficial for special weather situations such as thunderstorm buildups. The preference was for the ability to zoom in on any sector of the satellite picture that was available, and then have the capability to go back to regular image size.

"...a better look at buildups, wind shear, etc."

"Good for hazardous weather observation, control must be accessible."

"Without zoom you lose a major system capability and use."

Finally, even though highly favored, the test-bed system presented difficulties in utilizing this system feature. One specialist from the SEA FSS brought it into perspective. "In its present form it is cumbersome and difficult to use as we must contact the Weather Service Forecaster at the SEA ARTCC CWSU and coordinate type and product as we do not have selection capability."

11. THE SPECIALISTS WERE ASKED IF THEY HAD A PREFERENCE FOR SEQUENCING RATE, DEGREE, I.E., TIME LAPSE AND PREFERRED IMAGE TYPE (DIGITALLY ENHANCED INFRARED IMAGE OR A STANDARD VISUAL PRODUCT).

The consensus of the group indicated a medium-to-slow sequencing rate on the order of four frames per second. The choice of product was for an infrared image. Finally, a clear choice of 3, 6, 12, or 24-hour time lapsing could not be determined in this evaluation. A data summary to this question is as follows:

| 1. SPEED | NUMBER WHO RESPONDED | PERCENTILE |
|---|---|---|
| Fast | 2 | 4.8 |
| Medium | 17 | 40.5 |
| Slow | 23 | 54.8 |

2. DEGREE OF SEQUENCING PREFERRED

| | NUMBER WHO RESPONDED | PERCENTILE |
|---|---|---|
| 3-hr Time Lapsing | 11 | 27.5 |
| 6-hr Time Lapsing | 14 | 35.0 |
| 12-hr Time Lapsing | 9 | 22.5 |
| 24-hr Time Lapsing | 6 | 15.0 |

3. EASIER TO WORK WITH

| | NUMBER WHO RESPONDED | PERCENTILE |
|---|---|---|
| Digitally Enhanced | 22 | 68.8 |
| IR Images Standard (Visual) Images | 10 | 31.3 |

APPENDIX C

GOES SYSTEM FINAL INTERVIEW QUESTIONNAIRE

SPECIALIST TRAINING/QUALIFICATIONS:

EFAS Training: Yes ____ No ____

Are You Currently Certified?
Approximate Time Used

GOES Training: Yes ____ No ____

Are You Presently Using These Products?
Approximate Time Used

Automation Experience: FSS Facility _____

Manual (Non-Automated) _____
Service A _____
MAPS _____
AWANS _____

1. DO YOU FEEL THAT THE VARIOUS IMAGE TYPES AND MOVEMENTS OF THOSE IMAGES ARE AN AID TO EFFICIENT BRIEFINGS?

2. DO YOU THINK THAT ANY IMAGE TYPES ARE EXCESSIVE OR REDUNDANT, SUCH AS COMBINING VISUAL AND INFRARED?

3. WOULD THIS SYSTEM, OR A SIMILAR SYSTEM, ADD TO YOUR ABILITY TO SELF-BRIEF?

4. WHAT COMMENTS, IF ANY, WOULD YOU MAKE REGARDING THE AMOUNT OF INFORMATION THAT IS DISPLAYED ON THE SCREEN AT ONE TIME?

5. IF YOU HAD A ZOOM CAPABILITY, WHAT WOULD BE YOUR PREFERENCES; I.E., A 400-600 MILE RADIUS, OR WHAT? ALSO, WOULD YOU LIKE THIS DISPLAYED; I.E., ABILITY TO SELECT THE AREA OF THE COUNTRY YOU WANT?

6. IS THERE ANYTHING YOU WANT TO ADD OR COMMENT ON?

## APPENDIX D

## RESPONSES TO THE GOES SYSTEM FINAL INTERVIEW QUESTIONNAIRE

1. DO YOU FEEL THAT THE VARIOUS IMAGE TYPES AND MOVEMENTS OF THOSE IMAGES ARE AN AID TO EFFICIENT BRIEFINGS?

Of the 46 evaluators, 42 indicated the GOES images were an aid to more efficient briefings. Only four specialists were negative in their response to this item. The most significant negative comment was "that without adequate knowledge (i.e., formal classroom training) of image interpretation, it would be difficult to use GOES products for more than general briefing or to basically self-brief."

Among the noteworthy favorable comments were the following:

"The movements over a fixed outline are an aid to over-the-counter, face-to-face briefings."

"Clearly shows how (the) system is developing and moving."

"Yes, particularly at the EFAS position."

"Pilots are impressed when shown the system for the first time. Picture is much better than trying to convert a picture to words."

"This (GOES images) fills in the gaps between the reporting points."

"Yes, the sensation of movement is very helpful, especially for briefing and timing purposes (i.e., estimating frontal passage times and the like)."

"Yes, very much so! Pilots have more confidence in briefing when I have a better understanding."

2. DO YOU THINK THAT ANY IMAGES ARE EXCESSIVE OR REDUNDANT, SUCH AS COMBINING VISUAL AND INFRARED?

On the point of being excessive or redundant, 23 responded no, 4 yes, and of the two image types, it was felt that infrared was the better product. What was not desired was having the infrared (IR) and visual on the same loop.

A negative comment alluded to "confusion in reading. Your eyes are constantly trying to adjust to the various combinations and/or areas." Another negative input was "don't like both modes at one time."

Positive comments reflecting a general opinion were the following:

"Like the capability to select either."

"Both are useful and give a better picture when used together."

"Good when both are the same resolution."

3. WOULD THIS SYSTEM, OR A SIMILAR SYSTEM, ADD TO YOUR SELF-BRIEF?

No one commented to the negative in response to this question; 41 were in agreement that it would add to one's ability to self-brief (add to but not substitute for a complete preduty briefing). The animated system "sticks in your mind better" and, as one specialist succinctly stated: "The difference is sort of like trying to explain a cartoon compared to watching an animated version of the same cartoon." Other general comments were:

"Yes, definitely! In an automated environment this would be the only system with stored historical weather data (i.e., old weather)."

"Get movement of systems and you can almost tell the speed of system movements."

"It is the first thing I look at when I come in. With this equipment you see the systems at a glance, and then you go into more depth."

"Very good in self-briefing to see certain activity developing such as thunderstorms, severe weather, squall lines, mountain wave from the N.Y. Adirondacks."

"Yes, when used in conjunction with a good synopsis surface analysis and upper air chart."

"Yes, absolutely, one of the system's best features."

"Definitely, see gaps between (weather reporting) points."

"Yes, especially when you are off for a few days. It gets you backup to speed. Pictures tell more than words would. They enhance the words, better trending. Gives you a 3-D look."

"Enhances one's ability to self-brief and does it much quicker."

"The animation does it! You watch and see the movement. It puts reality into the situation."

4. WHAT COMMENTS, IF ANY, WOULD YOU MAKE REGARDING THE AMOUNT OF INFORMATION THAT IS DISPLAYED ON THE SCREEN AT ONE TIME?

The information was adequate and very appropriate to specialists' needs within an FSS. Suggestions were made to add color enhancements and overlay maps. One excellent observation made regarding the information displayed was the ability, using GOES imagery, of interpreting weather between reporting points (especially thunderstorm activity). Other selected comments were:

"Would like to see a mapper system (overlay) displaying not only the outline of the states but including major airways."

"Using the sector feature eliminates unwanted data."

"Would like to add a surface analysis overlay. System would then be several tools in one."

"Would like to be able to control the functions displayed."

"Would like to see the overall picture first and then be able to zoom in on an area such as thunderstorm development, talk, and relate to that; then go back to the overall general picture."

"Ability to overlay. Geographic overlays would be good plus showing airport locations. Also overlay IFR, VFR, and MVFR areas (weather depiction analysis), if this could be done."

"In an operational mode, overlays of forecast, upper air, and surface charts would be a great step forward."

"Overlay a color enhancement may be helpful. I would be very happy just to keep exactly what we have. Don't take it away!"

5. IF YOU HAD A ZOOM CAPABILITY, WHAT WOULD BE YOUR PREFERENCE; E.G., A 400-600 MILE RADIUS? ALSO, WOULD YOU LIKE THIS DISPLAYED; I.E., ABILITY TO SELECT THE AREA OF THE COUNTRY YOU WANT?

Responses tended to be rather broad with the range of zoom capability of 200 to 1,000 miles. Specialists indicated a large range due to their specific requirements during a particular route briefing. The ability to select the area of the country they desired and the adjustable zoom feature were features highly desired by all specialists. Statistical results of thoses where responded were as follows:

ZOOM CAPABILITY PREFERENCES

| Miles | Total | Percentile |
|---|---|---|
| 200 | 2 | 5.9 |
| 300 | 1 | 2.9 |
| 400 | 5 | 14.7 |
| 500 | 1 | 2.9 |
| 600 | 6 | 17.6 |
| 1,000 | 1 | 2.9 |
| Selectable | 18 | 52.9 |

Other comments relating to the zoom capability were:

"A zoom capability would improve the briefing application of the equipment. More information would be available to the pilot."

"Selective area ability (zoom) would be a great aid in long distance pilot weather briefings."

"Adjustable zoom and movable per geographic location desired."

"Would be nice if the cost factor was justified. In normal day to day operations could do without it. Don't want to lose the whole system by trying to make it too fancy."

"Zoom is nice to know rather than need to know."

"Zoom excellent to our (Seattle area) application. Valleys and mountain passes being of primary concern for example."

"Would like to go out of our area (Seattle). Would like the system to go to other areas such as the Gulf of Alaska (to see that weather and its influence on us now and in the future)."

"In the Pacific Northwest the greater distance would be advantageous. Selective areas. . .would further improve briefing technique."

6. IS THERE ANYTHING YOU WANT TO ADD OR COMMENT ON?

This question became an open forum during the interview, and specialists were able to respond broadly to the prototype system and the machine display of Satellite Imagery information. Several comments are worthy of note and emphasis:

"Satellite Imagery is a tool to be used with other weather informational products for overall effectiveness. I would like to see a way to add more information to GOES Products. I would like to see an overlay capability; the animation capability is tremendous. I prefer the step feature in animation because it allows you to work at your own rate. I definitely prefer a pace you can control; namely, slow speed and step forward and back. I am most impressed with the animation feature, especially for trending. I also like the 'both' function. The 'still' function is also good, it gives you the most current visual or infrared picture. The capabilities of the system are especially good in the summertime during thunderstorm activity and squall-line development. This is where the trending function is good; with hardcopy, the map must be passed around as needed (only one copy), and if it is misplaced, damaged, etc., everyone is out of information; but with the CRT display, GOES Imagery is available to all positions, thus, a most important consideration for me in my facility."

"I would like more control of the picture received by me and the information it tells me and not (have to) depend on what the weather people send me. Also, too much room lighting detracts from picture clarity and quality in the set up here (Boston FSS)."

"Need training to use the equipment properly."

"Test equipment is too sensitive and needs improvement. Also, I feel live (weather) radar is the first priority for EFAS (not GOES ex)."

"Need the equipment at all positions not just In-Flight/EFAS. EFAS specialists tend to brief locally, others (preflight) do more long distance. GOES display is, thus, a good aid to all briefing positions, not just EFAS, and so should be available at all positions."

"What's needed is the display with hardcopy printout capability."

"The equipment is best used in conjunction with other tools."

"The primary objective is to interface GOES data with a computer controlled system together with a requirement to look at alternative approaches to accomplish the task and how best to do it."

"I would recommend a system that you could enter keyboard data to select what you want. For example: enter IR, 2 miles, last 6 hours, and then get your specific individualized request. As it now exists the system is too restrictive, whereas, this feature would make it more flexible."

"We need this (system) at the briefing counter for the pilots to see."

"Each position should have selective capability without interfering with another position use. Also, would like to see pictures every 15 minutes, not 30 minutes, so as to use as an effective tool. Thus, you would see valleys, passes, and coastal fog better and changes quicker."

"When can we expect this system in the field?"

"The number of images stored can be reduced to make room for overlays."

"Have all the same resolutions appear, then change to a sequence of the next resolution instead of the image resolution changing all the time (confusing)."

"Improve system (CRT image) sharpness and clarity."

"System is most useful to low altitude or jet pilots, so to forewarn them before its too late; especially icing conditions. The Laserfax (hardcopy) is too cumbersome and you just can't get the picture like the GOES movement demonstrates."

"Another important point, shadows show what hardcopy can't by means of FSS operator manipulation of the brightness controls. (You) have shadows in Laserfax, but not to the degree of clarity that the IPS GOES system can demonstrate."

"Used to tell pilots of a dangerous situation right now, and gives him the information he needs now. It gives him the options he needs, not just to save him after the emergency develops."

"A main point of the system is to make the specialist aware of a presently occurring weather situation. He sees it, looks at the forecast, if there is a dilemma he calls the Weather Bureau Forecaster to discuss the situation. (Thus) you see situations develop much more rapidly, you then can discuss with forecaster and have much more time then you had in the past. An FSS specialist in Seattle sees a potential problem or situation 100 miles to the west (with IPS GOES System), and can then better forecast exactly when it will be over Seattle. We're looking at the now weather, and so can better forecast when a situation will be here, there, or whenever.

"The animation (feature) is fantastic. You can retain the information a lot longer. The more you watch it, the more you get out of it. The slightest change shows up immediately and you can evaluate this new input (change) right away."

## APPENDIX E

## SUMMARY OF INTERVIEW AND QUESTIONNAIRE RESPONSES

1. The system movement; i.e., animation feature, was the most highly praised and desired features for use in pilot briefings and is preferred over Laserfax hardcopy.

2. Individual control of frame (image) speed is essential for optimum system utilization.

3. A selectable zoom, specialist controlled, would be highly desired but not essential for use in pilot briefings.

4. Finally, the system design appeared to be evaluated more often then the system concept. That is, specialist questionnaire and interview responses relative to the test-bed installation overshadowed comments pertaining to the system concept. Reaction from FSS specialists, as well as WSFO personnel (collocated with the FSS), indicated high acceptance of the system and a desire for accelerated field installation, so that the system — even in its current simplified form — can be utilized now.

# APPENDIX F

## RECOMMENDATIONS BASED ON SPECIALISTS INTERVIEWS

1. Dedicated line to the FSS.

2. Individual request feature to make the system more flexible; i.e., key in IR, 2-mile resolution, last 6 hours enter. This feature would allow greater system flexibility.

3. Implementation of the existing simplified animated system, if the addition of the sophisticated zoom and overlay enhancements would make the overall system cost prohibitive or substantially delay implementation time to field facilities.