COPY 1

DOT/FAA/PM-83/16

Program Engineering &
Maintenance Service
Washington, D.C. 20591

Computer B (National Airspace System— Automated Radar Terminal Systems) Communications Support

Contel Information Systems
11781 Lee Jackson Memorial Highway
Fairfax, Virginia 22030

TECHNICAL CE
ATLANTIC CI

March 1983

Final Report

This document is available to the U.S. public through the National Technical Information Service, Springfield, Virginia 22161.

U.S. Department of Transportation
Federal Aviation Administration

NOTICE

This document is disseminated under the sponsorship of the Department of Transportation in the interest of information exchange. The United States Government assumes no liability for its contents or use thereof.

Technical Report Documentation Page

1. Report No.	2. Government Accession No.	3. Recipient's Catalog No.
DOT/FAA/PM-83/16		

4. Title and Subtitle	5. Report Date
Computer B (National Airspace System - Automated Radar Terminal Systems) Communications Support	March 1983
	6. Performing Organization Code
7. Author(s)	8. Performing Organization Report No.
E. Heilberg	FR.341.03.01R1
9. Performing Organization Name and Address	10. Work Unit No. (TRAIS)
Contel Information Systems 11781 Lee Jackson Memorial Highway Fairfax, VA 22033	11. Contract or Grant No. DOT-FA79WA-4355
12. Sponsoring Agency Name and Address	13. Type of Report and Period Covered
U.S. Department of Transportation Federal Aviation Administration Program Engineering and Maintenance Service Washington, D.C. 20590	Final Report 1985-1988
	14. Sponsoring Agency Code FAA/APM-510

15. Supplementary Notes

16. Abstract

An analysis has been performed to determine the most cost/beneficial approach to the support of Computer B (NAS-ARTS) communication in the period from 1985-1988. The identified approach would multiplex NAS-ARTS, FDIO, and possibly other communications between ARTCCs and terminal areas, such as Mode S data link traffic, onto voice grade leased line trunks. This approach would provide significant cost savings, increase NAS-ARTS throughput potential, and improve system flexibility.

17. Key Words		18. Distribution Statement
Data Communications	NADIN	Document is available to the U.S. public through the National Technical Information Service, Springfield, VA 22161.
Requirements Analysis	Computer B	
Cost-Benefit Analysis	NAS-ARTS	
Multiplexing	FDIO	

19. Security Classif. (of this report)	20. Security Classif. (of this page)	21. No. of Pages	22. Price
Unclassified	Unclassified	136	

Form DOT F 1700.7 (8-72) Reproduction of completed page authorized

METRIC CONVERSION FACTORS

Approximate Conversions to Metric Measures

Symbol	When You Know	Multiply by	To Find	Symbol
		LENGTH		
in	inches	*2.5	centimeters	cm
ft	feet	30	centimeters	cm
yd	yards	0.9	meters	m
mi	miles	1.6	kilometers	km
		AREA		
in^2	square inches	6.5	square centimeters	cm^2
ft^2	square feet	0.09	square meters	m^2
yd^2	square yards	0.8	square meters	m^2
mi^2	square miles	2.6	square kilometers	km^2
	acres	0.4	hectares	ha
		MASS (weight)		
oz	ounces	28	grams	g
lb	pounds	0.45	kilograms	kg
	short tons (2000 lb)	0.9	tonnes	t
		VOLUME		
tsp	teaspoons	5	milliliters	ml
Tbsp	tablespoons	15	milliliters	ml
fl oz	fluid ounces	30	milliliters	ml
c	cups	0.24	liters	l
pt	pints	0.47	liters	l
qt	quarts	0.95	liters	l
gal	gallons	3.8	liters	l
ft^3	cubic feet	0.03	cubic meters	m^3
yd^3	cubic yards	0.76	cubic meters	m^3
		TEMPERATURE (exact)		
°F	Fahrenheit temperature	5/9 (after subtracting 32)	Celsius temperature	°C

*1 in = 2.54 (exactly). For other exact conversions and more detailed tables, see NBS Misc. Publ. 286, Units of Weights and Measures, Price $2.25, SD Catalog No. C13.10:286.

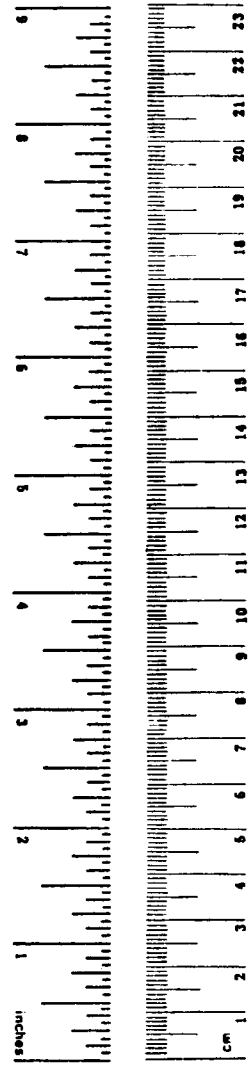

Approximate Conversions from Metric Measures

Symbol	When You Know	Multiply by	To Find	Symbol
		LENGTH		
mm	millimeters	0.04	inches	in
cm	centimeters	0.4	inches	in
m	meters	3.3	feet	ft
m	meters	1.1	yards	yd
km	kilometers	0.6	miles	mi
		AREA		
cm^2	square centimeters	0.16	square inches	in^2
m^2	square meters	1.2	square yards	yd^2
km^2	square kilometers	0.4	square miles	mi^2
ha	hectares (10,000 m^2)	2.5	acres	
		MASS (weight)		
g	grams	0.035	ounces	oz
kg	kilograms	2.2	pounds	lb
t	tonnes (1000 kg)	1.1	short tons	
		VOLUME		
ml	milliliters	0.03	fluid ounces	fl oz
l	liters	2.1	pints	pt
l	liters	1.06	quarts	qt
l	liters	0.26	gallons	gal
m^3	cubic meters	35	cubic feet	ft^3
m^3	cubic meters	1.3	cubic yards	yd^3
		TEMPERATURE (exact)		
°C	Celsius temperature	9/5 (then add 32)	Fahrenheit temperature	°F

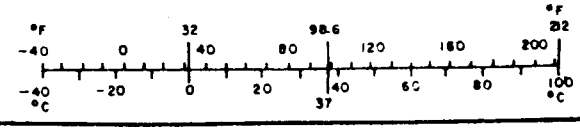

60 mph = 52.1 knots (nautical miles per hour)
60 mph = 88'/sec 1g = 32.2'sec^2

1 mph = .87 knots
1 knot - 1.15 mph

PREFACE

The National Airspace Data Interchange Network (NADIN) is being developed, in its initial phases, as a common data communications network that will integrate various FAA communications services, specifically those involved in the exchange of information pertaining to air traffic control. The initial design was specifically directed to the absorption of the Aeronautical Fixed Telecommunication Network (AFTN), NASNET, and most of Service B. The design also provided for the expansion of NADIN facilities and circuits so as to accommodate growth, in terms of requirements for both included services and additional services.

Concurrently with efforts to implement the initial NADIN design, efforts have been directed to the analysis of other services that might be integrated into NADIN. These analyses have two major objectives. First, they are to determine if the integration of the specific service into NADIN is cost/beneficial. Second, they are to determine the specific enhancements to NADIN that would be required to absorb that service. These efforts have already led to the modification of the NADIN specification to include communications support for the Flight Service Automation System (FSAS), Flight Data Input/Output (FDIO) equipment, Automated Flow Control (AFC), and the National Flight Data Center Information System (NFDC/IS). Current FAA plans call for NADIN to be operational in late 1983.

Studies of further possible enhancements are continuing. This report documents such an analysis conducted with respect to the Computer B (NAS-ARTS) service.

TABLE OF CONTENTS

		PAGE No.
SECTION 1 - INTRODUCTION		
1.1	Purpose and Scope	1-1
1.2	Summary of Results	1-1
1.3	Background	1-2
1.4	Study Approach	1-3
SECTION 2 - COMMUNICATIONS ENVIRONMENT AND REQUIREMENTS		
2.1	Introduction	2-1
2.2	Communications Environment	2-2
	2.2.1 Communications Overview	2-2
	2.2.2 Communications Systems	2-6
	2.2.3 Other ATC Facility Changes	2-16
2.3	Strategic Requirements	2-17
	2.3.1 Objectives	2-18
	2.3.2 Policy	2-18
	2.3.3 Cost Considerations	2-18
2.4	Tactical Requirements	2-19
	2.4.1 System Configuration	2-19
	2.4.2 Message Traffic	2-21
	2.4.3 Transmission Delays	2-23
	2.4.4 Availability/Reliability	2-23

TABLE OF CONTENTS (Continued)

		PAGE NO.
SECTION 3 - IDENTIFICATION OF ALTERNATIVES		
3.1	Introduction	3-1
3.2	Discussion	3-1
	3.2.1 Transmission Facility Utilization	3-1
	3.2.2 Multiplexing/Concentration	3-3
	3.2.3 Communications Control	3-5
	3.2.4 The NADIN Nodes	3-7
3.3	Description of Alternatives	3-10
	3.3.1 Alternative 1, The Current Approach	3-10
	3.3.2 Alternative 2, The Current Approach with TDMs/STATMUXs	3-12
	3.3.3 Alternative 3, The Local Switching Approach with TDMs/STATMUXs	3-14
	3.3.4 Alternative 4, The Local Switching Approach with Concentrators	3-15
SECTION 4 - ANALYSIS OF ALTERNATIVES		
4.1	Introduction	4-1
4.2	Cost Analysis	4-1
	4.2.1 General Considerations	4-1
	4.2.2 Cost Elements	4-4
	4.2.3 Cost Calculations	4-7
4.3	Performance Analysis	4-11

TABLE OF CONTENTS (Continued)

		PAGE No.
SECTION 4 - ANALYSIS OF ALTERNATIVES (Continued)		
	4.3.1 Network Delays	4-14
	4.3.2 Availability	4-18
4.4	Other Considerations	4-20
	4.4.1 Throughput	4-20
	4.4.2 Accuracy	4-21
	4.4.3 Flexibility	4-21
	4.4.4 Impact on Center Computer Resources	4-22
	4.4.5 Requirements of Other FAA Programs	4-23
SECTION 5 - OVERALL COMPARISON		
5.1	Introduction	5-1
5.2	Areas of Comparison	5-1
5.3	Evaluation	5-2
5.4	Conclusions and Recommendations	5-6
APPENDIX A - NAS-ARTS MESSAGE TRAFFIC PROJECTIONS		
APPENDIX B - MULTIPLEXING TRAFFIC FROM SEVERAL ARTS SITES		
APPENDIX C - LIST OF REFERENCES		

LIST OF FIGURES

FIGURE		PAGE NO.
1	Typical Transfer of Control	2-3
2	FDEP Communications	2-8
3	FDIO Communications	2-9
4	NAS-ARTS Communications	2-11
5	NADIN Schematic	2-13
6	Possible NADIN P1 Configuration	2-15
7	Example Applications of Multiplexors/Concentrators	3-4
8	NADIN Node Functional Concept	3-9
9	Alternative 1, The Current Approach	3-11
10	Alternative 2, The Current Approach with TDMs/STATMUXs	3-13
11	Alternative 3, The Local Switching Approach with TDMs/STATMUXs	3-16
12	Alternative 4, The Local Switching Approach with Concentrators	3-17

LIST OF TABLES

TABLE		PAGE NO.
1	Distribution of ARTS Sites	2-20
2	NAS-ARTS Message Traffic at Centers	2-22
3	Interexchange Mileage Charges (IXC)	4-5
4	Cost for Alternative 1, The Current Approach	4-8
5	Costs for Alternative 2, The Current Approach with TDMs/ STATMUXs	4-10
6	Costs for the Local Switching Approaches: Alternative 3, with TDMs/STATMUXs, and Alternative 4, with Concentrators	4-12
7	Comparative Costs	4-13
8	Component Availabilities (A)	4-18
9	Major Advantages and Disadvantages of Alternatives	5-3
10	Quantitative Comparisons	5-4
11	Comparative Ratings	5-5

SECTION 1

INTRODUCTION

1.1 Purpose and Scope

This report documents efforts to determine the most cost/beneficial approach for the support of center-to-terminal area Air Traffic Control (ATC) data communications, in general, and Computer B (NAS-ARTS) communications, in particular, during the 1985-1988 timeframe. The study specifically addressed the following questions:

1. Can the National Airspace Data Interchange Network (NADIN) be enhanced to provide cost-effective support to NAS-ARTS communications?

2. If so, what enhancements to NADIN and the NAS-ARTS Network would be optimal?

3. Is the optimal enhancement approach more cost/beneficial than the current approach?

1.2 Summary of Results

The most cost/beneficial approach for the support of data communications between Air Route Traffic Control Centers (ARTCCs) and terminal areas in the 1985-1988 timeframe is to use the leased Computer B (NAS-ARTS) links as shared trunks for NAS-ARTS, Flight Data Input/Output (FDIO) equipment, and other pertinent traffic, possibly including Mode S traffic. This approach would require:

- procurement of a pair of time division multiplexors for each such trunk,

- procurement of higher speed modems for the trunks, and

- reconfiguration of the FDIO multipoint circuits.

The cost of implementing this approach would be more than offset by the savings in FDIO communications costs alone. Further this approach will provide for increased NAS-ARTS throughput and general flexibility. The only disadvantage of this approach compared to the current, dedicated line approach would be a slight reduction in availability.

Use of local switching to support NAS-ARTS communications was found to be feasible, but not as attractive as the approach outlined above for the 1985-1988 timeframe. The major drawback to the use of local switching is that the major potential benefits cannot be realized until the center ATC computer can be given an X.25 packet level interface to NADIN. It appears unlikely that such modifications to the ATC computer would be implemented before 1988.

The recommendations presented above were derived from analyses that focused on NAS-ARTS and FDIO communications. Multiplexing other traffic, especially Mode S, onto the same trunks would introduce additional bandwidth requirements. (These are being addressed under Task 8 of the contract.) Nevertheless, the basic recommendations above should continue to apply.

1.3 Background

The efforts reported here were carried out by Contel Information Systems for the Federal Aviation Administration (FAA) as Task 3 under FAA Contract DOT-FA79WA-4355. The objectives of this contract are to determine the feasibility and desirability of enhancing NADIN so as to support a variety of data communications services not included as part of the initial NADIN design, and to identify the technical approaches to be incorporated in such enhancements. Results of earlier tasks under the contract are being reflected in specifications for the initial NADIN implementation (expected to be operational in late 1983).

In December 1981, FAA published the National Airspace System Plan. The plan calls for a major enhancement to NADIN (referred to as the Phase 1 Enhancement or NADIN P1) starting in 1985. The enhancement involves the evolution of NADIN, currently a message switch network, into a combined packet switch/message switch network, as suggested under Task 2 of the contract. Design details for such an enhancement are currently being developed under Task 13.

Efforts related to earlier tasks considered enhancements to the initial NADIN design. Although Task 3 was initiated early in 1981, it became obvious that any enhancement of NADIN to support NAS-ARTS communications would have to be part of NADIN P1 or later enhancements. As a result, the baseline considered in this study was changed from the initial NADIN to the concept for NADIN P1. Since the details for that concept have not yet been developed, requirements for NADIN support to NAS-ARTS communications could only be addressed in general terms.

1.4 Study Approach

In order to determine the most cost/beneficial approach for the support of NAS-ARTS communications, a four-step analysis methodology was employed. These steps are identified below. The efforts and results associated with each step are presented in subsequent sections as noted.

Step 1. Identification of the environment and requirements associated with NAS-ARTS communications (Section 2).

Step 2. Identification of alternative approaches for meeting the requirements (Section 3).

Step 3. Analysis of the individual alternatives (Section 4).

Step 4. Comparative evaluation of the alternatives (Section 5).

SECTION 2

COMMUNICATIONS ENVIRONMENT AND REQUIREMENTS

2.1 Introduction

As a first step in the analysis of approaches for the support of NAS-ARTS communications, a requirements profile was developed. The profile includes the following three components. Each is presented in a separate subsection, as indicated.

Communications Environment (Section 2.2). This section presents an overview of the data communications between ARTCCs and approach control facilities, including the NAS-ARTS communications. It addresses both the current facilities and proposed modifications.

Strategic Requirements (Section 2.3). This section identifies the qualitative requirements that would apply to any communications utility being considered to serve the NAS-ARTS functions. These requirements, which provide scope and direction to the identification of acceptable communications alternatives, include such considerations as pertinent policies, timeframe, applicable technology, and cost comparison approach.

Tactical Requirements (Section 2.4). This section identifies the quantitative requirements that would apply to any communications utility being considered to serve the NAS-ARTS functions. These requirements, which govern the development of details for acceptable communications alternatives, include such considerations as connectivity, message traffic characteristics, and system performance. Analyses performed to develop some of the tactical requirements are presented in Appendix A.

Information sources used to develop this requirements profile are referenced by number throughout the text and in Appendix A. A correspondingly numbered list of referenced materials is included as Appendix C.

2.2 Communications Environment

The National Airspace System (NAS) includes two major computer systems to assist in its Air Traffic Control (ATC) functions. One system, consisting of NAS 9020 computers located at Air Route Traffic Control Centers (ARTCCs), is used to process data for all flights operating under instrument flight rules (IFR), and to assist in the control of these flights when in the enroute airspace. The other system, consisting of Automated Radar Terminal System (ARTS) computers located at approach control facilities (IFR rooms, TRACONs, TRACABs, RAPCONs, and RATCCs) in major terminal areas, is used to assist in the control of flights in the terminal area airspace.

Some ARTS computers, i.e., those in the busier terminal areas, have been equipped with direct data communications to the NAS 9020 computers at associated ARTCCs. These communications links provide for the exchange of flight plan and track data to facilitate transfer of control. FAA plans call for the upgrading of terminal area radar systems at other sites to include similar computer-to-computer communications.

The direct communications service between the NAS 9020 and ARTS computers is currently provided by the Computer B (NAS-ARTS) Network. This network is actually a series of 20 separate subnetworks, with the NAS 9020 computer at each of the 20 CONUS ARTCCs serving as the hub for its associated ARTS computers. This network is highly effective in that it provides for the reliable, accurate, and responsive exchange of data required for ATC purposes. It does, however, place a relatively heavy communications overhead on the NAS 9020 computers.

2.2.1 Communications Overview

The NAS-ARTS Network is only one element of the ATC communications subsystem used to transfer control of IFR flights between controllers at ARTCCs and terminal area approach control facilities. The communications used to transfer control when a flight crosses the boundary between the two involves combinations of voice, manual input of data messages via keyboard devices, and automatic generation of data messages by computers.

Whenever control of an IFR aircraft is transferred between an ARTCC and an approach control facility, there is a basic requirement for communications that is independent of the equipment available. Typical communications are outlined below relative to three types of events that require transfer of control (see Figure 1):

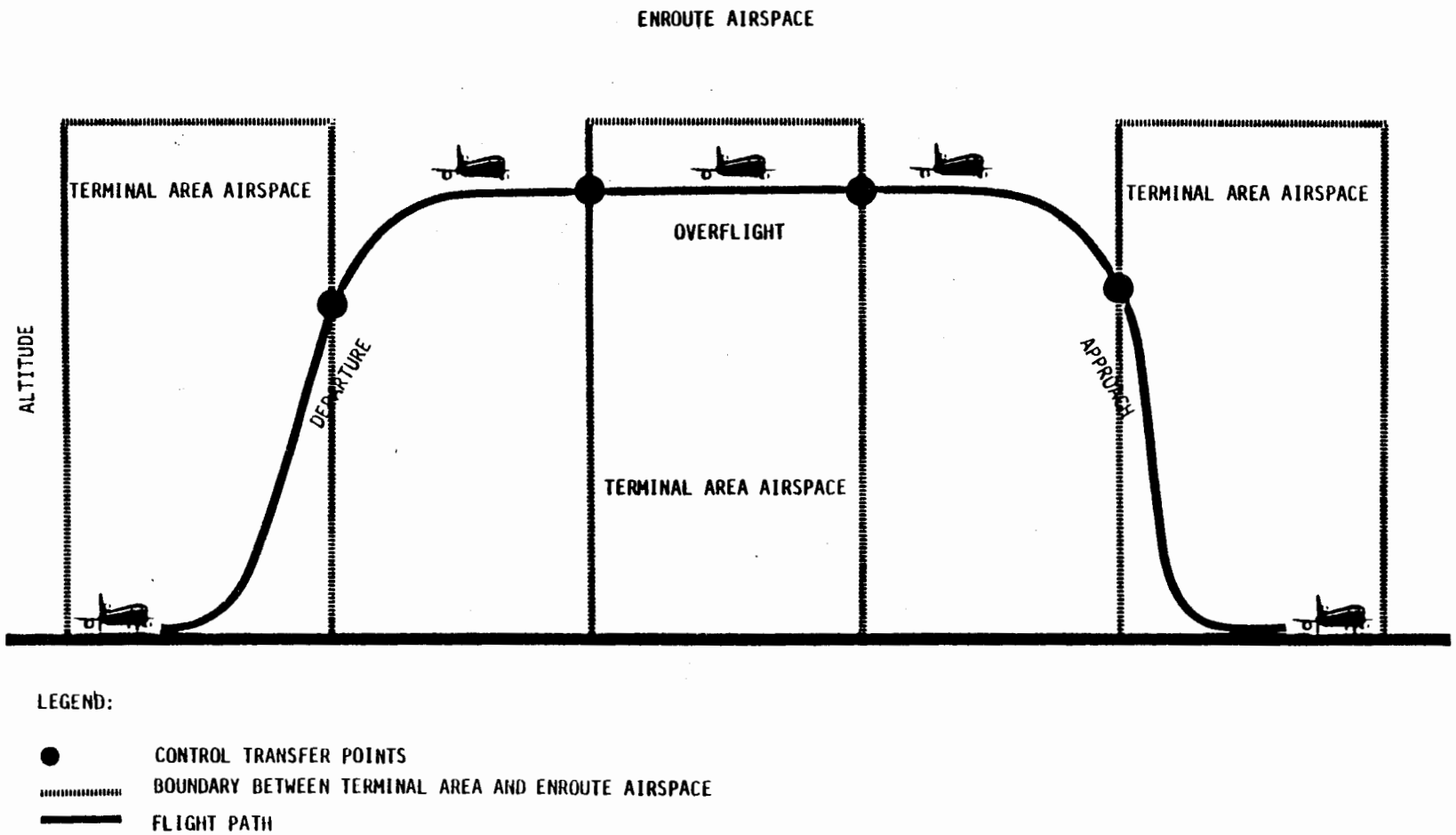

FIGURE 1: TYPICAL TRANSFER OF CONTROL

- departure of an IFR flight from the terminal area airspace after take-off from an airport,

- overflight of a terminal area by an IFR flight, and

- entry of an IFR flight into the terminal area airspace during its approach for landing.

An important element associated with all three events is the IFR flight plan. Prior to the take-off of any IFR flight, a flight plan must be generated and forwarded to the NAS 9020 computer at the ARTCC. There are many ways in which the flight plan can be forwarded to the 9020 computer. Most typically, the flight plan is filed at a flight service station and forwarded to the computer via the Area B network; this does not involve the approach control facility. It is possible, however, for flight plans to be filed by voice or other means with tower or approach controllers. These can then be forwarded to the 9020 computer via keyboard devices (FDEP/FDIO) or indirectly via voice to center personnel for subsequent keyboard entry.

2.2.1.1 Departure Communications

Whenever an IFR flight is to depart a terminal area airspace, the following communications are exchanged between the ARTCC and the approach control facility:

- At prespecified times prior to the flight's planned take-off, the ARTCC (NAS 9020 computer) forwards the flight plan to the approach control facility.

- When the aircraft actually takes off, the approach control facility notifies the ARTCC via a departure message.

- As the flight approaches the terminal area airspace boundary, the approach control facility initiates communications with the ARTCC to effect hand-off of the flight.

2.2.1.2 Overflight Communications

Whenever an IFR flight is to overfly the terminal area airspace, the following communications are exchanged between the ARTCC and the approach control facility:

- At prespecified times prior to the flight's expected arrival in the terminal area airspace, the ARTCC forwards the flight plan to the approach control facility.

- As the flight is about to enter the terminal area airspace, the ARTCC initiates communications with the approach control facility to effect hand-off of the flight.

- As the flight is about to depart the terminal area airspace, the approach control facility initiates communications with the ARTCC to effect hand-off.

2.2.1.3 Approach Communications

Whenever an IFR flight is to land within the terminal area, the following communications are exchanged between the ARTCC and the approach control facility:

- At prespecified times prior to the flight's expected arrival, the ARTCC forwards the flight plan to the approach control facility.

- As the flight is about to enter the terminal area airspace, the ARTCC initiates communications with the approach control facility to effect hand-off.

2.2.1.4 Other Communications

The communications outlined above represent the major required communications between the two facilities to transfer control of IFR flights. The communication equipment may, however, be used for other types of message exchange. Thus, as indicated earlier, flight plans may be sent from terminal area facilities to ARTCCs over the same communications circuits used to support transfer of control.

2.2.1.5 ARTS-ARTS Communications

When two terminal areas are adjacent, a departing flight from one can be handed off to the other. No ARTS-ARTS data communications exist however. Rather, the current NAS-ARTS Network requires that such hand-off communications be routed through the NAS 9020(s) associated with the terminal areas. The message traffic in such a hand-off would be essentially identical to the case where the flight is first handed off to the ARTCC and then from the ARTCC to the second terminal area.

2.2.2 Communications Systems

The systems used to carry out the communications functions outlined above differ from site to site. All approach control facilities have Flight Data Entry and Printout (FDEP) equipment and circuits for the transmission of flight plans from the NAS 9020 to approach controllers. The busier approach control facilities have some version of the Automated Radar Terminal System (ARTS). The busiest facilities have the ARTS III/IIIA equipment which include a communications link to the NAS 9020. This communications link (the NAS-ARTS Network) provides for direct transmission of flight plans and track data between the NAS 9020 computer and the ARTS computer. All approach control facilities also have voice communications with the associated ARTCC.

Current FAA development activities will result in the expansion and upgrading of the current communications systems between the ARTCC and approach control facilities. Major among these are the planned implementation of:

- Flight Data Input/Output (FDIO) System,
- ARTS II enhancements (ARTS-IIA),
- NADIN,
- Mode S Data Link, and
- Sector Suite.

2.2.2.1 FDEP/FDIO

The Flight Data Entry and Printout (FDEP) System provides for direct communications between the NAS 9020 computer at an ARTCC and FDEP printers and keyboards at the busier terminal areas in the ARTCC's area of responsibility. This system is used to exchange flight plans and departure messages, as well as amendments and cancellations for previously transmitted flight plans.

The FDEP service is illustrated in Figure 2. A major component of this system is the Data Communications Control Unit (DCCU). One or more DCCUs are located at each terminal area served, controlling combinations of up to two alphanumeric keyboards (ANKs) and up to three flight strip printers (FSPs). Messages are exchanged with the NAS 9020 computer over dedicated low-speed lines (150 b/s full-duplex service operating at 74.5 b/s half-duplex) using PT&T code. Each DCCU interfaces with the computer through a separate FDEP adaptor port in the computer's peripheral adaptor module (PAM). All polling and circuit control is provided by the NAS 9020 computer. In addition, interconnections between the ANKs and their associated message-forming displays (generally the FSPs) are via the NAS 9020. The DCCU only performs communications functions, e.g., monitoring the status of FSPs and ANKs, responding to polling, handling the communications protocols, inputing and outputing messages received, and basic error checking.

The FDEP System can no longer perform its intended functions satisfactorily. It is too slow, the equipment is unreliable, and the service places too great a demand on limited NAS 9020 resources. As a result FAA will replace the FDEP System as part of the Flight Data Input/Output (FDIO) Equipment Replacement Program. The resulting FDIO System will perform essentially the same functions as FDEP, but will do so in a more efficient, responsive, and reliable manner.

Figure 3 illustrates the FDIO System. The major elements include:

- replacement alphanumeric keyboards (RANKs), replacement flight strip printers (RFSPs), and cathode-ray tube (CRT) displays to provide more responsive and reliable data terminal service,

- remote control units (RCUs) to replace the DCCUs in the terminal areas and assume input editing functions now performed by the NAS 9020,

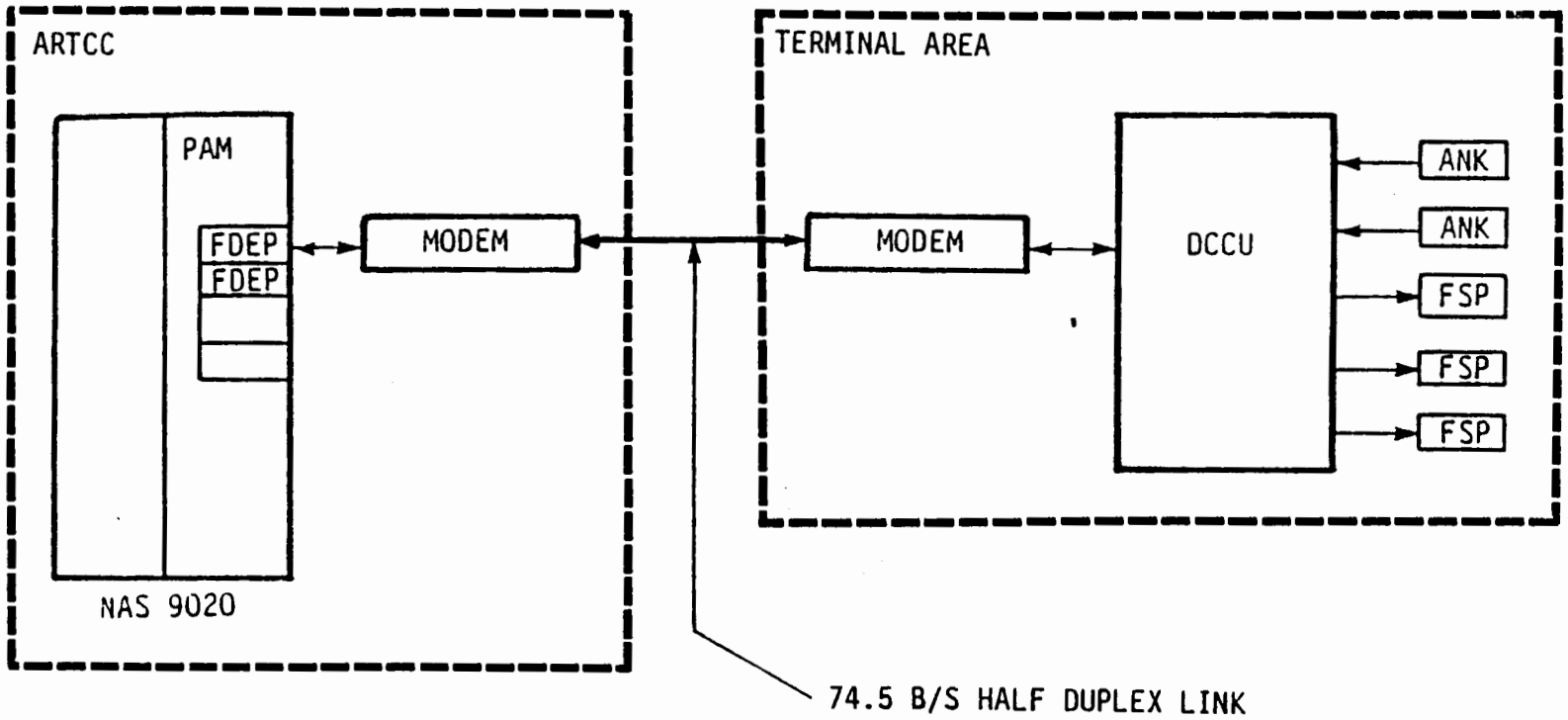

FIGURE 2: FDEP COMMUNICATIONS

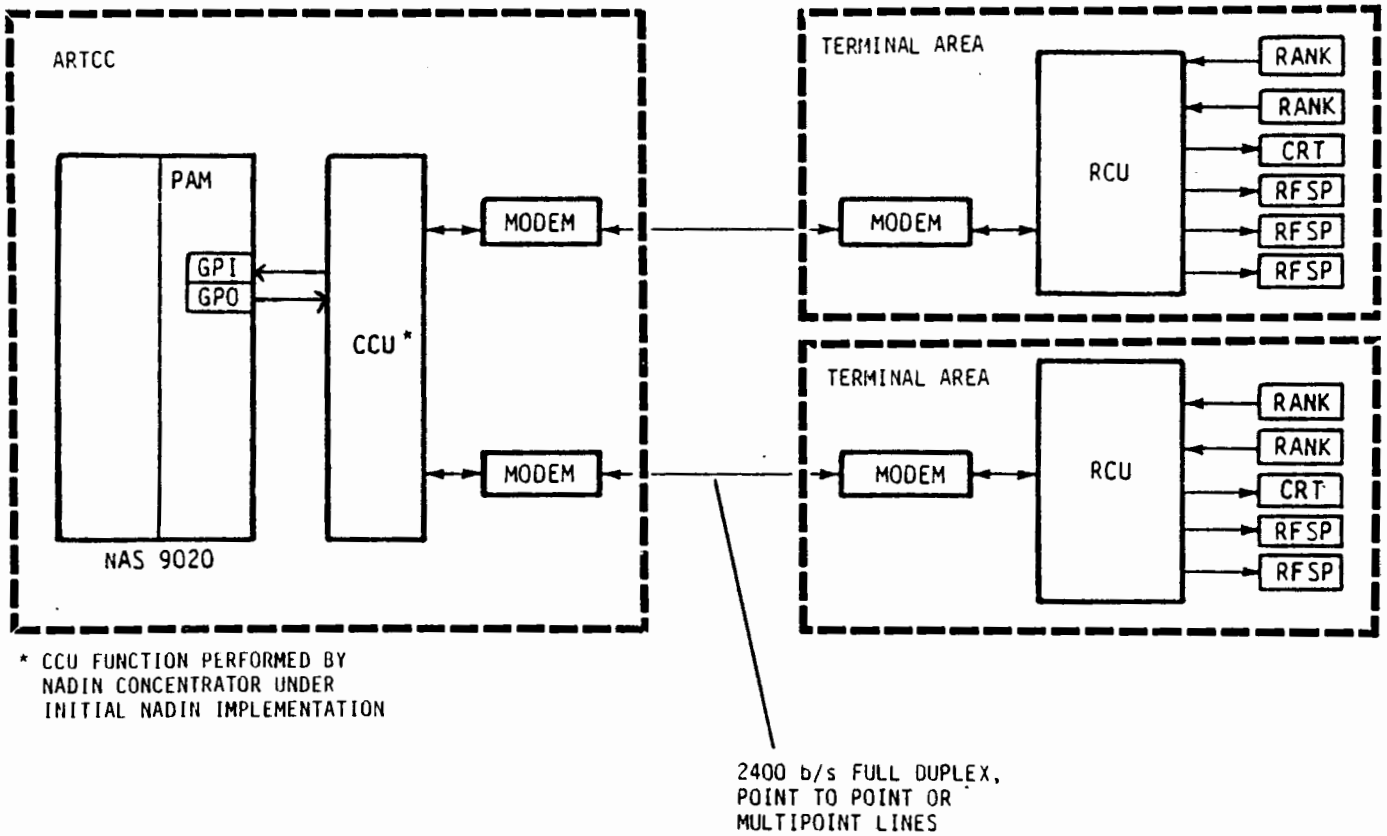

FIGURE 3: FDIO COMMUNICATIONS

- high-speed (2400 b/s) multipoint lines to complement the higher speed data terminals and reduce the number of interfaces required at the ARTCC, and

- a central control unit (CCU) at each ARTCC to assume most of the communications functions now performed by the NAS 9020, and multiplex the channels from the terminal areas onto a single input and a single output link to the NAS 9020 (the CCU functions will be assumed by the NADIN concentrator under the initial implementation of NADIN).

A more complete discussion of both the FDIO and FDEP systems is provided in References 1 and 2.

2.2.2.2 ARTS and the NAS-ARTS Network

The Automated Radar Terminal System (ARTS) has been installed in many terminal areas to provide more comprehensive displays of radar data for controllers. ARTS exists in several variations. The ARTS III and IIIA are the most sophisticated and have been installed at the major airport hubs. ARTS II, a less sophisticated version, has been installed at smaller hubs. FAA plans call for the enhancement of the ARTS IIs to include more of the ARTS III functions (Reference 3). Plans also call for increasing the number of ARTS II sites by enhancing current TPX-42 facilities to essentially provide ARTS II capabilities.

The major common element among the various versions of ARTS is the inclusion of a processor (ARTS computer) to convert radar beacon responses into alphanumeric display data that are superimposed on the primary radar display. The various versions differ with respect to other automated functions provided, e.g., tracking. Originally, only the ARTS III/IIIAs provided for direct communications with the associated NAS 9020s via the NAS-ARTS Network. FAA plans now call for the inclusion of all ARTS IIs in that network (References 4 and 5).

The NAS-ARTS Network is illustrated in Figure 4. Each pertinent ARTS site is connected to the NAS 9020 at the associated ARTCC by a dedicated 2400 b/s full-duplex line. Each line is interfaced with the NAS 9020 through a modem that is directly connected to an Interfacility Input (INTI) and Interfacility Output (INTO) adaptor in the PAM. Although not shown in Figure 4, each modem is connected to two INTI and two

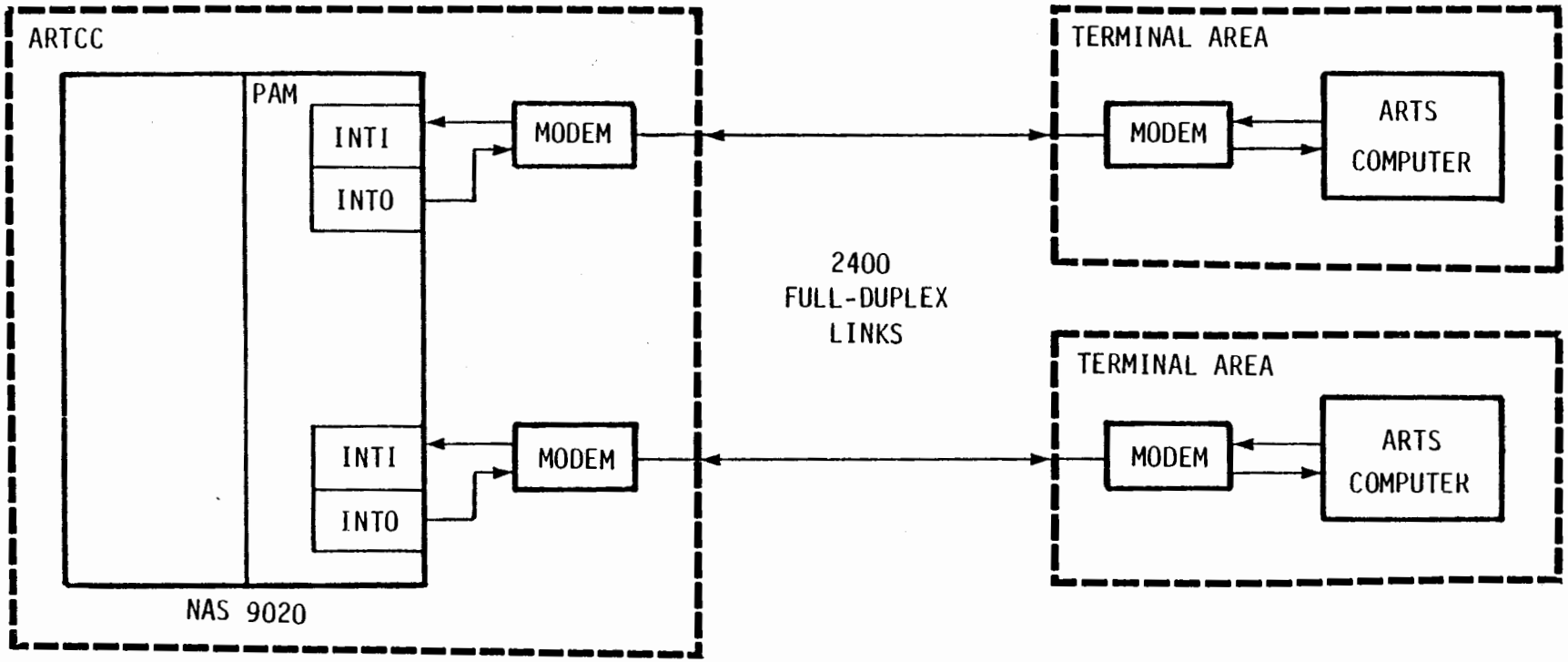

FIGURE 4: NAS-ARTS COMMUNICATIONS

INTO adaptors on separate PAMs in order to insure high reliability. Data is transmitted through these adaptors as 9-bit characters, with the bits transmitted serially. (Detailed discussion of these interfaces is provided in References 6 and 7.)

The NAS-ARTS Network is used primarily to transmit the following types of messages:

- flight plans, amendments, and cancellations from the NAS 9020 to the ARTS computer,
- departure messages and terminate beacon messages from the ARTS computer to the NAS 9020,
- track data transfer messages (track initiate, track update, and track accept) to support the hand-off process in either direction, and
- responses to the above messages (i.e., acceptances, rejections and retransmit requests).

These messages can be generated and transmitted automatically by the pertinent computer or semi-automatically in response to the controller's signals. (Further details on the NAS-ARTS messages are provided in References 8 and 9.)

The existence of a NAS-ARTS link eliminates the need for a departure message to be sent via the FDEP/FDIO link. It does not, however, eliminate the need for FDEP/FDIO transmission of flight plans. Rather it eliminates the need for an approach controller to manually enter the flight plan, received via FDEP/FDIO, into the ARTS computer. Without the NAS-ARTS link, flight hand-off between an ARTCC and an approach control facility is accomplished by voice communications. With the NAS-ARTS link, the two computers can effect the hand-off with the controllers only required to push a few buttons.

2.2.2.3 NADIN

The National Airspace Data Interchange Network (NADIN) is being developed as a common data communications network to integrate many of the currently separate FAA communications networks and to facilitate the addition of new FAA communications services (Reference 10). Figure 5 illustrates the basic elements of the initial NADIN implementation, scheduled to be operational in late 1983.

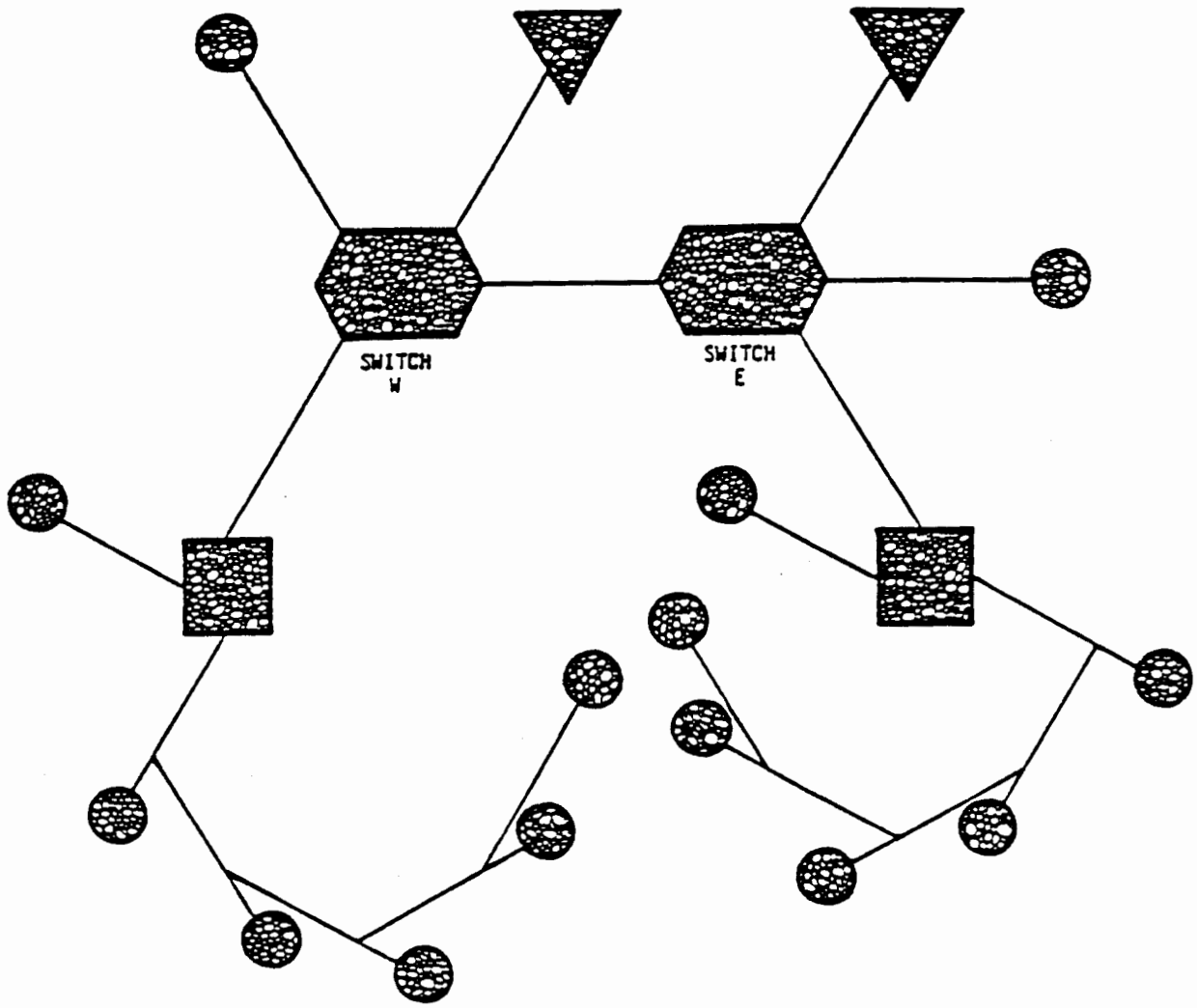

LEGEND:

SWITHES - 2; E-ATLANTA, W-SALT LAKE CITY

CONCENTRATORS - 23; ONE AT EACH ARTCC AND ANCHORAGE, HONOLULU, AND SAN JUAN

TERMINALS - UP TO ABOUT 50 PER CONCENTRATOR THROUGHOUT EACH ARTCC AREA, PLUS SOME AT SWITCHES. SOME ON DEDICATED CIRCUITS, MOST ON MULTIPOINT

EXTERNAL SYSTEMS AND NETWORKS, E.G., INTERNATIONAL AFTN, WMSC

FIGURE 5: NADIN SCHEMATIC

NADIN concentrators will be located at each of the 20 CONUS ARTCCs plus Anchorage, Honolulu and San Juan. Each concentrator will be directly connected to one of two NADIN message switches (backup connection to the second switch will also be provided). The switches and concentrators will be further connected to a variety of computers and data terminals which constitute the origins and destinations of the messages handled. In particular, there will be a direct connection between each NADIN concentrator and the collocated NAS 9020 computer.

The initial NADIN concept called for all messages to be directed from the point of network entry to a message switch. The messages would be processed at the switch and then routed to their intended destinations. NADIN is to be implemented, however, with a number of enhancements to the original concept (Reference 11). These enhancements include the provision of local switching at the concentrators. This feature will allow a concentrator to directly switch FDIO messages between the collocated NAS 9020 computer and the appropriate FDIO remote control units without having the message transmitted to and from the message switch.

The first major enhancement to NADIN, referred to as the Phase 1 Enhancement (NADIN P1), is to be implemented starting about 1985 (Reference 12). That enhancement is projected to be a combined packet switch/message switch network with a packet switch at each CONUS ARTCC and greater connectivity between ARTCCs. One possible configuration for such a network is illustrated in Figure 6. A Phase 2 Enhancement (NADIN P2) has also been projected for implementation about 1988. That enhancement is expected to adopt newer technologies such as satellite transmission, integrated voice/data communications, and local area networks.

2.2.2.4 Mode S Data Link

Before 1988, FAA plans to initiate an air-to-ground data link service for aircraft equipped with Mode S transponders (Reference 12). Although few aircraft are expected to have the required on-board equipment by 1988, and only a limited number of ground facilities (Mode S sensors) will have been installed by that time, the capability to support this service is required in the latter portion of the timeframe of interest in this study.

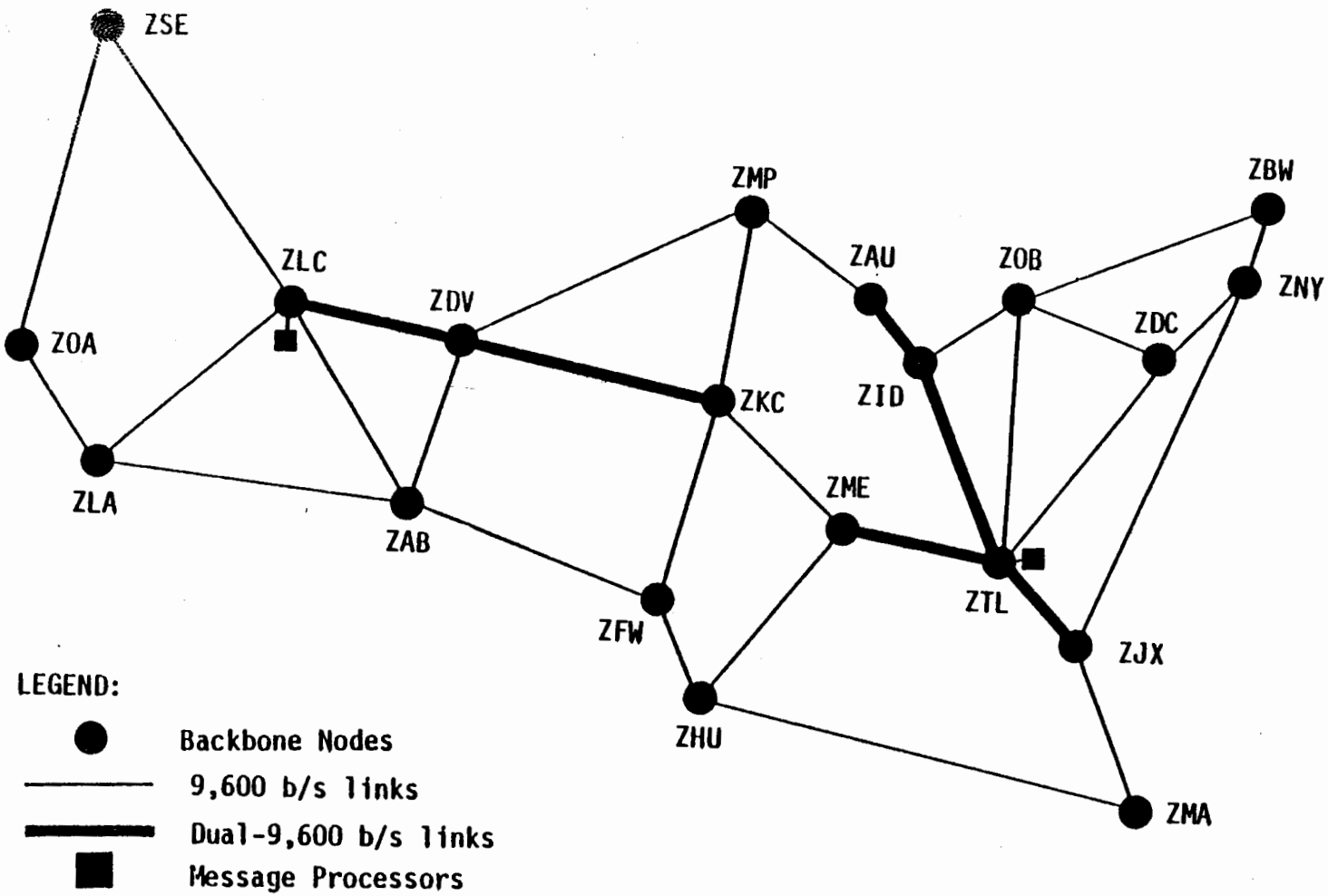

FIGURE 6: POSSIBLE NADIN P1 CONFIGURATION

Mode S sensors will be provided for both terminal area airspace and enroute airspace. Down-link non-ATC messages through the terminal area Mode S sensors will generally require surface links between the sensors and host computers (e.g., CWP or FSDPS) at the associated ARTCCs. The optimal approach to support the surface portion of such data link service will be addressed by a separate study (Task 8 under this contract).

2.2.2.5 Sector Suite

The National Airspace System Plan (Reference 12) calls for the development of new Sector Suites for both the ARTCCs and terminal areas. These will essentially provide the individual sector controllers with a consolidated information processing, display, and communications system, designed for improved controller productivity.

At the terminal areas, Sector Suites will replace ARTS displays, FDIO equipment, and various other current and projected systems. They will eliminate the need for separate NAS-ARTS and FDIO channels to the ARTCC, since the single, consolidated system will perform both FDIO and ARTS functions. Sector Suites are not expected to be operational at terminal areas until after 1990.

2.2.3 Other ATC Facility Changes

The preceding discussion outlined the major projected changes in the ATC system that directly affect NAS-ARTS communications. There are also plans for other changes that will have a less direct, but nevertheless significant, effect on such communications. Specifically:

1. The NAS 9020 computer will be replaced at the ARTCCs starting about 1985. Until sometime after 1988, these new computers (referred to as the NAS 9020R) will essentially emulate the current computers. After 1988, in parallel with the introduction of the new Sector Suites, new software will be implemented to distribute some current functions to the Sector Suites and to add new functions. It is anticipated that the new software will include an X.25 interface for all pertinent communications through NADIN. It is unlikely that software for any existing interfaces would be modified in the interim (1985-1988).

2. By 1985 two, not yet identified, CONUS ARTCCs and one off-shore center will be closed, with their functions absorbed by other centers. After 1987, two additional CONUS centers will be closed.

3. After 1988, in parallel with the deployment of the new Sector Suites, approach control facilities will be consolidated into ARTCCs and a few hub TRACONs. Around 1990 there should be no NAS-ARTS-type communications except within the centers, and between the centers and the 30 hub TRACONs.

2.3 Strategic Requirements

As indicated above, in the discussion of the NAS-ARTS environment, there are three points in time within the near- to mid-range future where major events affecting NAS-ARTS communications are to occur. These are:

- 1983, when NADIN is to be implemented,
- 1985, when NADIN P1 is to be implemented and the NAS 9020 is to be replaced, and
- 1988, when NADIN P2 is to be implemented, new Sector Suites are to be operational, and new 9020R software is to be implemented.

Since the current NAS-ARTS Network is highly effective, it is unlikely that there would be any desire to enhance NADIN so as to support NAS-ARTS communications prior to the Phase 1 Enhancement. Further, in light of the relatively drastic changes to occur after 1988 and the limited detail yet developed pertinent to those changes, there would be little value in addressing NAS-ARTS-type communications beyond 1988 at this time. As a result, this study has been restricted to considering communications utilities for supporting NAS-ARTS communications in the 1985-1988 timeframe. Such a utility must meet the strategic requirements described below.

2.3.1 Objectives

A utility to support NAS-ARTS communications must:

1. satisfactorily perform the current functions of the NAS-ARTS Network for message traffic levels expected at least through 1988,

2. facilitate the conversion to a NAS-Terminal Area Sector Suite service,

3. require no modifications to the NAS 9020(R) and ARTS computer software, and

4. be completely transparent to controllers at the ARTCCs and approach control facilities.

2.3.2 Policy

The utility must be consistent with FAA Order 1830.2 (Reference 13). That order identifies sets of standards related to communications codes, signaling rates, transmission modes, bit sequencing, character structure, link control procedures, message transfer, and electrical and physical interfaces to be implemented as part of new or upgraded FAA data communications systems.

In order to be consistent with FAA's minimal risk requirements, the utility must incorporate only proven technology.

2.3.3 Cost Considerations

The utility must cost no more than the current NAS-ARTS Network and its extension to other ARTS sites. For purposes of comparing costs, life cycle costs must be used, reflecting both one-time and recurring costs. Costs for items already procured or to be procured regardless of the NAS-ARTS utility selected must not be considered a cost component for any potential NAS-ARTS utility (or must be considered a cost component for all). Similarly, no credit for salvage value can be given in cases where already procured items are not required for a specific alternative.

2.4 Tactical Requirements

A communications utility must meet the tactical requirements described below in order to be considered an acceptable alternative for handling the NAS-ARTS traffic.

2.4.1 System Configuration

The nodes of the NAS-ARTS communications utility must include the CONUS ARTCCs and the various CONUS ARTS sites whose computers are to be provided intercommunications with the NAS 9020R computers. The number of such ARTS sites will change as FAA enhances its ATC automation system. For purposes of this study, 171 pertinent ARTS sites have been identified for the 1983-1988 timeframe. These are listed in the tables of Appendix A. They include:

- the New York Common IFR Room (NY CIFRR),
- 60 current ARTS III/IIIA sites, listed in the ATS Fact Book (Reference 14),
- 62 current ARTS II sites, listed in the ATS Fact Book,
- 13 other ARTS II sites, identified for the ARTS II Enhancement Program (Reference 3),
- 1 additional ARTS II site (White Plains, N.Y.), included in AAT's listing for proposed NAS-ARTS service (Reference 4), and
- 34 TPX-42 sites, identified for NAS-ARTS service (Reference 5).

Table 1 shows the distribution of these sites with respect to the 20 ARTCCs.

The basic requirement for the NAS-ARTS utility is to provide effective computer-to-computer communications between an ARTCC and each associated terminal area with an ARTS facility. The utility used to service the NAS-ARTS requirements might, however, be designed to service other related requirements, for example:

CENTER	NUMBER OF ASSOCIATED SITES		
	ARTS III/IIIA	ARTS II/TPX-42	TOTAL
Albuquerque	4	1	5
Atlanta	3	9	12
Boston	5	6	11
Chicago	2	13	15
Cleveland	5	9	14
Denver	1	3	4
Fort Worth	4	6	10
Houston	3	8	11
Indianapolis	5	5	10
Jacksonville	1	8	9
Kansas City	2	3	5
Los Angeles	6	4	10
Memphis	2	5	7
Miami	3	2	5
Minneapolis	3	7	10
New York	2	8	10
Oakland	2	4	6
Salt Lake City	1	3	4
Seattle	2	2	4
Washington	5	4	9
TOTAL	61	110	171

TABLE 1: DISTRIBUTION OF ARTS SITES

- FDIO communications to sites with or without ARTS,

- data communications between ARTCCs and other facilities in the vicinity of ARTS sites, and

- direct communications between adjacent ARTS sites that share a common boundary.

Communications of the general type discussed above are also required between each ARTCC and some terminal area facilities operated by military personnel. Such facilities are not currently included in the NAS-ARTS Network nor were they considered as part of the FDIO program. Although it might be desirable to include service to such sites in any new NAS-ARTS-type communications utility, it has not been practical to consider them directly in this study. Rather, the communications utility must be sufficiently robust so as to accommodate additional terminal areas without significant degradation to the service.

2.4.2 Message Traffic

The NAS-ARTS traffic primarily includes flight plan and track data messages exchanged as part of the control transfer process. The volume of this traffic is essentially proportional to the number of instrument operations at the ARTS site. A model of this relationship has been developed for use in estimating the expected NAS-ARTS message traffic for the period of interest in this study. This model and its application are detailed in Appendix A. Table 2 summarizes those results in terms of the projected busy-hour NAS-ARTS message volumes at each ARTCC in 1983 and 1987. The numbers shown reflect one-way traffic either to or from the ARTCC. Thus, for example, it is estimated that in 1983 the NAS 9020 computer at the Albuquerque Center will receive 2,599 messages from associated ARTS computers and will send 2,599 messages to those computers during a busy hour.

The average length of a message has been determined to be:

- 39.9 characters for ARTCC to ARTS messages, and
- 32.2 characters for ARTS to ARTCC messages.

CENTER	SITES	BUSY-HOUR MSGS 1983	BUSY-HOUR MSGS 1987
ALBUQUERQUE	5	2599	2985
ATLANTA	12	7563	8700
BOSTON	11	4921	5744
CHICAGO	15	8199	9381
CLEVELAND	14	8747	10177
DENVER	4	2170	2535
FORT WORTH	10	6149	7074
HOUSTON	11	6948	8073
INDIANAPOLIS	10	5392	6394
JACKSONVILLE	9	3427	3914
KANSAS CITY	5	3401	3974
LOS ANGELES	10	7644	8795
MEMPHIS	7	3483	4052
MIAMI	5	4491	5243
MINNEAPOLIS	10	3491	3995
NEW YORK	10	7595	8833
OAKLAND	6	4648	5269
SALT LAKE CITY	4	1742	1955
SEATTLE	4	2403	2807
WASHINGTON	9	5951	6953
TOTALS : 20 CENTERS	171	100964	116853

TABLE 2: NAS-ARTS MESSAGE TRAFFIC AT CENTERS

The determination of these averages is also detailed in Appendix A.

2.4.3 Transmission Delays

Since the NAS-ARTS traffic includes track data messages used in flight hand-offs, data exchange must be provided on a near real-time basis. This is interpreted to mean that network delays (transmission, network processing, and queuing delays) must average no more than 1 second.

2.4.4 Availability/Reliability

NAS/ARTS service is required 7 days a week and, at most locations, 24 hours a day. Utility outages cannot be completely avoided, thus some type of back-up service is required. Currently, back-up service is provided by voice communications. This type of operation cannot be tolerated too frequently or for too long a period.

SECTION 3

IDENTIFICATION OF ALTERNATIVES

3.1 Introduction

Four alternative NAS-ARTS communications utilities have been identified for detailed analysis and comparison. These include the current network, the addition of multiplexing to the current network, and two alternatives incorporating multiplexing and local switching at the NADIN nodes.

3.2 Discussion

The current NAS-ARTS Network provides highly effective service. The projection of this network to the 1985-1988 timeframe must, therefore, be considered as an acceptable alternative. However, this approach has two major limitations:

- It involves relatively inefficient use of transmission facilities.
- It places a relatively heavy communications burden on the center computer (NAS 9020/9020R).

These limitations are currently of a minor nature, since there are only about 60 NAS-ARTS links, with an average of about 3 per ARTCC. By 1985, however, it is projected that there will be over 170 such links (to only 18 ARTCCs), for an average of over 9 per ARTCC. The other alternatives considered for NAS-ARTS communications support in the 1985-1988 timeframe have been specifically selected to overcome one or both of these limitations.

3.2.1 Transmission Facility Utilization

The current NAS-ARTS Network includes a separate, dedicated, point-to-point, leased voice grade line, operating at 2400 b/s, from each pertinent ARTS site to the

associated center. The capacity of these lines is generally underutilized by NAS-ARTS traffic. Further, the capacity of voice grade lines can be increased up to 9600 b/s through the use of higher speed modems and, if needed, line conditioning. Projection of NAS-ARTS traffic growth through 1990 suggests, however, that only about five of the ARTS sites would require a line capacity in excess of 2400 b/s.

The inefficient use of the line capacities, as outlined above, suggests two approaches for improvement:

- use of a less expensive transmission facility, possibly with less capacity (e.g., switched circuits), and

- sharing the transmission facilities.

The former approach must be ruled out because of the continuous interconnection requirement and the fact that some NAS-ARTS links will, in the future, require more than 2400 b/s capacity. Other transmission facilities could be considered in the future, particularly in conjunction with the second approach, link sharing. Thus, for example, microwave or satellite links might be considered when FAA expands its coverage with such systems.

The sharing of NAS-ARTS transmission facilities can take a number of forms. These include:

- use of multipoint connections,

- use of multiplexors or concentrators to combine lines from several ARTS sites onto a single trunk to the center, and

- use of multiplexors or concentrators to combine traffic from one ARTS facility and other collocated facilities onto a single trunk to the center.

Use of multipoint connections for NAS-ARTS traffic is not desirable due to the inherent queuing delays (while sites are awaiting polls) and the possibility of losing several NAS-ARTS circuits when one link goes down. Multiplexing several NAS-ARTS

lines onto a single trunk, while preserving the point-to-point nature of the channels, also risks the possibility of losing several NAS-ARTS circuits when one trunk goes down. This approach was, nevertheless, investigated (see Appendix B). It was rejected, however, because of the combination of cost and availability considerations.

The third possible approach to line sharing, multiplexing one NAS-ARTS line with lines to the center from other facilities collocated with the ARTS, is particularly pertinent. Every ARTS site will include FDIO equipment, which must also communicate with the center computer. Multiplexing FDIO and NAS-ARTS lines from each ARTS site would significantly reduce the combined transmission costs with minimal impact on NAS-ARTS channel availability. If there are other nearby facilities, e.g., Mode S, that communicate with the center (or the NADIN node at the center), further savings would be possible. This approach to line sharing has been used as the basis for the second alternative considered.

3.2.2 Multiplexing/Concentration

Before considering approaches for overcoming the second limitation of the current NAS-ARTS Network, it will be useful to review the various approaches to multiplexing (including concentration). Three types of multiplexing equipment would be pertinent for NAS-ARTS applications:

- time division multiplexors (TDMs),
- statistical time division multiplexors (STATMUXs), and
- concentrators (CONCs).

Each of these types of equipment can be used to allow a number of relatively low-speed channels to share higher speed trunks. When used in pairs, the multiplexing/concentration process can be made transparent to the end users. Each of the three types has special advantages and disadvantages. The basic differences are illustrated in Figure 7, which shows possible applications of the three.

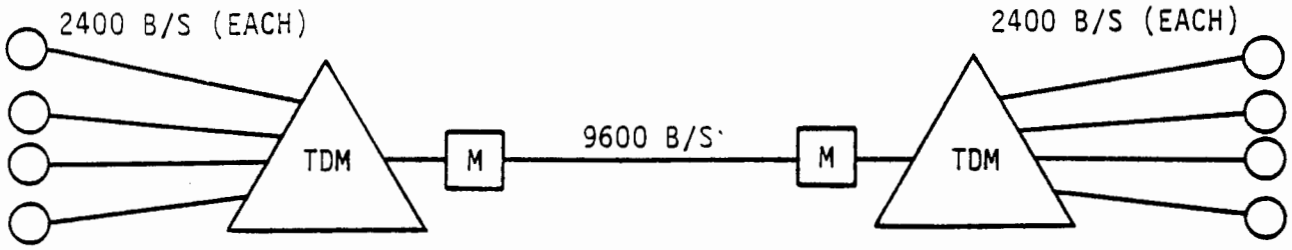

a. EXAMPLE APPLICATION OF TDMs

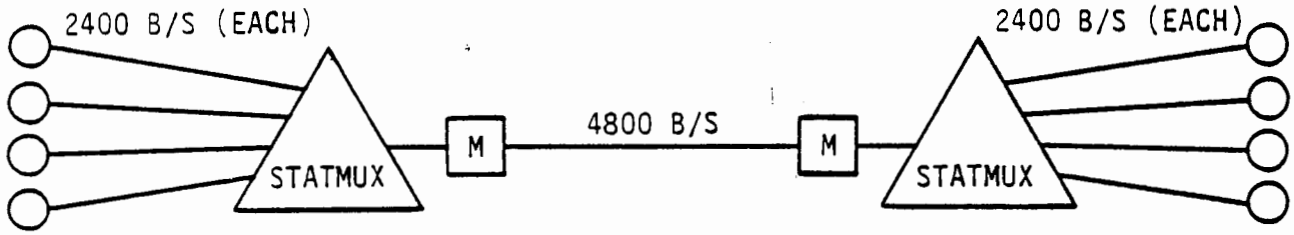

b. EXAMPLE APPLICATION OF STATMUXs

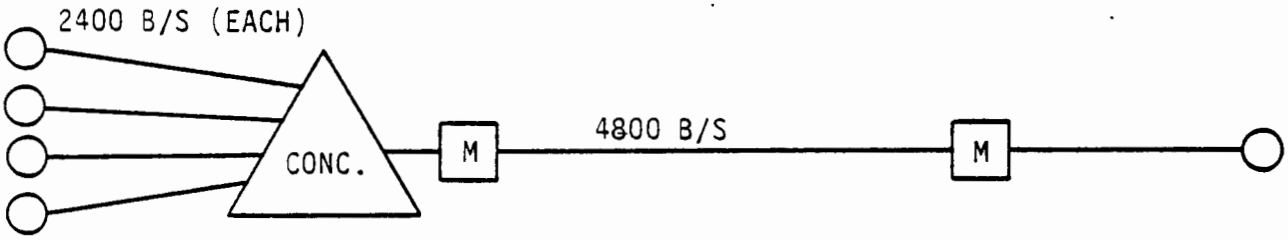

c. EXAMPLE APPLICATION OF CONCENTRATORS

FIGURE 7: EXAMPLE APPLICATIONS OF MULTIPLEXORS/CONCENTRATORS

With TDMs the full capacity of a trunk is divided into time slots. Specific slots are reserved for each of the input channels. The speed of the trunk must be equal to or greater than the combined speeds of the input lines. Thus, for example, TDMs could be used to allow four 2400 b/s lines to share one 9600 b/s trunk. TDMs are generally the simplest and least expensive multiplexors and they involve negligible buffering and queuing. They also provide transparency for both synchronous and asynchronous traffic. On the other hand they are generally the least efficient (of the three types considered) in terms of line utilization, since time slots are reserved even if a channel is not in use. TDMs combined with modems are readily available and are called multiplexing modems.

STATMUXs take advantage of the fact that traffic on the input channels may be bursty. They service the incoming traffic essentially on a demand basis. Since no capacity is reserved, it is generally possible to use a lower speed trunk or to multiplex more input channels onto a given trunk. The major advantage of STATMUXs over TDMs is thus the lower cost associated with use of lower speed modems or fewer trunks. Their disadvantages include the higher cost of STATMUXs compared to TDMs and the need for more buffering and queuing. STATMUXs are also not completely transparent to all types of synchronous traffic.

Concentrators are essentially computers that have been programmed to function like STATMUXs. Because they are programmable, they can also be used to perform other traffic processing functions. As a result they can be used to prepare the multiplexed traffic for direct input to a single end user and conversely to break out the traffic from a single source to multiple end users. Concentrators have the same advantages and disadvantages as STATMUXs and they are more flexible, but they are significantly more expensive. Further, for most applications, they can be used singly rather than in pairs (if the host can do the software demultiplexing).

In considering the use of multiplexors/concentrators to allow the sharing of trunks by NAS-ARTS and FDIO traffic, either TDMs or STATMUXs would appear appropriate. If NAS-ARTS traffic is to continue to go directly to the center computer and FDIO traffic is to go to the NADIN concentrator, there would appear to be little benefit from the use of concentrators. If, however, NAS-ARTS traffic were also to be switched by NADIN, concentrators could offer some benefits.

3.2.3 Communications Control

In the current NAS-ARTS Network all communications control is performed by the NAS 9020 (and ARTS) computers. As a result, separate input/output adaptors in the NAS 9020 PAMs are required for each pertinent ARTS site. A similar situation exists relative

to other communications links to the NAS 9020 (e.g., FDEP and NAS-NAS links). As a result much of the NAS 9020 processing capacity is inefficiently devoted to communications control, and the PAMs have become saturated. This has limited the number of new communications links, and in particular NAS-ARTS links, that can be implemented.

Two development programs now underway will relieve these problems to some extent. These are the NAS 9020 Computer Replacement Program and NADIN. The former will, among other improvements, increase the general capacity of the computer system. Initially, however, the current PAMs will be retained. NADIN will relieve the central computer of communications control functions relative to those services supported by NADIN.* Further, channels directed through NADIN will share PAM adaptors, rather than requiring individual adaptors.

These two programs will ensure that the central computer capacity will be adequate for the 1985-1988 period (and beyond). The general goals of separating the communications control functions from the central computer and of limiting direct interfaces to the central computer should, nevertheless, be pursued in order to ensure continued efficiency in the use of central computer resources. Directing NAS-ARTS channels through the NADIN packet switches at the centers would further those goals.

Three approaches for using NADIN switching to support NAS-ARTS communications have been considered. Each of the three requires the NAS 9020R to accept and transmit NAS-ARTS traffic by way of a link to the collocated NADIN node. The three differ with respect to the NADIN node-to-ARTS link. Specifically:

- The first approach uses a dedicated point-to-point link, similar to that used for the current NAS-ARTS Network.

- The second approach uses TDMs/STATMUXs as in the non-switching variation discussed above; however, both NAS-ARTS and FDIO traffic will be routed through and locally switched at the NADIN node.

---

* Although NADIN will perform the actual link control functions, it is not yet clear whether NAS 9020 software will be sufficiently modified to derive the full benefits of this function transfer.

- The third approach uses a concentrator at each ARTS site to multiplex NAS-ARTS and FDIO traffic; the trunk will be connected to the NADIN node through a single port.

The first of these approaches does remove the communications control burden for NAS-ARTS traffic from the NAS 9020R. However, it sustains the inefficient use of the communications facilities. Further, since new NADIN ports and software would be required, this approach would be more expensive then the current network. This approach was thus excluded from more detailed analysis.

Both of the other two approaches were included in the more detailed analysis. Both ease the NAS 9020R communications control burden and make more efficient use of the transmission facilities.

3.2.4 The NADIN Nodes

Specifications for the NADIN P1 backbone nodes are being developed as part of a separate study (Task 13 under this contract). The physical nature of those nodes (i.e., the number and type of hardware units at each node) should be left to the implementing contractor. It is possible, however, to project a functional description of the nodes. This functional concept is important in the analysis of the alternatives defined above.

The typical NADIN node under the NADIN P1 concept will include three broad functional units:

- the NADIN concentrator function,
- a packet switch function, and
- a new network access function.

The NADIN concentrator function refers to the collection of all functions performed by the NADIN concentrators under the initial implementation concept. These include network access, some message processing, and limited switching.

The packet switch function refers to the movement of packetized data on virtual circuits over the packet switched backbone subnetwork to be implemented as part of NADIN P1. That subnetwork will include direct connectivity between selected neighboring nodes and as a result, alternate routing capability. Subscribers that can implement the X.25 packet level protocol and do not require NADIN concentrator functions will be able to directly access the packet switch function.

The new network access function will provide a bridge between the NADIN concentrator function (or the front-end processors for the NADIN message switches) and the packet switch function. It will implement the X.25 packet level protocol for access to the packet subnetwork, establishing virtual calls or identifying permanent virtual circuits to be used. This function will also provide the network access point for subscribers that cannot implement the X.25 packet level protocol but require no NADIN concentrator functions.

An important facet of this concept is the manner in which the NAS 9020R computers will interface the NADIN P1 nodes. It is expected that, ultimately, an X.25 interface will be implemented between each NAS 9020R and the collocated NADIN packet switch function. All NADIN traffic directed to or from the NAS 9020R would use that interface, including traffic requiring NADIN concentrator functions. This implies significant software modifications for the NAS 9020R; thus the capability is not expected to exist prior to 1988. It is expected that, at the time the new NAS 9020R hardware is introduced (1985), all existing interface software will be frozen. Traffic using the PAM-to-NADIN concentrator interface (e.g., FDIO) would continue to do so. This does not imply, however, that NAS-ARTS traffic could not be supported by the packet switch function. Rather, if such support were desired, each of the NAS-ARTS links from the NAS 9020R would be directed separately to the new network access function. The links from the ARTS sites would then be directed to either the new access function or the packet switch function, as appropriate. This is illustrated in Figure 8.

In particular, the alternative using multiplexors and local switching would direct NAS-ARTS traffic from the ARTS site to the new access function and FDIO traffic to the NADIN concentrator function. The alternative using remote concentrators and local switching would, on the other hand, direct both NAS-ARTS and FDIO traffic to the packet switch function. Subsequently, these would be separated by the new access function, with the NAS-ARTS traffic passed directly to the NAS 9020R, while FDIO traffic would first be passed to the NADIN concentrator function.

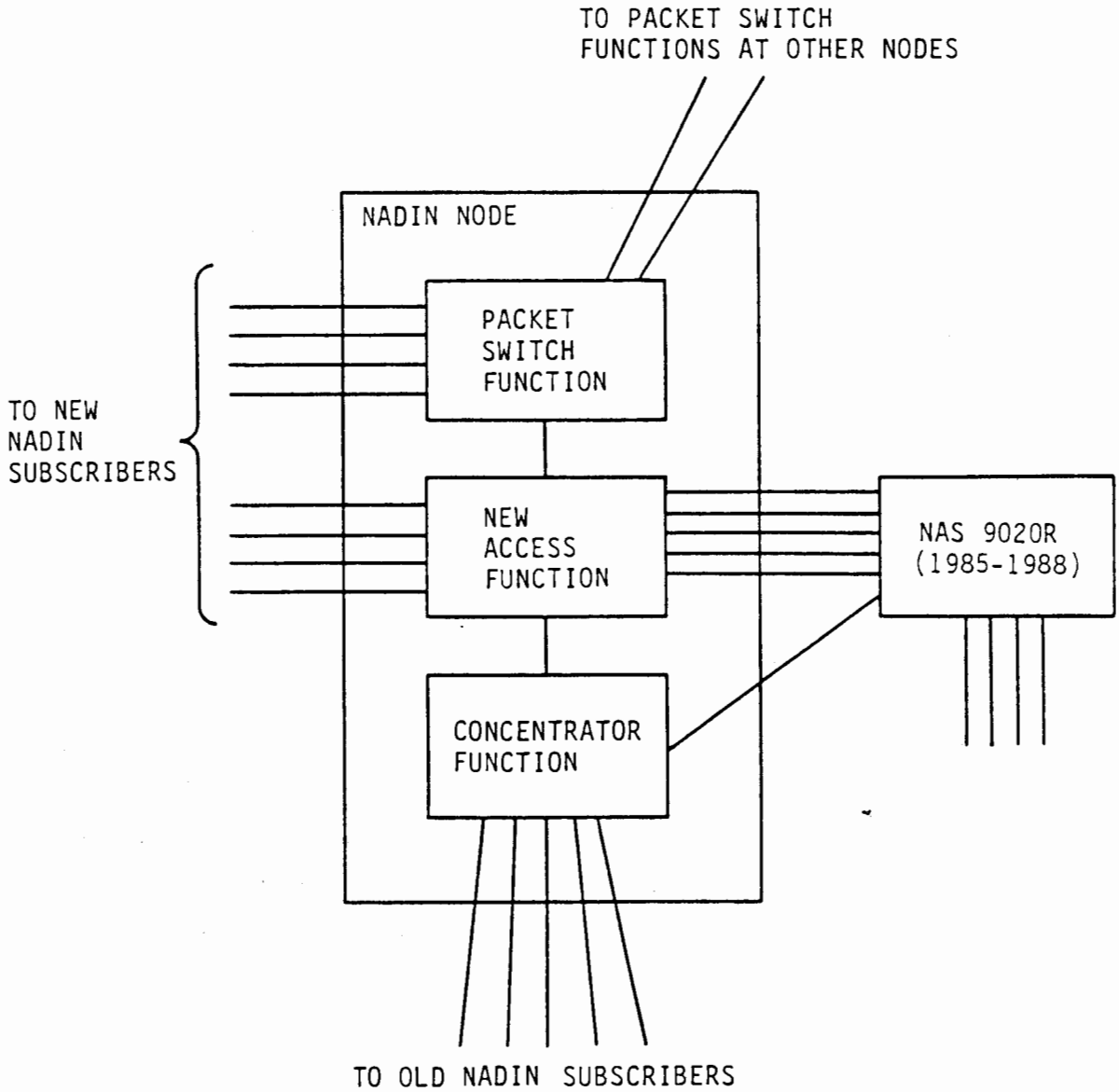

FIGURE 8: NADIN NODE FUNCTIONAL CONCEPT

3.3 Description of Alternatives

As indicated above, four alternatives for supporting NAS-ARTS communications were selected for detailed analysis. These are referred to as:

- Alternative 1, The Current Approach,
- Alternative 2, The Current Approach with TDMs/STATMUXs,
- Alternative 3, The Local Switching Approach with TDMs/STATMUXs, and
- Alternative 4, The Local Switching Approach with Concentrators.

The possible implementation of each of these alternatives is outlined below.

3.3.1 Alternative 1, The Current Approach

The first alternative considers the projection of the current NAS-ARTS Network into the 1985-1988 timeframe. This approach involves the use of dedicated, full-duplex, point-to-point, voice grade lines, operating at 2400 b/s between each ARTS facility and the NAS 9020R computer at the associated ARTCC. Since the 9020 peripheral adaptor modules (PAMs) will be retained for use with the 9020R, there would be no change in the basic communications facilities or interfaces. The only change from the current network would be the increase from approximately 60 CONUS ARTS sites in the network to approximately 170 and a decrease from 20 CONUS ARTCCs to 18.

Complementing the NAS-ARTS Network would be the FDIO circuits. Each ARTS site will also contain an FDIO facility. In addition, there will be approximately 110 smaller CONUS terminal areas with FDIO facilities only. The FDIO facilities will generally be interconnected with the NADIN concentrator over full-duplex, multipoint, voice grade lines, operating at 2400 b/s. A NADIN-to-9020R link will complete the connection. For efficiency, some FDIO sites will be linked to the NADIN node by dedicated, point-to-point lines.

Figure 9 illustrates this alternative. The figure shows an ARTCC with four associated ARTS sites and three FDIO-only sites. There is a dedicated, point-to-point line

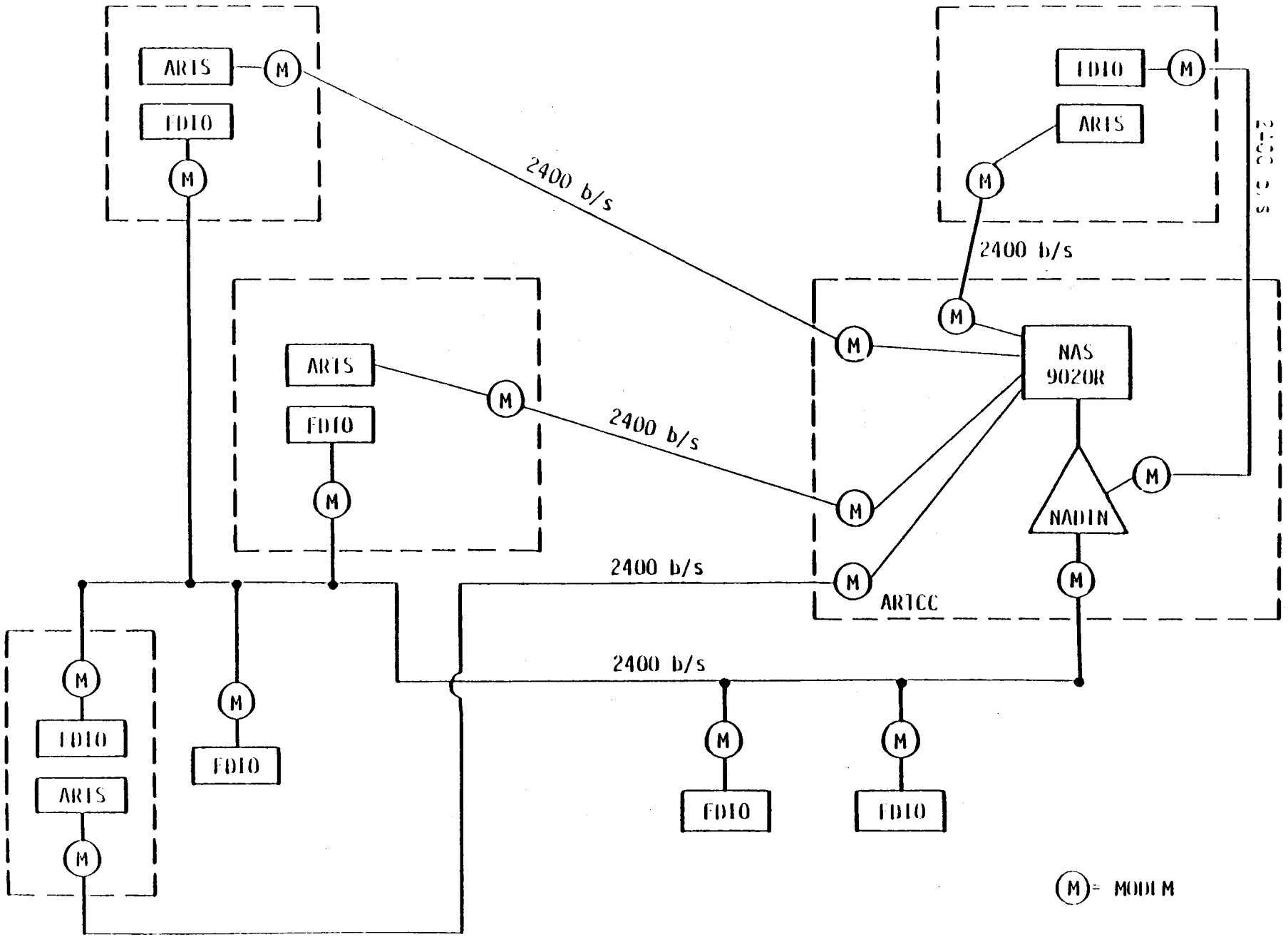

FIGURE 9: ALTERNATIVE 1, THE CURRENT APPROACH

from the ARTCC to each ARTS facility, a multipoint line connecting most of the FDIO facilities to the NADIN node at the ARTCC, and one point-to-point FDIO link.

The following features of this approach are pertinent to the subsequent comparisons:

1. The full 2400 b/s capacity of each NAS-ARTS line is available for NAS-ARTS traffic and only for NAS-ARTS traffic. Thus, there will be no contention for line use, but there will generally be excess capacity.

2. All communications control functions for the NAS-ARTS links must be provided by the NAS 9020R and ARTS computers. These functions include transmission error detection, retransmission, data flow control, and line status checking.

3. Should a NAS-ARTS link go down, only a single ARTS site would be affected.

4. All NAS-ARTS links essentially parallel FDIO links.

5. This approach results in essentially no network delays resulting from NAS-ARTS traffic queuing or processing.

3.3.2 Alternative 2, The Current Approach with TDMs/STATMUXs

Alternative 2 attempts to make more efficient use of NAS-ARTS link capabilities by multiplexing NAS-ARTS and FDIO traffic onto a single trunk. This approach is generally feasible since voice grade lines can be operated at line speeds ranging from 2400 to 9600 b/s with no difference in line cost. When properly designed, such a system can sufficiently reduce line and drop costs so as to more than offset the added costs for multiplexors, higher speed modems, and if needed, line conditioning. This approach is illustrated in Figure 10. Figure 10 uses the same site layout that was used to illustrate Alternative 1 in Figure 9.

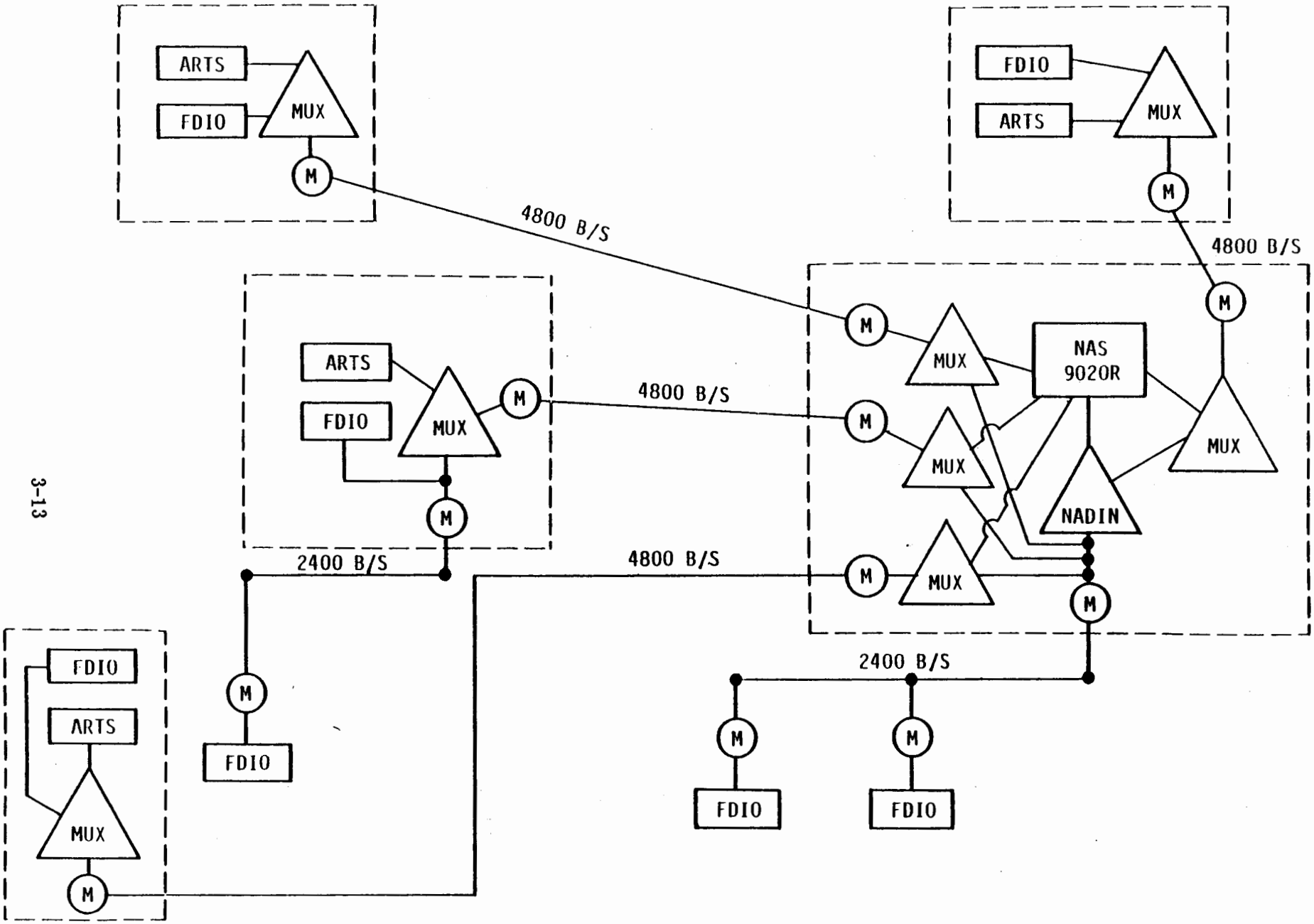

FIGURE 10: ALTERNATIVE 2, THE CURRENT APPROACH WITH TDMs/STATMUXs

The illustration shows four pairs of multiplexors (MUXs) used to permit the traffic for collocated ARTS and FDIO facilities to share trunks. In one instance, the FDIO traffic is associated with a multipoint line to an FDIO-only site. The reduction in leased lines, in comparison with Figure 9, should be obvious. A less obvious difference in this example, is the need for four fewer modems (and the associated telephone company drops). This results from the fact that FDIO facilities collocated with the multiplexors do not require separate modems or drops. The multiplexed trunks are shown to have 4800 b/s capacities. This would be required if TDMs were used. If STATMUXs were used, some trunks could operate at 2400 b/s. Generally, the lower line speeds would require less expensive modems but could result in reduced performance. The optimal line speeds with STATMUXs will depend on the throughput requirements.

Alternative 2 would thus incorporate pairs of either TDMs or STATMUXs to ensure more efficient use of leased lines. The following additional features of this approach are pertinent to subsequent comparisons:

1. Some of the communications control functions can be transferred to the multiplexors.

2. Should a trunk go down, one ARTS and one or more FDIO facilities could be affected.

3. With STATMUXs there will be contention for trunk usage.

3.3.3 Alternative 3, The Local Switching Approach with TDMs/STATMUXs

Alternative 3 is directed toward overcoming the two major shortcomings of the current NAS-ARTS Network. Specifically:

- It would remove the need to have the NAS 9020R perform NAS-ARTS communications control functions.

- It would make more efficient use of leased line capacity.

The latter would be accomplished through multiplexing, just as under Alternative 2. The former would result from using the NADIN node much like a front-end processor for the NAS 9020R. All NAS-ARTS lines, under this approach, would be directed through the packet switch function at the ARTCC. A NAS 9020R-to-NADIN link (possibly one used for other services) would complete the connection.

Figure 11 illustrates this alternative. The only difference between this representation and that for Alternative 2 in Figure 10 are the intrafacility links at the ARTCC; they all terminate at the NADIN node for Alternative 3. This implies the need for additional NADIN ports and the associated software.

The following features of this alternative are pertinent to subsequent comparisons:

1. As with Alternative 2, the same traffic as handled by Alternative 1 can be accommodated with fewer miles of leased lines.

2. If STATMUXs are used, there will be contention for trunk usage.

3. NAS-ARTS communications control functions would be performed by NADIN. Some of those functions otherwise performed by the ARTS computers could be performed by the multiplexors.

4. Should a trunk do down, one ARTS and one or more FDIO facilities would be affected.

3.3.4 Alternative 4, The Local Switching Approach with Concentrators

As suggested earlier, concentrators could be used instead of TDMs or STATMUXs. Their advantage, relative to Alternative 3, is that they can be programmed to process the traffic in a way that would require interfacing with only a single NADIN port. The NADIN node thus absorbs the functions of the multiplexors that would otherwise be located at the ARTCC.

This approach is illustrated in Figure 12. In comparison with the TDM/STATMUX approach (Figure 11), this variation would replace two multiplexors with one (remote)

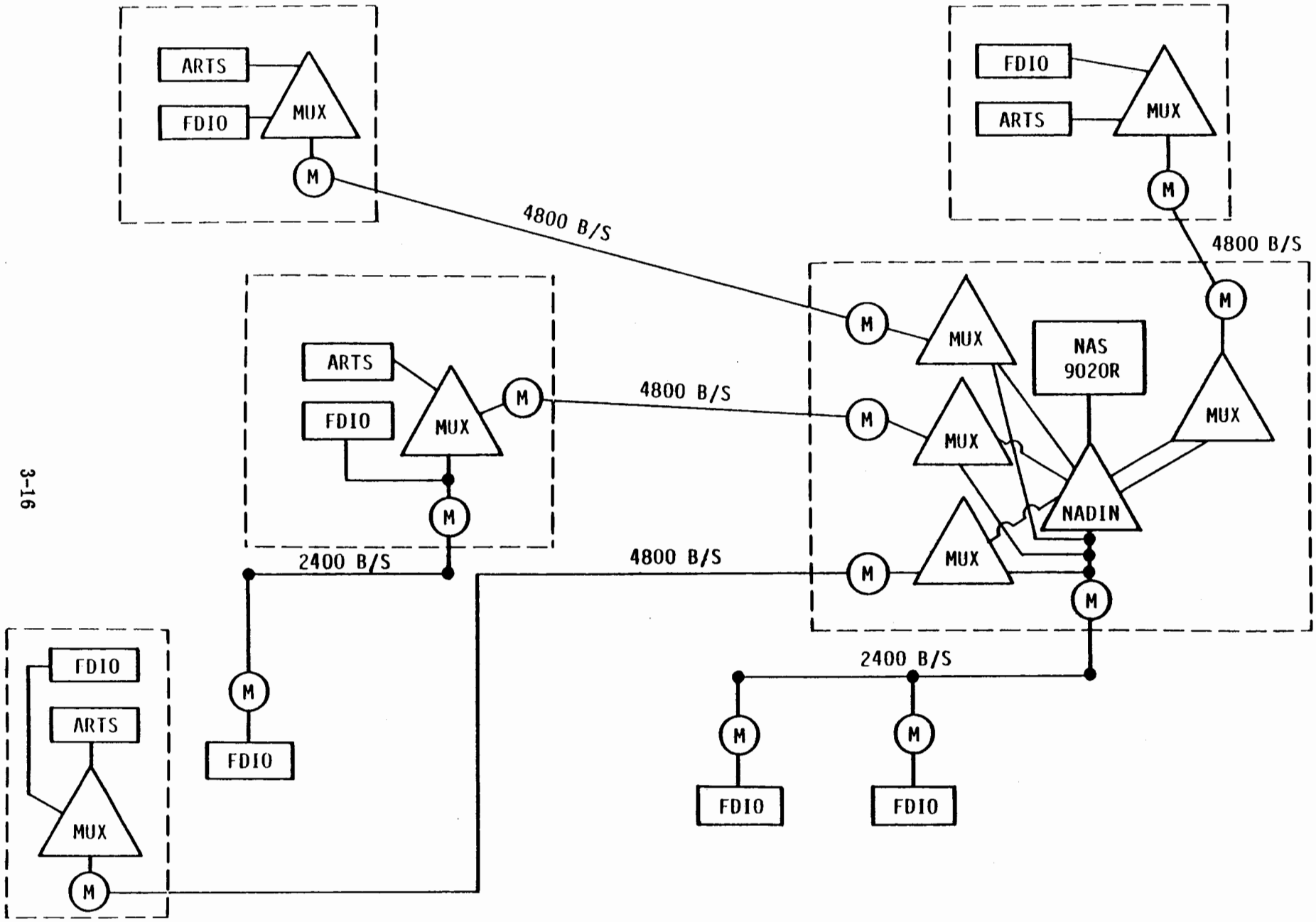

FIGURE 11: ALTERNATIVE 3, THE NADIN APPROACH WITH TDMs/STATMUXs

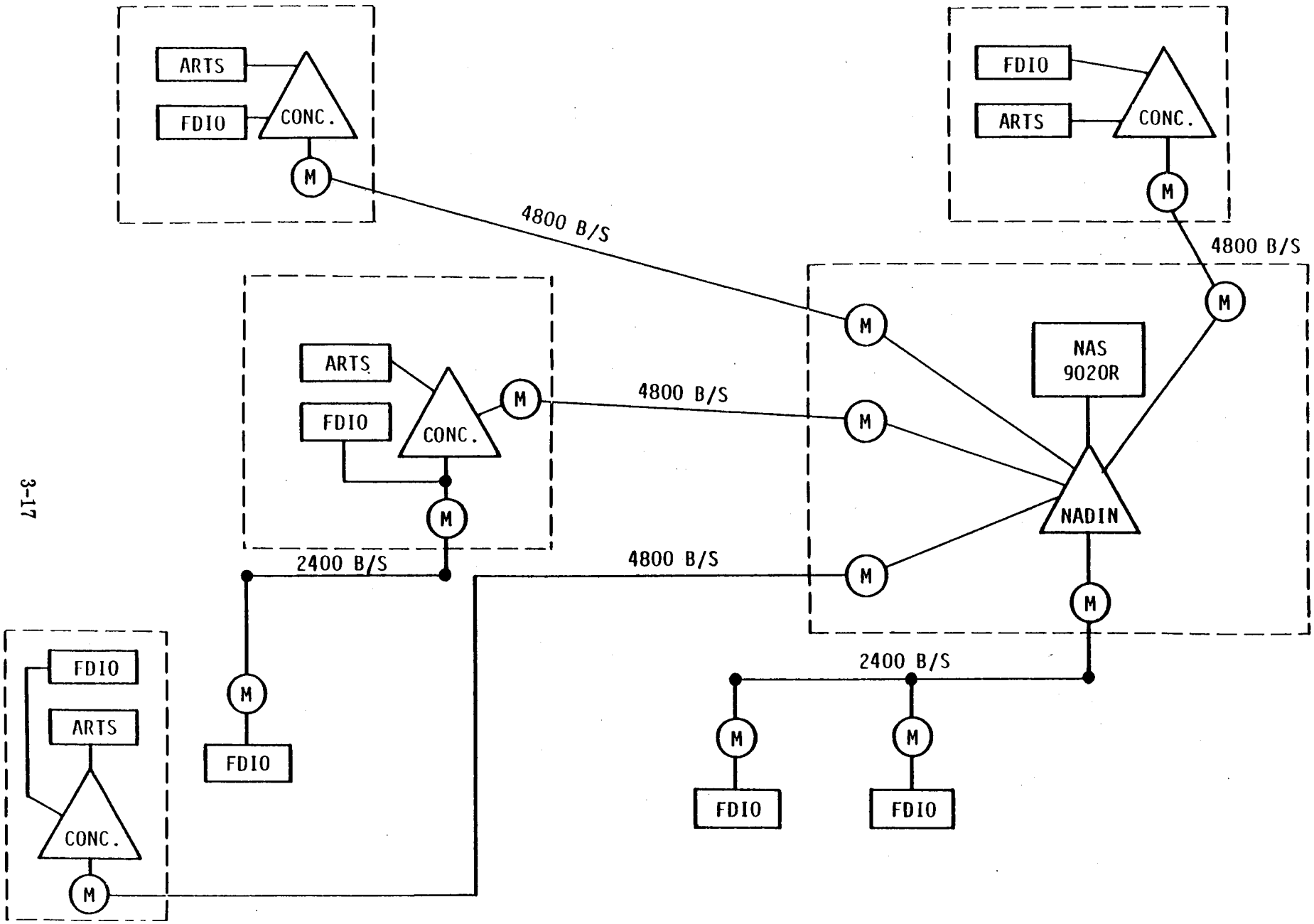

FIGURE 12: ALTERNATIVE 4, THE NADIN APPROACH WITH CONCENTRATORS

concentrator. On the other hand, it would require more complex software for the NADIN ports as well as software for the remote concentrators. The remote concentrators considered under Alternative 4 are not "NADIN Concentrators" specified for initial NADIN implementation. Rather they can be any communications concentrators capable of performing the multiplexing and processing functions required.

One special capability afforded by the use of concentrators relates to the projected concept for the NADIN node. The NADIN node as considered here has several functions, including facilitating network access for heterogeneous users and packet switching. These functions may be implemented in separate hardware or a single hardware unit. It is conceived, however, that traffic formatted so as to require no NADIN concentrator functions could be directed to the packet switch with minimal NADIN processing. The remote concentrators could provide such formatting for NAS-ARTS and FDIO traffic and the polling of multipointed FDIO facilities, thus allowing the direct connection of the trunk to the packet switch portion of the node.

The following features of this alternative are pertinent to subsequent comparisons:

1. As with Alternatives 2 and 3, the same traffic as handled by Alternative 1 can be accommodated with fewer miles of leased lines.

2. There will be contention for trunk usage.

3. NAS-ARTS communications control functions would be performed by NADIN. Some of those functions otherwise performed by the ARTS computers would be performed by the concentrators.

4. Should a trunk do down, one ARTS and one or more FDIO facilities would be affected.

5. The smaller number of multiplexors/concentrators required, relative to Alternatives 2 and 3, would reduce the likelihood of equipment outages, and hence increase availability.

SECTION 4

ANALYSIS OF ALTERNATIVES

4.1 Introduction

Each of the four alternatives for supporting NAS-ARTS communications has been analyzed in order to develop comparative measures of cost, performance, and other benefits. The analysis performed and results obtained are presented below. Comparisons of these results are presented in Section 5.

4.2 Cost Analysis

The comparative costs of the four alternatives are determined below by calculating the life cycle costs associated with components that differ among the alternatives. The analysis is presented below in three parts:

- General Considerations, including a discussion of life cycle (equivalent monthly) cost calculation and costing guidelines;
- Cost Elements, identifying the major communications elements that differ among the alternatives and the basic associated costs; and
- Cost Calculations, applying the general considerations and basic costs in order to yield comparative costs.

4.2.1 General Considerations

The following sections address the considerations and assumptions that were used in determining the comparative costs.

4.2.1.1 Equivalent Monthly Cost Calculations

Systems, such as those being considered here, generally involve two types of costs -- one-time costs and recurring costs. One-time costs (OCs) relate to hardware purchase, software development, and installation. Such costs occur at the time the system is implemented and may recur after a number of years as the original items must be replaced. Recurring costs (RCs) relate to wages, rentals, maintenance and purchase of consumables. Such costs occur on a regular basis, e.g., monthly or weekly. It is often possible to trade off one type of cost for another, e.g., equipment can be leased rather than bought, or a hardware item might be bought which requires less maintenance than a less expensive similar item.

In order to effectively compare the costs of such systems, it is necessary to determine a life cycle cost which combines one-time and recurring costs into a single form that adequately reflects the trade-offs. This is generally done by calculating either equivalent monthly costs or present values. The former, as the name implies, converts all one-time costs over the life of the system into equivalent recurring costs. The latter converts recurring costs over the life of the system into an equivalent initial one-time cost. With either approach it is then possible to directly add costs from the two categories.

Since the major cost element involved in the systems being considered are monthly leased line costs, it is convenient to use equivalent monthly cost as the basis for comparisons. Thus each one-time cost item will be treated as if the required funds were borrowed at the time of implementation and paid back in fixed monthly installments, including interest, over the life of the item. This concept involves two major parameters — the life of the system (m) and the effective interest rate (i). It is convenient to define m as the number of months considered and i as the effective interest rate per month. It can be shown that if a system element has a one-time cost of OC, the equivalent monthly cost (EMC) can be calculated as:

$$EMC = OC \times i/(1 - (1 + i)^{-m}).$$

4.2.1.2 Assumptions

The following assumptions were used in determining comparative costs:

1. The communications systems considered in this study will have an effective life of 5 years (m = 60 months). Although the equipment involved will have a longer life, the consolidation of TRACONs, the consolidation of ARTCCs, and the implementation of NADIN P2 could limit the useful life. It is further assumed that none of the system components will need replacement during the 5-year period.

2. The effective interest rate will be 10 percent per year (i = 0.8 percent per month).

3. The 171 CONUS ARTS sites identified (in Appendix A) and only those sites will be included in the NAS-ARTS Network before 1985 and no additional sites will be added by 1988.

4. The 284 CONUS FDIO sites identified (in Reference 2) will be the only terminal areas with FDIO facilities in the period from 1985 to 1988.

4.2.1.3 Other Guidelines

Other guidelines applied in determining comparative costs included:

1. For purposes of determining comparative costs, it is not necessary to consider one-time costs that would have been expended or committed prior to 1985. Thus no one-time costs associated with the Current Approach need be considered. Further, any equipment associated with the Current Approach that could be used for the other alternatives (e.g., the 2400 b/s modems) can be considered available at no cost for the other alternatives.

2. Costs for Alternatives 2, 3, and 4 should reflect <u>no</u> credit (salvage value) for equipment used in the Current Approach but not required for those other alternatives.

3. Although NAS 9020R computers may be introduced at two off-shore centers before 1988, NAS-ARTS (and FDIO) traffic to those centers is not considered. General results obtained by considering only CONUS centers should apply equally to the off-shore centers, should such services be activated.

4. The cost analysis does not reflect costs for redundant components or leased lines that may be required to ensure acceptable system availability. Rather such costs are considered later under Availability.

5. Although two CONUS ARTCCs are to be closed by 1985, all 20 CONUS ARTCCs are considered in the analysis. This should have little impact on the cost comparisons, since all associated ARTS and FDIO facilities are to remain (during the period of interest) and are to be associated with other nearby ARTCCs.

4.2.2 Cost Elements

Pertinent one-time and recurring cost components are indicated below for each of the alternatives. Estimates of associated unit costs are also indicated.

4.2.2.1 Alternative 1 Components

As indicated above, no one-time costs associated with Alternative 1, the Current Approach, are considered in this comparison. That system is assumed completed prior to 1985. The major recurring costs for this alternative are the monthly charges for leasing the NAS-ARTS and FDIO circuits.

The leased line charges are estimated using the Multi-Schedule Private Line (MPL) tariffs that were in effect in June 1982. These tariffs include the following recurring charges:

- a termination charge = $36.05 per drop per month, and
- interexchange mileage charges, IXC (see Table 3).

4.2.2.2 Alternative 2 Components

The addition of multiplexing to the Current Approach, under Alternative 2, will result in a number of one-time costs plus changes in the recurring costs due to reconfiguration of the communications links. One-time costs result from the purchase of multiplexors and higher speed modems and from telephone company installation changes associated with the reconfigured links.

ZONE (miles)	SCHEDULE		
	I	II	III
0-1	$73.56	$75.00	$76.43
2-15	2.59	4.77	6.35
16-25	2.16	4.77	5.48
26-40	1.62	2.89	4.03
41-60	1.62	1.95	3.03
61-80	1.62	1.95	2.31
81-100	1.62	1.95	1.95
101-1000	.94	.94	.97
over 1000	.58	.58	.58

Notes:

1. Based on MPL tariffs effective approximately March 1982.

2. Values in table are charges per month per mile within the indicated zone. Thus under Schedule I, the IXC for a 20 mile link would be calculated as follows:

ZONE	MILES	CHARGE
0-1	1	1 x 73.56 = 73.56
2-15	14	14 x 2.59 = 36.26
16-25	5	5 x 2.16 = 10.80
TOTAL	20	$120.62

3. Schedules relate to categorization of connected cities. Cities are categorized as either Category A or B, with Category A including approximately 350 of the largest cities and Category B including all others. The three schedules apply as follows:

   Schedule I - Between two Category A cities.
   Schedule II - Between Category A and Category B cities.
   Schedule III - Between two Category B cities.

TABLE 3. INTEREXCHANGE MILEAGE CHARGES (IXC)

The basis for determining recurring costs are the MPL tariffs outlined above for Alternative 1. Estimates for pertinent one-time costs are as follows:

- 4800 b/s Modem: $1,000-$2,500, Nominal $1,500
- 9600 b/s Modem: $2,000-$3,000, Nominal $2,500
- TDM: $750-$1,500, Nominal $1,000
- STATMUX: $1,000-$3,000, Nominal $1,875
- Installation: $78.05 per drop.

4.2.2.3 Alternative 3 Components

Alternative 3, using local switching to support NAS-ARTS traffic and incorporating multiplexors, will involve costs similar to those for Alternative 2 plus a few additional ones. As with Alternative 2, there will be requirements for higher speed modems, link reconfiguration (installation charges), and multiplexing equipment. Further, this alternative requires a NADIN port for each ARTS site and special NADIN software in order to process the NAS-ARTS traffic.

The basic costs for the new components are as follows:

- NADIN port: $2,000
- Software: $150 per instruction.

4.2.2.4 Alternative 4 Components

Alternative 4, using local switching to support NAS-ARTS traffic but using remote concentrators instead of multiplexors, will involve most of the same cost components as Alternative 3. The only new component introduced by this alternative is the remote concentrator. Relatively simple concentrators, for the limited functions being considered here, would cost about $4,000.

4.2.3 Cost Calculations

Calculation of the total one-time cost (OC) associated with each alternative primarily involves consideration of the system architecture and the number of sites at which various equipment is to be located. Assuming the monthly interest rate, i = 0.008 (10 percent annually), and the system life, m = 60 months, the Equivalent Monthly Cost (EMC) would be:

$$EMC = .02\ OC$$

Calculation of the total recurring cost is less direct, since this involves determination of multiplexor/concentrator locations and multipoint line layouts. Contel Information Systems' proprietary MIND program (Reference 18) has been used to determine near optimal topologies and the associated recurring costs for all pertinent cases.

4.2.3.1 Alternative 1 Cost

As indicated earlier, the only pertinent costs associated with Alternative 1, the Current Approach, are the recurring costs for leased lines. These costs have been determined by the use of MIND for both NAS-ARTS and FDIO circuits. The totals are shown in Table 4. Since there is no one-time cost, the total monthly cost for Alternative 1 is approximately $150,000 per month.

4.2.3.2 Alternative 2 Cost

Under Alternative 2 many of the FDIO links are dropped. FDIO facilities collocated with ARTS facilities will share the NAS-ARTS links to the centers. Either TDMs or STATMUXs could be used to facilitate such line sharing. For convenience in this analysis, however, it will be assumed that two TDMs (at $1,000 apiece) and two 4800 b/s modems (at $1,500 apiece) are used for each shared NAS-ARTS/FDIO link. Reconfigured multipoint lines would continue to be used for FDIO-only sites.

CENTER	MONTHLY COSTS		
	IXC	TERMINATION	TOTAL
Albuquerque	$ 3,397	$ 721	$ 4,118
Atlanta	8,773	1,622	10,395
Boston	6,834	1,478	8,312
Chicago	9,359	1,839	11,198
Cleveland	9,964	1,983	11,947
Denver	3,381	649	4,030
Fort Worth	8,618	1,550	10,168
Houston	8,986	1,550	10,536
Indianapolis	6,363	1,334	7,697
Jacksonville	6,941	1,226	8,167
Kansas City	5,850	1,045	6,895
Los Angeles	6,319	1,550	7,869
Memphis	5,407	1,082	6,489
Miami	3,911	865	3,776
Minneapolis	7,413	1,334	8,747
New York	7,619	1,622	9,241
Oakland	3,600	937	4,537
Salt Lake City	3,348	577	3,925
Seattle	4,649	865	5,514
Washington	5,042	1,190	6,232
TOTAL	$124,774	$25,019	$149,793

TABLE 4. COSTS FOR ALTERNATIVE 1, THE CURRENT APPROACH

Table 5 shows the costs associated with Alternative 2. The recurring costs (Total RC) reflect the IXC and termination costs for the NAS-ARTS links and the reconfigured FDIO links, as determined through the use of MIND. The one-time costs (Total OC) include the multiplexor and modem costs, indicated above, plus installation charges ($78.05 per drop) associated with the reconfiguration. The life-cycle cost (Total EMC) is the sum of the recurring costs and the equivalent monthly costs of the one-time costs. The overall equivalent monthly cost is seen to be approximately $125,000.

4.2.3.3 Alternative 3 and 4 Costs

Because of the similarity of Alternatives 3 and 4 to Alternative 2, it is convenient to identify only the incremental costs. These result from three cost components — multiplexor/concentrator cost, NADIN port costs, and software costs.

Alternative 3 requires the same multiplexors as Alternative 2 and thus has zero incremental cost for that component. It does, however, require one new NADIN port (at $2,000 apiece) for each ARTS facility. Directing the ARTS lines through the NADIN node requires special software for NADIN. It is estimated that a total of 800 software instructions (at $150 per instruction) are required, for a one-time cost of $120,000. Since all other costs are considered on an individual center basis, this can be treated as $6,000 per center.

Alternative 4 will use one concentrator (at $4,000 apiece) instead of each pair of TDMs used under Alternatives 2 and 3 (at $1,000 apiece). Thus there will be an incremental cost of $2,000 per trunk. This alternative will also require a NADIN port (at $2,000 apiece) for each trunk.* Special software for this alternative will be required for NADIN and the remote concentrator. It is estimated that a total of 1,000 software instructions are required, for a total cost of $150,000 or $7,500 per center.

---

*The combined number of FDIO-only and FDIO/NAS-ARTS ports could be reduced for this alternative if the NADIN concentrator function and the new access function were integrated in one hardware unit. However, such integration has not been assumed.

CENTER	TOTAL RC	TOTAL OC	EMC (OC)	TOTAL EMC
Albuquerque	$ 2,851	$ 26,795	$ 636	$ 3,387
Atlanta	7,301	64,137	1,283	8,584
Boston	5,746	58,824	1,176	6,922
Chicago	7,023	77,576	1,552	8,575
Cleveland	7,753	73,278	1,466	9,219
Denver	3,175	21,561	431	3,606
Fort Worth	7,028	53,044	1,061	8,089
Houston	7,934	58,903	1,178	9,112
Indianapolis	5,388	53,434	1,069	6,457
Jacksonville	6,084	48,122	962	7,046
Kansas City	5,132	27,342	547	5,679
Los Angeles	5,813	53,824	1,076	6,889
Memphis	4,785	37,654	753	5,538
Miami	2,925	27,029	514	3,466
Minneapolis	6,060	53,434	1,069	7,129
New York	6,805	53,981	1,080	7,885
Oakland	3,312	32,263	645	3,957
Salt Lake City	2,838	21,405	428	3,266
Seattle	4,291	22,029	441	4,732
Washington	4,553	48,044	961	5,514
TOTAL	$106,797	$912,679	$18,255	$125,052

TABLE 5. COSTS FOR ALTERNATIVE 2, THE CURRENT APPROACH WITH TDMs/STATMUXs

Table 6 summarizes the costs associated with Alternatives 3 and 4. The extra cost for software and concentrators results in an equivalent monthly cost difference of about $7,500, with Alternative 3 having a cost of approximately $134,000 and Alternative 4, $142,000.

4.2.3.4 Comparative Costs

The results of analyzing the separate alternatives are summarized in Table 7. The following generalizations can be drawn by comparing these results:

1. Significant costs savings can be achieved through multiplexing NAS-ARTS and FDIO channels, i.e., through the implementation of either Alternative 2, 3, or 4.

2. The cost savings achieved when both multiplexing and local switching are used (Alternatives 3 and 4) are only from one-third to two-thirds that achieved when only multiplexing is used (Alternative 2).

3. If local switching is employed, use of multiplexor pairs (Alternative 3) can double the cost savings achieved through the use of concentrators (Alternative 4).

4.3 Performance Analysis

The major differences among the alternatives considered are reflected in three areas:

- the use of multiplexing,
- trunk transmission speeds, and
- the use of local switching.

These primarily impact two performance measures:

1. network delays, and
2. circuit availability.

CENTER	TOTAL EMC	INCREMENTAL EMC (OC)		TOTAL EMC	
	ALT. 2	ALT. 3	ALT. 4	ALT. 3	ALT.4
Albuquerque	$ 3,387	$ 320	$ 550	$ 3,707	$ 3,937
Atlanta	8,584	600	1,110	9,184	9,694
Boston	6,922	560	1,030	7,482	7,952
Chicago	8,575	720	1,350	9,295	9,925
Cleveland	9,219	680	1,270	9,899	10,489
Denver	3,606	280	470	3,886	4,076
Fort Worth	8,089	520	950	8,609	4,039
Houston	9,112	560	1,030	9,672	10,142
Indianapolis	6,457	520	950	6,977	7,407
Jacksonville	7,046	480	870	7,526	7,916
Kansas City	5,679	320	550	5,999	6,229
Los Angeles	6,889	520	950	7,409	7,839
Memphis	5,538	400	710	5,938	6,248
Miami	3,466	320	550	3,786	4,016
Minneapolis	7,129	520	950	8,405	8,079
New York	7,885	520	950	8,405	8,837
Oakland	3,957	360	630	4,317	4,587
Salt Lake City	3,266	280	470	3,546	3,736
Seattle	4,732	280	470	5,012	5,202
Washington	5,514	480	870	5,994	6,384
TOTAL	$125,052	$9,240	$16,680	$134,292	$141,732

TABLE 6. COSTS FOR THE NADIN APPROACHES: ALTERNATIVE 3, WITH TDMs/STATMUXs, AND ALTERNATIVE 4, WITH CONCENTRATORS

CENTER	ALT. 1	ALT. 2	ALT. 3	ALT. 4
Albuquerque	$ 4,118	$ 3,387	$ 3,707	$ 3,937
Atlanta	10,395	8,584	9,184	9,694
Boston	8,312	6,922	7,482	7,952
Chicago	11,198	8,575	9,295	9,295
Cleveland	11,947	9,219	9,899	10,489
Denver	4,030	3,606	3,886	4,076
Fort Worth	10,168	8,089	8,609	4,039
Houston	10,536	9,112	9,672	10,142
Indianapolis	7,697	6,457	6,977	7,407
Jacksonville	8,167	7,046	7,526	7,916
Kansas City	6,895	5,679	5,999	6,229
Los Angeles	7,869	6,889	7,409	7,839
Memphis	6,489	5,538	5,938	6,248
Miami	3,776	3,466	3,786	4,016
Minneapolis	8,747	7,129	7,649	8,079
New York	9,241	7,885	8,405	8,837
Oakland	4,537	3,957	4,317	4,587
Salt Lake City	3,925	3,266	3,546	3,736
Seattle	5,514	4,732	5,012	5,202
Washington	6,232	5,514	5,994	6,384
TOTAL	$149,793	$125,052	$134,292	$141,732

Note: Alt. 1 = The Current Approach
Alt. 2 = The Current Approach with TDMs/STATMUXs
Alt. 3 = The NADIN Approach with TDMs/STATMUXs
Alt. 4 = The NADIN Approach with Concentrators

TABLE 7. COMPARATIVE COSTS

4.3.1 Network Delays

The need to transmit NAS-ARTS track data messages in near real-time has been interpreted as requiring network delays to be no greater than one second. Network delays refer only to those delays introduced by the communications system. The alternatives being considered introduce three types of network delays:

- transmission delay (TD),
- queuing delay (QD), and
- node processing delay (PD).

Transmission delay is inversely proportional to the line speed. It is calculated as:

$$TD = ML \times B/S$$

where: ML is the mean gross message length (considering all transmission overhead), in characters,
B is the number of bits per character, and
S is the line speed, in bits per second.

Queuing delay is a function of (peak) link utilization (U). It is calculated as:

$$QD = TD \times U/(1-U)$$

where $U = GT/S$
and GT is the gross (peak period) throughput, in bits per second,

$$= MR \times ML \times B/3600$$

where MR is the peak period message rate, in messages per hour.

Node processing delays relate to message processing by the communications nodes as opposed to the NAS 9020R and ARTS computers. Such delays are negligible for most multiplexors, but could be significant for concentrators. The delay depends on the amount of processing required. It is conservatively estimated that PD will be 0.1 seconds for either Alternative 3 or 4, and negligible for the other alternatives.

4.3.1.1 Alternative 1 Delays

The mean length of a NAS-ARTS message (from center to terminal area) has been determined to be 39.9 9-bit characters for the Current Approach. Thus the transmission delay is:

$$TD = 39.9 \times 9/2400 = 0.15 \text{ seconds.}$$

Using projections for the New York Common IFR Room (the busiest ARTS facility) for the year 1987, the maximum peak period message rate (MR) is 4,490 messages/hour. The gross throughput is determined as:

$$GT = 4{,}490 \times 39.9 \times 9/3600 = 447.88 \text{ b/s}$$

so $U = 447.88/2400 = .1866$

and $QD = 0.15 \times .1866/.8134 = 0.03$ seconds.

The total network delay (ND) for Alternative 1 is thus:

$$ND = TD + QD + PD$$

$$= 0.15 + 0.03 + 0 = 0.18 \text{ seconds.}$$

4.3.1.2 Alternative 2 Delays

The introduction of multiplexing with TDMs to the Current Approach is completely transparent to the system. There is no significant message processing and no line contention. Further, although there is a higher speed trunk, only 2400 b/s is available for each NAS-ARTS channel. Thus the network delay for NAS-ARTS traffic under Alternative 2 is the same as that for Alternative 1, that is,

ND = 0.18 seconds

(Note that if STATMUXs with 4800 b/s modems were used, ND would be even smaller.)

4.3.1.3 Alternative 3 Delays

The use of local switching for NAS-ARTS communications introduces several modifications to the delay calculations. The major change is the added message processing time (PD). In addition, there will be added communications overhead. This overhead is estimated (in the worst case) to double the gross message length, that is,

GML = 80 characters.

However, transmitted characters will each have only 8 bits, that is,

B = 8.

For Alternative 3 using TDMs:

PD = 0.1 seconds
TD = 80 x 8/2,400 = 0.27 seconds
GT = 4,490 x 80 x 8/3600 = 798.22 b/s
U = 798.22/2,400 = .3326
QD = 0.27 x .498 = 0.13 seconds
ND = 0.17 + 0.13 + 0.1 = 0.50 seconds.

(As with Alternative 2, this delay would be reduced if STATMUXs were used.)

4.3.1.4 Alternative 4 Delays

For Alternative 4, NAS-ARTS and FDIO traffic contend for use of the same (4,800 - 9,600 b/s) channel. FDIO has been projected to add 766 messages with a mean gross length of 120 8-bit characters. Thus the gross throughput (GT) would be:

$$GT = 798.22 + (766 \times 120 \times 8/3600)$$

$$= 1002.5 \text{ b/s.}$$

For NAS-ARTS messages (assuming a 4800 b/s line):

$$TD = 80 \times 8/4800 = 0.13 \text{ seconds.}$$

In calculating the queuing delay, however, the mean transmission time (delay) for all messages must be considered. The average message length (ML') would be:

$$ML' = [(80 \times 4{,}490) + (120 \times 766)]/(4{,}490 + 766)$$

$$= 85.8 \text{ characters}$$

and the average transmission time (TD') would be:

$$TD' = 85.8 \times 8/4800 = 0.14 \text{ seconds.}$$

Thus $U = 1{,}002.5/4{,}800 = 0.21$

$QD = 0.14 \times 0.21/0.79 = 0.04$ seconds

and

$ND = 0.13 + 0.04 + 0.1 = 0.27$ seconds.

4.3.2 Availability

Availability refers to the probability that a (NAS-ARTS) communications circuit can be provided when desired. Only the communications elements of the circuit are considered, i.e., the availability of the NAS 9020R and the ARTS computers are not considered.

If the circuit involves no redundant elements, as is the case for Alternatives 1 and 2, a circuit is available only if all the communications components are available. The availability (A) of a component is calculated as:

$$A = MTBF/(MTBF + MTTR)$$

where MTBF is the mean time between failures, and
MTTR is the mean time to repair or replace.

Table 8 shows typical parameter values and associated values of A for the various components being considered.

Component	MTBF (hrs)	MTTR (hrs)	A
Modem	10,000	.25	.99998
Line Link	1,000	1.0	.99901
Multiplexor	12,000	.75	.99994
Concentrator	12,000	.75	.99994

TABLE 8. COMPONENT AVAILABILITIES (A)

Alternative 1 circuits include only a single line link and two modems. Thus the probability that random circuits are available (P_1) would be:

$$P_1 = .99901 \times .99998^2 = .99897.$$

Alternative 2 adds two TDMs to each NAS-ARTS circuit. Thus:

$$P_2 = P_1 \times .99994^2 = .99885.$$

Alternatives 3 and 4 introduce the NADIN node into the circuit. The NADIN node will have a multiprocessor design, which is effectively the same as having redundant equipment. Assuming each redundant component has the same availability as a concentrator, and assuming that there are two redundant components, the probability that at least one component is available (R) would be:

$$R = (2 \times .99994) - .99994^2 = 1.00000.$$

Thus the NADIN node can be considered always available and need not be considered in the calculations.

Alternative 3 includes the same components (other than the NADIN node) as Alternative 2. Thus:

$$P_3 = P_2 = .99885.$$

Alternative 4, however, includes only a single remote concentrator, instead of two TDMs. Thus:

$$P_4 = P_1 \times .99994 = .99891.$$

These results indicate that Alternative 1 offers the greatest availability; however, there would be little reduction in availability by going to any of the other alternatives. Availability could be improved by adding redundant components, especially line links, the

least reliable component. The expense of such redundancy could not generally be justified by the small differences noted. If, however, the availability of Alternative 1 is felt to be too low for FAA requirements, redundancy would be justified for all alternatives.

4.4 Other Considerations

The analyses outlined above provided quantitative comparisons among the alternatives being considered. The discussions below focus on comparisons that cannot be as easily quantified. Areas of comparison covered are:

- throughput,
- accuracy,
- flexibility,
- impact on center computer resources, and
- requirements of other FAA programs.

4.4.1 Throughput

Throughput relates to the maximum NAS-ARTS message traffic that each alternative can accommodate. The physical system has a limit based on the line speed, e.g., 2400 b/s or 4800 b/s. However, communications overhead, including header/trailer characters, retransmissions, control messages, etc., make it impossible to achieve an effective throughput equal to the line speed.

The throughput for Alternative 2 using TDMs will be essentially the same as for Alternative 1, since only 2400 b/s of the 4800 b/s line capacity is available for the NAS-ARTS channel. If, however, STATMUXs with 4800 b/s modems are used, the NAS-ARTS throughput would be increased. The combined NAS-ARTS and FDIO throughput would be essentially twice that for NAS-ARTS traffic under Alternative 1, but FDIO traffic would generally require less capacity than NAS-ARTS traffic.

The throughput for Alternative 4, using concentrators, would similarly be greater than that for Alternative 3 using TDMs. Relative to Alternatives 1 and 2, however, Alternatives 3 and 4, with the more sophisticated NADIN communications control, would introduce more overhead and hence have reduced throughput. At worst, the added overhead could halve the effective throughput in comparison with Alternatives 1 and 2.

4.4.2 Accuracy

Accuracy in this analysis is primarily concerned with data signal errors introduced by the communications channel (as opposed to the originating computer or terminal). Error generation is generally a function of the quality of the transmission media. Since all alternatives being considered use leased lines, there should be little difference in the error rate.

A second consideration related to accuracy is the ability of the network to detect errors that do occur and to take corrective actions. The added communications overhead for Alternatives 3 and 4, discussed above, is in large part associated with the detection and retransmission of data in error. As a result, Alternatives 3 and 4 provide for greater overall accuracy than Alternatives 1 and 2.

4.4.3 Flexibility

Flexibility relates to the ability to use the system in other ways and for other purposes than it was designed. Generally the more flexible systems will have a longer useful life and hence be more cost effective.

Alternative 1 offers little flexibility. It includes connections only between ARTS computers and NAS 9020R computers. Some flexibility is offered by the excess capacity on the links; this was the basis for the multiplexing incorporated in Alternative 2.

The major features that offer flexibility in the alternatives considered are:

- use of STATMUXs or concentrators, and
- use of local switching.

STATMUXs and concentrators provide for dynamic allocation of link capacities. Thus the number of channels and data rate on individual channels are not as restricted as when TDMs are used. In particular, it may often be possible to have traffic from other nearby facilities share the trunks to the ARTCC. Concentrators provide the added flexibility inherent in their processing capabilities. This is discussed in further detail later.

Local switching provides greater flexibility in interconnections. Thus, although all NAS-ARTS and FDIO traffic on a specific trunk is associated with the NAS 9020R at a specific center, other types of NADIN traffic (e.g., ARTS-ARTS or FSAS) might also share underutilized trunks.

The local switching approach with concentrators (Alternative 4) would thus be the most flexible approach. The current approach (Alternative 1) would be the least flexible.

4.4.4 Impact on Center Computer Resources

It was suggested earlier that a major benefit of using local switching to support NAS-ARTS communications was the potential for reducing requirements for NAS 9020R PAM adaptors and communications control processing. It appears, however, that in the period prior to 1988 only those software changes for the NAS 9020 that are currently programmed will be permitted. This would rule out software changes to redirect NAS-ARTS traffic through a single NADIN interface and changes to eliminate communications control functions for NAS-ARTS traffic.

If local switching support for NAS-ARTS communications were provided in the period from 1985 to 1988, the individual NAS-ARTS links from the NAS 9020 PAM would have to be directed to the new network access function, which would emulate ARTS facilities. The major advantage of such an approach would be the fact that NADIN would handle most retransmissions and other special link control functions. Thus although the NAS 9020 would retain the control software, the control processing would be somewhat reduced. As a result, the local switching approaches (Alternatives 3 and 4) represent a slight benefit with respect to demands on the NAS 9020R when compared with the other approaches (Alternatives 1 and 2).

It is worth noting that the maximum benefit from local switching support for NAS-ARTS (and other) traffic would be achieved if the NAS 9020R included an X.25 packet level interface to the NADIN packet switch function. Ideally, this interface would be used for NAS-ARTS, FDIO, NAS-NAS, and other pertinent traffic. This would significantly reduce requirements for PAM adaptors and NAS 9020R communications control processing, and it would also ensure improved response times and throughput relative to NADIN support.

4.4.5 Requirements of Other FAA Programs

There are a number of FAA programs to be implemented after 1988 which will impact NAS-ARTS communications. These include:

1. Terminal Sector Suites/Terminal Computer Replacement,
2. Terminal Hub Consolidation/Terminal-to-Center Integration, and
3. Center Consolidation/Center Back-up.

The implementation of the replacement computers and Sector Suites at the terminal areas is expected to have two major effects on NAS-ARTS communications. First, there would be no separate NAS-ARTS and FDIO traffic. Thus the multiplexors or concentrators purchased if Alternative 2, 3, or 4 were adopted would be of use only if some other traffic from the terminal areas were to share the links. The non-ATC traffic to and from terminal area Mode S sites, for example, could benefit from such link sharing. Second, the enhanced capabilities provided by the new terminal area equipment would be expected to generate additional data traffic to and from the center computers. The higher speed modems associated with the multiplexed trunks and the Alternative 4 remote concentrators would facilitate the accommodation of the increased traffic.

The consolidation of approach control facilities into ARTCCs and TRACON hubs will reduce the number of NAS-ARTS-type links required from 171 to about 30 by 1992. Thus, much of the special equipment that might be purchased as part of Alternatives 2, 3, and 4 would have a limited life. This has already been reflected in the cost analysis by considering an equipment life cycle of only 5 years.

The consolidation of ARTCCs and the implementation of a center back-up program, whereby each center is prepared to take over at least some functions from other (down) centers, impacts NAS-ARTS-type communications primarily in terms of the dynamic interconnection requirements. The interconnection flexibility afforded by NADIN switching would greatly facilitate association of a terminal area with a new center. The use of multiplexing would minimize the number of separate lines that might have to be rerouted.

In summary, the FAA programs considered above would:

- drastically reduce the number of NAS-ARTS-type links required,
- possibly increase the traffic on the remaining links, and
- make interconnection flexibility (i.e., the local switching approach) highly desirable.

SECTION 5

OVERALL COMPARISON

5.1 Introduction

On the basis of cost alone, the preceding analyses indicate that the most efficient approach to NAS-ARTS communications would be to add multiplexing to the current NAS-ARTS Network (Alternative 2) in order to share NAS-ARTS trunks with FDIO traffic. Other elements of the analysis indicate, however, that the higher costs of other alternatives are generally associated with other benefits. This appears particularly true for the local switching approach using remote concentrators (Alternative 4).

5.2 Areas of Comparison

The approaches considered for supporting NAS-ARTS communications have been analyzed relative to eight characteristics:

- cost, in terms of equivalent monthly costs;
- network delay, in terms of the added end-to-end transmission time contributed by communications components;
- availability, in terms of the probability that a random NAS-ARTS circuit is up;
- throughput, reflecting the maximum NAS-ARTS traffic that could be accommodated;
- accuracy, reflecting the ability of the communications elements to detect errors and take corrective action;
- flexibility, reflecting the ability of the system to be used for purposes and in ways other than originally planned;

- impact on center computer resources, reflecting the requirements for center computer interfaces and communications-related processing; and

- requirements of other programs, reflecting compatibility with requirements of the evolving ATC system.

None of the alternatives considered stand out as the most desirable across the board relative to these characteristics. Each has advantages and disadvantages. These are summarized in Table 9.

5.3 Evaluation

In order to provide a more objective comparison, quantitative ratings have been assigned for each characteristic. Earlier analyses provided quantitative measures for only three of the characteristics -- cost, network delay, and availability. These are summarized in Table 10. Ratings for these and the more subjective characteristics have been developed using the following criteria:

- The alternative judged best relative to a specific characteristic is assigned a rating of 10.

- Other alternatives are assigned ratings for that characteristic in the range from 1 to 10.

- A rating of 5 is considered adequate or acceptable.

Table 11 presents the assigned ratings. The information shown can be summarized as follows:

1. None of the alternatives are found inadequate or unacceptable relative to any of the eight characteristics.

ALTERNATIVE	MAJOR ADVANTAGES	MAJOR DISADVANTAGES
1. The Current Approach	• Lowest network delay • Highest availability • High throughput	• Highest cost • Lowest accuracy • Least flexible • Greatest demand on NAS 9020R resources • Least compatible with other FAA programs
2. The Current Approach with Multiplexing	• Least cost • Lowest network delay • Highest throughput	• Lowest availability • Lowest accuracy
3. The Local Switching Approach with TDMs/ STATMUXs	• Highest accuracy • Least demand on NAS 9020R resources	• Greatest network delay • Lowest availability • Lowest throughput
4. The Local Switching Approach with Concentrators	• Highest accuracy • Most flexible • Most compatible with NAS 9020 Replacement Program • Most compatible with other FAA programs	• High cost • Low throughput

TABLE 9. MAJOR ADVANTAGES AND DISADVANTAGES OF ALTERNATIVES

ALTERNATIVE	COST (EMC)	NETWORK DELAY (SECS)	AVAILABILITY
1	$150,000	0.18	.99897
2	$125,000	0.18	.99885
3	$134,000	0.50	.99885
4	$142,000	0.27	.99891

Note:

Alternative 1 = The Current Approach

Alternative 2 = The Current Approach with TDMs/STATMUXs

Alternative 3 = The Local Switching Approach with TDMs/STATMUXs

Alternative 4 = The Local Switching Approach with Concentrators

TABLE 10. QUANTITATIVE COMPARISONS

CHARACTERISTIC	RATING FOR ALTERNATIVE: 1	2	3	4
Cost	7	10	9	8
Network Delay	10	10	6	9
Availability	10	9	9	10
Throughput	9	10	7	8
Accuracy	9	9	10	10
Flexibility	6	8	9	10
Demands on NAS 9020R	6	8	10	10
Compatibility with other programs	8	9	9	10

Notes:

Alternative 1 = The Current Approach
Alternative 2 = The Current Approach with TDMs/STATMUXs
Alternative 3 = The Local Switching Approach with TDMs/STATMUXs
Alternative 4 = The Local Switching Approach with Concentrators

Ratings:

10 = best among alternatives
5 = adequate/acceptable

TABLE 11. COMPARATIVE RATINGS

2. The local switching approach with concentrators (Alternative 4) is as good or better than the local switching approach with TDMs (Alterrnative 3) with respect to all characteristics except cost.

3. The current approach with multiplexing (Alternative 2) is as good or better than the current approach without multiplexing (Alternative 1) with respect to seven of the eight characteristics. For the one characteristic in which Alternative 1 is better (Availability), Alternative 2 is, nevertheless, almost as good.

4. Alternative 2 is significantly better than Alternative 4 with respect to cost, and throughput and slightly better relative to network delay.

5. Alternative 4 is significantly better than Alternative 2 with respect to flexibility and demands on NAS 9020R resources, and slightly better relative to availability, accuracy, and compatibility with other FAA programs.

5.4 Conclusions and Recommendations

This analysis has identified two highly desirable alternatives for supporting NAS-ARTS communications:

- Alternative 2, The Current Approach with Multiplexing, and

- Alternative 4, The Local Switching Approach Using Concentrators.

Both are ranked high relative to all characteristics considered. Each has some advantages over the other. The preferred alternative thus depends on the relative importance of the individual characteristics.

However, subjective review of the identified differences suggests a preference for Alternative 2. This conclusion is based on the following considerations:

- The key perceived advantage of Alternative 4, its reduced demands on the NAS 9020R, cannot be fully realized until the NAS 9020R is given an X.25 interface to NADIN. This is unlikely in the period of interest.

- The other major advantage of Alternative 4 over Alternative 2, greater flexibility, primarily relates to support of other communications or to support of NAS-ARTS communications after 1988. These must be considered to be of only secondary importance in this study of support for NAS-ARTS communications in the period 1985-1988.

- The benefits of the above advantages appear insufficient to offset the associated cost and throughput disadvantages.

It is thus recommended that:

1. For the period 1985-1988, local switching of NAS-ARTS communications at the NADIN nodes not be implemented.

2. Multiplexors and higher speed modems be purchased to permit the use of NAS-ARTS links as shared trunks for ARTCC-to-terminal area data communications (including specifically NAS-ARTS and FDIO traffic, and possibly Mode S traffic).

3. TDMs (rather than STATMUXs) be purchased in order to provide greater simplicity and transparency to synchronous traffic despite some loss in potential throughput.

APPENDIX A

NAS-ARTS MESSAGE TRAFFIC PROJECTIONS

APPENDIX A

NAS-ARTS MESSAGE TRAFFIC PROJECTIONS

A.1 PURPOSE AND SCOPE

Analysis of intercomputer communications between an ARTCC and ARTS sites required quantitative estimates of the message traffic between those sites. Since such estimates were not directly available, it was necessary to develop a model capable of deducing approximate message traffic volumes from more readily available data. This was feasible, since most NAS-ARTS messages are related to IFR aircraft activity in terminal areas served by ARTS facilities. Actual and projected data of this type are published annually by FAA.

This appendix presents a detailed description of the model developed. It also presents the basic data collected for use in model development and in the application of the model. Finally it presents the results of applying the model to yield data required for the study of NAS-ARTS communications.

A.2 MODEL OVERVIEW

The model developed provides analytic expressions for estimating the number of messages transmitted in each direction on specific NAS-ARTS links during a busy hour, and the average number of characters per message. The model requires as input:

1. the number of annual instrument operations (actual or projected for a specific year), for each specific ARTS site,

2. the fraction of those operations that are related to IFR flights (as opposed to separation support for non-IFR flights), and

3. the fraction of the IFR instrument operations that are related to overflights (as opposed to arrivals and departures from airports).

The latter two categories of inputs are best determined separately for each ARTS facility; however, national averages can be used.

A.2.1 General Approach

The model considers an individual NAS-ARTS link, i.e., the real or hypothetical link between one ARTS computer and the NAS 9020 computer at the associated ARTCC. Almost all messages on that link are related to the expectation of IFR aircraft arrivals, departures, and overflights within the designated area of control for that ARTS facility.

Thirteen types of messages are currently transmitted on NAS-ARTS links. These range from flight plans to simple acknowledgments of flight plans received. The model essentially associates a typical sequence of message exchanges with each IFR arrival, departure, and overflight. It is thus possible to estimate the message traffic from estimates (projections) of IFR aircraft traffic.

The message counts calculated as suggested above do not reflect messages (e.g., test messages) whose transmission is independent of air traffic. To account for such messages, to compensate for model uncertainties, and to generally insure use of conservative traffic estimates, the calculated message counts are modified (increased) by an adjustment factor.

A.2.2 Major Model Components

The model for estimating NAS-ARTS message traffic characteristics has three major components; these described in detail in Section A.3:

1. Instrument Operations Disaggregation. The first model component estimates busy-hour IFR arrivals, departures, and overflights for each ARTS facility.

2. Message Traffic Derivation. The second component estimates the number of each type of message transmitted during a busy hour, based on the estimated IFR activity. It then determines the aggregate busy-hour message traffic.

3. Message Lengths. The final component estimates the relative frequencies for each message type, and uses those frequencies to estimate the average message length.

A.2.3 Data Sources

Information and data used in the development and application of this model were obtained from a number of sources. Five, in particular, were found to be most useful:

1. NAS-MD-610, ARTS III Interfacility Data Transfer (Reference 9), provided general information on NAS-ARTS message traffic.

2. NAS-MD-601, ICD, NAS En Route Stage A-ARTS III (Reference 8), provided detailed information on NAS-ARTS messages.

3. FAA-AVP-79-12, Terminal Area Forecasts (Reference 15), provided projections of annual instrument operations for individual sites.

4. FAA-RD-76, Automated Flow Control Interim Communications (Reference 16), provided average message lengths and relative message frequencies for similar (NAS-NAS) messages.

5. Unpublished FAA computer printouts provided instrument operation breakouts at individual sites for 1979.

A.3 MODEL DETAILS

As indicated above, the model involves three major components. Each is discussed below.

A.3.1 Instrument Operations Disaggregation

Projection of instrument operations of individual FAA sites are available (Reference 15) as annual counts, aggregating IFR arrivals, IFR departures, IFR overflights, and IFR separation for non-IFR flights. These counts include instrument support for both the primary airport and for secondary airports (i.e., those without their own IFR facilities). Except for the support of non-IFR flights, these counts for an ARTS site reflect exactly the operations that generate most NAS-ARTS message traffic.

The annual instrument operations counts (IOPS) can be converted into busy-hour IFR activity counts (HIFR), using:

$$HIFR = IOPS \times FIFR \times BHF$$

where FIFR = the average fraction of the instrument operations that are associated with IFR flights, and

BHF = the busy-hour factor, i.e., the ratio of busy-hour instrument operations to annual instrument operations.

The fraction of IFR instrument operations, FIFR, can be obtained for each ARTS site from computer printouts (available through AAT-12) showing the composition of instrument counts. This fraction can be expected to remain relatively constant from year to year. Based on 1979 data, the national average for FIFR would be 0.76.

A constant busy-hour factor, BHF = .00035, has been used for all ARTS sites. This value is generally consistent with detailed data from 286 air carrier airports (Reference 17), summarized in Table A-1. A value less than the average shown in the table has been used for the following reasons:

- As air traffic increases in the future, lower values for this factor can be expected at more airports.

- Use of the higher (average) value would drastically overestimate the aircraft traffic, and hence the message traffic for the busier terminal areas, e.g., the BHF for O'Hare Airport in Chicago was .00019. It is the busier terminal areas that will drive the system design.

- The value selected has been used in a number of other FAA studies (see, for example, Reference 2).

The busy-hour IFR activity can be disaggregated into estimates of IFR arrivals (NA), departures (ND), and overflights (NO). Specifically:

AIRPORT SIZE CATEGORY, ANNUAL INSTRUMENT OPERATIONS (1,000s)	NO. OF AIRPORTS*	TOTAL ANNUAL INSTRUMENT OPERATIONS (1,000s)	BUSY HOUR INSTRUMENT OPERATIONS	BUSY HOUR FACTOR BY CATEGORY	BUSY HOUR FACTOR CUMULATIVE
Over 300	36	16,003	5,110	.00032	.00032
100 - 300	75	12,580	5,657	.00045	.00038
50 - 100	36	2,555	1,481	.00058	.00039
25 - 50	45	1,615	1,170	.00072	.00041
10 - 25	70	1,219	1,411	.00116	.00044
Under 10	24	142	235	.00165	.00044
TOTAL	286	34,116	15,064	.00044	

* All data in table reflects only air carrier airports.

Source: Terminal Area Air Traffic Relationships (Peak Day/Busy Hour), Fiscal Year 1979, FAA Office of Management Systems.

TABLE A-1: BUSY-HOUR FACTORS

$$NO = HIFR \times FOF$$

$$NA = ND = (HIFR - NO)/2$$

$$= HIFR\ (.5 - .5\ FOF)$$

where FOF = the fraction of IFR operations that involve overflights.

Thus $NA + ND + NO = HIFR$

and $NA + NO = ND + NO = HIFR\ (.5 + .5\ FOF)$

The overflights factor, FOF, can be deduced for each site from the same computer printouts referred to for FIFR above. Based on the 1979 data, the national average for FOF is 0.10. As implied above, it is assumed that the number of IFR arrivals equals the number of IFR departures for each ARTS facility during a busy hour.

Using the national average values for FIFR and FOF yields:

$$NO = .000{,}027 \times IOPS$$
$$NA = ND = .000{,}120 \times IOPS.$$

A.3.2 Message Traffic Derivation

The IFR activity counts can be used to deduce individual NAS-ARTS message frequencies. There are 13 types of NAS-ARTS messages grouped into four categories, as follows:

- Flight Data Messages
  - Flight Plans (FP)
  - Amendments (AM)
  - Cancellations (CX)
  - Departures (DM)
  - Terminate Beacon (TB)

- Track Data Transfer Messages
    - Initiate Transfer (TI)
    - Track Update (TU)
    - Accept Transfer (TA)
- Responses
    - Acceptance (DA)
    - Rejection (DR)
    - Retransmit (DX)
- Test Messages
    - Data Test (DT)
    - Test Data (TR)

All but the flight data messages can be originated by either the ARTS or the NAS computers. The first three flight data messages (FP, AM, and CX) can be originated only by the NAS 9020 computers; the other two (DM and TB) can be originated only by the ARTS computers.

All but the test messages (DT and TR) are directly or indirectly related to IFR aircraft activity. The relative frequency of test messages is very small; thus they are ignored in the individual message analyses. They are, however, reflected through the adjustment factor, discussed later.

A response (DA, DX, or DR) is required for each flight data message and each TI and TA track data transfer message received. It has been conservatively assumed that each message which is not accepted (via a DA response) will be retransmitted. The fraction of pertinent messages that would not be accepted has been estimated from data available for the Computer B (NAS-NAS) Network (Reference 16), which involves similar facilities and similar message traffic. Those data, summarized in Table A-2, suggest that .310 of all messages are acceptances (DA) and .007 are rejections (DR). Retransmit responses (DX) were insignificant. Thus, .317 of all messages were responses, and (.007/.317 =.022) 2.2 percent of all messages requiring a response were not accepted. It has therefore been assumed that 2.2 percent of all pertinent NAS-ARTS messages (FP, AM, CX, DM, TB, TI, and TA) would be retransmitted.

Message Type	Relative Frequency	Message Lengths (characters)			Coeff. of Var.
		Average	Maximum	Minimum	
TI	.082	44.2	49	38	.10
TU	.367	33.8	88	28	.25
TA	.077	25.4	30	22	.08
FP	.092	79.1	372	52	.34
AM	.062	55.8	254	29	.45
RS	.002	26.5	30	25	.09
DA	.310	28.1	36	23	.24
DR	.007	23.9	32	19	.56
ALL	1.000	37.7	372	19	.54

Notes:

Coefficient of Variation = Sample Standard Deviation/Average Length.
Message Length includes all current overhead characters.

Source: Automated Flow Control Interim Communications, FAA-RD-76
August 1976.

TABLE A-2: NAS-NAS MESSAGE LENGTH DISTRIBUTIONS

Individual message frequencies can be determined as below:

FP. A flight plan is transmitted from the NAS 9020 computer to the ARTS computer for each IFR arrival, departure, and overflight within the designated area for the ARTS facility. Thus the expected number of FP messages (NFP) during a busy hour will be (including retransmissions):

$$NFP = (NA + ND + NO) \times 1.022$$
$$= 1.022 \times HIFR.$$

It is convenient for the subsequent discussions to represent this value by the symbol G, that is,

$$G = 1.022 \times HIFR.$$

AM. Amendment messages relate to flight plans previously transmitted from the NAS 9020 computer. Based on the NAS-NAS message traffic statistics in Table A-2, the ratio of AM messages to FP messages is (.062/.092) 0.67. Thus the expected number of AM messages (NAM) during a busy hour will be (including retransmissions):

$$NAM = 0.67 \times NFP$$

$$= G \times 0.67.$$

CX. NAS-ARTS flight plan cancellation messages are the counterpart of NAS-NAS remove strip (RS) messages. Based on the data in Table A-2, the ratio of such messages to FP messages is (.002/.092) 0.022. The expected number of CX messages (NCX) during a busy hour will thus be (including retransmissions):

$$NCX = 0.022 \times NFP$$

$$= G \times 0.022.$$

DM. A departure message is transmitted from the ARTS computer to the NAS 9020 computer whenever an IFR flight departs an airport within the ARTS facility's designated area of control. Thus the expected number of DM messages (NDM) during a busy hour will be (including retransmissions):

$$NDM = ND \times 1.022$$

$$= HIFR \times (.5 - .5\ FOF) \times 1.022$$

$$= G \times (.5 - .5\ FOF).$$

TB. The ARTS computer transmits a terminate beacon message to the NAS 9020 computer when its tracking of an IFR flight is completed. Thus there will generally be one such message for each IFR arrival, departure, and overflight. The expected number of such messages (NTB) during a busy hour will therefore be (including retransmissions):

$$NTB = (NA + ND + NO) \times 1.022$$

$$= G.$$

TI. An initiate transfer message is transmitted from the NAS 9020 computer to the ARTS computer whenever an IFR flight is about to enter the designated control area for the ARTS facility. Thus there would be one such message for each IFR arrival and overflight within the area. Similarly a TI message is transmitted from the ARTS computer to the NAS 9020 whenever an IFR flight leaves the area. Thus there would be one such message for each IFR departure and overflight within the area. Since the number of arrivals (NA) and number of departures (ND) during a busy hour are assumed to be equal in each ARTS' area, the expected number of TI messages (NTI) during the busy hour will be the same in both directions of transmission. This will be (including retransmissions):

$$NTI = (NA + NO) \times 1.022$$

$$= HIFR \times (.5 + .5\ FOF) \times 1.022$$

$$= G \times (.5 + .5\ FOF).$$

TU. Track update messages transfer track data on IFR flights for which transfers have been initiated but not completed. The originator (NAS or ARTS computer) continues to send such messages until the transfer is completed or is cancelled by the originator. From the data in Table A-2, the average number of TU messages transmitted per TI message over the NAS-NAS links is (.367/.082) 4.48. This same ratio is assumed to hold for NAS-ARTS links. Thus the expected number of TU messages (NTU) transmitted during a busy hour in either direction on a NAS-ARTS link will be:

$$NTU = 4.48 \times NTI$$

$$= G \times (2.24 + 2.24\ FOF).$$

TA. An accept transfer message concludes the sequence of track data transfer messages initiated by a TI message. Generally the TA message is originated by the receiver of a TI message, indicating acceptance. On occasion, when the decision to transfer is recinded (possibly due to an overly long period without an acceptance), the originator of the TI message will originate the TA message, indicating cancellation of the transfer rather than acceptance. Assuming that such cancellations are equally likely to occur for both directions of transfer, the expected number of TA messages (NTA) transmitted in either direction will be (including retransmissions):

$$NTA = NTI$$

$$= G \times (.5 + .5\ FOF).$$

DA. As indicated earlier, 2.2 percent of all messages requiring a response are not accepted, and so 97.8 percent are accepted. This applies to both original and retransmitted messages. Thus the expected number of DA messages (NDA) transmitted from the NAS computer to the ARTS computer during a busy hour will be:

$$NDA = .978 \times (NDM + NTB + NTI + NTA)$$

$$= G \times (2.45 + .49\ FOF).$$

Similarly, for DA responses from the ARTS computer to the NAS computer:

$$NDA = .978 \times (NFP + NAM + NCX + NTI + NTA)$$

$$= G \times (2.63 + .98\ FOF).$$

DR and DX. All messages requiring a response that are not accepted are responded to with either a DR or DX message. The expected number of such messages (NDR) transmitted from the NAS computer to the ARTS computer during a busy hour will be:

$$NDR = .022 \times (NDM + NTB + NTI + NTA)$$

$$= G \times (.05 + .01\ FOF).$$

For responses from the ARTS computer to the NAS computer:

$$NDR = .022 \times (NFP + NAM + NCX + NTI + NTA)$$

$$= G \times (.06 + .02\ FOF).$$

All Messages. The above expressions for individual message frequencies are summarized in Table A-3. The aggregate message frequencies (NTOT) is seen to be the same for both directions of transmission, that is,

$$NTOT = G \times (7.43 + 3.74\ FOF).$$

Using the national averages for FOF and FIFR, this becomes:

$$NTOT = G \times 7.804$$

$$= .0021 \times IOPS.$$

MESSAGE TYPE	BUSY HOUR MESSAGES FROM:	
	NAS TO ARTS	ARTS TO NAS
FP	G	-
AM	G x 0.67	-
CX	G x 0.02	-
DM	-	G x (0.50 - 0.50 FOF)
TB	-	G
TI	G x (0.50 + 0.50 FOF)	G x (0.50 + 0.50 FOF)
TU	G x (2.24 + 2.24 FOF)	G x (2.24 + 2.24 FOF)
TA	G x (0.50 + 0.50 FOF)	G x (0.50 + 0.50 FOF)
DA	G x (2.45 + 0.49 FOF)	G x (2.63 + 0.98 FOF)
DR/DX	G x (0.05 + 0.01 FOF)	G x (0.06 + 0.02 FOF)
TOTAL (NTOT)	G x (7.43 + 3.74 FOF)	G x (7.43 + 3.74 FOF)

NOTES: G = 1.022 x .00035 x FIFR x IOPS

FIFR = fraction of instrument operations associated with IFR flights.

IOPS = annual instrument operations for specific ARTS facility.

FOF = ratio of IFR overflights to total IFR activity.

TABLE A-3: SUMMARY OF CALCULATIONS FOR NAS-ARTS MESSAGE FREQUENCIES

The above analysis reflects most of the expected NAS-ARTS message traffic and, through the variable IOPS, reflects the expected growth in such traffic over time. In addition to the messages considered, there will be others, e.g., test messages, flight plans with associated amendments that are subsequently cancelled, and track initiate messages with associated updates that are subsequently cancelled. Further it can be anticipated that automation of additional ATC functions will, over time, add other NAS-ARTS messages. To account for such messages and other uncertainties associated with the model, conservative adjustment factors have been used:

- 1.20 for the 1983-1985 timeframe, and
- 1.25 for the 1985-1988 timeframe.

These factors, increasing the calculated estimates by 20 and 25 percent, will insure that any communications system design derived from subsequent analyses will be robust.

A.3..3 Message Lengths

Estimates of NAS-ARTS message lengths have been generated using the above expressions for frequencies of individual message types and two major assumptions:

1. The average length for each type of NAS-ARTS message is approximately the same as that for the similar type of NAS-NAS message.

2. The average length over all NAS-ARTS message types is approximately the same for all links (but possibly different for the two directions on each link).

The first assumption suggests the use of the average NAS-NAS message lengths shown in Table A-2 for pertinent NAS-ARTS messages. The corresponding message types and associated average lengths are shown in Table A-4. Using those average message lengths, the overall average length (LTOT) can be calculated using:

i	NAS-ARTS MESSAGE TYPE	RELATIVE FREQUENCY, F(i)		CORRESP. NAS-NAS MSG. TYPE	AVERAGE LENGTH, L(i) (CHARACTERS)	WEIGHTED LENGTH F(i) x L(i)	
		NAS TO ARTS	ARTS TO NAS			NAS TO ARTS	ARTS TO NAS
1	FP	.128	-	FP	79.1	10.2	-
2	AM	.086	-	AM	55.8	4.8	-
3	CX	.003	-	RS	26.5	.1	-
4	DM	-	.058	AM	55.8	-	3.2
5	TB	-	.128	RS	26.5	-	3.4
6	TI	.070	.070	TI	44.2	3.1	3.1
7	TU	.316	.316	TU	33.8	10.7	10.7
8	TA	.070	.070	TA	25.4	1.8	1.8
9	DA	.320	.350	DA	28.1	9.0	9.8
10	DR/DX	.007	.008	DR	23.9	.2	.2
Average Message Length, LTOT						39.9	32.2

TABLE A-4: ESTIMATED NAS-ARTS MESSAGE LENGTH DISTRIBUTIONS

$$LTOT = \sum_i F(i) \times L(i)$$

where $L(i)$ = the average length of message type i,

$F(i)$ = the relative frequency of type i on the NAS-ARTS link,

= $N(i)/NTOT$, and

$N(i)$ = the expected frequency of type i NAS-ARTS messages (NFP, NAM, NCX, etc.).

Thus, considering the TI messages (i=6), for example:

$$F(6) = (0.50 + 0.50\ FOF)/(7.43 + 3.74\ FOF).$$

The second assumption, above, suggests that the national average value of FOF (0.10) can be used for such calculations. Thus:

$$F(6) = 0.070.$$

In a similar manner, values for F(i) have been calculated for each message type, for both directions of transmission. These are shown in Table A-4. The "weighted length" column shows the products, F(i)xL(i), and the sums, LTOT, for each direction of transmission. Thus the average length of a message from a NAS 9020 computer to an ARTS computer would be 39.9 characters; the average from an ARTS computer to a NAS computer would be 32.2 characters.

A.4 MODEL APPLICATION

The model described above has been used to estimate NAS-ARTS message traffic for the years 1983 and 1987. The ARTS sites analyzed for this application included:

- all ARTS III/IIIA sites, which already have NAS-ARTS communications facilities, including the New York Common IFR Room; and

- all current and projected ARTS II sites, including TPX-42 sites that are to be upgraded to include NAS-ARTS-type communications.

These sites were determined from the ATS Fact Book (Reference 14) and projections made in late 1980 (References 4 and 5).

The input data used and the results obtained for each site are shown in Table A-5. This table is presented on 20 pages, one for each ARTCC. For each site the table presents:

- the city and state (ARTS SITE and ST) -- an asterisk in front of the city name identifies the site as having ARTS III or IIIA,

- the projected annual instrument operations for 1983 and 1987 (IOPS), shown in thousands of operations,

- the fraction of the IFR operations that are expected to involve overflights (FOF), based on 1979 data,

- the fraction of the instrument operations that are expected to involve IFR flights (FIFR), based on 1979 data, and

- the estimates of one-way NAS-ARTS busy-hour message traffic (BUSY-HOUR MSGS) for 1983 and 1987, obtained by applying the model.

The table also presents the following information for each ARTCC:

- the center name and location identifier, at the top of each page,

- the total number of ARTS sites considered for the center, and

- the total one-way NAS-ARTS busy-hour message traffic for 1983 and 1987.

These data for the 20 centers are summarized in Table A-6.

CENTER : ALBUQUERQUE (ZAB)

ARTS SITE	ST	IOPS (1000 S) 1983	IOPS (1000 S) 1987	FOF	FIFR	BUSY-HOUR MSGS 1983	BUSY-HOUR MSGS 1987
*ALBUQUERQUE	NM	286	326	0.03	0.48	444	532
AMARILLO	TX	84	94	0.07	1.00	277	310
*EL PASO	TX	195	217	0.04	0.50	317	371
*PHOENIX	AZ	545	594	0.01	0.65	1135	1299
*TUCSON	AZ	279	296	0.03	0.47	425	473
TOTALS FOR CENTER : 5 SITES						2599	2985

* DESIGNATES ARTS III/IIIA SITES

TABLE A-5: NAS-ARTS/TIDS MESSAGE TRAFFIC PROJECTIONS (PAGE 1 OF 20 PAGES)

CENTER : ATLANTA (ZTL)

ARTS SITE	ST	IOPS (1000 S) 1983	IOPS (1000 S) 1987	FOF	FIFR	BUSY-HOUR MSGS 1983	BUSY-HOUR MSGS 1987
*BIRMINGHAM	AL	268	302	0.11	0.75	677	800
MONTGOMERY	AL	164	185	0.20	0.67	386	435
*ATLANTA	GA	837	913	0.01	0.94	2522	2888
COLUMBUS	GA	159	181	0.41	0.74	453	515
WARNER ROBINS	GA	120	130	0.20	1.00	421	456
ASHVILLE	NC	68	80	0.39	0.91	236	278
*CHARLOTTE	NC	335	387	0.18	0.69	804	975
GREENSBORO	NC	304	343	0.17	0.61	642	724
GREER	SC	115	127	0.17	0.83	330	365
BRISTOL	TN	108	126	0.25	0.72	279	326
CHATTANOOGA	TN	153	176	0.24	0.67	366	422
KNOXVILLE	TN	191	220	0.19	0.67	447	515
TOTALS FOR CENTER : 12 SITES						7563	8700

* DESIGNATES ARTS III/IIIA SITES

TABLE A-5: NAS-ARTS/TIDS MESSAGE TRAFFIC PROJECTIONS (PAGE 2 OF 20 PAGES)

CENTER : BOSTON (ZBW)

ARTS SITE	ST	IOPS (1000 S) 1983	IOPS (1000 S) 1987	FOF	FIFR	BUSY-HOUR MSGS 1983	BUSY-HOUR MSGS 1987
*BOSTON	MA	632	721	0.02	0.73	1486	1780
FALMOUTH	MA	80	84	0.01	1.00	256	269
BANGOR	ME	41	46	0.05	1.00	134	150
PORTLAND	ME	68	76	0.31	1.00	251	280
*WINDSOR LOCKS	CT	273	313	0.14	0.70	652	785
MANCHESTER	NH	38	43	0.03	1.00	123	139
*ALBANY	NY	220	253	0.22	0.66	514	621
ROME	NY	90	98	0.35	1.00	338	368
*SYRACUSE	NY	203	232	0.17	0.63	443	531
*NORTH KINGSTOWN	RI	120	130	0.12	1.00	406	462
BURLINGTON	VT	163	184	0.14	0.57	317	358
TOTALS FOR CENTER : 11 SITES						4921	5744

* DESIGNATES ARTS III/IIIA SITES

TABLE A-5: NAS-ARTS/TIDS MESSAGE TRAFFIC PROJECTIONS (PAGE 3 OF 20 PAGES)

CENTER : CHICAGO (ZAU)

ARTS SITE	ST	IOPS (1000 S) 1983	IOPS (1000 S) 1987	FOF	FIFR	BUSY-HOUR MSGS 1983	BUSY-HOUR MSGS 1987
CEDAR RAPIDS	IA	130	144	0.19	1.00	454	503
WATERLOO	IA	41	47	0.17	1.00	142	163
CHAMPAIGN	IL	76	85	0.26	1.00	274	307
*CHICAGO	IL	1073	1181	0.00	0.97	3319	3836
MOLINE	IL	133	151	0.15	0.64	292	331
PEORIA	IL	74	84	0.18	1.00	257	292
ROCKFORD	IL	185	201	0.17	0.74	474	515
FORT WAYNE	IN	172	199	0.18	0.64	383	443
SOUTH BEND	IN	212	242	0.17	0.68	499	570
GRAND RAPIDS	MI	154	178	0.12	0.58	302	349
KALAMAZOO	MI	73	81	0.25	1.00	262	291
MUSKEGON	MI	38	43	0.14	1.00	130	147
GREEN BAY	WI	151	169	0.06	0.71	352	394
MADISON	WI	179	204	0.13	0.49	298	340
*MILWAUKEE	WI	312	352	0.15	0.71	760	900
TOTALS FOR CENTER : 15 SITES						8199	9381

* DESIGNATES ARTS III/IIIA SITES

TABLE A-5: NAS-ARTS/TIDS MESSAGE TRAFFIC PROJECTIONS (PAGE 4 OF 20 PAGES)

CENTER : CLEVELAND (ZOB)

ARTS SITE	ST	IOPS (1000 S) 1983	IOPS (1000 S) 1987	FOF	FIFR	BUSY-HOUR MSGS 1983	BUSY-HOUR MSGS 1987
*DETROIT	MI	617	683	0.05	0.90	1816	2110
FLINT	MI	77	89	0.27	1.00	279	322
LANSING	MI	174	202	0.25	0.47	294	341
SAGINAW	MI	85	96	0.27	0.72	222	250
*BUFFALO	NY	246	278	0.12	0.80	666	790
*ROCHESTER	NY	237	252	0.17	0.72	591	660
AKRON	OH	204	234	0.16	0.62	436	500
*CLEVELAND	OH	482	541	0.12	0.79	1288	1518
MANSFIELD	OH	53	61	0.34	1.00	198	228
TOLEDO	OH	201	232	0.32	0.72	536	619
YOUNGSTOWN	OH	108	118	0.18	0.69	259	283
ERIE	PA	89	103	0.19	0.77	239	277
*PITTSBURGH	PA	622	705	0.07	0.85	1746	2077
CLARKSBURG	WV	54	61	0.08	1.00	179	202
TOTALS FOR CENTER : 14 SITES						8747	10177

* DESIGNATES ARTS III/IIIA SITES

TABLE A-5: NAS-ARTS/TIDS MESSAGE TRAFFIC PROJECTIONS (PAGE 5 OF 20 PAGES)

CENTER : DENVER (ZDV)

ARTS SITE	ST	IOPS (1000 S) 1983	IOPS (1000 S) 1987	FOF	FIFR	BUSY-HOUR MGSG 1983	BUSY-HOUR MGSG 1987
COLORADO SPRINGS	CO	179	201	0.14	0.47	287	323
*DENVER	CO	698	788	0.01	0.74	1656	1963
PUEBLO	CO	42	46	0.08	1.00	139	153
CASPER	WY	27	30	0.03	1.00	87	97
TOTALS FOR CENTER : 4 SITES						2170	2535

* DESIGNATES ARTS III/IIIA SITES

TABLE A-5: NAS-ARTS/TIDS MESSAGE TRAFFIC PROJECTIONS (PAGE 6 OF 20 PAGES)

CENTER : FORT WORTH (ZFW)

ARTS SITE	ST	IOPS (1000 S) 1983	IOPS (1000 S) 1987	FOF	FIFR	BUSY-HOUR MSGS 1983	BUSY-HOUR MSGS 1987
MONROE	LA	101	115	0.09	0.85	286	326
*SHREVEPORT	LA	185	209	0.09	0.76	469	556
*OKLAHOMA CITY	OK	356	400	0.05	0.63	733	865
*TULSA	OK	244	279	0.07	0.68	548	658
ABILENE	TX	72	76	0.08	1.00	239	252
*DALLAS	TX	818	902	0.01	0.90	2360	2732
LONGVIEW	TX	120	140	0.16	0.78	323	376
LUBBOCK	TX	215	226	0.02	0.94	651	684
MIDLAND	TX	129	149	0.08	1.00	428	494
WACO	TX	32	37	0.21	1.00	113	130
TOTALS FOR CENTER : 10 SITES						6149	7074

* DESIGNATES ARTS III/IIIA SITES

TABLE A-5: NAS-ARTS/TIDS MESSAGE TRAFFIC PROJECTIONS (PAGE 7 OF 20 PAGES)

CENTER : HOUSTON (ZHU)

ARTS SITE	ST	IOPS (1000 S) 1983	IOPS (1000 S) 1987	FOF	FIFR	BUSY-HOUR MSGS 1983	BUSY-HOUR MSGS 1987
MOBILE	AL	170	193	0.18	0.58	343	389
BATON ROUGE	LA	84	95	0.29	1.00	307	347
LAKE CHARLES	LA	63	73	0.34	0.85	200	232
*NEW ORLEANS	LA	391	441	0.03	0.75	949	1124
LAFAYETTE	LA	202	243	0.16	0.78	543	653
GULFPORT	MS	76	87	0.26	0.82	225	257
AUSTIN	TX	184	211	0.09	1.00	613	703
BEAUMONT	TX	111	129	0.24	0.91	361	420
CORPUS CHRISTI	TX	147	167	0.09	0.94	461	523
*HOUSTON	TX	689	768	0.02	0.87	1931	2260
*SAN ANTONIO	TX	403	440	0.05	0.77	1015	1163
TOTALS FOR CENTER : 11 SITES						6948	8073

* DESIGNATES ARTS III/IIIA SITES

TABLE A-5: NAS-ARTS/TIDS MESSAGE TRAFFIC PROJECTIONS (PAGE 8 OF 20 PAGES)

CENTER : INDIANAPOLIS (ZID)

ARTS SITE	ST	IOPS (1000 S) 1983	IOPS (1000 S) 1987	FOF	FIFR	BUSY-HOUR MSGS 1983	BUSY-HOUR MSGS 1987
EVANSVILLE	IN	90	101	0.23	1.00	320	359
*INDIANAPOLIS	IN	412	474	0.15	0.79	1116	1349
TERRA HAUTE	IN	44	52	0.12	1.00	149	176
*COVINGTON	KY	275	311	0.16	0.83	787	934
LEXINGTON	KY	118	137	0.24	0.66	278	323
*LOUISVILLE	KY	270	310	0.16	0.75	698	841
*COLUMBUS	OH	425	485	0.13	0.69	996	1194
*DAYTON	OH	199	224	0.19	0.78	542	641
CHARLESTON	WV	147	169	0.19	0.66	339	390
HUNTINGTON	WV	73	82	0.13	0.67	166	187
TOTALS FOR CENTER : 10 SITES						5392	6394

* DESIGNATES ARTS III/IIIA SITES

TABLE A-5: NAS-ARTS/TIDS MESSAGE TRAFFIC PROJECTIONS (PAGE 9 OF 20 PAGES)

CENTER : JACKSONVILLE (ZJX)

ARTS SITE	ST	IOPS (1000 S) 1983	IOPS (1000 S) 1987	FOF	FIFR	BUSY-HOUR MSGS 1983	BUSY-HOUR MSGS 1987
DAYTONA BEACH	FL	95	107	0.21	1.00	335	377
*JACKSONVILLE	FL	385	426	0.14	0.81	1065	1237
PENSACOLA	FL	251	268	0.09	0.47	393	420
TALAHASSEE	FL	117	137	0.26	0.63	266	311
AUGUSTA	GA	84	100	0.16	0.89	258	307
SAVANNAH	GA	170	193	0.16	0.58	340	386
CHARLESTON	SC	172	193	0.11	0.69	399	448
COLUMBIA	SC	188	217	0.15	0.50	322	372
FLORENCE	SC	14	16	0.17	1.00	48	55
TOTALS FOR CENTER : 9 SITES						3427	3914

* DESIGNATES ARTS III/IIIA SITES

TABLE A-5: NAS-ARTS/TIDS MESSAGE TRAFFIC PROJECTIONS (PAGE 10 OF 20 PAGES)

CENTER : KANSAS CITY (ZKC)

ARTS SITE	ST	IOPS (1000 S) 1983	IOPS (1000 S) 1987	FOF	FIFR	BUSY-HOUR MSGS 1983	BUSY-HOUR MSGS 1987
SPRINGFIELD	IL	150	172	0.21	0.56	296	340
WICHITA	KS	243	274	0.03	0.58	456	514
*KANSAS CITY	MO	409	461	0.05	0.76	1016	1203
*ST. LOUIS	MO	536	602	0.04	0.83	1447	1707
SPRINGFIELD	MO	53	60	0.19	1.00	185	210
TOTALS FOR CENTER : 5 SITES						3401	3974

* DESIGNATES ARTS III/IIIA SITES

TABLE A-5: NAS-ARTS/TIDS MESSAGE TRAFFIC PROJECTIONS (PAGE 11 OF 20 PAGES)

CENTER : LOS ANGELES (ZLA)

ARTS SITE	ST	IOPS (1000 S) 1983	IOPS (1000 S) 1987	FOF	FIFR	BUSY-HOUR MSGS 1983	BUSY-HOUR MSGS 1987
BAKERSFIELD	CA	47	54	0.02	1.00	151	174
*BURBANK	CA	434	499	0.25	0.55	857	1035
*LOS ANGELES	CA	736	800	0.03	0.85	2025	2312
MUROC	CA	146	151	0.52	1.00	588	608
*ONTARIO	CA	452	514	0.17	0.71	1111	1327
PALM SPRINGS	CA	106	116	0.13	1.00	360	394
*SAN DIEGO	CA	427	458	0.02	0.82	1128	1270
*SANTA ANA	CA	142	158	0.00	1.00	453	529
SANTA BARBARA	CA	41	48	0.00	1.00	131	153
*LAS VEGAS	NV	452	509	0.01	0.58	840	994
TOTALS FOR CENTER : 10 SITES						7644	8795

* DESIGNATES ARTS III/IIIA SITES

TABLE A-5: NAS-ARTS/TIDS MESSAGE TRAFFIC PROJECTIONS (PAGE 12 OF 20 PAGES)

CENTER : MEMPHIS (ZME)

ARTS SITE	ST	IOPS (1000 S) 1983	IOPS (1000 S) 1987	FOF	FIFR	BUSY-HOUR MSGS 1983	BUSY-HOUR MSGS 1987
HUNTSVILLE	AL	155	177	0.25	0.68	378	432
FORT SMITH	AR	73	87	0.10	1.00	245	291
LITTLE ROCK	AR	247	280	0.10	0.66	546	619
JACKSON	MS	94	109	0.10	1.00	315	365
MERIDIAN	MS	84	89	0.10	1.00	281	298
*MEMPHIS	TN	454	514	0.04	0.71	1049	1247
*NASHVILLE	TN	288	328	0.08	0.70	669	800
TOTALS FOR CENTER : 7 SITES						3483	4052

* DESIGNATES ARTS III/IIIA SITES

TABLE A-5: NAS-ARTS/TIDS MESSAGE TRAFFIC PROJECTIONS (PAGE 13 OF 20 PAGES)

CENTER : MIAMI (ZMA)

ARTS SITE	ST	IOPS (1000 S) 1983	IOPS (1000 S) 1987	FOF	FIFR	BUSY-HOUR MSGS 1983	BUSY-HOUR MSGS 1987
FT. MYERS	FL	46	51	0.02	1.00	148	164
*MIAMI	FL	804	884	0.00	0.80	2051	2368
*ORLANDO	FL	308	350	0.13	0.66	691	824
*TAMPA	FL	479	541	0.12	0.69	1118	1326
WEST PALM BEACH	FL	317	368	0.17	0.44	483	561
TOTALS FOR CENTER : 5 SITES						4491	5243

* DESIGNATES ARTS III/IIIA SITES

TABLE A-5: NAS-ARTS/TIDS MESSAGE TRAFFIC PROJECTIONS (PAGE 14 OF 20 PAGES)

CENTER : MINNEAPOLIS (ZMP)

ARTS SITE	ST	IOPS (1000 S) 1983	IOPS (1000 S) 1987	FOF	FIFR	BUSY-HOUR MSGS 1983	BUSY-HOUR MSGS 1987
*DES MOINES	IA	201	229	0.11	0.63	426	510
SIOUX CITY	IA	44	49	0.08	1.00	146	163
DULUTH	MN	50	54	0.08	1.00	166	179
*MINNEAPOLIS	MN	426	482	0.01	0.79	1079	1282
ROCHESTER	MN	45	50	0.09	1.00	150	167
LINCOLN	NE	178	196	0.08	0.87	514	566
*OMAHA	NE	99	111	0.00	1.00	316	372
BISMARK	ND	22	24	0.04	1.00	72	78
FARGO	ND	86	94	0.09	1.00	287	313
SIOUX FALLS	SD	102	111	0.07	1.00	337	366
TOTALS FOR CENTER : 10 SITES						3491	3995

* DESIGNATES ARTS III/IIIA SITES

TABLE A-5: NAS-ARTS/TIDS MESSAGE TRAFFIC PROJECTIONS (PAGE 15 OF 20 PAGES)

CENTER : NEW YORK (ZNY)

ARTS SITE	ST	IOPS (1000 S) 1983	IOPS (1000 S) 1987	FOF	FIFR	BUSY-HOUR MSGS 1983	BUSY-HOUR MSGS 1987
ATLANTIC CITY	NJ	141	155	0.09	0.59	277	305
BINGHAMTON	NY	60	71	0.18	1.00	209	247
ELMIRA	NY	53	59	0.14	1.00	181	201
*NEW YORK	NY	1344	1506	0.07	0.86	3816	4490
WHITE PLAINS	NY	173	195	0.06	0.88	500	564
ALLENTOWN	PA	126	140	0.11	0.59	250	278
HARRISBURG	PA	137	150	0.12	1.00	463	507
*PHILADELPHIA	PA	633	720	0.05	0.73	1511	1804
READING	PA	29	34	0.17	1.00	100	118
SCRANTON	PA	81	90	0.22	1.00	287	319
TOTALS FOR CENTER : 10 SITES						7595	8833

* DESIGNATES ARTS III/IIIA SITES

TABLE A-5: NAS-ARTS/TIDS MESSAGE TRAFFIC PROJECTIONS (PAGE 16 OF 20 PAGES)

CENTER : OAKLAND (ZOA)

ARTS SITE	ST	IOPS (1000 S) 1983	IOPS (1000 S) 1987	FOF	FIFR	BUSY-HOUR MSGS 1983	BUSY-HOUR MSGS 1987
FRESNO	CA	113	126	0.04	1.00	368	410
MONTEREY	CA	133	146	0.02	1.00	428	470
*OAKLAND	CA	818	887	0.05	0.88	2354	2680
*SACRAMENTO	CA	546	599	0.06	0.63	1130	1302
STOCKTON	CA	43	48	0.06	1.00	141	158
RENO	NV	70	77	0.03	1.00	227	249
TOTALS FOR CENTER : 6 SITES						4648	5269

* DESIGNATES ARTS III/IIIA SITES

TABLE A-5: NAS-ARTS/TIDS MESSAGE TRAFFIC PROJECTIONS (PAGE 17 OF 20 PAGES)

CENTER : SALT LAKE CITY (ZLC)

ARTS SITE	ST	IOPS (1000 S) 1983	IOPS (1000 S) 1987	FOF	FIFR	BUSY-HOUR MSGS 1983	BUSY-HOUR MSGS 1987
BOISE	ID	232	255	0.02	0.52	389	427
BILLINGS	MT	130	142	0.00	1.00	415	453
GREAT FALLS	MT	120	130	0.00	1.00	383	415
*SALT LAKE CITY	UT	303	343	0.13	0.54	556	661
TOTALS FOR CENTER : 4 SITES						1742	1955

* DESIGNATES ARTS III/IIIA SITES

TABLE A-5: NAS-ARTS/TIDS MESSAGE TRAFFIC PROJECTIONS (PAGE 18 OF 20 PAGES)

CENTER : SEATTLE (ZSE)

ARTS SITE	ST	IOPS (1000 S) 1983	IOPS (1000 S) 1987	FOF	FIFR	BUSY-HOUR MSGS 1983	BUSY-HOUR MSGS 1987
EUGENE	OR	56	64	0.00	1.00	179	204
*PORTLAND	OR	400	454	0.04	0.62	807	962
*SEATTLE	WA	420	474	0.03	0.76	1033	1225
SPOKANE	WA	164	178	0.04	0.72	384	417
TOTALS FOR CENTER : 4 SITES						2403	2807

* DESIGNATES ARTS III/IIIA SITES

TABLE A-5: NAS-ARTS/TIDS MESSAGE TRAFFIC PROJECTIONS (PAGE 19 OF 20 PAGES)

CENTER : WASHINGTON (ZDC)

ARTS SITE	ST	IOPS (1000 S) 1983	IOPS (1000 S) 1987	FOF	FIFR	BUSY-HOUR MSGS 1983	BUSY-HOUR MSGS 1987
*WASHINGTON	DC	555	602	0.05	0.73	1325	1509
*BALTIMORE	MD	451	519	0.29	0.63	1038	1255
*CHANTILLY	VA	305	357	0.26	0.76	836	1027
*NORFOLK	VA	359	392	0.06	0.71	837	960
RICHMOND	VA	200	228	0.12	0.66	446	509
ROANOKE	VA	126	142	0.17	0.69	301	339
FAYETTEVILLE	NC	153	170	0.17	0.76	403	447
*RALEIGH	NC	234	270	0.13	0.61	485	588
WILMINGTON	NC	87	99	0.24	0.90	280	318
TOTALS FOR CENTER : 9 SITES						5951	6953

* DESIGNATES ARTS III/IIIA SITES

TABLE A-5: NAS-ARTS/TIDS MESSAGE TRAFFIC PROJECTIONS (PAGE 20 OF 20 PAGES)

CENTER	SITES	BUSY-HOUR MSGS 1983	BUSY-HOUR MSGS 1987
ALBUQUERQUE	5	2599	2985
ATLANTA	12	7563	8700
BOSTON	11	4921	5744
CHICAGO	15	8199	9381
CLEVELAND	14	8747	10177
DENVER	4	2170	2535
FORT WORTH	10	6149	7074
HOUSTON	11	6948	8073
INDIANAPOLIS	10	5392	6394
JACKSONVILLE	9	3427	3914
KANSAS CITY	5	3401	3974
LOS ANGELES	10	7644	8795
MEMPHIS	7	3483	4052
MIAMI	5	4491	5243
MINNEAPOLIS	10	3491	3995
NEW YORK	10	7595	8833
OAKLAND	6	4648	5269
SALT LAKE CITY	4	1742	1955
SEATTLE	4	2403	2807
WASHINGTON	9	5951	6953
TOTALS : 20 CENTERS	171	100964	116853

TABLE A-6: NAS-ARTS MESSAGE TRAFFIC AT CENTERS

APPENDIX B

MULTIPLEXING TRAFFIC FROM SEVERAL ARTS SITES

APPENDIX B

MULTIPLEXING TRAFFIC FROM SEVERAL ARTS SITES

B.1 PURPOSE AND SCOPE

This study recommends the application of multiplexing to make more efficient use of NAS-ARTS communications facilities. One approach to multiplexing that originally appeared attractive was subsequently rejected due to cost and availability considerations. This approach involved the multiplexing/concentration of traffic from several ARTS sites onto a single trunk to their common ARTCC.

This appendix presents a limited analysis of this approach. Specifically it considers the cost and availability associated with the implementation of this approach as a variation of Alternative 2. This variation is referred to as Alternative 2A, The Current Approach with Multiplexing for Dispersed ARTS Facilities. Results obtained are compared with those for Alternative 2, described in the main body of the report and referred to here as Alternative 2B, The Current Approach with Multiplexing for Collocated Facilities.

B.2 ALTERNATIVE 2A

Figure B-1 illustrates the application of Alternative 2A for the same site layout used to illustrate the other alternatives. In this illustration, a single pair of multiplexors is used to allow NAS-ARTS traffic from three facilities, plus one FDIO multipoint line, to share a single trunk to the ARTCC. If TDMs are used, 9600 b/s modems and, most probably, line conditioning would be required for the trunk.

The similar illustration for Alternative 2B is reproduced as Figure B-2. The following differences between the two examples should be noted:

- Alternative 2A requires fewer multiplexors.
- Alternative 2B requires fewer (but generally higher speed) modems (and telephone company drops).

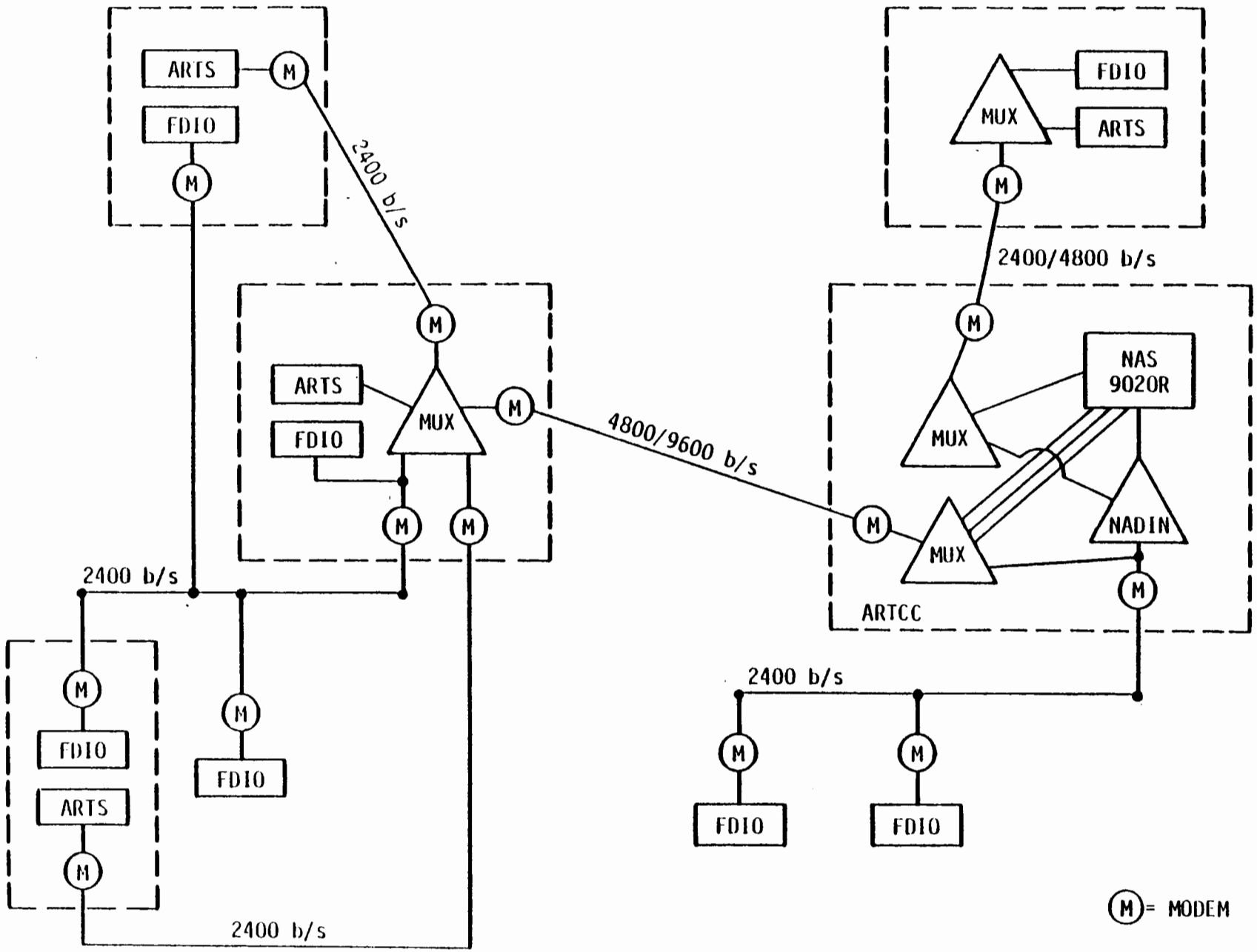

FIGURE B-1: ALTERNATIVE 2A, THE CURRENT APPROACH WITH MULPLEXING FOR DISPERSED ARTS FACILITIES

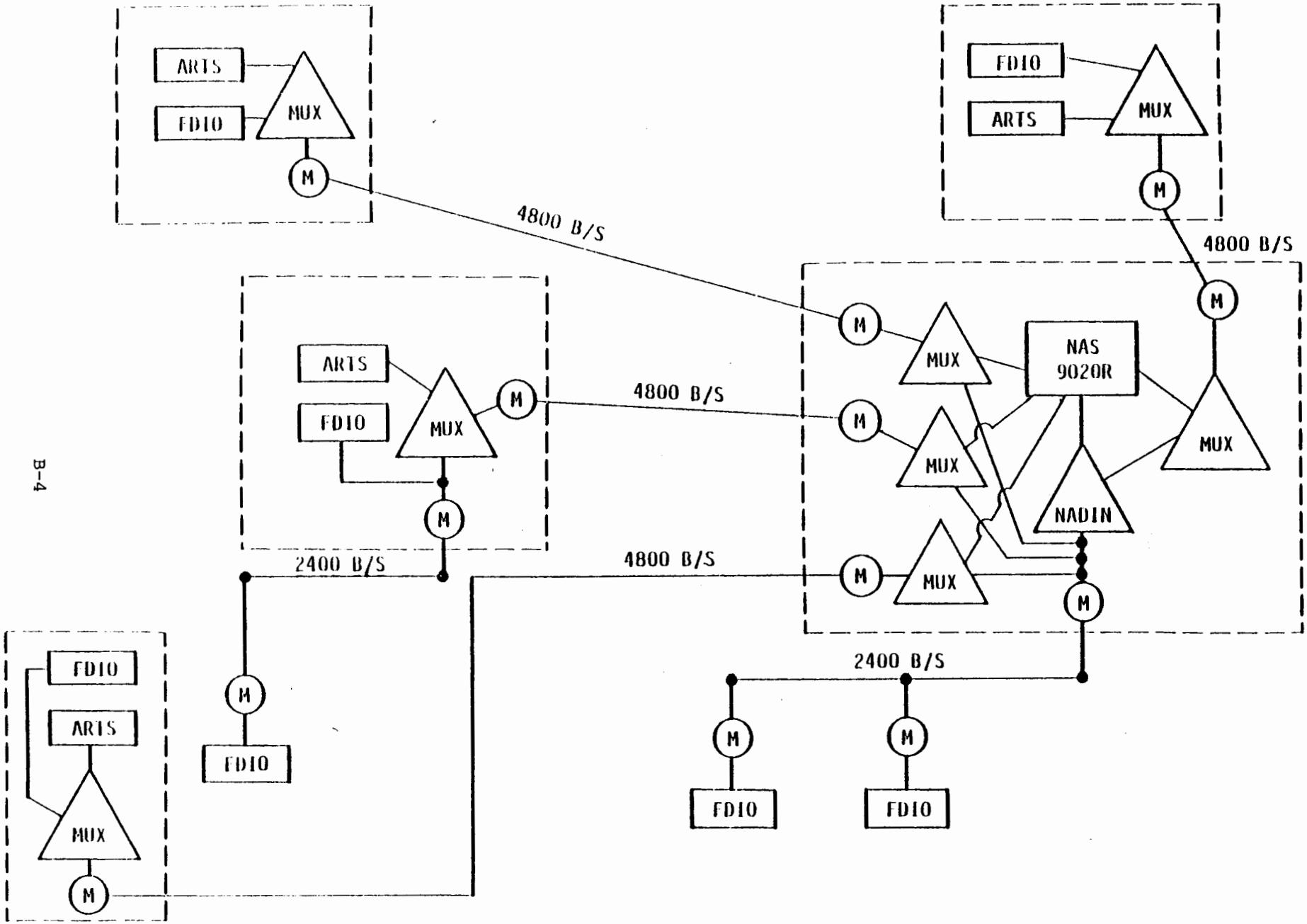

FIGURE B-2. ALTERNATIVE 2B, THE CURRENT APPROACH WITH MULTIPLEXING FOR COLLOCATED FACILITIES

- Alternative 2A requires fewer miles of NAS-ARTS lines.

- Alternative 2B requires fewer miles of FDIO lines.

- Under Alternative 2A, the outage of a single trunk could disrupt communications for three ARTS facilities and four FDIO facilities; under Alternative 2B, only one ARTS facility and two (or more) FDIO facilities would be so affected.

B.3 COST COMPARISON

Comparative costs for Alternatives 2A and 2B were determined considering ARTS and FDIO facilities associated with five ARTCCs. These five included one of the busiest (Chicago) relative to NAS-ARTS traffic and one of the least busy (Salt Lake City). The results are shown in Table B-1.

The following comparisons from Table B-1 are of particular interest:

1. Alternative 2B consistently has the lower recurring costs (Total RC). This implies that the savings in FDIO line costs with Alternative 2B are greater than the savings in NAS-ARTS line costs with Alternative 2A.

2. The one-time costs (Total OC) for Alternative 2B is from 2 to 3 times that for Alternative 2A.

3. When one-time costs are converted to equivalent monthly costs (EMC) the differences for the two alternatives is small compared to the differences in recurring costs.

4. For the five centers considered, the life cycle costs (Total EMC) for Alternative 2B is about 7 percent less than for Alternative 2A.

Two aspects of the data in Table B-1 may at first appear contrary to expectations. Specifically, why is there so great a difference in line (recurring) costs in favor of Alternative 2B? Further, since Alternative 2A involves the use of more modems, why is the modems cost component for Alternative 2B greater?

ALTERNATIVE	COST COMPONENT	CENTER				
		CHICAGO	CLEVELAND	FORT WORTH	LOS ANGELES	SALT LAKE CITY
2A	IXC	$6,852	$7,346	$6,257	$5,347	$2,639
	Termination	1,875	2,019	1,550	1,766	649
	Total RC	$8,727	$9,365	$7,807	$7,113	$3,288
	Multiplexors	8,000	8,000	6,000	6,000	2,000
	Modems	20,000	20,000	15,000	15,000	5,000
	Installation	4,059	4,371	3,356	3,824	1,405
	Total OC	32,059	32,371	24,256	24,824	8,405
	EMC	641	647	487	496	168
	Total EMC	$9,368	$10,012	$8,294	$7,609	$3,456
2B	IXC	$5,833	$6,239	$5,622	$4,047	$2,189
	Termination	1,190	1,514	1,406	1,766	649
	Total RC	$7,023	$7,753	$7,028	$5,813	$2,838
	Multiplexors	30,000	28,000	20,000	20,000	8,000
	Modems	45,000	42,000	30,000	30,000	12,000
	Installation	2,576	3,278	3,044	3,824	1,405
	Total OC	77,576	73,278	53,044	53,824	21,405
	EMC	1,552	1,466	1,061	1,076	428
	Total EMC	$8,575	$9,219	$8,089	$6,889	$3,266

TABLE B-1. SELECTED COST COMPARISONS FOR ALTERNATIVE 2 VARIATIONS

The second question is the easier to answer. The cost analysis assumed that 2400 b/s modems currently used for FDIO and NAS-ARTS communications would be available at no cost penalty for all alternatives. Since most of the modems required for Alternative 2B are 4800 b/s modems, the absolute number of modems required is not directly indicative of the modems cost component.

The answer to the first question lies in the structure of the MPL tarriffs (see Table 3 of the main body). For each link, whether a point-to-point link or one link in a multipoint line, the per mile charge for the first few miles is much greater than that for the last few miles. Thus the elimination of an entire multipoint link will save more dollars than the reduction of a point-to-point link by the same number of miles. This fact, combined with the elimination of separate drops for collocated facilities under Alternative 2B, results in the differences in Total RC noted.

Although only five of the 20 CONUS ARTCCs were analyzed, the results obtained are felt to be representative for all ARTCCs. Thus, considering cost alone, Alternative 2B would be preferred to Alternative 2A.

B.4 AVAILABILITY ANALYSIS

Analysis included in the main body of this report determined for each alternative the probability that a random NAS-ARTS link was available (not down). This was designated P_i, where i indicated the alternative. In particular it was found that:

$$P_1 = .99897$$

and $P_2 = .99885 = P_{2B}$.

Thus the availability of a NAS-ARTS link under Alternative 2B would be only slightly less than under the current approach (Alternative 1).

Under Alternative 2A, the nature of the NAS-ARTS "link" differs depending on the location of the ARTS facility. If the ARTS facility is collocated with the multiplexor, the link is essentially the same as for Alternative 2B. It will include the line, two modems, and two multiplexors. Thus:

$$P_{2A} = .99901 \times .99998^2 \times .99994^2 = .99885.$$

If, however, the ARTS facility is not collocated with the multiplexor, the "link" to the ARTCC includes two lines, four modems, and two multiplexors. Thus:

$$P_{2A} = .99901^2 \times .99998^4 \times .99994^2 = .99782.$$

This is significantly less than P_1 and P_{2B}. It should also be obvious that, under Alternative 2A, it is more likely that two or more NAS-ARTS "links" are not available simultaneously.

The availability for Alternative 2A could be increased by providing redundant or back-up facilities. Since it was found that Alternative 2A already cost more than Alternative 2B, such an added expense could not be justified.

B.5 CONCLUSIONS

Alternative 2A was originally considered a viable alternative because it involved the use of fewer multiplexors than Alternative 2B. Thus it was included in the analysis despite the fact that it was known to have lower availability. The cost analysis revealed, however, that the reduced numbers of multiplexors did not result in reduced cost. Further, the availability analysis confirmed that availability was significantly lower than that for the current approach. Thus there remains no justification for seriously considering Alternative 2A.

APPENDIX C

LIST OF REFERENCES

APPENDIX C

LIST OF REFERENCES

1. Flight Data Input/Output (FDIO) System, FAA Preliminary Specification, May 9, 1980.

2. Communications Support for Flight Data Entry and Printout Terminals, FAA-RD-80-96, Federal Aviation Administration, U.S. DOT, August 1980.

3. ARTS II Enhancement, Design Alternatives, FAA-RD-81-7, Federal Aviation Administration, U.S. DOT, December 1980.

4. Information Letter (AAT-120) From: Chief, ATC Systems Programs Division, AAT-100, To: All Regional Air Traffic Division Chiefs, Subject: Priority Listing for Utilization of Adapter Space in ARTCC 9020 Peripheral Adapter Modules (PAM), November 25, 1980.

5. NAS Change Proposal, NCP #6297, Installation of PAM Adapters for Terminal Automation Facilities, August 5, 1980.

6. Glynn, H. J. and Hagerott, R. E., Interface Processor, Interface Requirements Document, FA079-WP-80-2, Transportation Systems Center, U.S. DOT, March 1980.

7. Riviere, C. J., NAS-9020 Interface to NADIN Analysis, WM-338-41, Telcom, Inc., November 26, 1974.

8. Interface Control Document (ICD), NAS EnRoute Stage A-ARTS III, NAS-MD-601, Federal Aviation Administration, U.S. DOT, May 1979.

9. ARTS III Computer Program Functional Specification (CPFS), Interfacility Data Transfer, NAS-MD-610, Federal Aviation Administration, U.S. DOT, May 1979.

10. National Airspace Data Interchange Network (NADIN), Specification FAA-E-2661, Federal Aviation Administration, U.S. DOT, February 23, 1979.

11. Technical Data Package for the National Airspace Data Interchange Network (NADIN) Level 1A, ARD-220-1A, Systems Research and Development Service, FAA, December 1980.

12. National Airspace System Plan, Facilities, Equipment and Associated Development, Federal Aviation Administration, U.S. DOT, December 1981.

13. Policy for Use of Telecommunications Data Transfer Standards, Order 1830.2, Federal Aviation Administration, U.S. DOT, February 27, 1978.

14. ATS Fact Book, Federal Aviation Administration, U.S. DOT, March 31, 1981.

15. Terminal Area Forecasts, Fiscal Years 1980-1991, FAA-AVP-79-12, Federal Aviation Administration, U.S. DOT, November 1979.

16. McGregor, P. V., Automated Flow Control Interim Communications, FAA-RD-76, Federal Aviation Administration, U.S. DOT, August 1976.

17. Terminal Area Air Traffic Relationships (Peak Day/Busy Hour), Fiscal Year 1979, Federal Aviation Administration, U.S. DOT, undated.

18. MIND II Users' Guide, Contel Information Systems, January 1981.