COPY 1

DOT/FAA/PM-86/18

Program Engineering
and Maintenance Service
Washington, D.C. 20591

PM
86
18

Siting Criteria for Microwave Landing Systems (MLS)

Roger Radcliff
Michael F. DiBenedetto

Avionics Engineering Center
Department of Electrical and
Computer Engineering
Ohio University
Athens, Ohio 45701

SEP 23 1986

June 1986
Final Report

TECHNICAL CENTER LIBRARY

This document is available to the public through the National Technical Information Service, Springfield, Virginia 22161

U.S. Department of Transportation
Federal Aviation Administration

NOTICE

This document is disseminated under the sponsorship of the Department of Transportation in the interest of information exchange. The United States Government assumes no liability for the contents or use thereof.

Technical Report Documentation Page

1. Report No.	2. Government Accession No.	3. Recipient's Catalog No.
DOT/FAA/PM-86/18		

4. Title and Subtitle	5. Report Date
Siting Criteria for Microwave Landing Systems (MLS)	June 1986
	6. Performing Organization Code
7. Author(s) Roger Radcliff and Michael F. DiBenedetto	8. Performing Organization Report No. OU-AEC-81-1
9. Performing Organization Name and Address Avionics Engineering Center, Department of Electrical & Computer Engineering, Ohio University, Athens, Ohio 45701	10. Work Unit No. (TRAIS)
	11. Contract or Grant No. DTRS57-83-C-00097
12. Sponsoring Agency Name and Address U.S. Department of Transportation, Federal Aviation Administration, Program Engineering and Maintenance Service, Washington, D. C. 20591	13. Type of Report and Period Covered FINAL REPORT
	14. Sponsoring Agency Code

15. Supplementary Notes
U.S. Department of Transportation
Transportation System Center
Kendall Square, Cambridge, Massachusetts 02142

16. Abstract

This report describes current siting criteria for the Microwave Landing Systems (MLS). These criteria have been obtained through flight testing, mathematical and computer modeling, and publications from other sources.

The first three chapters provide a description of MLS principles and a technical description of each of the system components. Chapter Four introduces the reader to general principles germane to siting, such as critical areas and propagation effects. Chapter Five describes the criteria for siting the MLS in an ideal airport environment. The final chapter gives solutions to difficult siting problems such as MLS/ILS collocation, multipath and shadowing effects, and collocation with approach lighting systems.

17. Key Words	18. Distribution Statement
Siting Microwave Landing System MLS/ILS Collocation	Document is available to the public through the National Technical Information Service Springfield, Virginia 22161.

19. Security Classif. (of this report)	20. Security Classif. (of this page)	21. No. of Pages	22. Price
Unclassified	Unclassified	74	

Form DOT F 1700.7 (8-72) Reproduction of completed page authorized

English/Metric Conversion Factors

Length

From \ To	Cm	m	Km	in	ft	s mi	nmi
Cm	1	0.01	1×10^{-5}	0.3937	0.0328	6.21×10^{-6}	5.39×10^{-6}
m	100	1	0.001	39.37	3.281	0.0006	0.0005
Km	100,000	1000	1	39370	3281	0.6214	0.5395
in	2.540	0.0254	2.54×10^{-5}	1	0.0833	1.58×10^{-5}	1.37×10^{-5}
ft	30.48	0.3048	3.05×10^{-4}	12	1	1.89×10^{-4}	1.64×10^{-4}
S mi	160,900	1609	1.609	63360	5280	1	0.8688
nmi	185,200	1852	1.852	72930	6076	1.151	1

Area

From \ To	Cm^2	m^2	Km^2	in^2	ft^2	S mi^2	nmi^2
Cm^2	1	0.0001	1×10^{-10}	0.1550	0.0011	3.86×10^{-11}	5.11×10^{-11}
m^2	10,000	1	1×10^{-6}	1550	10.76	3.86×10^{-7}	5.11×10^{-7}
Km^2	1×10^{10}	1×10^{6}	1	1.55×10^{9}	1.08×10^{7}	0.3861	0.2914
in^2	6.452	0.0006	6.45×10^{-10}	1	0.0069	2.49×10^{-10}	1.88×10^{-10}
ft^2	929.0	0.0929	9.29×10^{-8}	144	1	3.59×10^{-8}	2.71×10^{-8}
S mi^2	2.59×10^{10}	2.59×10^{6}	2.590	4.01×10^{9}	2.79×10^{7}	1	0.7548
nmi^2	3.43×10^{10}	3.43×10^{6}	3.432	5.31×10^{9}	3.70×10^{7}	1.325	1

Volume

From \ To	Cm^3	Liter	m^3	in^3	ft^3	yd^3	fl oz	fl pt	fl qt	gal
Cm^3	1	0.001	1×10^{-6}	0.0610	3.53×10^{-5}	1.31×10^{-6}	0.0338	0.0021	0.0010	0.0002
liter	1000	1	0.001	61.02	0.0353	0.0013	33.81	2.113	1.057	0.2642
m^2	1×10^{6}	1000	1	61,000	35.31	1.308	33,800	2113	1057	264.2
in^3	16.39	0.0163	1.64×10^{-5}	1	0.0006	2.14×10^{-5}	0.5541	0.0346	2113	0.0043
ft^3	28,300	28.32	0.0283	1728	1	0.0370	957.5	59.84	0.0173	7.481
yd^3	765,000	764.5	0.7646	46700	27	1	25900	1616	807.9	202.0
fl oz	29.57	0.2957	2.96×10^{-5}	1.805	0.0010	3.87×10^{-5}	1	0.0625	0.0312	0.0078
fl pt	473.2	0.4732	0.0005	28.88	0.0167	0.0006	16	1	0.5000	0.1250
fl qt	946.3	0.9463	0.0009	57.75	0.0334	0.0012	32	2	1	0.2500
gal	3785	3.785	0.0038	231.0	0.1337	0.0050	128	8	4	1

Mass

From \ To	g	Kg	oz	lb	ton
g	1	0.001	0.0353	0.0022	1.10×10^{-6}
Kg	1000	1	35.27	2.205	0.0011
oz	28.35	0.0283	1	0.0625	3.12×10^{-5}
lb	453.6	0.4536	16	1	0.0005
ton	907,000	907.2	32,000	2000	1

Temperature

$$^{o}C = 5/9\,(^{o}F - 32)$$

$$^{o}F = 9/5\,(^{o}C) + 32$$

TABLE OF CONTENTS

		Page No.
CHAPTER 1	INTRODUCTION	1
	1. Purpose and Scope	1
	2. Background	1
	3. Rationale for the Development of MLS	1
CHAPTER 2	DESCRIPTION OF MLS	3
	1. Ground System Layout	3
	a. Approach Azimuth Station	3
	b. Approach Elevation Station	3
	c. Remote Control and Status Unit	8
	d. Remote Status Unit	8
	2. Signal Format	10
	a. Guidance Function Formats	10
	b. Data Formats	10
	c. Morse Code Identification	10
	3. Data Transmission	10
	4. Angular Measurement Concept	14
	a. Azimuth	14
	b. Elevation	14
	5. Function Coverage Requirements	14
	a. Approach Azimuth	14
	b. Back Azimuth	22
	c. Approach Elevation	24
	d. Data Coverage	26
	e. DME/P	26
	6. MLS Expansion Capabilities	26
	a. Dual Mode Azimuth Antennas	26
	b. Auxiliary Data	26
	c. 360 Degree Azimuth	26
	d. Limited-Scan Azimuth Coverage	26
CHAPTER 3	INSTALLATION REQUIREMENTS	28
	1. MLS Power Requirements	28
	2. Equipment and Structure Requirements	28
	3. Site Preparation	28
	4. Interconnect Requirements	29

a. Power 29
b. Communications 29

CHAPTER 4 GENERAL DISCUSSION OF CONSIDERATIONS THAT AFFECT SITING 30

1. Preparation of Data 30
2. Air Traffic Planning Input 30
3. Critical Areas 31
4. Propagation Effects 31

a. Multipath 31
b. Shadowing 34

5. OCI Requirement 34

CHAPTER 5 SITING UNDER IDEAL CONDITIONS 39

1. Overview 39
2. Azimuth Site 39

a. Antenna Location 39
b. Critical Area 41
c. DME/P 41
d. Obstacle Clearance 41

3. Elevation Site 46

a. Antenna Location 46
b. Critical Area 48
c. Obstacle Clearance 48

CHAPTER 6 SPECIFIC SITING CONCERNS 58

1. Overview 58
2. Azimuth Station 58

a. Multipath 58
b. Shadowing 60
c. Collocation with ILS Localizer 63
d. Coexistence with Approach Light System and Other Objects in the Near-Field of the Azimuth Antenna 66

3. Elevation Station 68

a. Multipath 68
b. Shadowing 68
c. Collocation with ILS Glide Slope 68

4. Discussion of Computer Modeling to Aid in Siting 70

REFERENCES 74

LIST OF FIGURES AND TABLES

Figure		Page No.
1	Standard MLS Ground System Configuration.	4
2	1° Azimuth Equipment (Front View).	5
3	1° Beamwidth, ±40° Scan Azimuth Equipment (external).	6
4	Approach Elevation Equipment.	7
5	Format for the Angle Guidance Functions.	11
6a	Basic Data Organization.	12
6b	Auxiliary Data Word Organization.	12
7	Morse Code Technique.	13
8	Azimuth Antenna Scanning Beam.	16
9	Azimuth Scanning Convention.	17
10	Illustration of Azimuth Scanning Concept.	18
11	Elevation Antenna Scanning Beam.	19
12	Elevation Scanning Convention.	20
13	Approach Azimuth/Data Coverage.	21
14	Back Azimuth/Data Coverage.	23
15	Approach Elevation Coverage.	25
16	DME/P Coverage.	27
17	Azimuth Multipath Configurations.	32
18	Azimuth Multipath in the Nonscan Direction.	33
19	Elevation Multipath in the Scan Direction.	35
20	Elevation Multipath in the Nonscan Direction.	36
21	Shadowing and Diffraction Regions.	37
22	Typical Scenario Requiring OCI.	38
23	Preferred and Alternate Locations for Approach Azimuth Station.	40

LIST OF FIGURES AND TABLES (continued)

Figure		Page No.
24	Azimuth System Critical Area.	42
25	Azimuth System Critical Areas Suggested by AWOP -10 Meeting.	43
26	Relationship Between DME/P Antenna Phase Center Height and Distance to Touchdown.	44
27	Azimuth Station Intersection with Part 77 Surfaces.	45
28	MLS 3-Degree Glide Paths and the Linear Asymptote for Various Antenna Offsets from Runway Centerline.	47
29	Computation of Elevation Site Coordinates.	49
30	Elevation Siting Area Which Yields a Planar Glide Path of at Least 50 Feet While Keeping the Hyperbolic Path Crossing Height Less than 60 Feet.	50
31	Elevation Site Critical Area for a 1 Degree Beamwidth Antenna (plan view).	51
32	Elevation Site Critical Area for a 1 Degree Beamwidth Antenna (elevation view).	52
33	Elevation Site Critical Area for a 1.5 Degree Beamwidth Antenna (plan view).	53
34	Elevation Site Critical Area for a 1.5 Degree Beamwidth Antenna (elevation view).	54
35	Elevation System Critical Areas Suggested by AWOP -10 Meeting.	55
36	Transitional Surfaces.	56
37	Ray Tracing to Determine Multipath Region (plan view).	57
38	Ray Tracing to Determine Multipath Region (Elevation View of Insert).	59
39	Contour Map of Peak CMN Induced by a 500' X 60' Building.	61
40	Contour Map of Peak CMN Induced by a 1000' X 100' Building.	62

LIST OF FIGURES AND TABLES (continued)

Figure		Page No.
41	Azimuth Signal Diffraction by a Humped Runway.	64
42	Azimuth Antenna Clearance Above ILS Localizer.	67
43	Elevation Beamwidth Criterion for Front Course Terrain (from [1]).	69
44	MLS Elevation Mock-up Positions.	72

Table		Page No.
1	System Configurations.	9
2	Value of Angle Guidance Parameters.	15
3	Summary of Localizer Flight Measurements.	65
4	Structure-Sideband Reference Glide Slope.	71

CHAPTER 1 INTRODUCTION

1. PURPOSE AND SCOPE. The intent of this document is to present to the reader the siting criteria established for the Microwave Landing Systems (MLS). Use of the MLS computer model, data gathered from signal measurements and testing, and insight gained from past work with the Instrument Landing System (ILS) have contributed significantly to the development of this document.

Incorporated in Chapter 1 is a brief presentation of the background of the MLS along with the rationale for its development. Chapter 2 begins with a general discussion of MLS and its theory of operation, as well as its growth potential and operational capabilities. Chapter 3 is devoted to MLS power and site preparation requirements. Chapter 4 introduces a general discussion on topics germane to siting, such as critical areas, multipath, and shadowing. Chapter 5 discusses basic siting criteria, and finally, Chapter 6 is concerned with specific criteria developed from the analysis of propagation anomalies (multipath, shadowing, etc.), and a discussion of computer modeling to aid in siting.

2. BACKGROUND. The concepts of the Microwave Landing System date back to the early 1950's. From this time it has seen various improvements, electronic scanning and solid state digital electronics to name two, which have contributed to the development of the present day MLS.

MLS is designed to be an all-weather precision approach and landing system capable of meeting accuracies equivalent to ICAO category III standards [1]. MLS operates with an internationally standardized signal format. Thus, any aircraft equipped with a standard MLS receiver can make a guided approach to any MLS-equipped runway. MLS also offers a large volume of guidance coverage, which allows for segmented as well as curved approaches. This is desirable for noise abatement or other special conditions. MLS also provides a continuous ground-to-air data link to the aircraft. Its modular design makes it flexible and capable of meeting the needs of individual installations.

3. RATIONALE FOR THE DEVELOPMENT OF MLS. MLS overcomes the single approach-path limitations of ILS, and can provide improved approach guidance, meeting requirements predicted for the foreseeable future. It is estimated that a minimum of 100 channels will be needed if the predicted channel congestion is to be avoided [2]; MLS can provide 200 channels [3].

The MLS format can provide proportional guidance over a maximum service volume of ±62 degrees in azimuth and up to +30 degrees in elevation, permitting segmented and curved approaches, and a selectable glide angle [4]. (Typically proportional guidance will be ±40 degrees in azimuth and +15 degrees in elevation.) This capability allows the selection of approach profiles that best fit the performance capabilities of the aircraft, maximizes the number of approach aircraft by making possible a more efficient use of approach airspace, and enhances noise abatement by allowing specialized approach paths which avoid nearby communities.

Employing microwave frequencies allows MLS antennas to be "electronically" large while remaining relatively small physically. These large aperture antennas, very directive in nature, establish a narrow beam in space. This characteristic can be used by the siting engineer to minimize the amount of reflected RF energy from hangars, airport buildings, and aircraft on the ground.

Digital signal processing may be incorporated in the MLS receiver to reduce the effects of multipath, along with the capability to receive data. Such information as azimuth angle offset, runway heading, precision distance-measuring equipment (DME/P) offset, and elevation antenna height can be transmitted to the aircraft continuously via data link.

Unlike ILS, MLS antennas do not rely upon a large ground plane to establish the signal in space, and thus MLS is less vulnerable to terrain effects. This fact, plus the small physical size of the MLS antennas, allows more flexibility and reduced costs in siting.

Through the use of digital design and microwave RF frequencies, MLS can provide the following:

- 200 channels
- increased operational capabilities
- high reliability
- excellent signal quality and guidance
- the flexibility to meet difficult siting requirements

CHAPTER 2 DESCRIPTION OF MLS

1. GROUND SYSTEM LAYOUT. The FAA standard MLS ground system configuration consists of the following (see Figure 1) [5]:

- approach azimuth station
- approach elevation station

a. Approach Azimuth Station. The approach azimuth station (AZ) is normally located at the stop end of the runway. Figures 2 and 3 show the structure of typical approach azimuth equipment; the exact design of the equipment to be installed may not look exactly like this. This station provides lateral guidance, range information, and data transmission to aircraft on approach and is composed of [5]:

- approach azimuth equipment [4]
  - data transmission equipment (basic and auxiliary)
  - azimuth equipment electronics
  - azimuth executive monitor
  - one set of cables, waveguides, connectors, and fittings
  - one of the following azimuth antenna options
    1) 2-degree beamwidth, ±40 degrees proportional lateral coverage.
    2) 1-degree beamwidth, ±40 degrees proportional lateral coverage.
    3) 1-degree beamwidth, with at least ±10 degrees proportional lateral coverage with low side lobes.
    4) 1-degree beamwidth, ±60 degrees proportional lateral coverage
    5) 3-degree beamwidth, ±40 degrees proportional lateral coverage
- DME/P equipment [6]
  - DME/P transponder
  - DME/P executive monitor
  - one set of cables, waveguides, connectors, and fittings
- equipment maintenance monitor
- station power

b. Approach Elevation Station. The approach elevation station may be located on either side of the runway centerline (see Figure 4). The function of this station is to provide vertical guidance to the aircraft on approach. This station is composed of [5]:

- elevation equipment [4]
  - elevation equipment electronics
  - elevation executive monitor
  - one set of cables, waveguides, connectors, and fittings
  - one of the following elevation antenna options
    1) 1.5 degree beamwidth, +0.9 to +15 degrees vertical proportional coverage
    2) 1-degree beamwidth, +0.9 to +15 degrees vertical

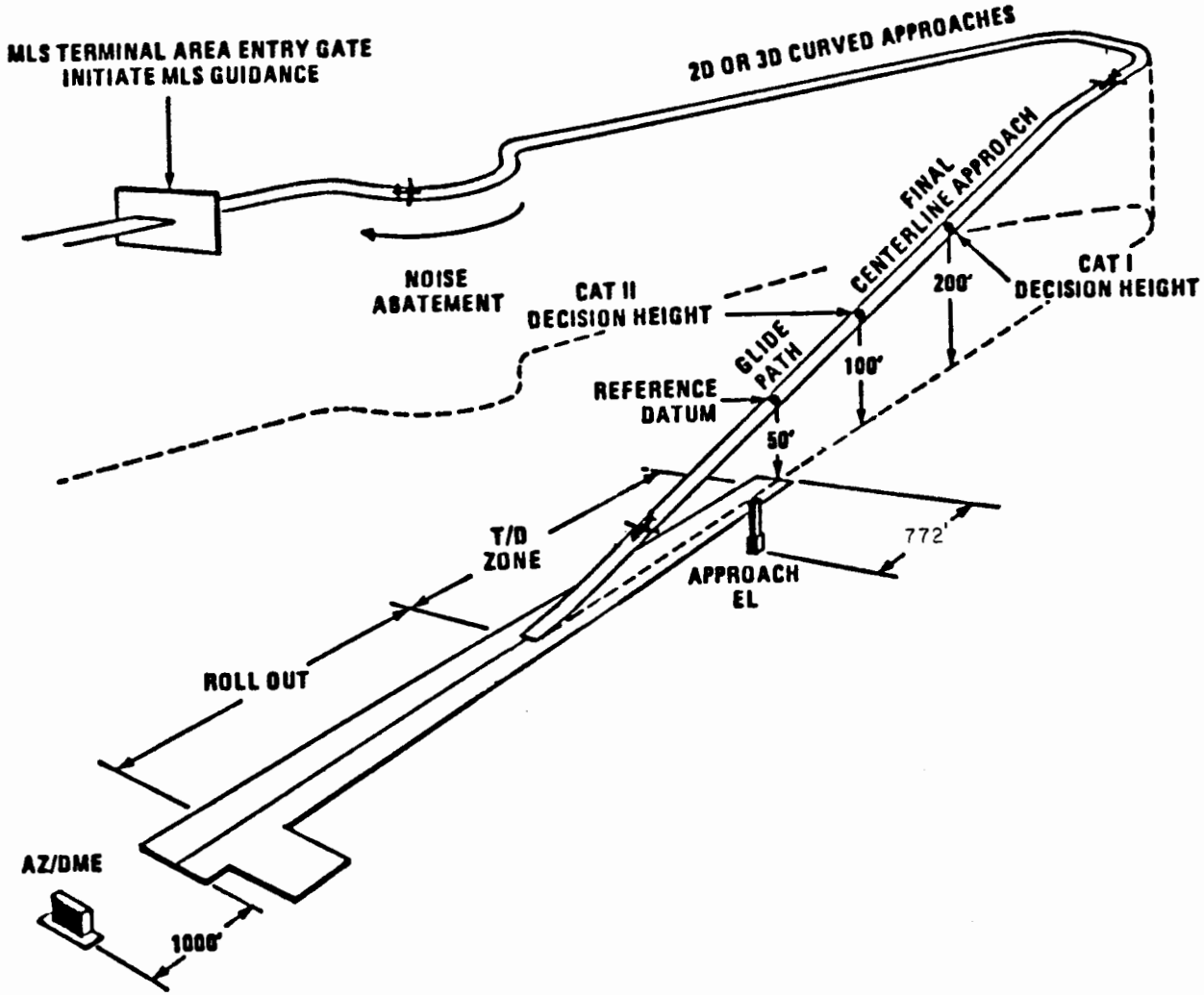

Figure 1. Standard MLS Ground System Configuration.

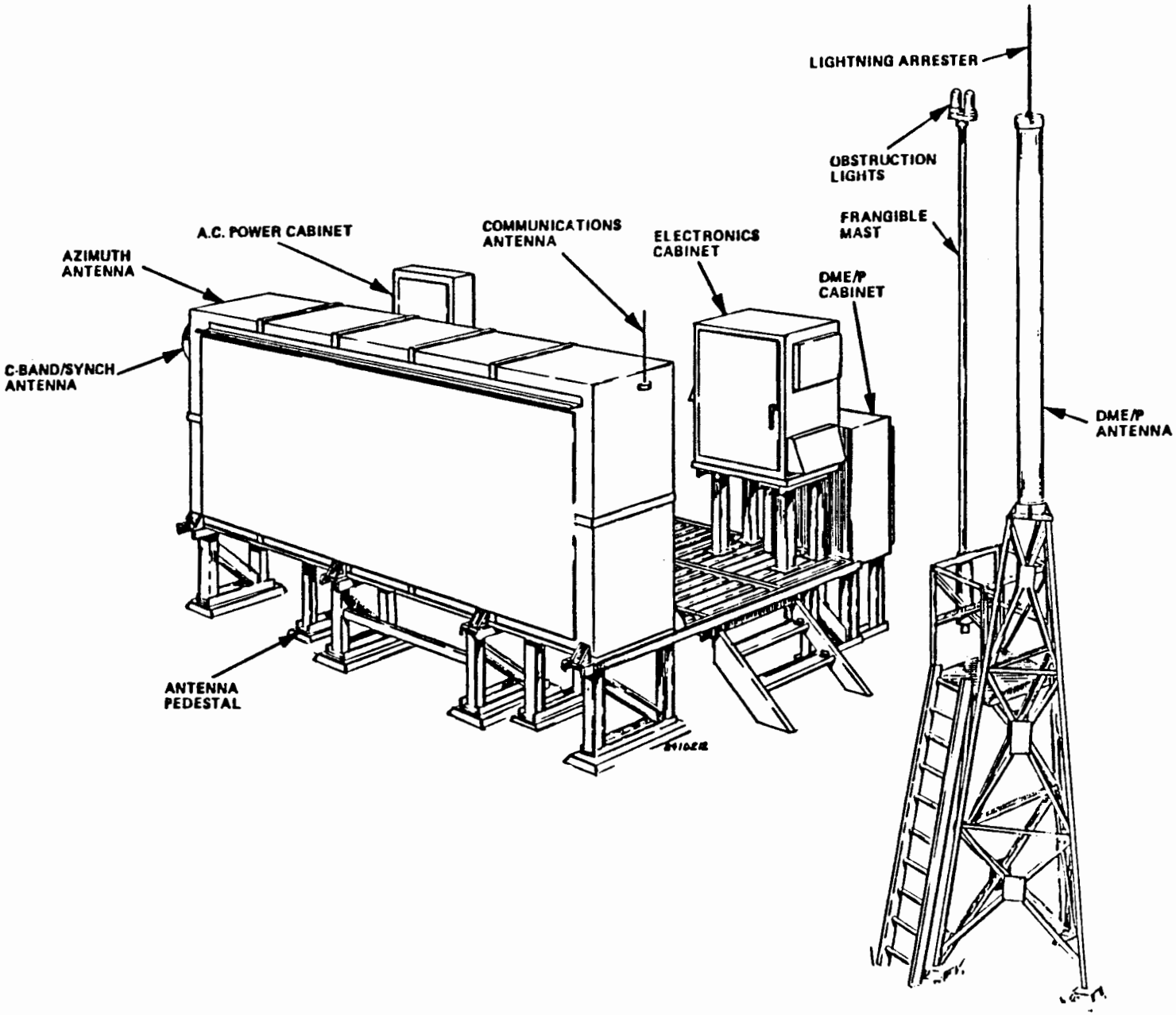

Figure 2. 1° Azimuth Equipment (Front View).

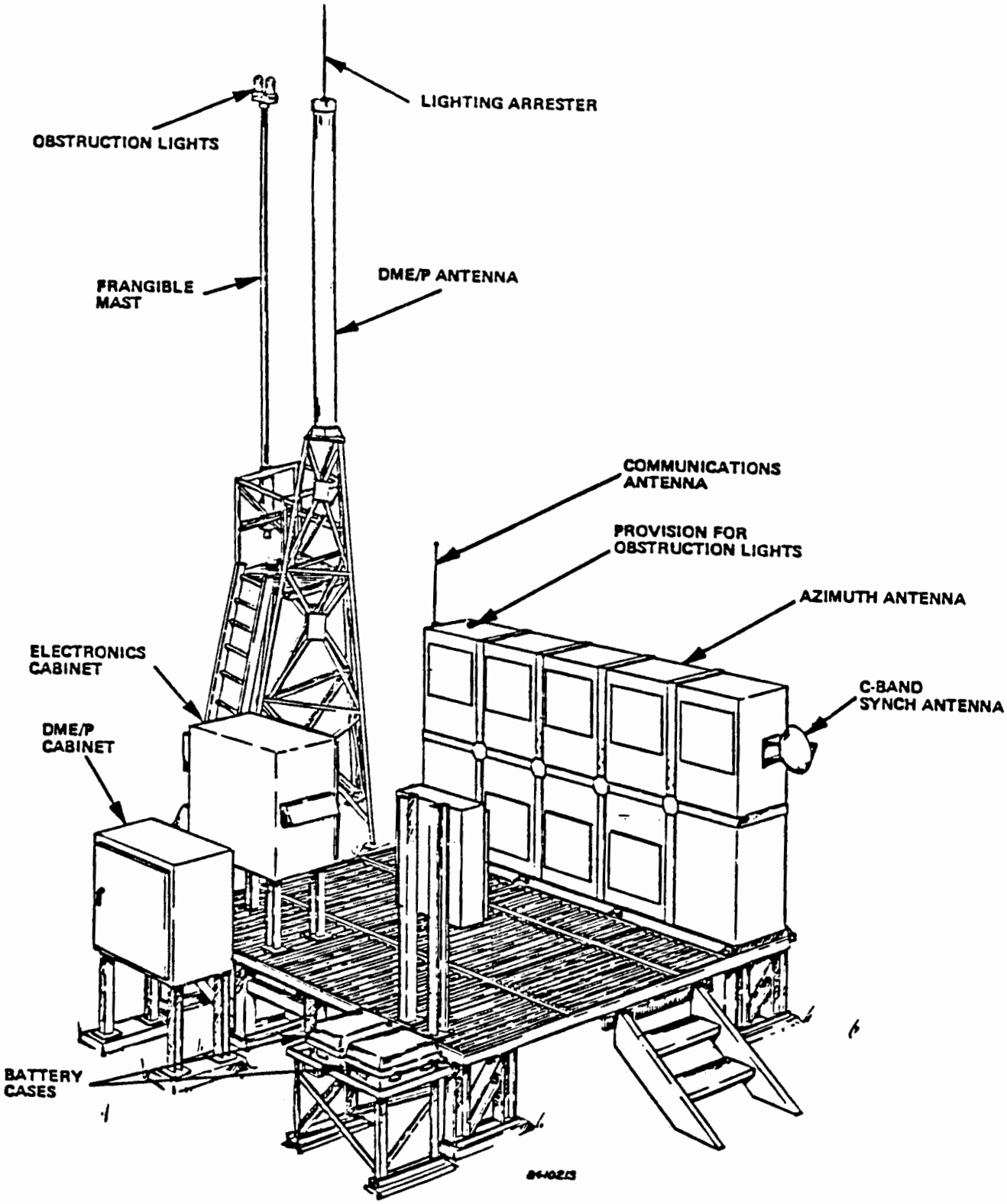

Figure 3. 1° Beamwidth, ±40° Scan Azimuth Equipment (External).

ELEVATION ANTENNA – GROUND MOUNTED

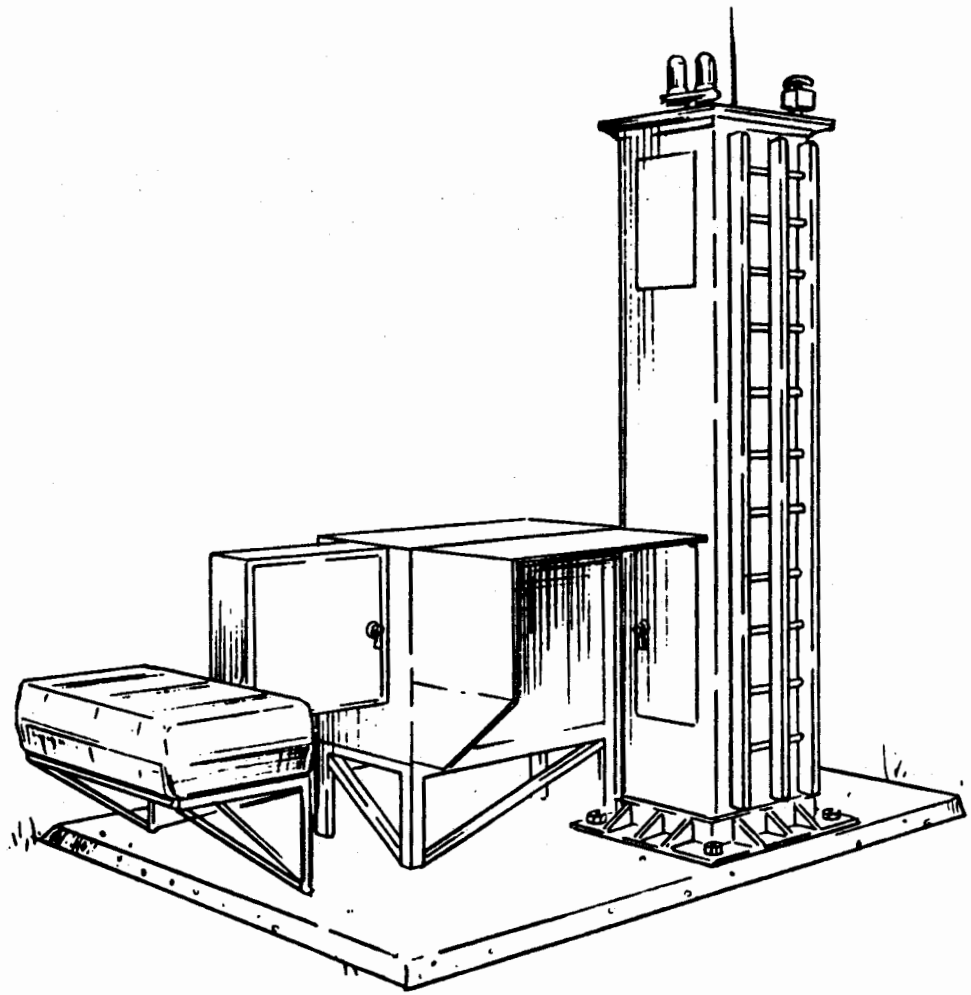

Figure 4. Approach Elevation Equipment.

proportional coverage

3) 2-degree beamwidth, +0.9 to +15 degrees vertical proportional coverage

-equipment maintenance monitor
-station power

Table 1 lists combinations of the azimuth and elevation options according to the types defined in the initial production contract.

c. Remote Control and Status Unit (RCSU). The Remote Control and Status Unit shall be installed in the primary ATC facility and shall interface directly with the MLS equipment. The RCSU shall interface with two Remote Status Units (RSU). The RCSU shall provide at least the following control and display features:

1. Intensity controls for lamps and indicators.
2. Controls for switching the function transmissions ON or OFF. The capability to re-start the equipment, (i.e., attempt to enter the normal radiating mode from a shutdown condition), shall also be provided.
3. Aural indication for alarm and alert conditions with loudness control and silence switch. The range of adjustment of loudness shall not allow complete silencing of the aural alarm. The silence switch shall be a momentary type which will silence the current alarm, reset upon release, and then automatically re-arm to be ready for the next alarm.
4. Visual indicators for Normal, Secondary Alerts, and Alarm conditions.
5. Separate status indications for each MLS Ground Equipment.
6. Mechanism to change and display auxiliary data words.
7. Primary battery power status indicator for each MLS Ground Station.
8. Approach Azimuth/Back Azimuth switching control for systems without an interlocked system on the opposite runway end.
9. Runway selection (Interlock) control for systems configured on opposite runway ends.
10. Power ON/OFF switch for both the status/control unit and the electronics unit.
11. Capability shall be provided to allow easy implementation of a dual equipment configuration.
12. Annunciator for control-mastership requests from RMMS and from the MLS ground stations.
13. Deny/Grant switch for responding to control-mastership requests.

d. Remote Status Unit (RSU). Each Remote Status Unit to be installed in other than the primary ATC facility shall provide the following minimum features:

1. Intensity controls for lamps and indicators.
2. Aural indication for alarm and alert conditions with loudness control and silence switch. The range of adjustment of loudness

Table 1. System Configurations.

TYPE	Azimuth Guidance		Elevation Guidance	
	Beamwidth	Scan Angle	Beamwidth	Scan Angle
TYPE I	2°	$\pm 40^\circ$	1.5°	0.9° to 15°
TYPE II	2°	$\pm 40^\circ$	1°	0.9° to 15°
TYPE III	1°	$\pm 40^\circ$	1.5°	0.9° to 15°
TYPE IV	1°	$\pm 40^\circ$	1°	0.9° to 15°
TYPE V	1°	$\pm 10^\circ$	1°	0.9° to 15°
TYPE VI	1°	$\pm 60^\circ$	1°	0.9° to 15°
TYPE VII	3°	$\pm 40^\circ$	2°	0.9° to 15°

shall not allow complete silencing of the aural alarm. The silence switch shall be a momentary type which will silence the current alarm, reset upon release, and then automatically re-arm to be ready for the next alarm.

3. Visual indicator for Normal, Secondary Alerts, and Alarm conditions.
4. Separate status indications for each MLS Ground Equipment.
5. Primary battery power status indicator for each MLS Ground Station.
6. Power ON/OFF switch.

2. SIGNAL FORMAT. The MLS angle guidance and data functions are time-multiplexed on a single-frequency channel, selected from available channels from 5031 to 5090.7 MHz. Each function has a unique identification code. The range information provided by the DME/P is transmitted asynchronously on a paired frequency from 979 to 1213 MHz [3].

a. Guidance Function Formats. The format for the angle guidance functions is shown in Figure 5. The format commences with a preamble time slot followed by sector and scanning beam time slots. The preamble contains the function identification code. This allows the individual function to be randomized in order to reduce synchronous interference effects.

b. Data Formats. A provision has been made in the MLS signal format for transmission of basic and auxiliary data. The data are transmitted by differential phase-shift keying (DPSK) of the radio frequency carrier [3].

The basic data format is composed of 32-bit words. The preamble is composed of the first 12 bits, the next 18 bits are for data transmission, and the last two are for parity (see Figure 6a).

Auxiliary data are encoded into 76-bit words initiated by a 12-bit preamble. Two formats are provided, one for digital data transmission, and the second for alphanumeric data (see Figure 6b).

c. Morse Code Identification. On the C-band frequency, the MLS azimuth equipment is identified in International Morse Code by the approach azimuth station and the back azimuth station, when present, by use of a DSPK bit following the preamble. The identification is composed of a four letter word starting with the letter M, and is transmitted approximately six times a minute. In the receiver a "one" initiates the morse code symbol and a "zero" terminates it (see Figure 7) [3].

3. DATA TRANSMISSION. An MLS facility transmits basic data to the airborne receiver to provide the information needed for approach computations. This information includes:

- minimum glide slope
- facility identification
- approach azimuth to threshold distance, and coverage limit
- equipment performance levels
- beamwidths
- approach azimuth and basic azimuth magnetic orientation

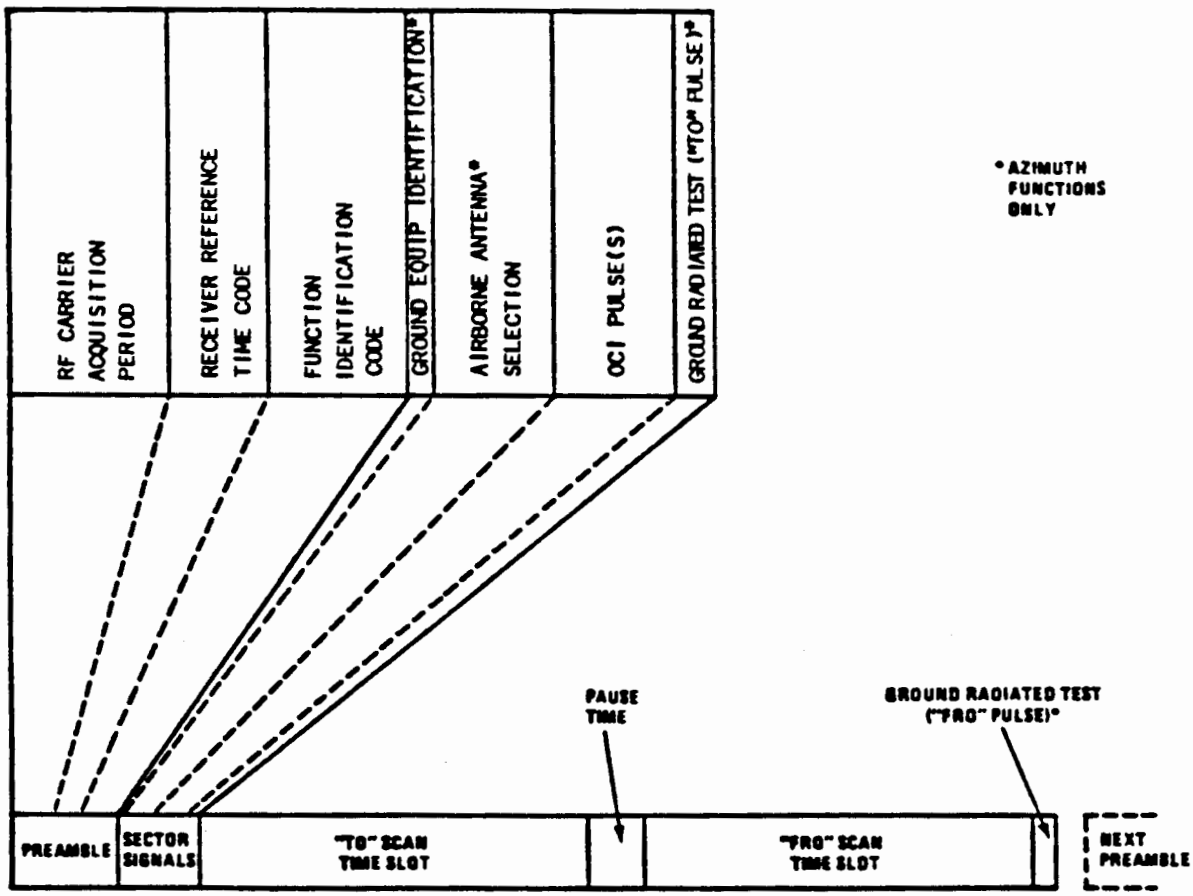

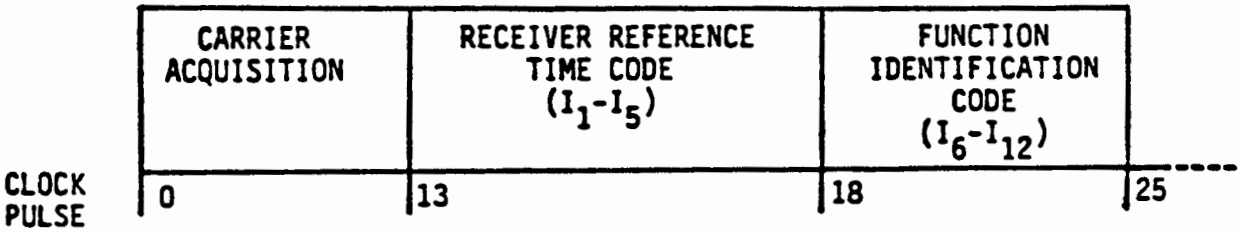

Figure 5. Format for the Angle Guidance Functions.

	PREAMBLE (I_1-I_{12})	DATA TRANSMISSION (I_{13}-I_{30})	PARITY (I_{31}-I_{32})
CLOCK PULSE	0 — 24	25 — 42	43 — 44

Figure 6a. Basic Data Organization.

PREAMBLE	ADDRESS	DATA	PARITY
I_1-I_{12}	I_{13}-I_{20}	I_{21}-I_{69}	I_{70}-I_{76}

(a) Digital Data

		ASCII CHARACTERS						
PREAMBLE	ADDRESS	#1	#2	#3	#4	#5	#6	#7
I_1-I_{12}	I_{13}-I_{20}	I_{21}-I_{28}	I_{29}-I_{36}	I_{37}-I_{44}	I_{45}-I_{52}	I_{53}-I_{60}	I_{61}-I_{68}	I_{69}-I_{76}

(b) Alphanumeric Data

Figure 6b. Auxiliary Data Word Organization.

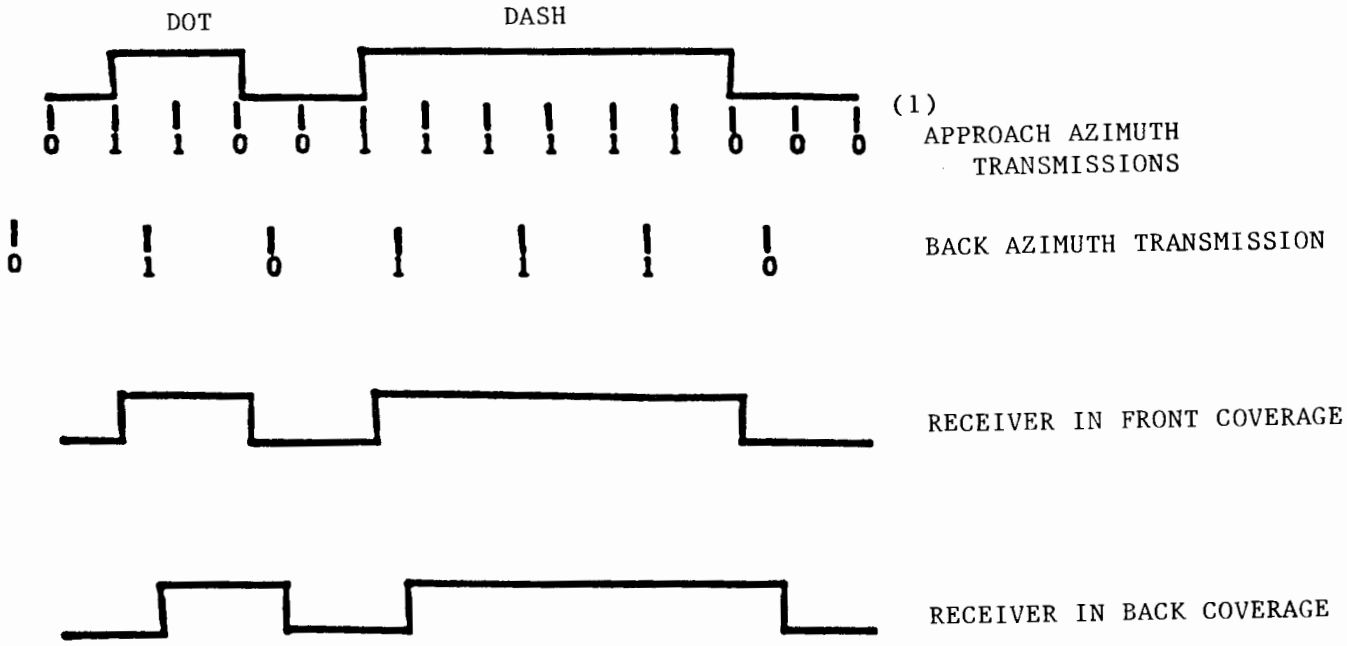

NOTE (1): The high rate Approach Azimuth has three times the bit rates shown.

Figure 7. Morse Code Technique.

Basic data will be supplemented by auxiliary data. Auxiliary data will include antenna siting geometry information.

4. ANGULAR MEASUREMENT CONCEPT [3]. Angular position, either elevation or azimuth, is determined by the amount of time elapsed between the received TO and FRO scanning beam main lobes. Angular position is calculated by the airborne receiver as follows:

$$THETA = (T_o - t)V/2$$

Where:

THETA = Azimuth or elevation angle in degrees.

T_o = Time separation in microseconds between TO and FRO beam centers corresponding to zero degrees.

t = Time separation in microseconds between TO and FRO beam centers.

V = Scan velocity scaling constant in degrees per microsecond.

Table 2 lists values for these parameters [3].

a. Azimuth. The azimuth antenna generates a narrow, vertical, fan-shaped beam which electronically scans across its coverage area (see Figure 8). The azimuth scanning convention is shown in Figure 9 [3]. As viewed from above the azimuth antenna, the TO scan is in the clockwise direction and the FRO scan is in the counter-clockwise direction. An illustrated example is shown in Figure 10.

b. Elevation. The elevation antenna generates a narrow, horizontal, fan shaped beam which electronically scans across its coverage area (see Figure 11). The elevation scanning convention is shown in Figure 12 [2]. The TO scan is upward. The FRO scan is downward.

5. FUNCTION COVERAGE REQUIREMENTS. This section outlines the minimal volume of airspace required to be supplied with MLS guidance information, proportional guidance and clearance sectors, as described in FAA-STD-022c [3]. Coverage options shown will be addressed in Section 6, MLS Expansion Capabilities.

a. Approach Azimuth. The approach azimuth ground equipment shall provide guidance information as illustrated in Figure 13. The description of the minimum allowable guidance regions is as follows [3]:

Approach Region

- horizontally within a sector at least ±40 degrees about the runway centerline originating at the point on centerline closest to

Table 2. Value of Angle Guidance Parameters.

Function	Maximum Scan Angle (degrees)	Value of t for Maximum Scan Angle (usec)	T_o (usec)	V (degrees/ usec)
APPROACH AZIMUTH	-62 to +62	13 000	6 800	+0.020
HIGH RATE APPROACH AZIMUTH	-42 to +42	9 000	4 800	+0.020
BACK AZIMUTH	-42 to +42	9 000	4 800	-0.020
APPROACH ELEVATION	-1.5 to +29.5	3 500	3 350	+0.020
FLARE ELEVATION	-2 to +10	3 200	2 800	+0.010

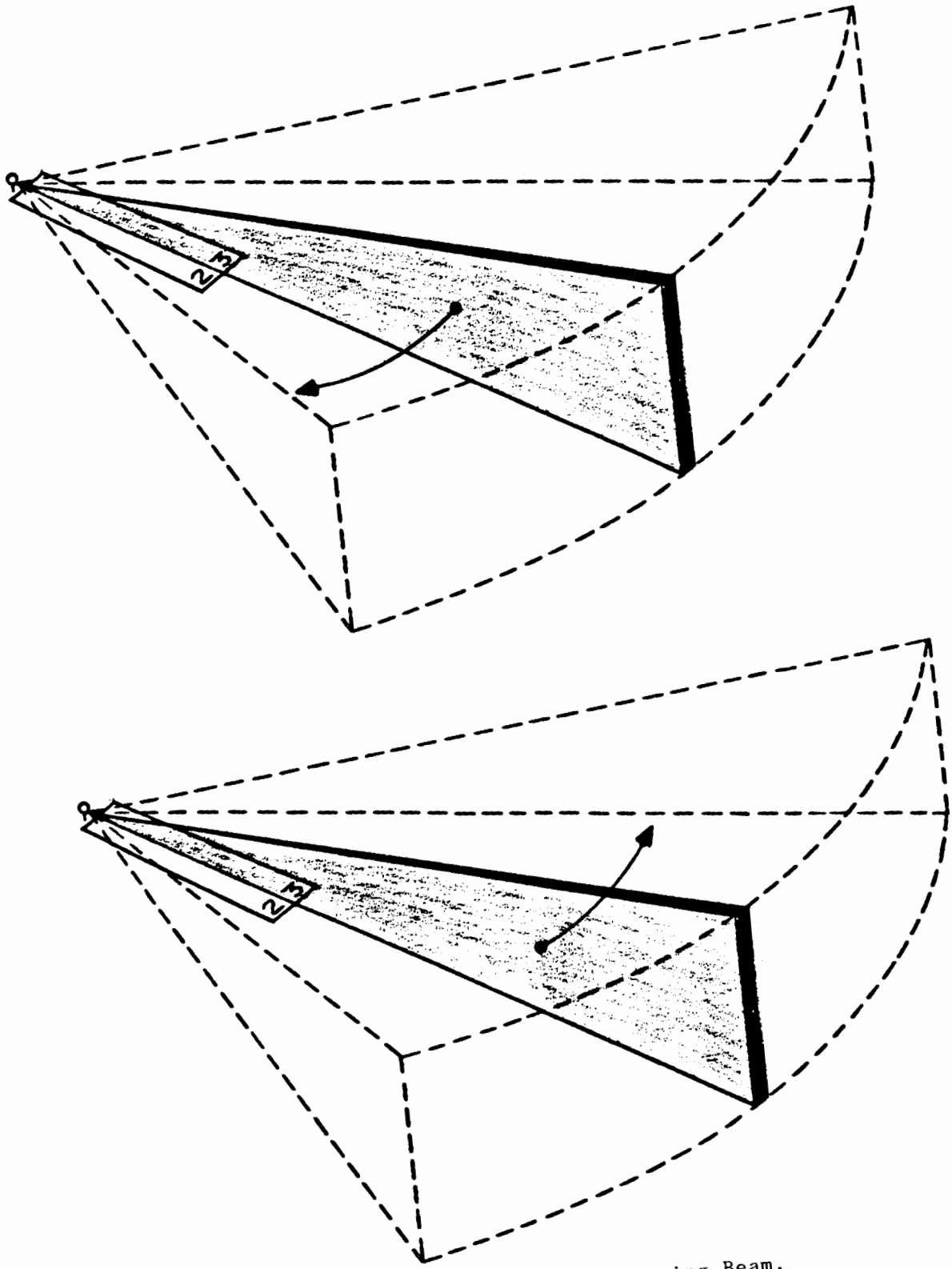

Figure 8. Azimuth Antenna Scanning Beam.

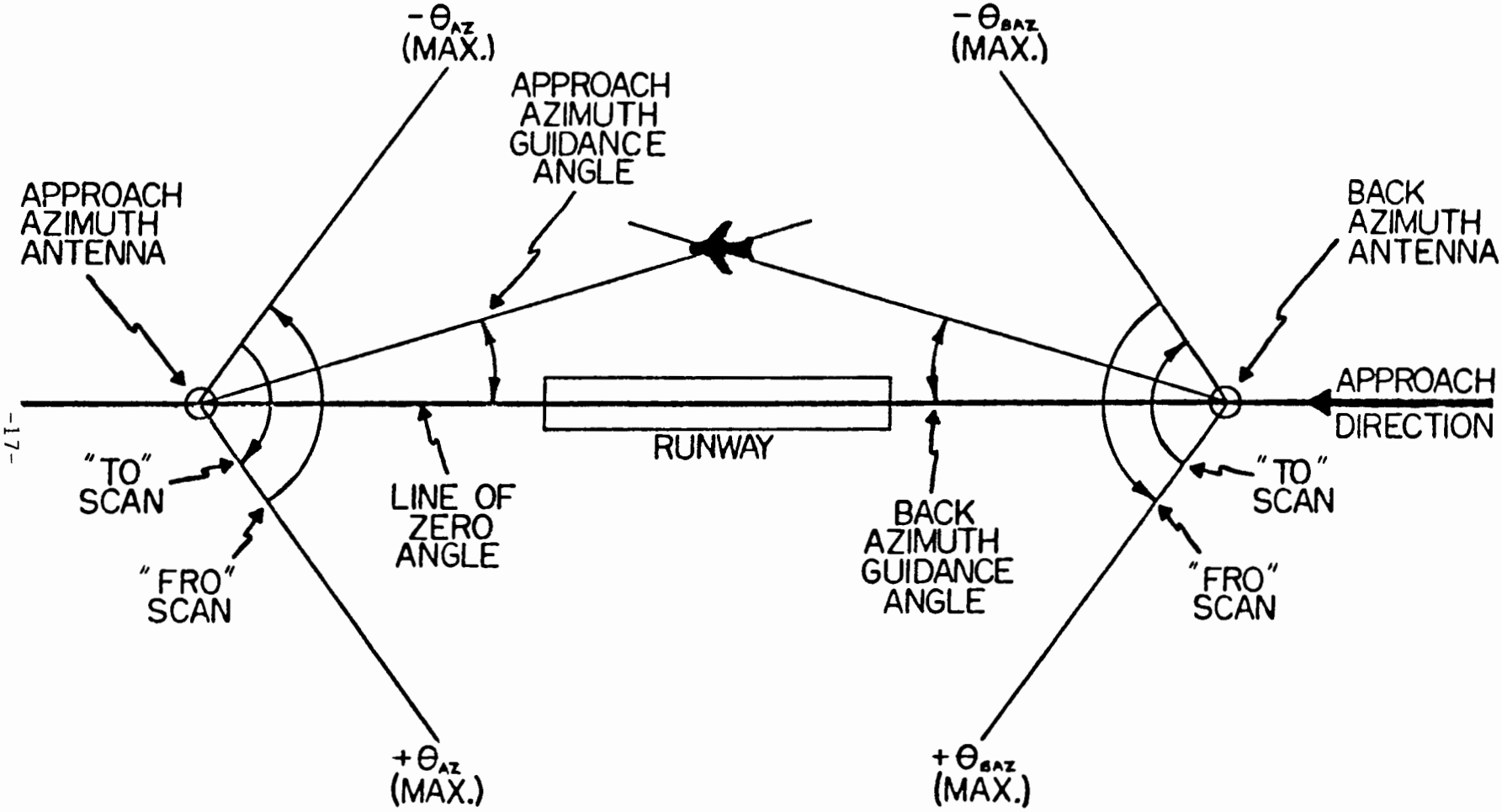

Figure 9. Azimuth Scanning Convention.

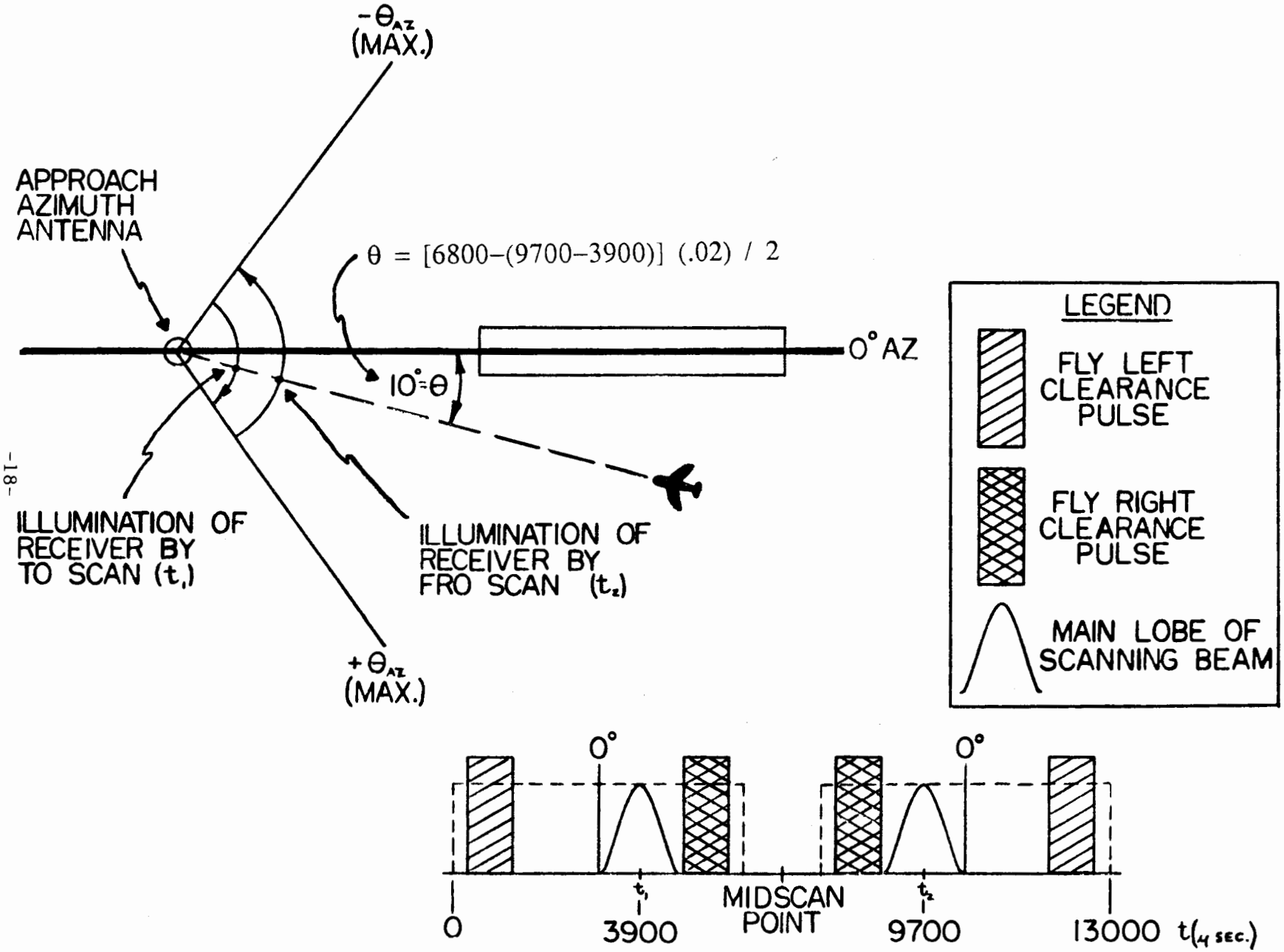

Figure 10. Illustration of Azimuth Scanning Concept.

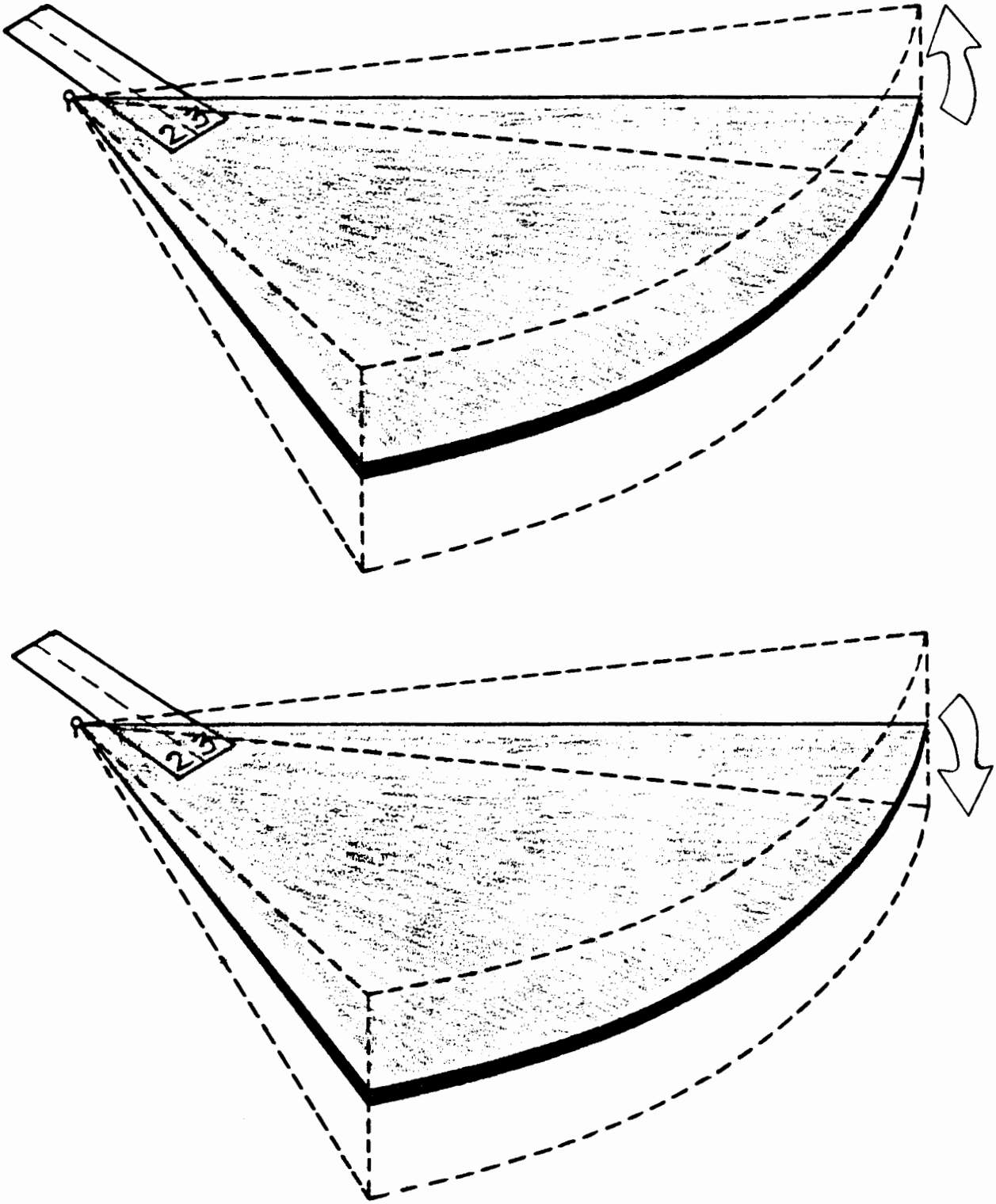

Figure 11. Elevation Antenna Scanning Beam.

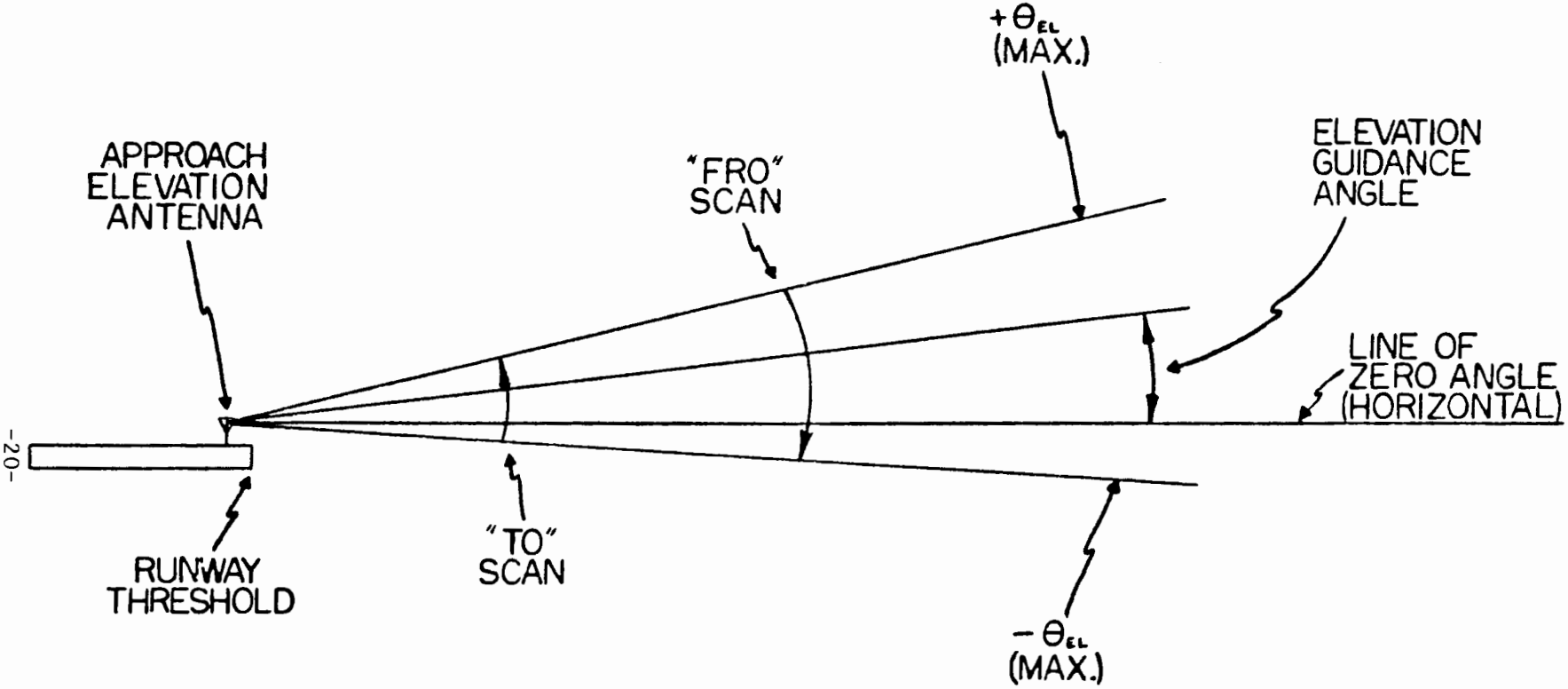

Figure 12. Elevation Scanning Convention.

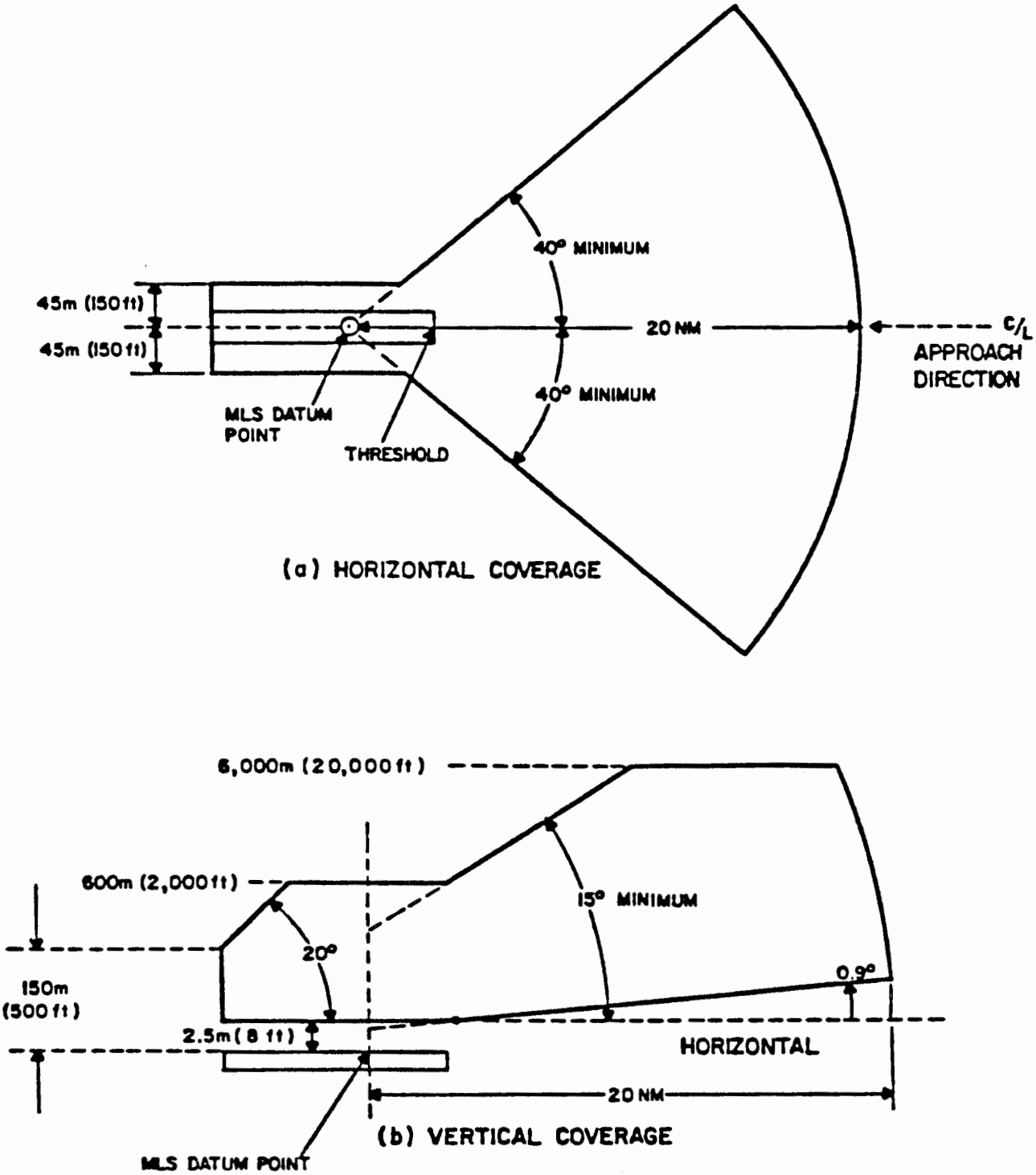

Figure 13. Approach Azimuth/Data Coverage.

the elevation antenna phase center (the MLS datum point) and extending in the direction of approach to 20 nautical miles. For a system providing ±60 degree lateral coverage, the range requirement is reduced to 14 nautical miles beyond the ±40 degree angular coverage.

- vertically between conical surfaces which originate on a vertical line passing through the MLS datum point, of which:

  (1) The lower surface crosses threshold at 2.5 meters (8 ft.) above the runway centerline inclined at 0.9 degree above the horizontal;

  (2) The upper surface crosses threshold at 600 meters (2,000 ft.) above centerline inclined at 15 degrees above the horizontal to a height of 6,000 meters (20,000 ft.).

Runway Region

- Horizontally within a sector 45 meters (150 ft.) each side of the runway centerline beginning at the stop end and extending parallel with the runway centerline in the direction of the approach to join the approach region.

- Vertically Between

  (1) A horizontal surface which is 2.5 meters (8 ft.) above the runway centerline and;

  (2) A conical surface originating along the centerline extended beyond the stop end of the runway which crosses the stop end at 150 meters (500 ft.) above centerline inclined at 20 degrees above the horizontal to a height of 600 meters (2,000 ft.).

Proportional Guidance

- Proportional guidance shall be provided in the runway region and in a sector of at least ±10 degrees about the runway centerline extended in the approach region.

b. Back Azimuth. If azimuth guidance is desired for missed approaches and departure guidance (back azimuth), it will be provided by a standard MLS located at the opposite end of the runway with its preamble and time slot changed accordingly. This back azimuth shall supply guidance information in the region shown in Figure 14. The minimal guidance volume permitted is as follows [3]:

Missed Approach/Back Azimuth Region

- Horizontally in the back azimuth region within a sector ±40 degrees about the runway centerline originating at the MLS datum point and

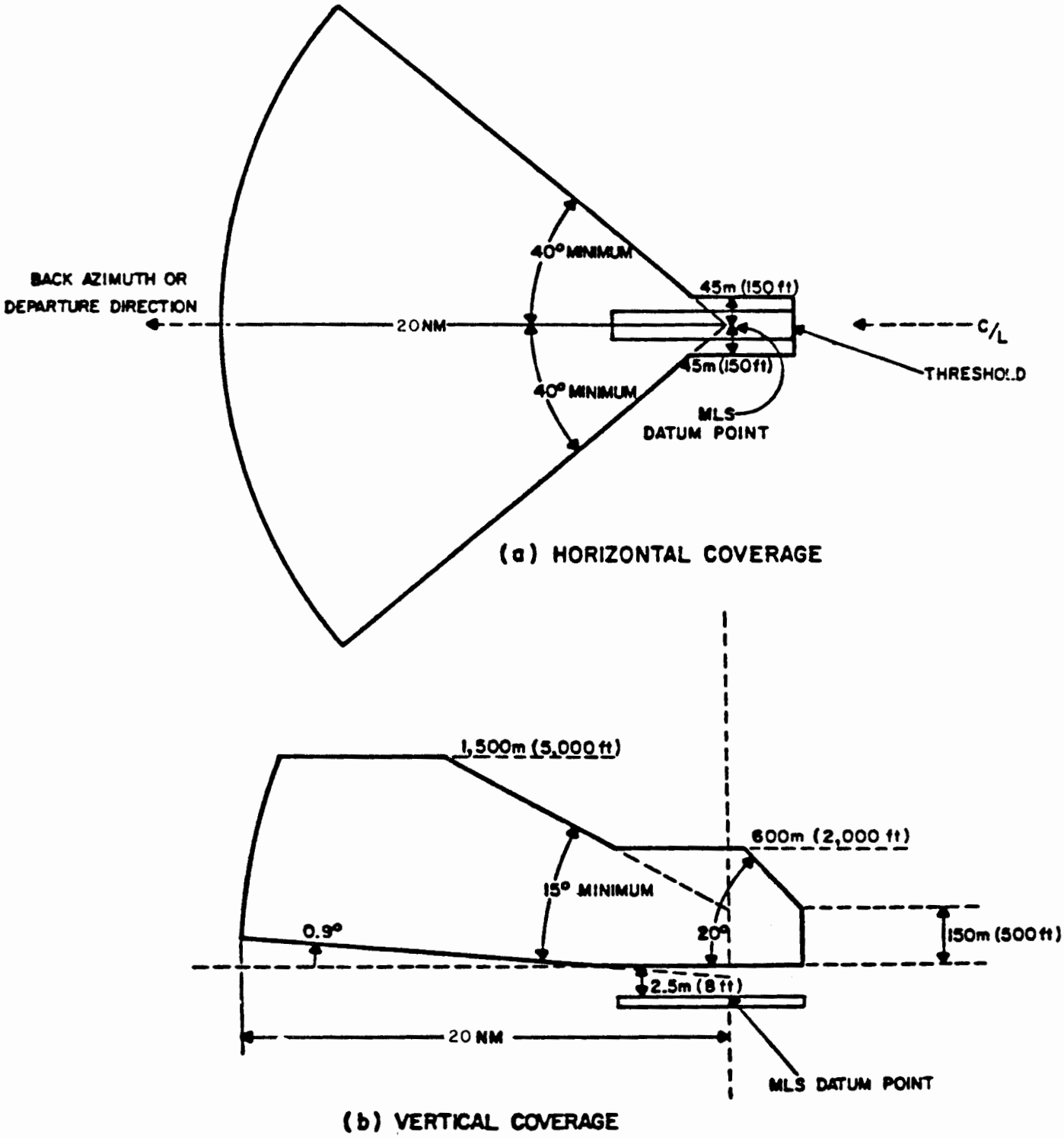

Figure 14. Back Azimuth/Data coverage.

extending in the direction of missed approach at least to 20 nautical miles.

- Vertically in the back azimuth region between conical surfaces which originate on a vertical line passing through the MLS datum point, of which:

  (1) The lower surface crosses the stop end at 2.5 meters (8 ft.) above the runway centerline inclined at 0.9 degree above the horizontal;

  (2) The upper surface crosses the stop end at 600 meters (2,000 ft.) above centerline inclined at 15 degrees above the horizontal to a height of 1,500 meters (5,000 ft.).

Runway Region

- Horizontally within a sector 45 meters (150 ft.) each side of the runway centerline starting at the threshold and extending parallel with the runway centerline in the direction of the stop end to join the Back Azimuth region.

- Vertically Between:

  (1) A horizontal surface which is 2.5 meters (8 ft.) above the runway centerline; and

  (2) A conical surface originating along the runway centerline extended beyond the stop end of the runway which crosses the stop end at 150 meters (500 ft.) above centerline incline at 20 degrees above the horizontal up to a height of 600 meters (2,000 ft.).

Proportional Guidance

- Proportional Guidance shall be provided in the runway region and in a sector of at least ±10 degrees about the runway centerline extended in the back azimuth region.

c. Approach Elevation. The approach elevation ground equipment shall provide proportional guidance in the regions illustrated in Figure 15. The description of the regions is as follows [3]:

- Laterally throughout the runway and approach regions within which proportional guidance is provided by the Approach Azimuth ground equipment.

- Longitudinally from 75 meters (250 ft.) from the MLS datum point in the direction of the approach to 20 nautical miles.

Vertically within the sector bounded by:

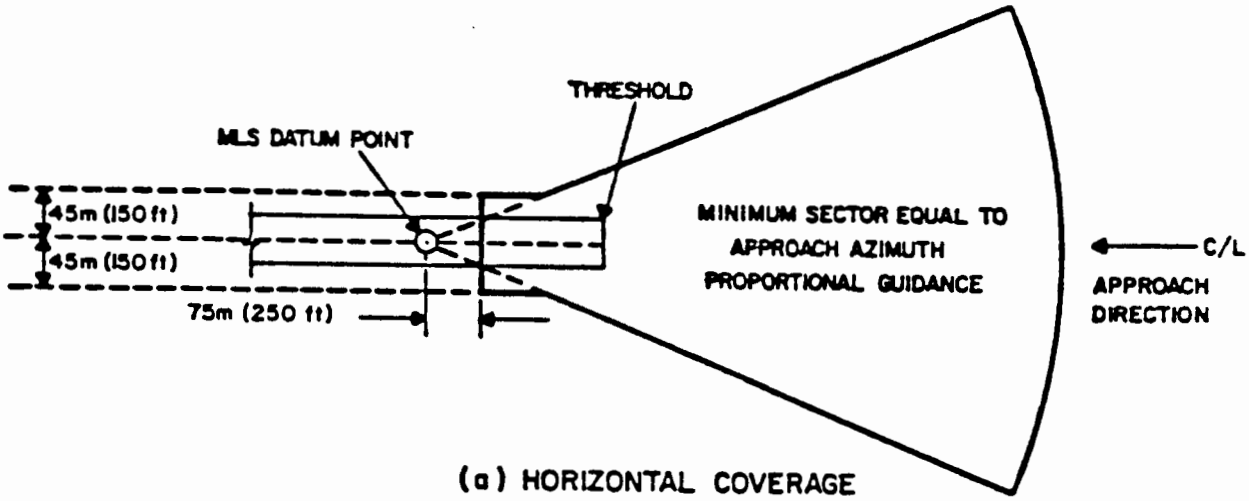

(a) HORIZONTAL COVERAGE

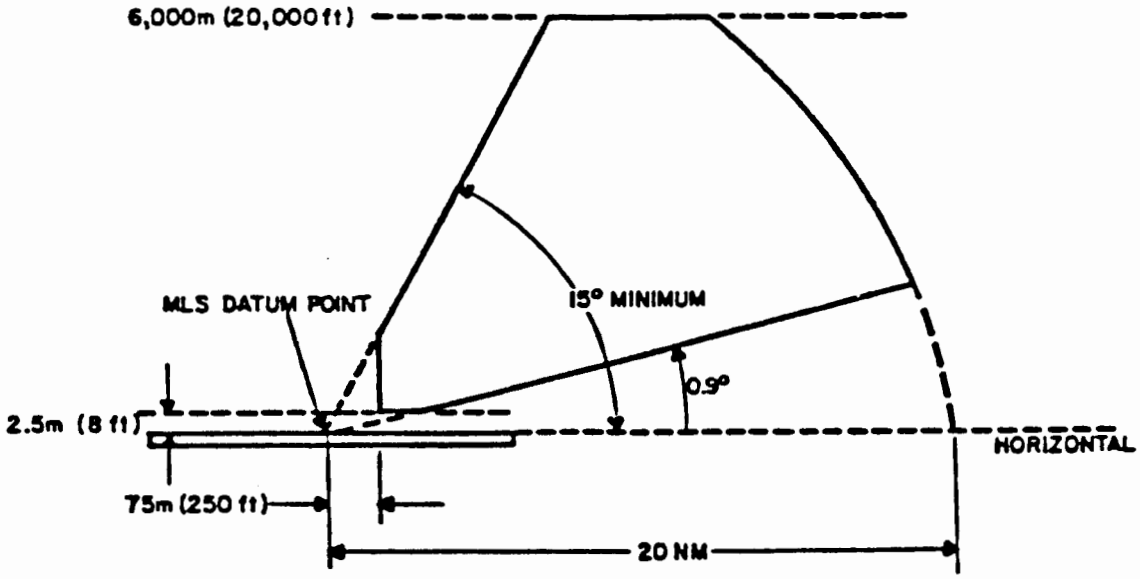

(b) VERTICAL COVERAGE

Figure 15. Approach Elevation Coverage.

- A surface which is the locus of points 2.5 meters (8 ft.) above the runway;

- A conical surface originating at the MLS datum point and inclined at 0.9 degree above the horizontal; and

- A conical surface originating at the MLS datum point and inclined 15 degrees above the horizontal up to a height of 6,000 meters (20,000 ft.).

d. Data Coverage. Basic data shall be transmitted throughout the Approach Azimuth coverage region (words 1-6) and the Back Azimuth coverage region (words 4, 5, 6).

In the absence of Back Azimuth, auxiliary data words A1, A2, and A3 shall be transmitted throughout the Approach Azimuth coverage region. However, when the Back Azimuth coverage is present, auxiliary words A3 and A4 shall be transmitted throughout both the Approach and Back azimuth coverage regions.

e. DME/P. DME/P coverage shall be omnidirectional as shown in Figure 16. Coverage will be provided at all azimuth angles and angles of elevation between +0.85 degrees to a minimum of +15 degrees relative to the DME/P antenna phase center and up to heights of at least 20,000 ft.

6. MLS EXPANSION CAPABILITIES.

a. Dual Mode Azimuth Antennas. The MLS azimuth antenna is capable of supplying either approach or back azimuth function. This function is generally implemented when two complete sets of MLS ground equipment are used to serve the same runway. The MLS equipment is configured so that both ends of the runway are supplied with precision approach guidance (i.e., dual azimuth antennas, DME/P, and an elevation station at each end of the runway). However, there is a period during the switching of the system configuration when no MLS guidance is available. This period will be no greater than 30 seconds.

b. Auxiliary Data. MLS can provide for transmission of additional auxiliary data. This feature may include meteorological information, runway status, and wind velocities. The exact content of the additional auxiliary data has not been standardized at this time.

c. 360 Degree Azimuth. Time is reserved in the MLS format for 360 degree azimuth coverage, and this function is being considered.

d. Limited-Scan Azimuth Coverage. MLS can also provide non-symmetrical azimuth coverage. An example of this feature is 10 degrees proportional guidance on one side of the runway and 40 degrees on the other. This feature can be used to reduce multipath reflections caused by objects close to one side of the runway without sacrificing coverage on the other.

COVERAGE IS OMNIDIRECTIONAL IN AZIMUTH

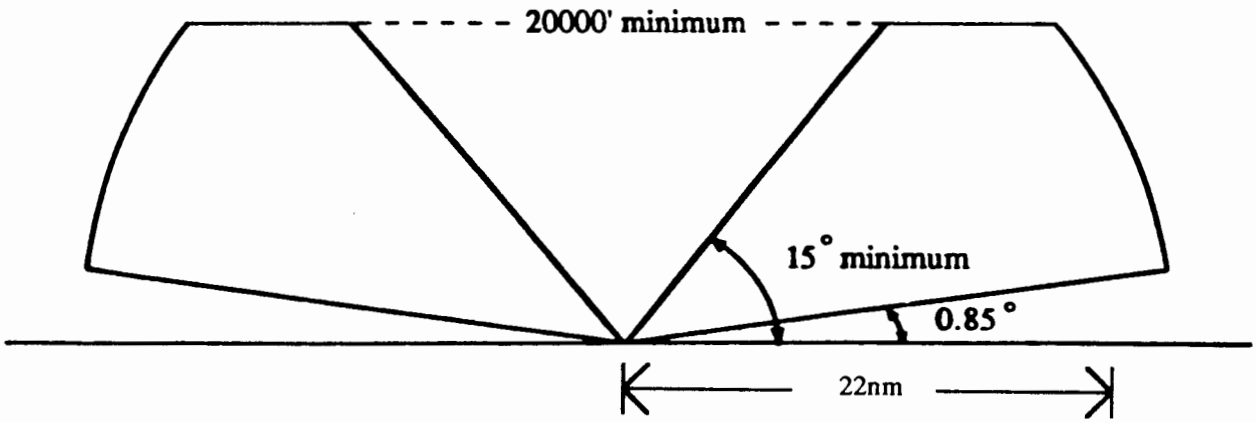

Figure 16. DME/P Coverage.

CHAPTER 3 INSTALLATION REQUIREMENTS

1. MLS POWER REQUIREMENTS. All MLS ground equipment is designed to be powered from 120/240 volts, 3 wire single phase 60Hz power [5]. This equipment must be able to operate continuously, unattended, at elevations from 0-10,000 feet. The power supply shall provide sufficient power to operate the MLS and simultaneously restore battery supply to full charge from 50 percent discharge within 36 hours.

The nominal operating voltage is 120 VAC, but the ground equipment shall be designed so that it can be powered from 102-138 VAC. Equipment requiring 240 VAC nominally will be capable of operating on 204-276 VAC. The ground equipment will tolerate a ±3Hz drift from the nominal 60Hz line frequency.

The MLS ground equipment is also able to operate from rechargeable batteries for at least two hours after loss of primary AC power. The system is designed so that performance will not be degraded in any way while it is operating from the battery supply. The system will be wired so that loss of AC power does not result in loss of MLS ground system operation during the switch to the battery back-up system [5].

The batteries are to be protected from the elements, since snow, rain, etc., could cause them to fail. The battery container will permit easy access to the batteries for inspection and maintenance. They will also be vented to the outside of any enclosing structure [5]. Heaters may be used inside the battery container to assure a minimum of 2 hours of normal equipment operation at low temperatures upon loss of primary power.

2. EQUIPMENT AND STRUCTURE REQUIREMENTS. Any electronic equipment contained in the enclosures will be designed to operate normally when exposed to temperatures of -50 to +50 degrees Centigrade and humidities of 5% to 90% [5].

All outside equipment, electronic or mechanical, will continue to function within tolerance at temperatures of -50 to +50 degrees Centigrade. The ground equipment will continue to operate within monitor tolerance when exposed to wind velocities of 70 knots in any direction in which the perpendicular component of the wind with respect to the runway centerline is not greater than 35 knots. The ground equipment will resist wind velocities of 87 knots in any direction without suffering structural or functional damage.

All outside structures will be capable of withstanding hailstones up to 0.5 inch in diameter and a snow loading of 40 psf.

3. SITE PREPARATION. While preparation for siting an MLS is underway, special attention shall be paid to the location of trees, buildings, and any large objects which might cause multipath (signal reflections) or shadowing (signal blockage) problems. If the terrain surrounding the MLS stations is not level enough to assure adequate signal coverage at threshold, equipment towers may be necessary.

It has been shown that interference from power lines, fences, and approach light systems in the far-field of the antennas will be minimal at the MLS frequency [7]. Unless these structures are unusually large, or consist of very densely spaced conductors, they will not be of concern.

Since ILS antennas rely on the formation of an image by reflection of signals from the ground, a smooth ground plane is required several thousand feet in front of the glide slope antenna to establish an acceptable glide path; this is not the case with MLS.

4. INTERCONNECT REQUIREMENTS.

a. Power. When site engineering commences, provisions are to be made for 120/240 volt single phase AC power to be supplied to all MLS ground equipment. Power for approach lighting and the azimuth station are to be kept independent of each other. Transformers must be kept out of the obstacle free zones.

b. Communications. A communications link must be provided between all MLS ground equipment serving a particular runway and its Remote Control and Status Unit (RCSU) and Remote Status Unit (RSU). Communications are required for three purposes. One is so that the ground equipment transmissions can be synchronized. The second is to provide equipment status to Air Traffic Control (ATC) personnel. The third is to provide data to the Remote Maintenance Monitor System (RMMS). This communications link may be provided through any of three media; wire lines, fiber optics cables, or UHF/VHF radio link. If wire lines already exist at an airport and they are of suitable quality for the MLS data transmissions they should be utilized where practical. Also, the existing lines should have a projected useful life of at least 10 years. If it is determined that existing cable is not useable then new fiber optics cable should be installed. The radio link should be used only as a last resort if a wire or fiber installation would be too costly or impractical.

The RCSU consists of two units. One is the control and display panel which generally should be installed in the local ATC facility (control tower) if one exists. If there is no local ATC facility it should be placed in a location where there are communications with the nearest ATC facility. The second part of the RCSU is an electronics unit that sends the information to the display panel and also is the interface point for the RMMS. Generally it should be installed in a location with easy access by maintenance personnel.

The RSU is simply a status panel that is a slave to the RCSU. It can be located at any other location where the status of the MLS is of interest. Up to two RSU's may be installed with each RCSU.

In the situation where MLS equipment is installed to serve both ends of a runway, a single RCSU (electronics and display) will control both systems.

CHAPTER 4 GENERAL DISCUSSION OF CONSIDERATIONS THAT AFFECT SITING

1. PREPARATION OF DATA. Before the installation of any MLS equipment, data are to be obtained to permit evaluation of the runway(s) to be serviced with MLS, as well as the surrounding area. These data shall include, but are not limited to, the following items:

- obstruction clearance charts. Siting considerations may dictate equipment placement near obstruction clearance boundaries.
- United States Geological Survey (USGS) topographical charts of the airport area and full service coverage area for the MLS.
- runways to be serviced with MLS, their lengths and profiles (detailed enough to accurately identify runway humps).
- description of existing navaids.
- airport conduit and cable information.
- ground traffic patterns. Ground traffic is not permitted within specified boundaries around MLS antennas.
- run-up and jet blast areas.
- category of aircraft to be serviced.
- MLS Type proposed and equipment characteristics pertinent to siting.
- airport property lines.
- U.S. Instrument Approach Procedures defining existing approach procedures to the airport and identifying obstacles in the terminal area.

Further information shall also be compiled after discussion with airport officials, FAA Aviation Standards National Field Office, Air Traffic Service, Airport Service, and Airway Facilities Regional Divisions. These consultations will provide additional insight into such topics as:

- existing and future traffic patterns. An MLS sited without consideration of future traffic demands may not provide maximum operational benefits when these additional demands are made.
- noise abatement regions.
- restricted airspace.
- any required alteration to proposed approach paths. Proper siting may require a change in some proposed approach paths.

2. AIR TRAFFIC PLANNING INPUT. To take advantage of the expanded capabilities of the MLS, it is important that siting personnel work closely with

air traffic planners. A well developed utilization plan is required to take full advantage of MLS capabilities within the ATC system. Because of this, the air traffic service has developed a facility analysis guide [8] which can be used to aid facility managers in assuring that all known considerations have been examined when planning. The result of the application of this analysis guide is a staff study which details the intended use and locations of MLS equipment. Recommendations made in this study include facility(ies) or runway(s) to be equipped, what types of approach profiles are desired, deviations required from the standard ±40 degree azimuth coverage, and how the azimuth coverage should be oriented. It is important that this information be included as input to the siting effort.

3. CRITICAL AREAS. Critical areas are regions around the MLS stations wherein objects, vehicles, or aircraft may cause serious signal degradation as a result of multipath or shadowing. Care must be taken that roads and taxiways do not pass through these critical areas unless it has been determined that the vehicular traffic will not interfere with the transmitted signal, or that traffic can be restricted during instrument approach operations.

Definitions for MLS critical areas are currently being developed; preliminary estimates will be given in Chapter 5.

4. PROPAGATION EFFECTS.

a. Multipath. A very important goal in proper MLS siting is the elimination of signal disturbances due to surrounding objects. Nearby aircraft, buildings, or terrain may cause reflection (multipath) of the scanning beam signals into the approach path, or cause diffraction or complete blockage (shadowing) of the intended direct signal. These potential problems will be different at each MLS installation.

In general, multipath phenomena can be classified as either "in-beam" or "out-of-beam." Figure 17a illustrates the plan view of an aircraft on final approach and a building at a small angle with respect to the approach path. This difference in coding angle between the approach path and the reflecting object is called the separation angle (θ_{SA}). Reflections are considered "in-beam" when the separation angle is less than about 1.7 beamwidths. Multipath problems can also occur if the airport surface is tilted to a significant degree and the separation angle is less than 1.7 beamwidths. In-beam multipath can cause guidance errors and should be eliminated. Appropriate in-beam multipath control techniques are discussed in Chapter 6.

Out-of-beam multipath is illustrated in Figure 17b. The multipath will be received at a different time than the direct signal and will generally not cause guidance error.

Figure 18 gives the elevation view of the scenario of Figure 17. It is clear that in-beam multipath will always be present due to the airport surface. Even if the airport surface is perfectly horizontal (thus zero separation angle), the in-beam multipath can cause amplitude fluctuations

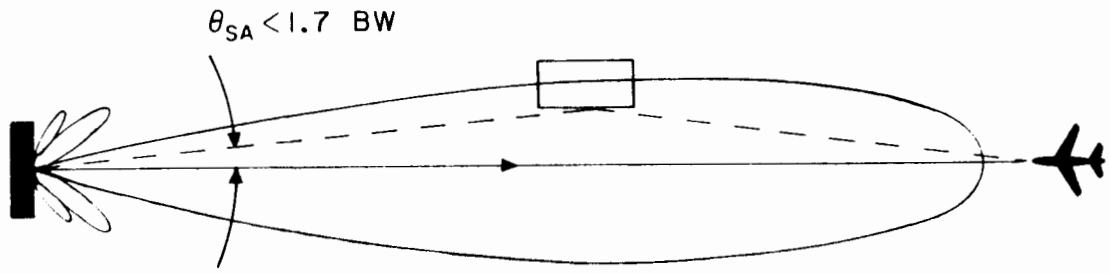

a) in-beam multipath (scan direction)

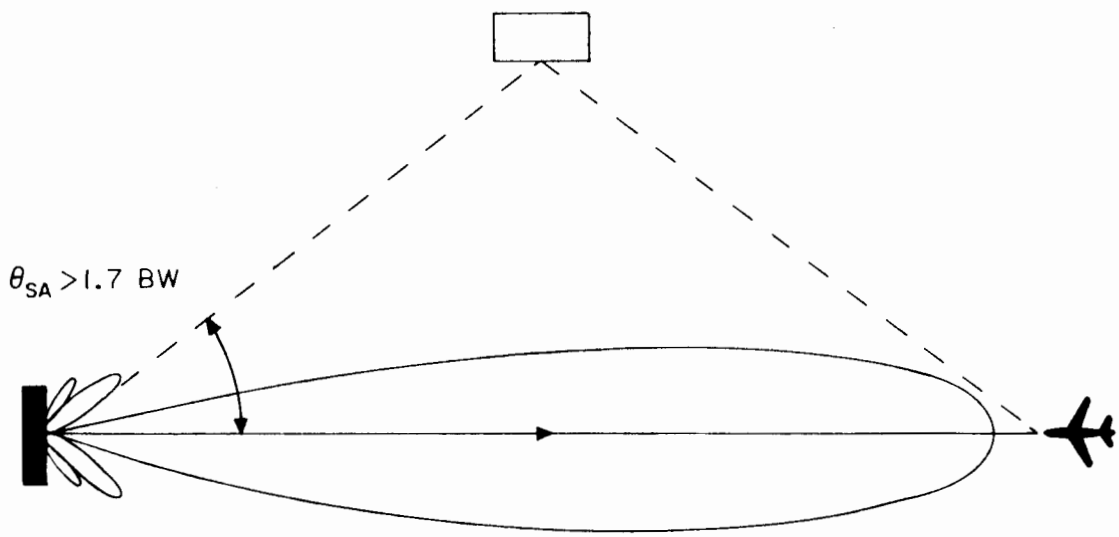

b) out-of-beam multipath (scan direction)

Figure 17. Azimuth Multipath Configurations.

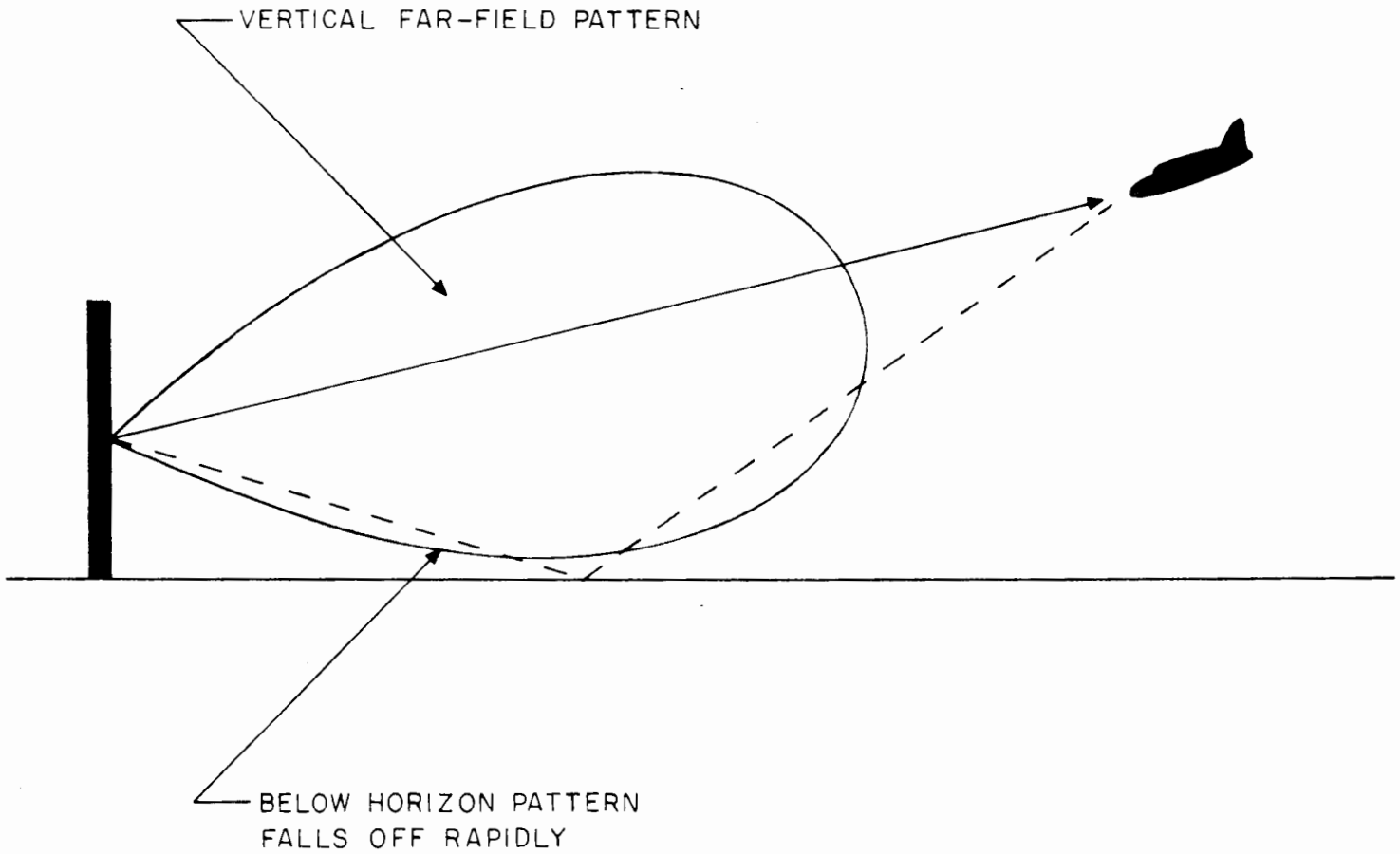

Figure 18. Azimuth Multipath in the Nonscan Direction.

which could cause problems in achieving low angle coverage. To minimize this nonscan direction multipath, the azimuth antenna pattern is designed to have a very sharp cutoff near the horizon.

These multipath principles also apply for elevation guidance. Figure 19a illustrates the elevation scanning beam in the presence of a flat airport surface. Rising terrain in the approach region, as shown in Figure 19b, can reduce the separation angle to less than 1.7 beamwidths (in-beam multipath) and cause elevation guidance error.

In-beam elevation multipath can also occur in the nonscan direction as shown in Figure 20. This phenomenon, however, does not cause errors of sufficient magnitude to be of concern in typical situations [1]. This does not mean, however, that the elevation antenna may be sited close to the side of a building; significant signal amplitude fluctuations can occur if the antenna is too near the building.

b. Shadowing. Signal shadowing may also occur due to hills, towers, or other obstacles in the guidance volume. If the shadowing object totally obscures the line-of-sight between the airborne receiver antenna and ground antenna (see Figure 21), only the diffracted signal, which is attenuated to some degree, reaches the aircraft. If the line-of-sight is not blocked, diffracted multipath exists which can be treated as being similar to reflection multipath. The potential guidance errors due to shadowing of the direct signal depend on the signal's attenuation, possible multipath from other obstacles, and the geometry of the situation. In general, proper siting can avoid shadowing phenomena so that MLS operation is not affected.

5. OUT OF COVERAGE INDICATION (OCI) REQUIREMENT. One of the requirements of the MLS system design is to minimize the presence of false courses in all regions. MLS specifications require that OCI signals must be provided in all regions beyond the guidance sector (both azimuth and elevation) where false courses exist which can be acquired and tracked by an aircraft. Part of the siting process is to identify objects which may reflect the scanning beam or clearance signals and cause a false course. Figure 22 shows a typical scenario for azimuth where OCI might be required. A scenario whereby the elevation signal can get reflected into a region above the service volume is highly unlikely. Therefore it is expected that the use of OCI for a site induced elevation false course will be rare.

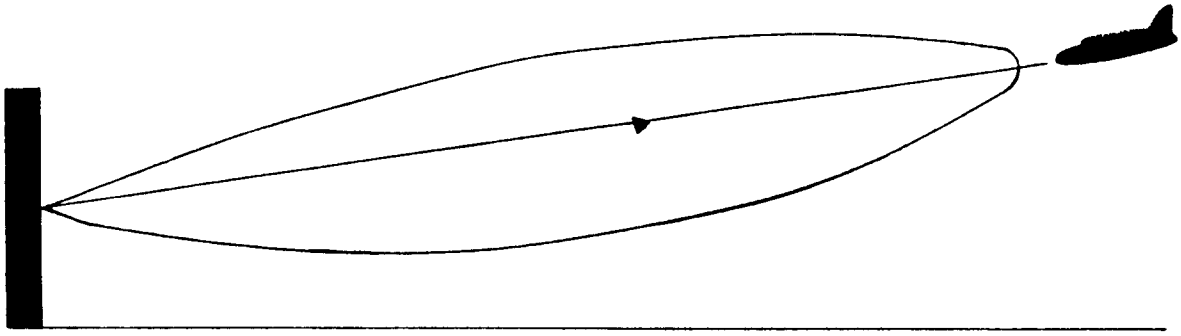

a) no in-beam multipath

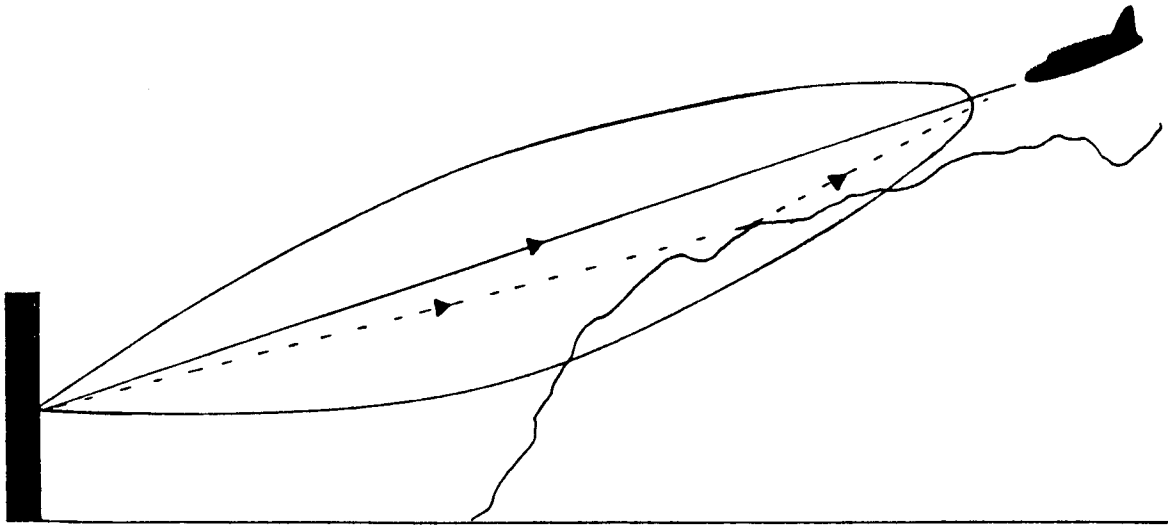

b) rising terrain causes in-beam multipath

Figure 19. Elevation Multipath in the Scan Direction.

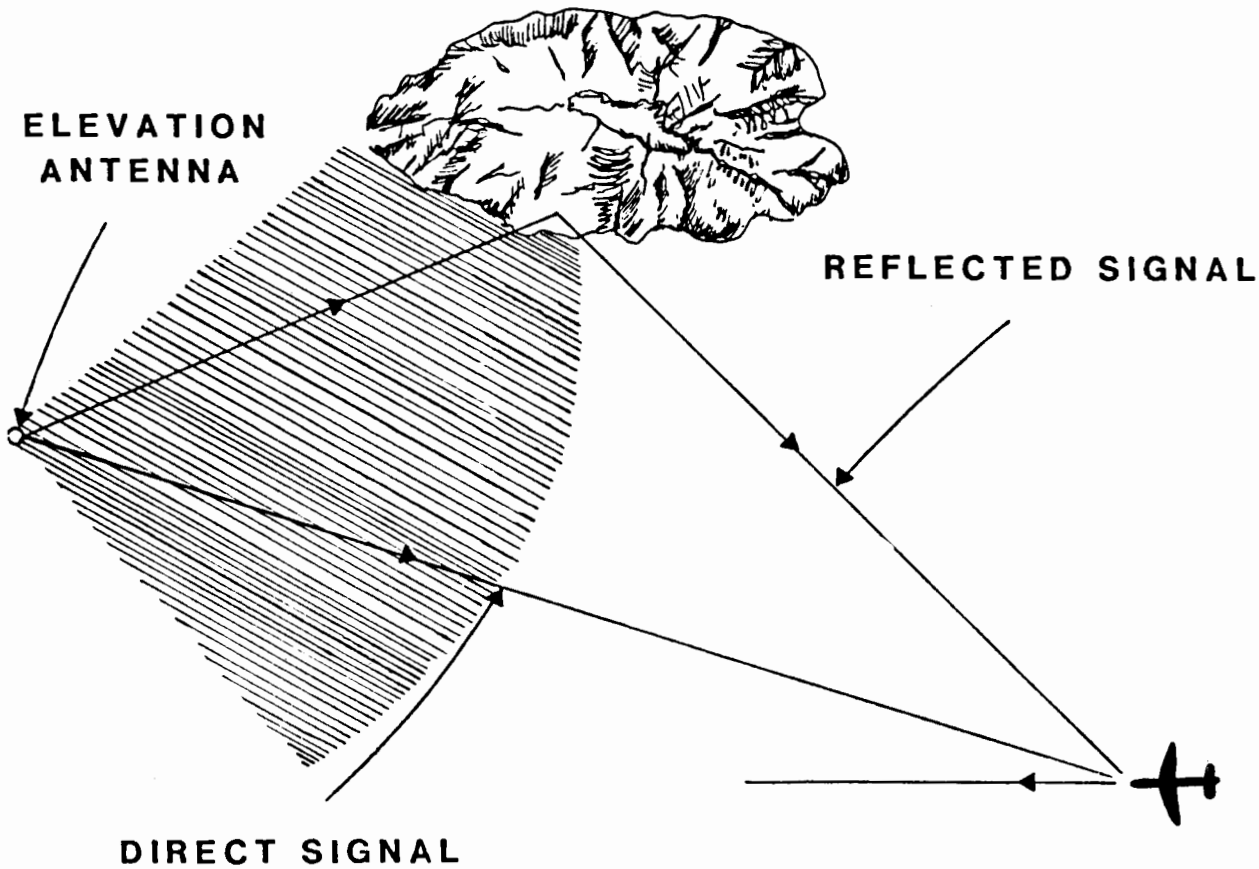

Figure 20. Elevation Multipath in the Nonscan Direction.

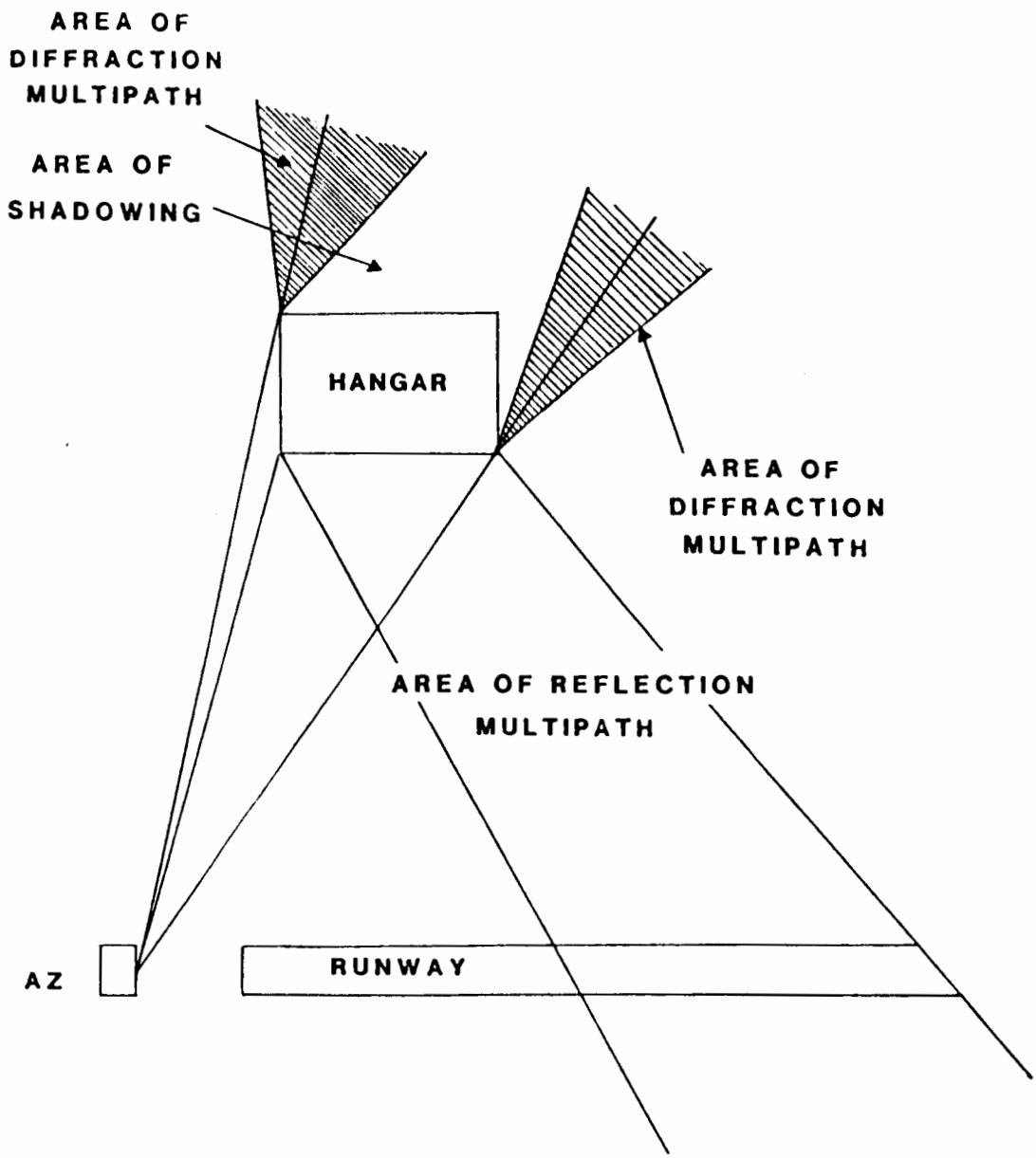

Figure 21. Shadowing and Diffraction Regions.

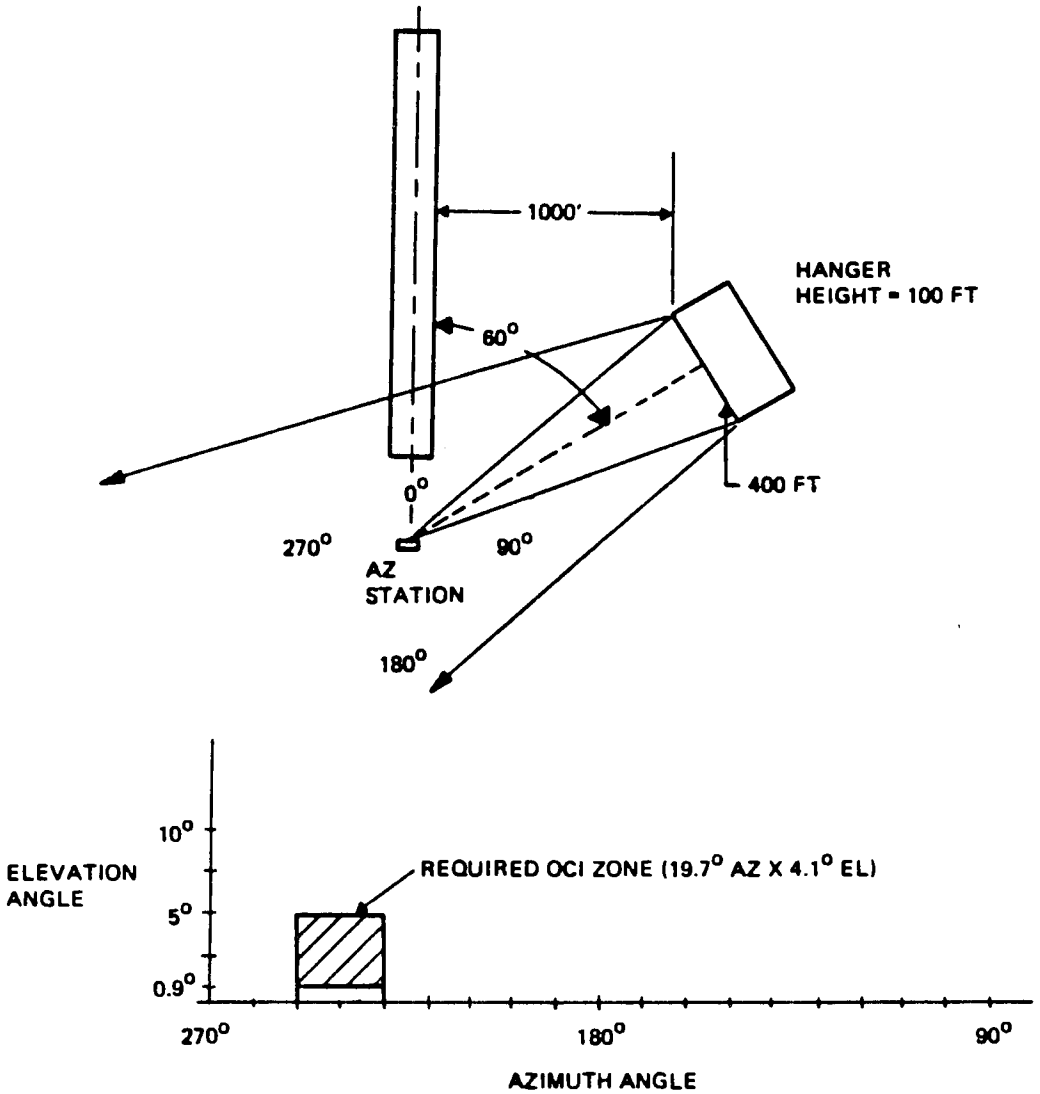

Figure 22. Typical Scenario Requiring OCI.

CHAPTER 5 SITING UNDER IDEAL CONDITIONS

1. OVERVIEW. One of the many advantages of MLS is its inherent resistance to multipath problems. This has been verified by numerous analytical studies, computer simulations, flight testing, and practical experience. Evans et.al., in a study of eleven major U.S. and foreign airports, found that over 50% of runway ends were free of buildings which could produce significant azimuth multipath when on final approach and 88% were free of buildings which would produce significant elevation multipath [9].

This chapter describes the procedures for locating the azimuth and elevation antennas for the simplest siting situation: a flat airport surface with no hills, buildings, or other obstacles within the guidance volume, and no ILS or approach light system present. Although this is not a typical situation, more complex siting problems generally involve a relatively simple correction or alteration of the criteria presented in this chapter. In Chapter 6, these more complex situations will be discussed along with an introduction to applications of the MLS computer model.

2. AZIMUTH SITE.

a. Antenna Location. The desired location for the azimuth station is on the extended runway centerline between 1000 and 1500 feet beyond the stop end of the runway (between points A and B in Figure 23). The distance from the stop end is influenced by the standard obstruction criteria and the necessity to protect the antenna from jet blast and oily deposits from the exhaust. The azimuth antenna is frangible, and could be located inside the safety area if necessary (see section d. in this chapter concerning obstacle clearance). However, all efforts should be made to site the antenna at a distance 1000 feet or greater from stop end, employing a tower if necessary.

All efforts should be made to site the azimuth antenna on the extended runway centerline. It has been estimated that, at most, only 5% of potential MLS sites at U.S. airports may require off-centerline siting [10] (This 5% estimate did not consider collocation with ILS or approach lights.). If centerline siting cannot be accomplished due to a hump in the runway which shadows the threshold area, lack of space, collocation with an ILS or approach lights, or unsuitable terrain beyond the end of the runway, the azimuth station should be located within the alternate siting area shown in Figure 23. The MLS azimuth antenna should not be offset sited if that runway end is served by a conventionally sited ILS localizer. FAA Order 8260.30A - IFR Approval of Microwave Landing System (MLS) describes a permitted offset approach procedure in which the zero degree guidance plane intersects the runway centerline at a point 1100 to 1200 feet toward the runway threshold from the Decision Height point on the minimum glide path offset course angle (alignment with runway centerline) not exceed three degrees. Possible locations for the MLS azimuth station providing an offset approach need to conform to the appropriate obstacle limitation surfaces, either the final approach surface or the transitional surfaces. The area for possible sites for an offset approach installation should be recorded if it is considered to provide a solution to a difficult siting problem [11].

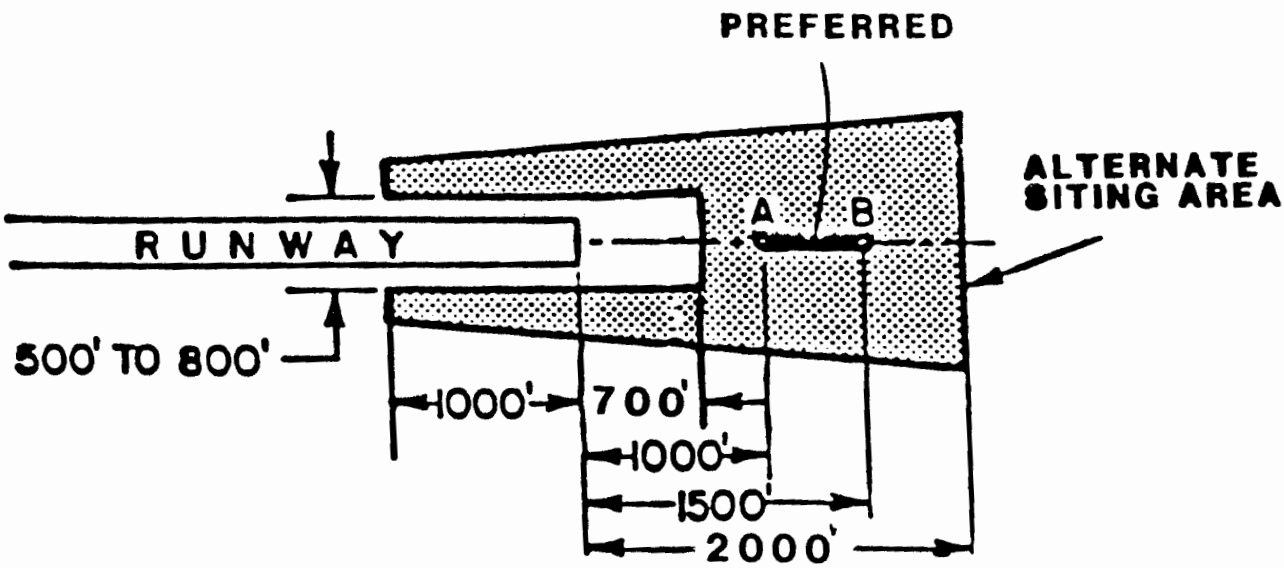

Figure 23. Preferred and Alternate Locations for Approach Azimuth Station.

Azimuth siting in the presence of an ILS localizer or approach light system is discussed in Chapter 6.

b. Critical Area. Analytical and experimental efforts are currently being conducted to define the azimuth and elevation critical areas. The azimuth system critical area depicted in Figure 24 was developed by simulating worst case conditions on the MLS computer model [12]. The antenna was assumed to be ground mounted, and the aircraft scatterer was a B747 oriented in such a way to give maximum signal disturbance. For each position of the simulated aircraft, a centerline, 3° approach was modeled and the maximum value of control motion noise (CMN) was recorded (regardless of the duration of the error). The critical area defined in Figure 24 is a region where the scatterer produced a peak CMN value equal to or greater than 50% of the error budget. Other, less conservative, criteria are being examined to determine their effect on the size of this critical area. These new criteria, based on the principle of allowing the path following error (PFE) and CMN to be out of tolerance no more than 5% of a specified length of time, will likely result in a smaller critical area. The length of the critical area in the direction of runway threshold is undefined at this time.

The azimuth critical area defined by the tenth meeting of the All Weather Operation Panel (AWOP) is also shown in Figure 25.

Care must be taken to protect the area between the azimuth antenna and its field monitor.

c. DME/P. The preferred location for the DME/P is at the azimuth site. However, this may cause the DME/P to violate obstacle clearance surfaces (Part 77) if the azimuth is site about 1400 feet or less from the stop end of the runway. The distance from the stop end is found by determining the necessary antenna height to insure adequate signal at ground level from Figure 26 [11], and checking to see if the 50:1 surface is violated for that particular antenna site. If so, the antenna may be moved further back (and its height readjusted) until it does not penetrate the 50:1 surface. The DME/P antenna may be also laterally offset in order to avoid penetration of surfaces.

d. Obstacle Clearance. Proper MLS siting is influenced by the necessity to meet obstacle clearance requirements. In addition to those requirements in the ground plane containing the runway, there are imaginary surfaces that rise at differing slopes from different points on the airdrome that may not be penetrated. For the case of azimuth siting, the relevant surface is the 50:1 approach surface. Its inner edge is 1000 feet wide and lies perpendicular to runway centerline 200 feet off the end of the runway. It then extends for a horizontal distance of 10000 feet at a slope of 50:1 and expands uniformly to a width of 16000 feet (see Figure 27) [13].

For an azimuth site 1000 feet off the runway end, this gives an allowable antenna height of 16 feet. Unless the antenna is mounted on a tower greater than 6 feet tall, the 50:1 surface will not be violated. However,

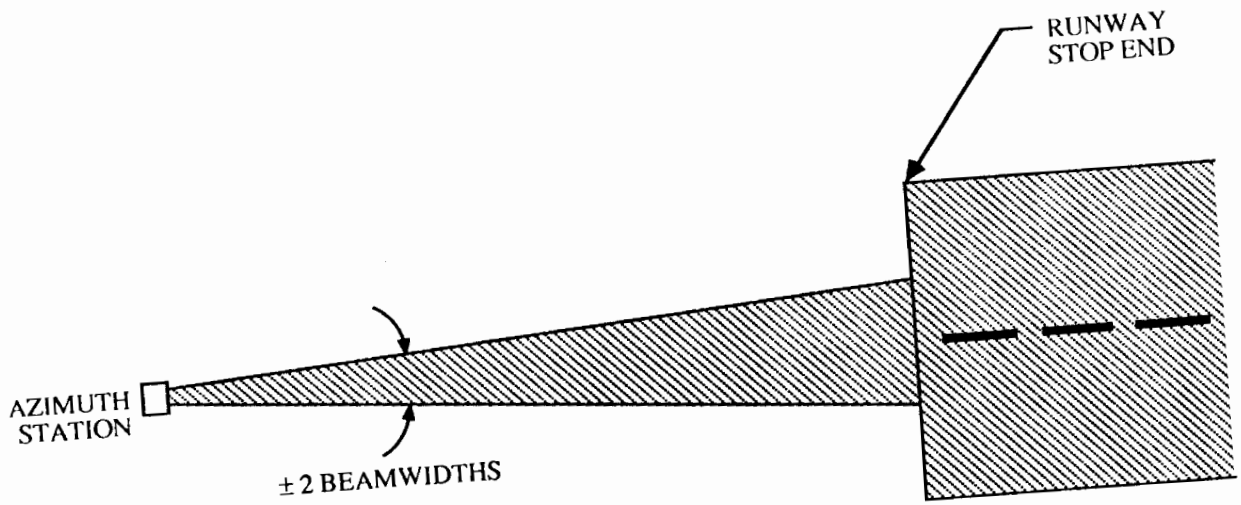

Figure 24. Azimuth System Critical Area.

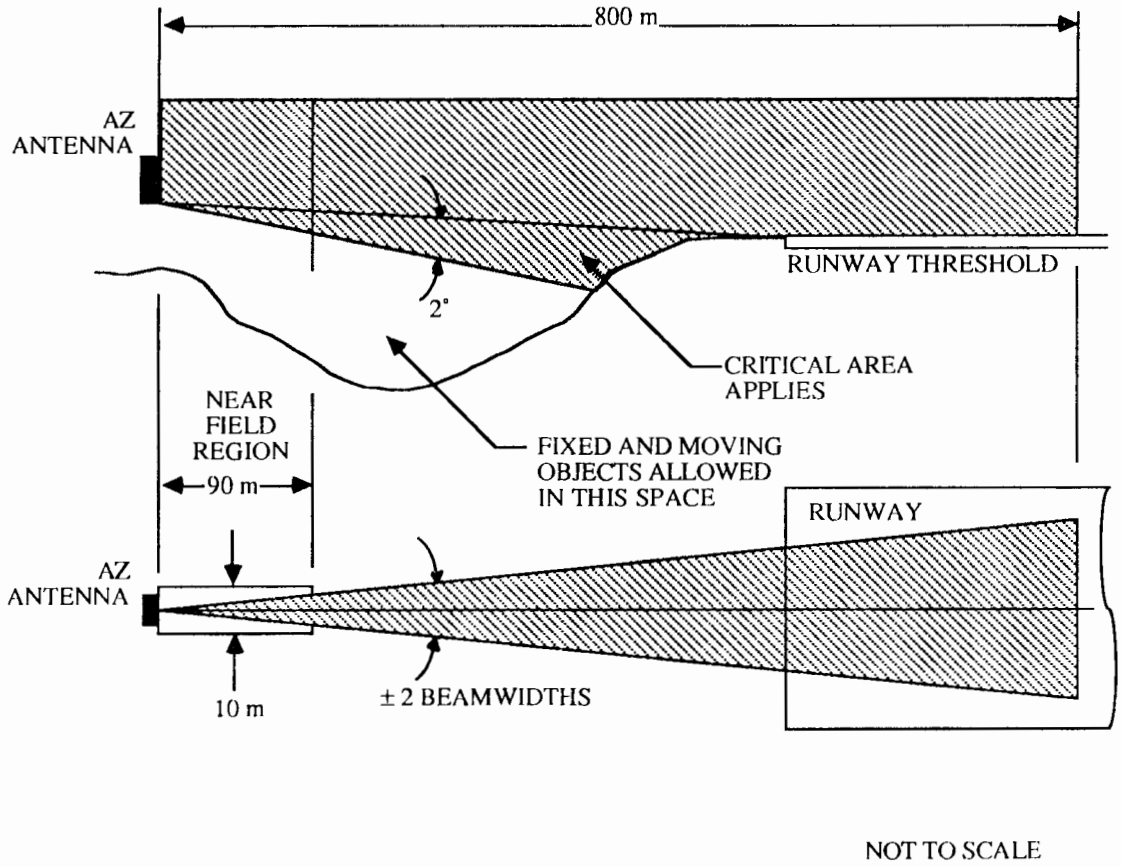

Figure 25. Azimuth System Critical Areas Suggested by AWOP -10 Meeting.

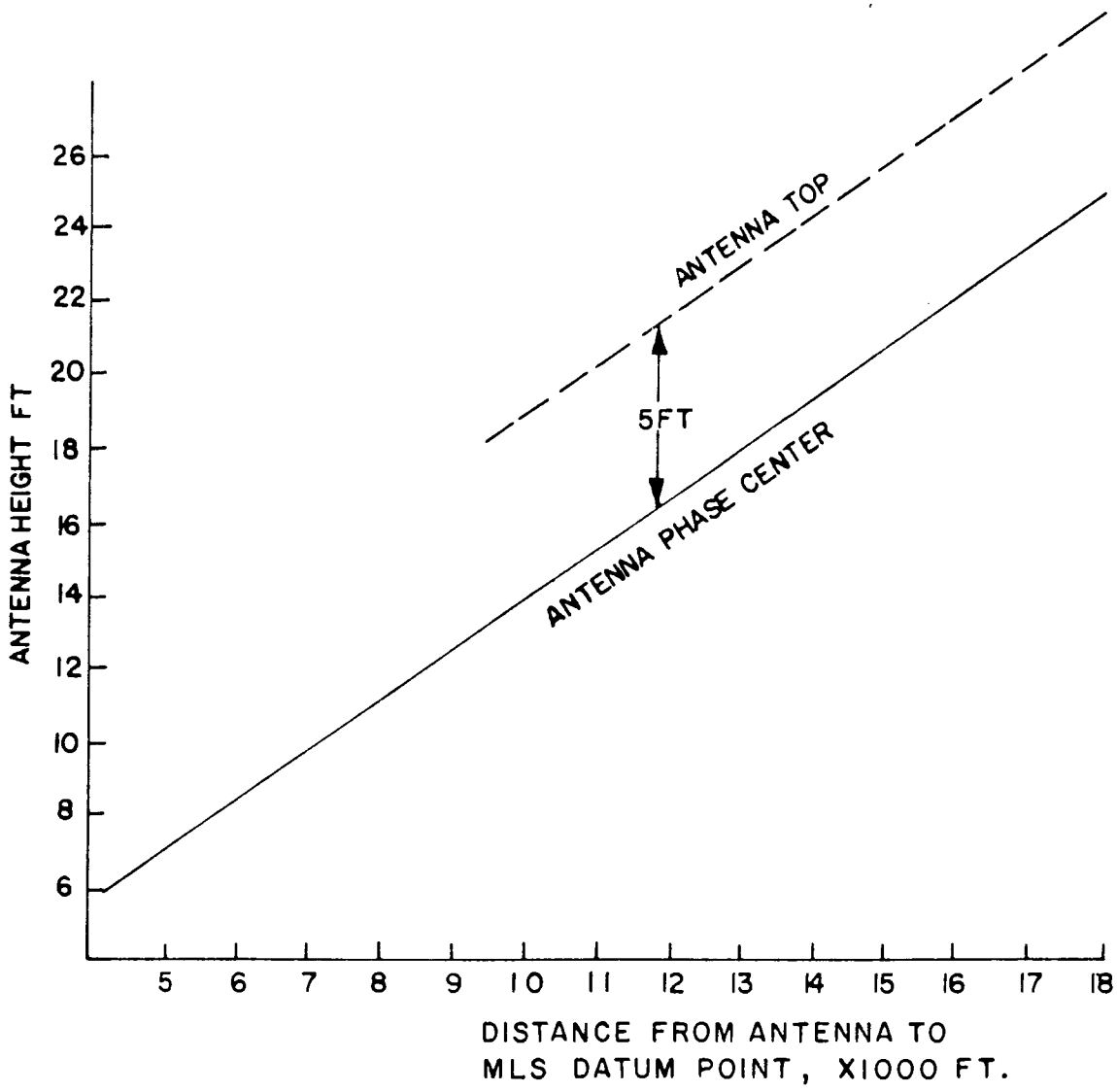

Figure 26. Relationship between DME/P Antenna Phase Center Height and Distance to Touchdown.

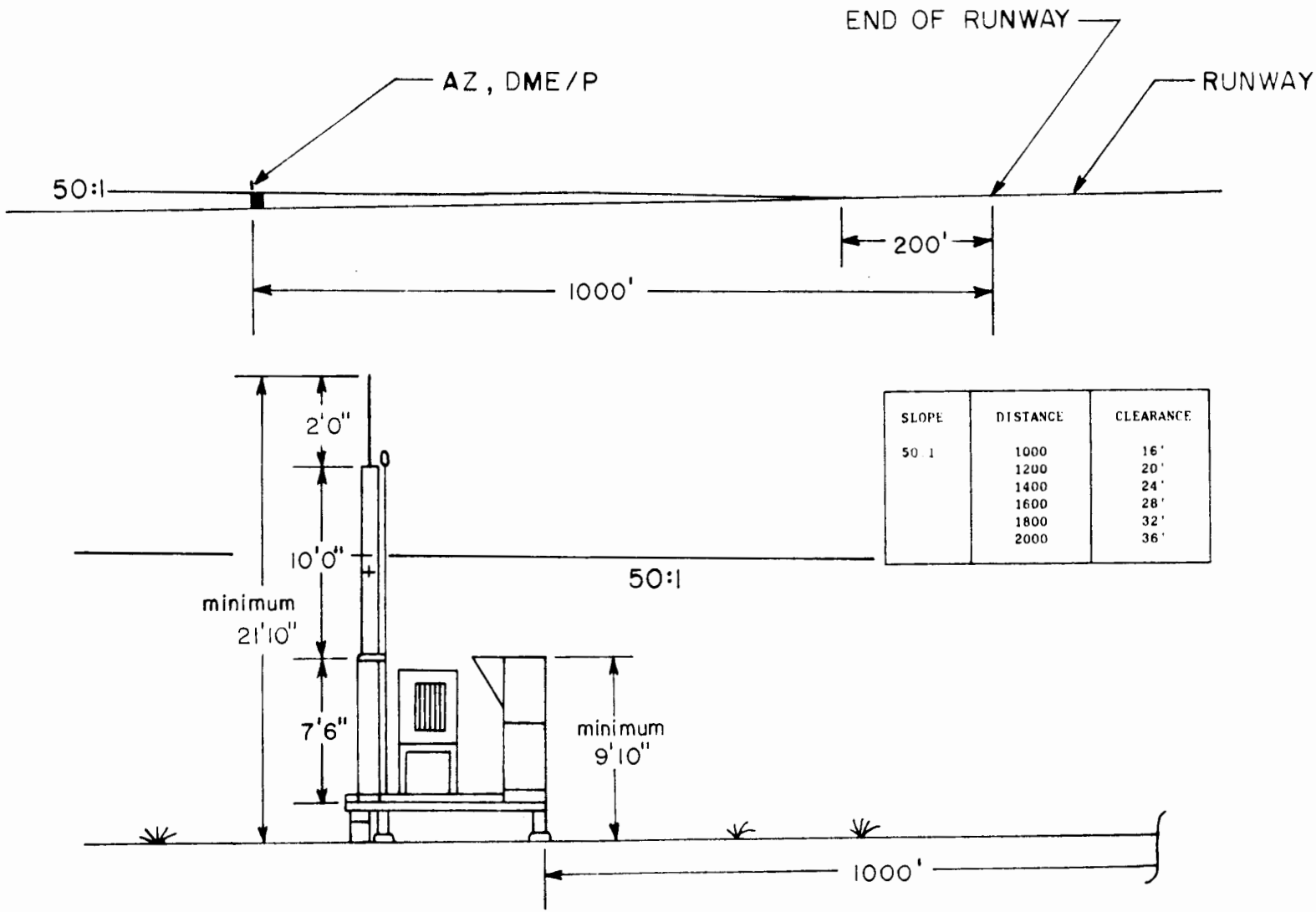

SLOPE	DISTANCE	CLEARANCE
50:1	1000	16'
	1200	20'
	1400	24'
	1600	28'
	1800	32'
	2000	36'

Figure 27. Azimuth Station Intersection with Part 77 Surfaces.

a collocated DME/P antenna having an overall height of about 22 feet (including lightning rod) requires an azimuth site setback of at least 1300 feet. Hence, it may be desirable to site the DME/P separate from the azimuth antenna to optimize azimuth siting. When siting separately, it may be possible to lower the DME/P antenna to clear the approach surface.

In general, obstruction standards specified in FAR Part 77, Subpart C shall be used to determine required obstruction clearance surfaces. If it is feasible to install an MLS azimuth antenna without penetrating an FAR Part 77 surface, do so. However, if the only feasible siting involves penetrating an FAR Part 77 surface, that siting does not require a waiver but does require airspace review and approval. In any case, siting an MLS component must not violate required obstruction clearance as specified in the latest edition of Handbook 8260.3, United States Standards for Terminal Instrument Procedures (TERPS).

3. ELEVATION SITE.

a. Antenna Location. The elevation antenna is nominally located 255 feet from runway centerline, on either side of the runway. To choose the proper side of the runway to site the antenna, the siting engineer must consider the space available, the presence of active taxiways, and potential signal multipath and shadowing problems. The antenna phase center should be higher than the elevation of the runway, and the bottom of the antenna aperture should be higher than three feet above ground level to provide snow clearance.

The MLS approach reference datum is a point at a specified height located vertically above the intersection of the runway centerline and the threshold. The minimum glide path angle and the height of the approach reference datum will be determined by FAA Regional Flight Standards Personnel prior to siting the ground equipment. FAA Order 8260.34 (Glideslope Threshold Crossing Height Requirements) governs the selection of the height of the approach reference datum. Factors that will be considered in determining these two siting variables are: type of operations (analogous to ILS Category I, II, or III), categories of aircraft utilizing the runway and their desired wheel crossing height, and length of runway.

The MLS elevation antenna provides conical coordinates and, thus, MLS glide paths are hyperbolas rather than straight lines. The elevation antenna should be sited so that the asymptote of the minimum glide path crosses the threshold at the MLS approach reference datum. There is a difference in height between the planar glide path (asymptote to minimum glide path) and hyperbolic glide paths at threshold; operationally it is desirable to minimize this difference. Figure 28 plots the hyperbolic glide paths for an elevation antenna sited to provide a 3° planar glide path for various antenna offsets. Thus, minimizing this difference is accomplished by siting the antenna as close to the runway centerline as possible. The relatively short height of the MLS elevation antenna will allow siting the antenna 255 feet from runway centerline ('offset' equals 255 feet).

Once the minimum glide path angle and the height of the approach reference datum are established, the location of the antenna may be determined in the

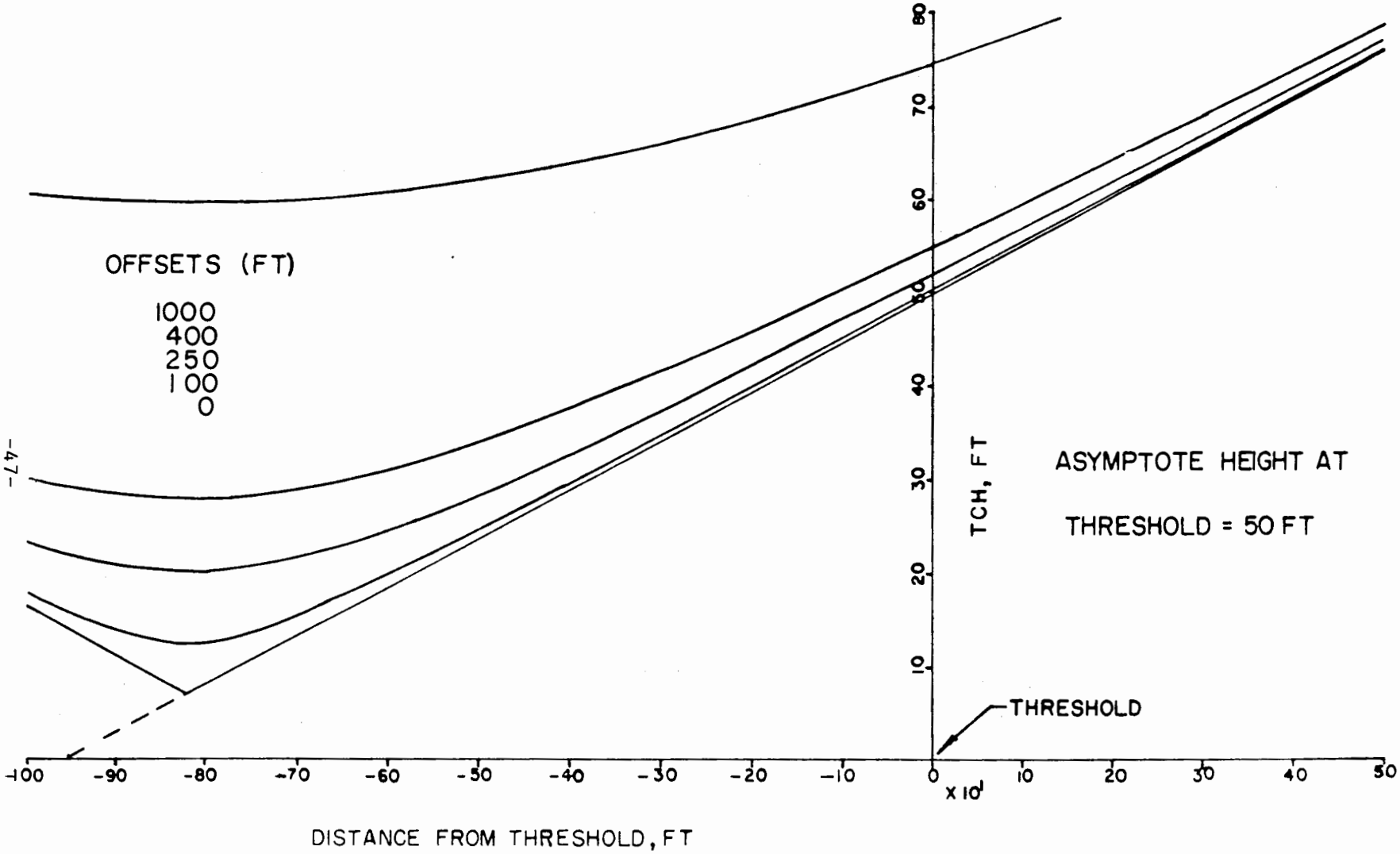

Figure 28. MLS 3-Degree Glide Paths and the Linear Asymptote for Various Antenna Offsets from Runway Centerline.

following manner. As shown in Figure 29, the setback distance (SB) is calculated using the approach reference datum height (H), the antenna phase center height (PCH), and the tangent of the minimum glide path angle (θ). The next computation determines the hyperbolic glide path height at the threshold (HYBH). This should then be compared with the height of the asymptote of the minimum glide path (H). This difference (HDIF) should be kept to a minimum as previously stated. If this difference exceeds 10 feet it could present an operational problem, and alternative siting should be explored. Figure 30 gives the location of the siting area which achieves a planar glide path crossing height (asymptote to hyperbolic glide path) of at least 50 feet while keeping the hyperbolic path crossing height no greater than 60 feet (a phase center height of 7 feet and a 3° glide path was assumed).

If the elevation antenna is to be collocated with an existing ILS glide slope antenna, the governing rules are given in Chapter 6.

b. Critical Area. All comments concerning criteria for determining the azimuth system critical area, including the discussion concerning on-going work, also apply for the elevation system. Figures 31 and 32 define the critical area for the 1 degree elevation antenna, and Figures 33 and 34 apply for the 1.5 degree system. The AWOP critical area estimate is also given in Figure 35.

c. Obstacle Clearance. Figure 36 depicts the transitional surfaces pertinent to elevation antenna siting [13]. No part of the elevation antenna may be closer than 250 feet to runway centerline so as not to violate the runway safety area. This optimum offset of 250 feet clearly violates the primary surface and the 7:1 transitional surface; however, there exists an exception which allows navigational aids to be sited in violation of Part 77 surfaces if the location is justified by the fact that the aid will not operate effectively elsewhere. The heights of the 1°, 1.5°, and 2° elevation antennas are such that neither violates the 3:1 or inner transitional surface with an offset of 255 feet. Some elevation antenna designs are not frangible.

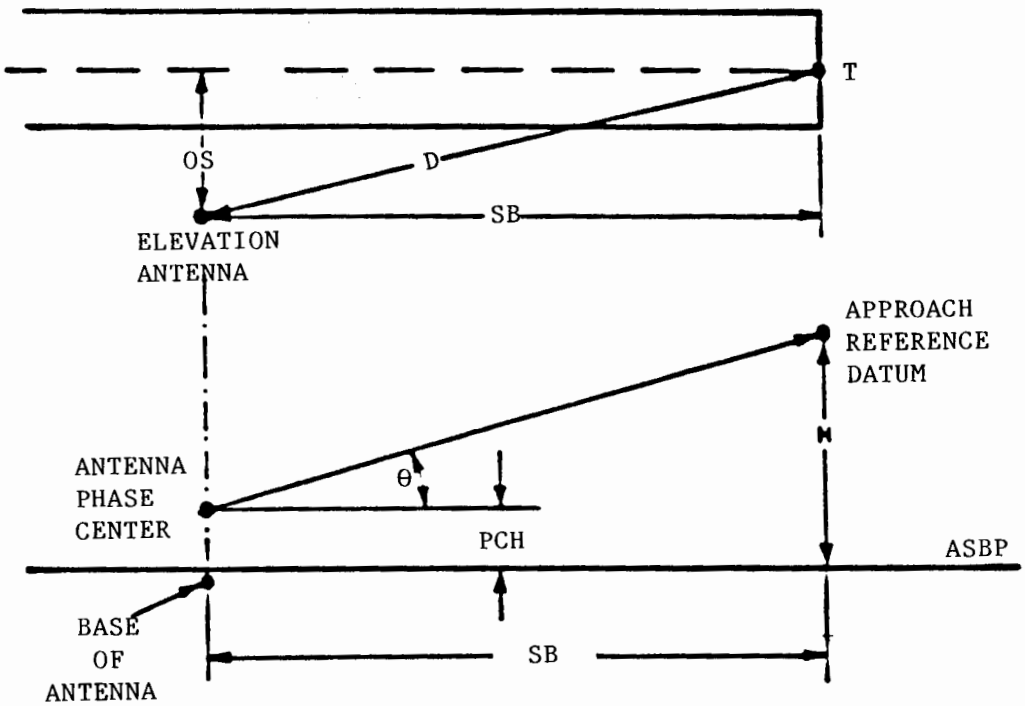

KNOWN: OS, θ, H, PCH

FIND: SB

$$SB = \frac{H - PCH}{TAN}$$

FIND: HYBH, HDIF

$$D = \sqrt{SB^2 + OS^2}$$

$$HYBH = D(TAN\ \theta) + PCH$$

$$HDIF = HYBH - H$$

Figure 29. Computation of Elevation Site Coordinates.

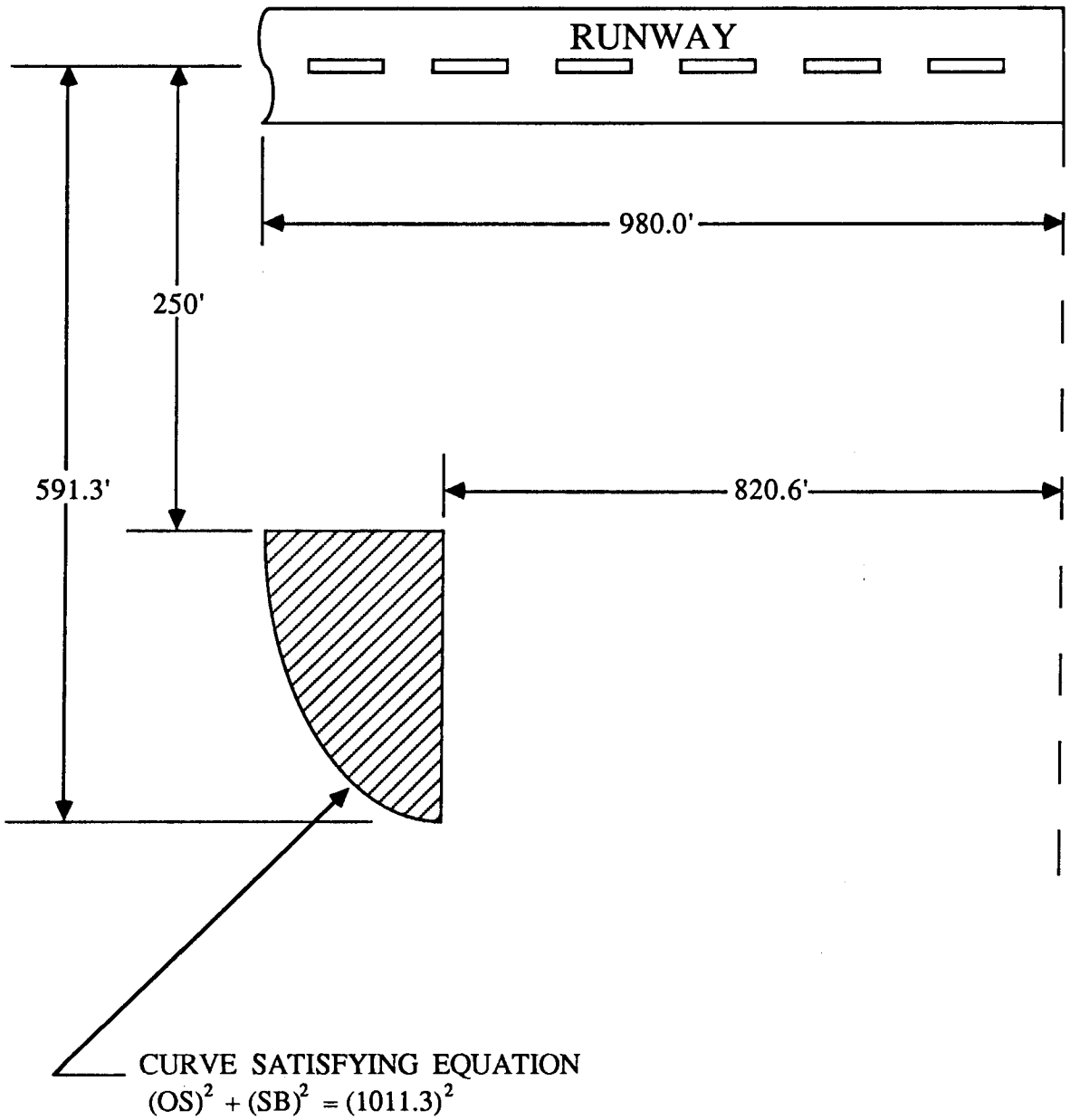

Figure 30. Elevation Siting Area Which Yields a Planar Glide Path of at Least 50 Feet While Keeping the Hyperbolic Path Crossing Height Less Than 60 Feet.

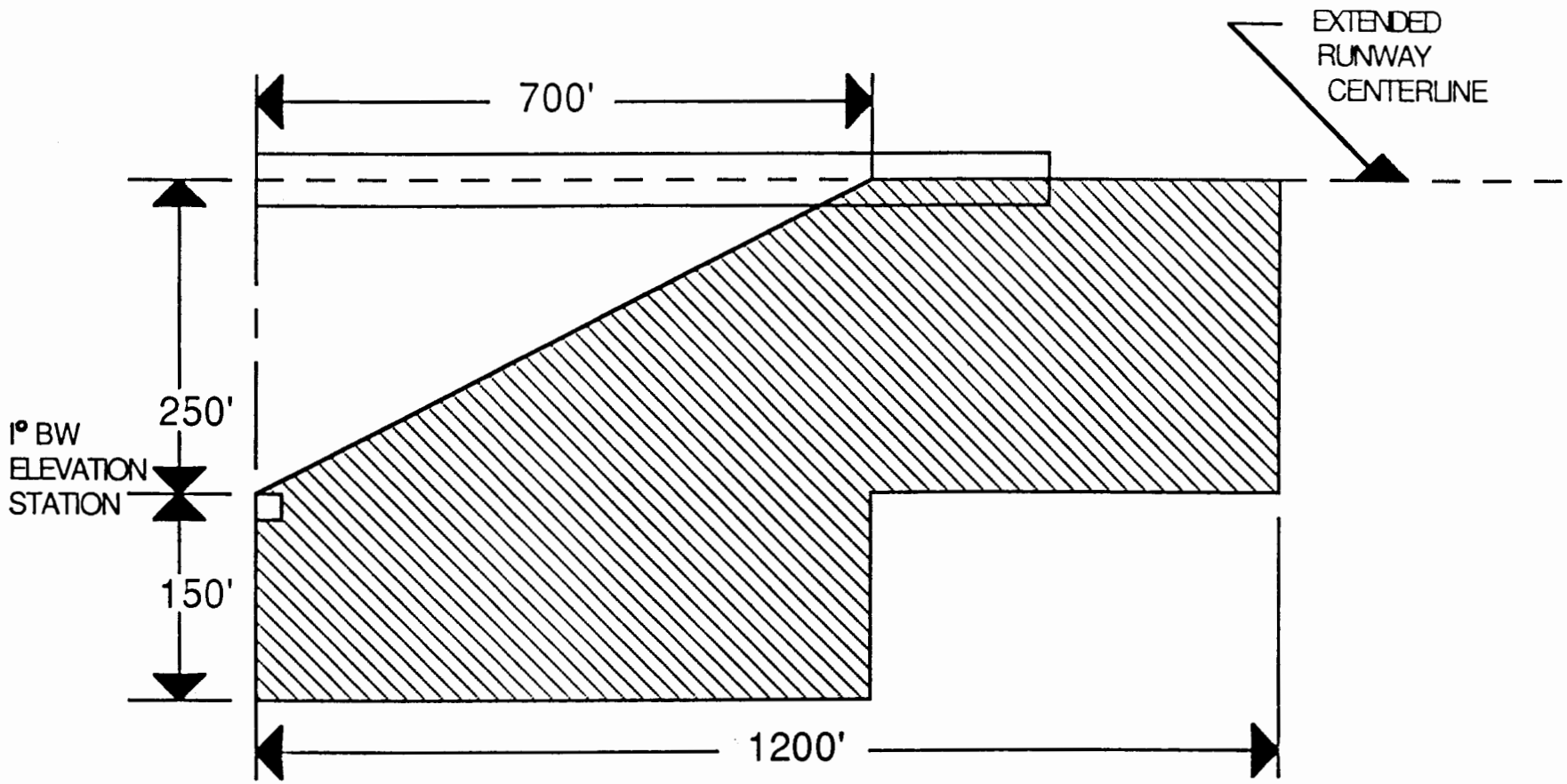

Figure 31. Elevation Site Critical Area for a 1° Beamwidth Antenna (Plan View).

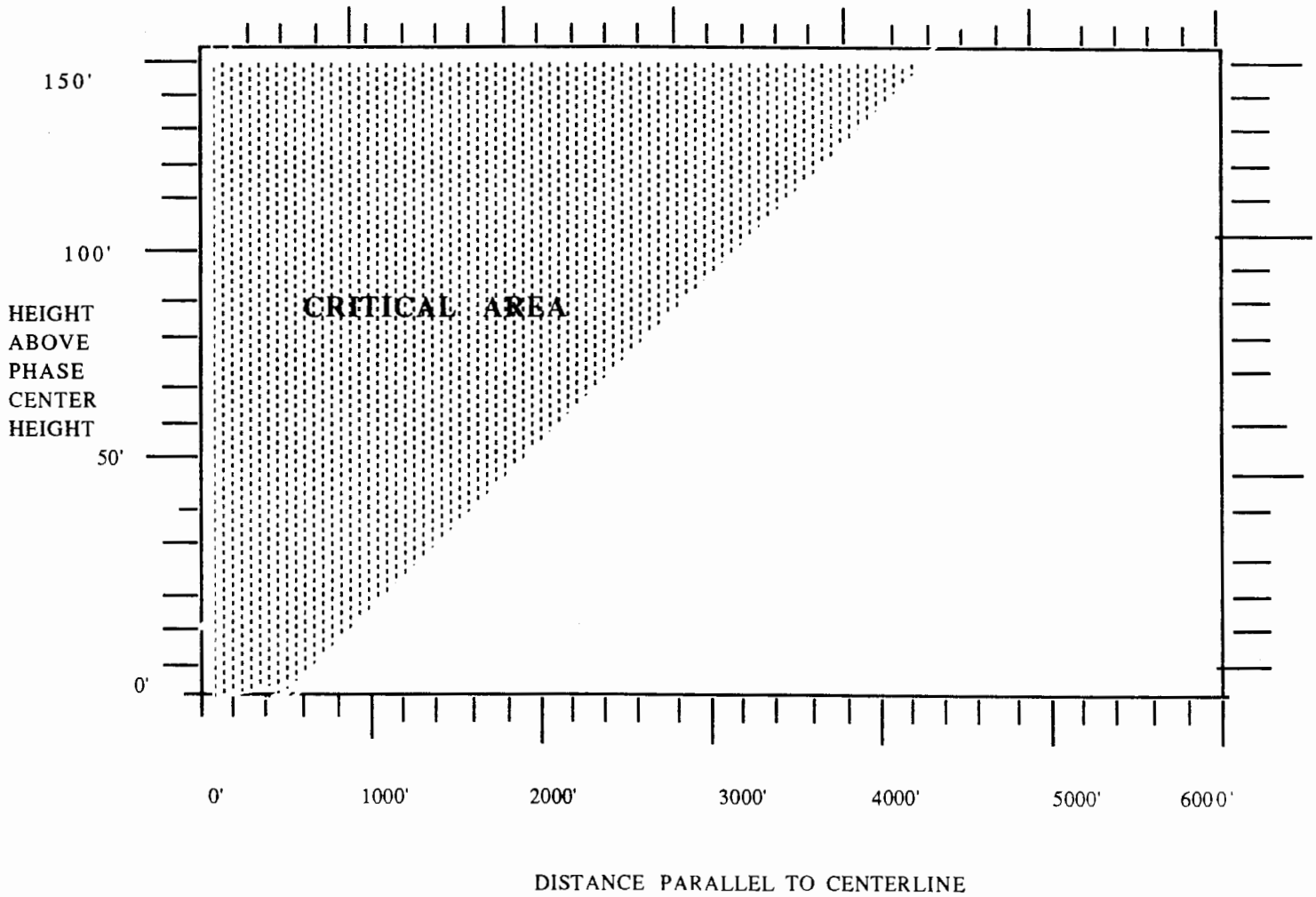

Figure 32. Elevation Site Critical Area for a 1° Beamwidth Antenna (Elevation View).

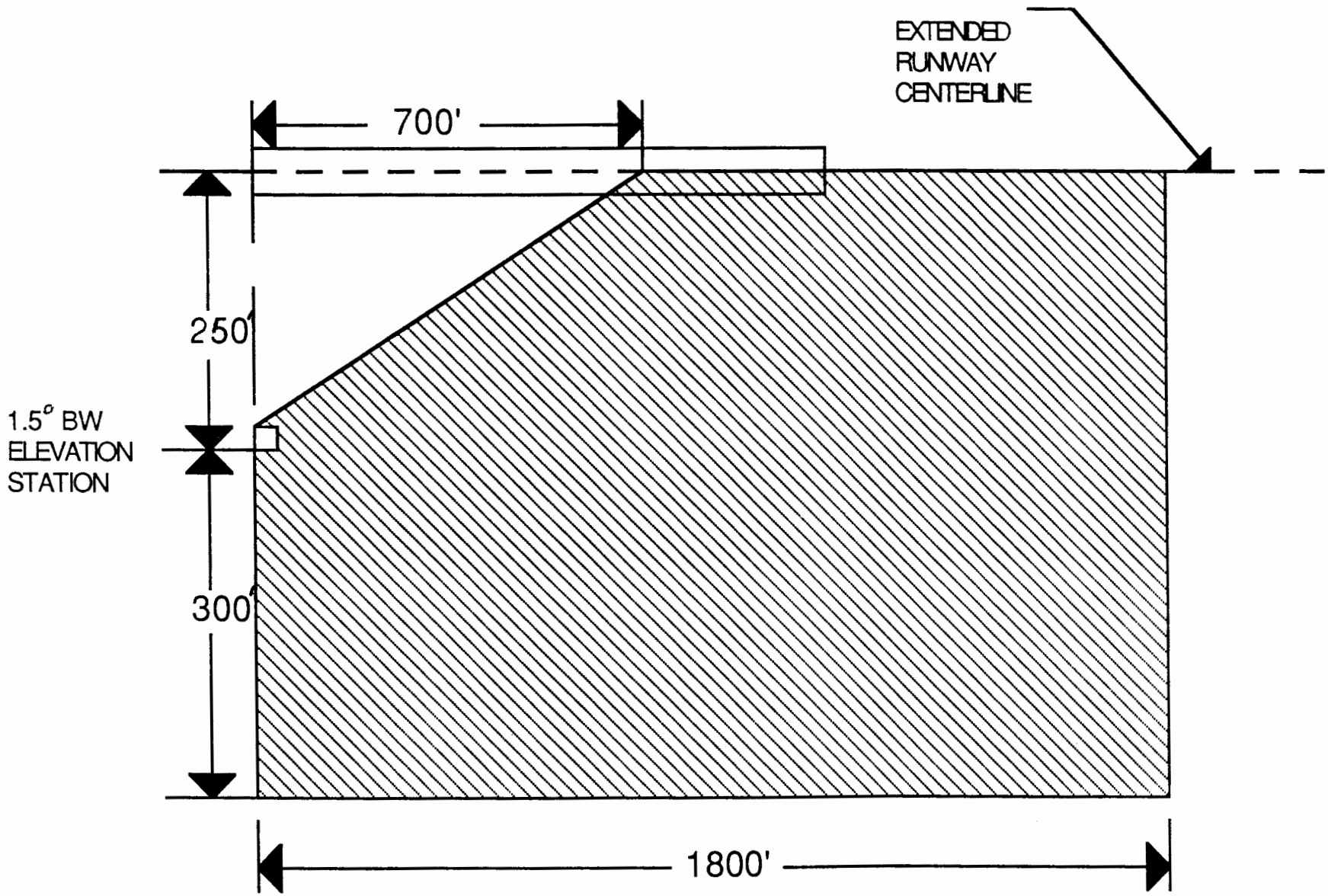

Figure 33. Elevation Site Critical Area for a 1.5° Beamwidth Antenna (Plan View).

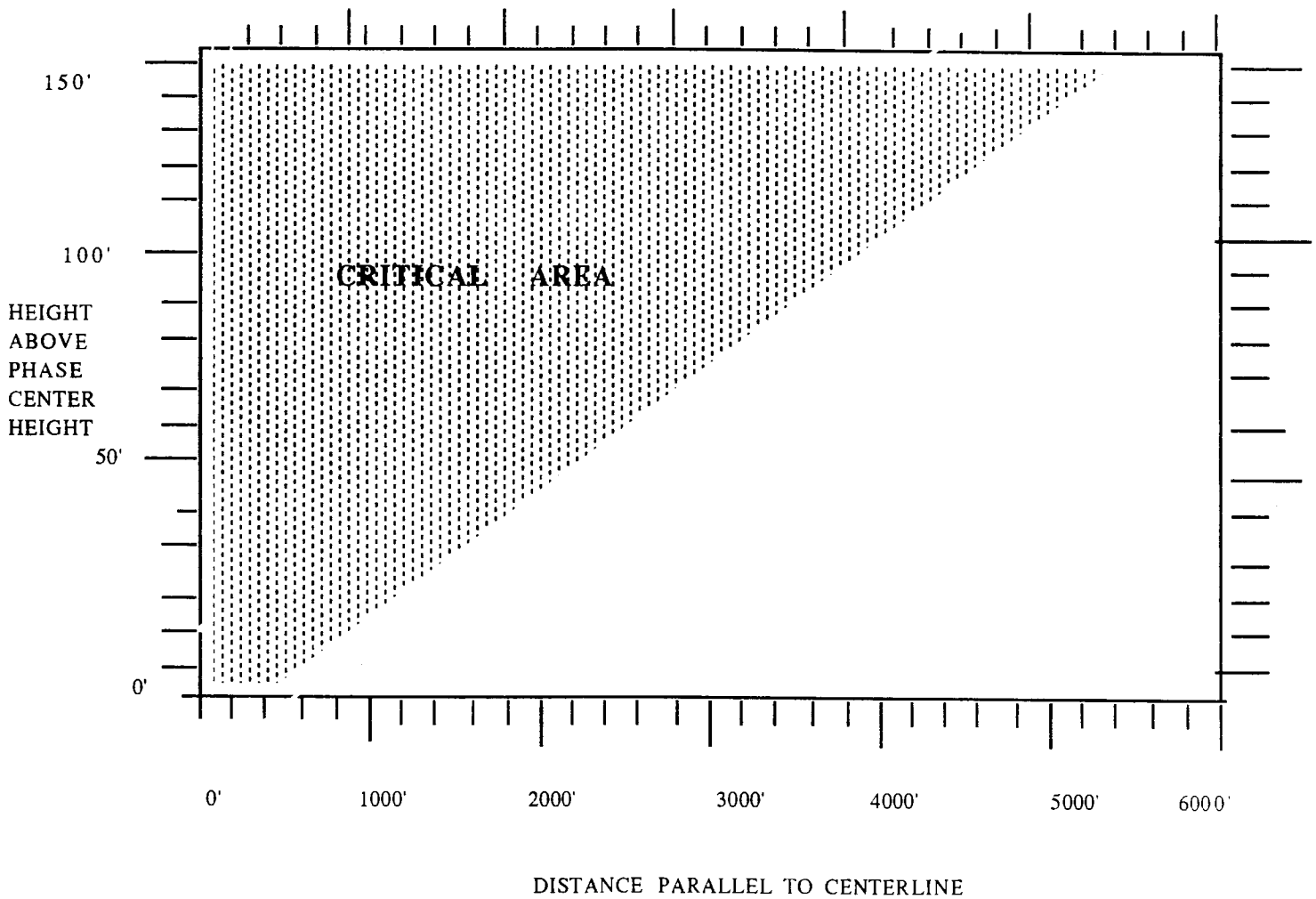

Figure 34. Elevation Site Critical Area for a 1.5° Beamwidth Antenna (Elevation View).

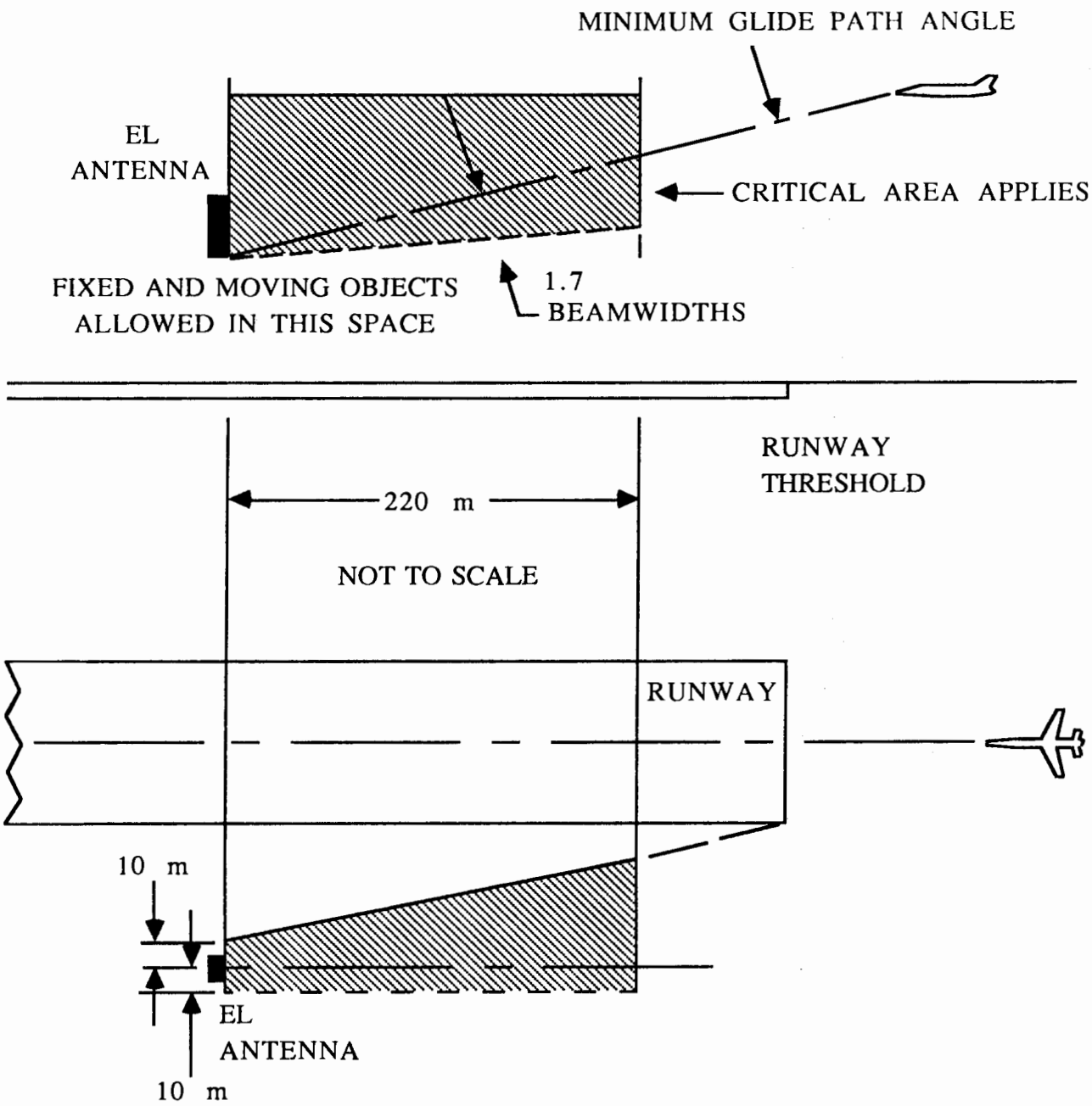

Figure 35. Elevation System Critical Areas Suggested by AWOP -10 Meeting.

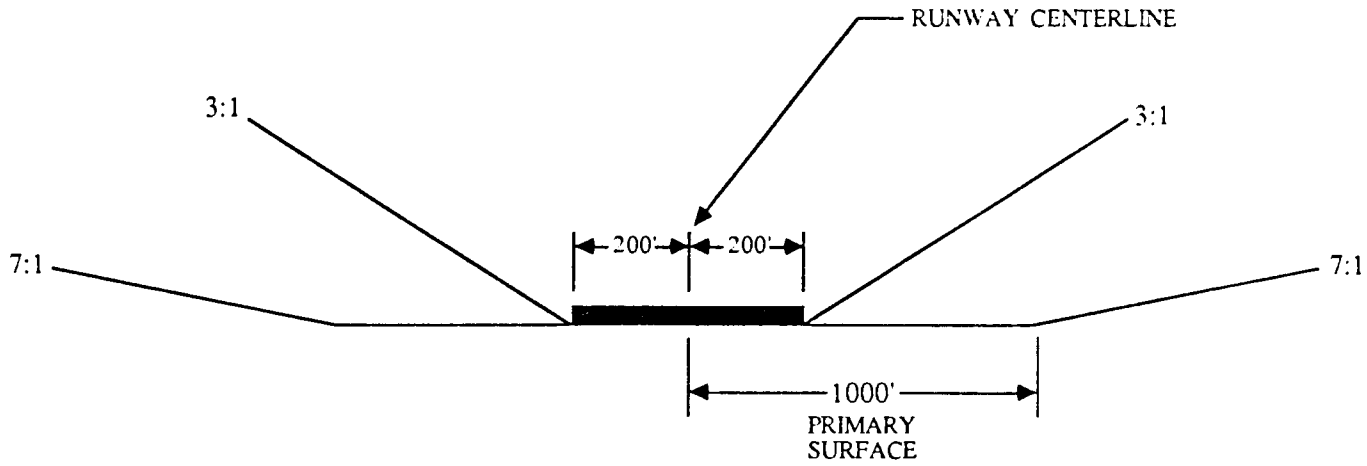

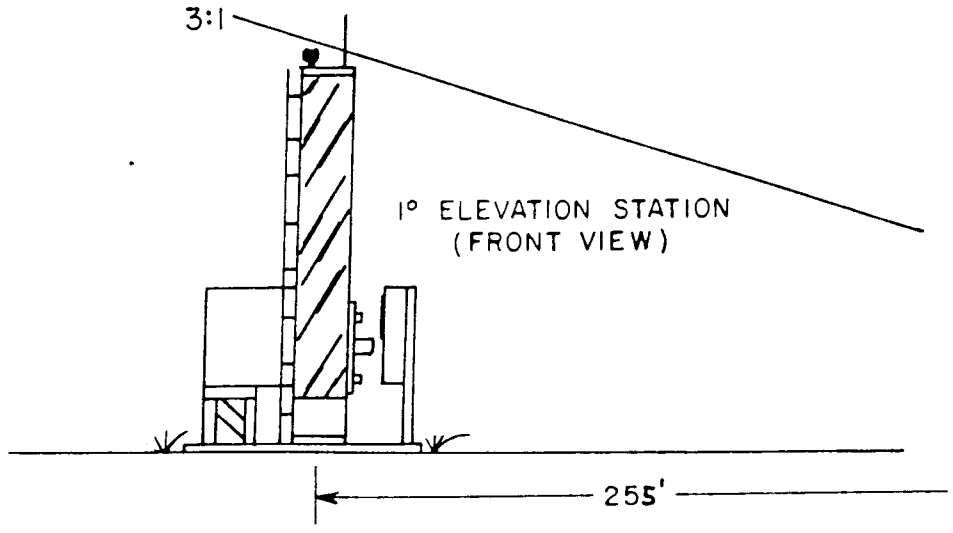

Figure 36. Transitional Surfaces.

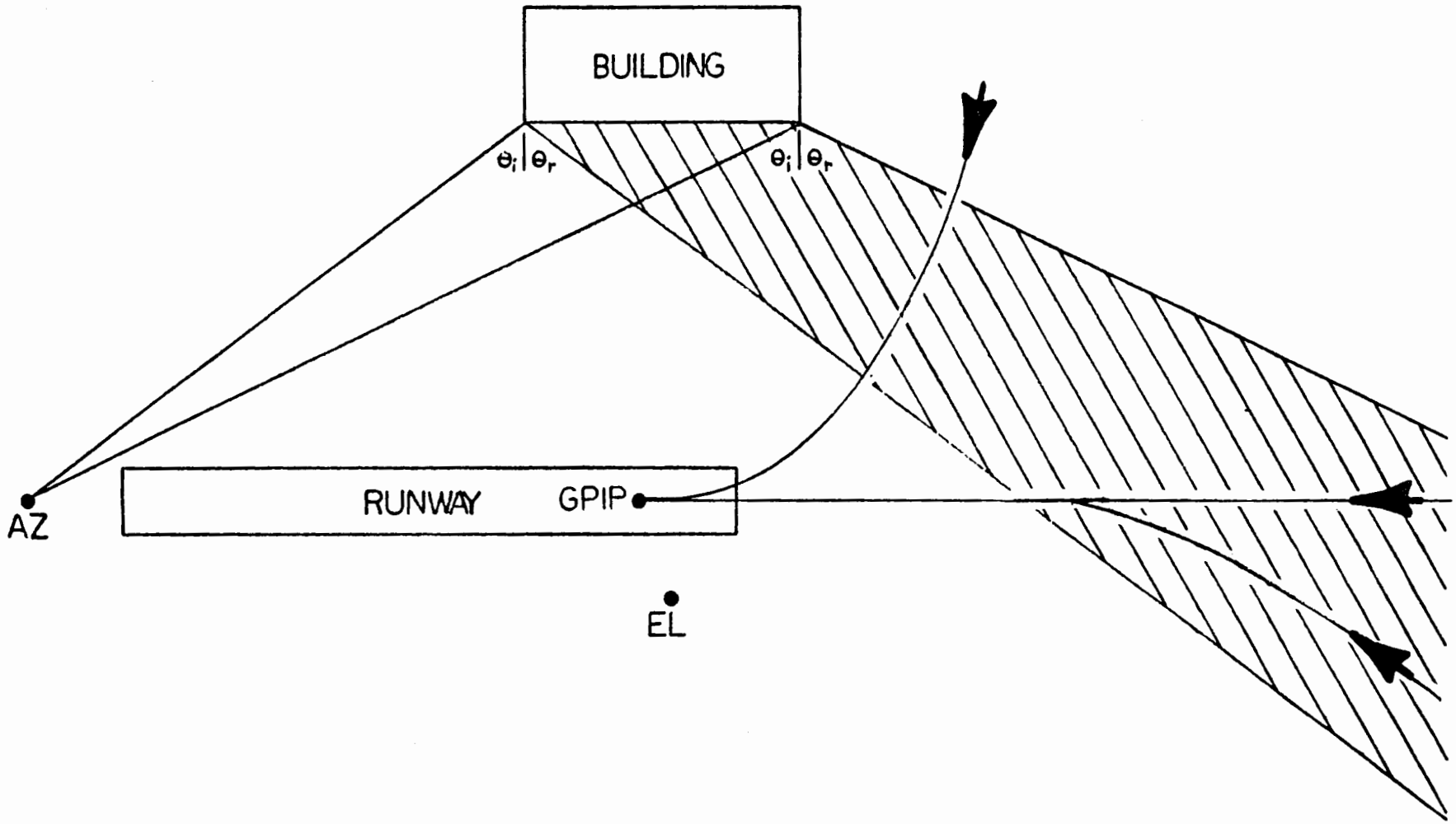

Figure 37. Ray Tracing to Determine Multipath Region (Plan View).

CHAPTER 6 SPECIFIC SITING CONCERNS

1. OVERVIEW. This chapter discusses methods of analysis and techniques to deal with multipath and shadowing problems, as well as criteria for collocation with ILS and approach light lanes. Where situations that are beyond the scope of this discussion are encountered, it is recommended that the MLS Program Office, APM-410, be consulted.

2. AZIMUTH STATION.

a. Multipath. Any objects in line-of-sight of the azimuth antenna and within the guidance region are potential multipath sources. Since the wavelength at the MLS frequency is about 2 inches, almost any concrete or metal surface will reflect, diffract, or shadow the MLS scanning beam. Smaller reflecting objects can cause narrow bursts of multipath as the receiver moves through the approach zone, but since the receiver is designed with acquisition and validation circuits to acquire the strongest and most persistent signal, the MLS will resist these bursts of short duration [1].

The real multipath threat is from large buildings (such as hangars, control towers, etc.) and hillsides. These large obstacles can reflect the scanning beam over a wide volume. However, the potential for guidance error exists only when the approach path passes through the multipath-affected region of space and the "separation angle" between the approach path and the reflecting surface is 1.7 beamwidths or less. This "separation angle" is the coding angle between the direct approach path and the obstacle as viewed in the plane perpendicular to the plane of the scanning beam. When this criterion is satisfied, the magnitude of guidance error is still a function of several factors, including the reflecting properties of the offending surface.

The bounds of the multipath-affected region of space may be determined by ray tracing. Figure 37 shows the plan view of a building which is acting as a reflector for the azimuth scanning beam. A "ray" is drawn from the azimuth antenna phase center to the extremities of the object; in this case, the corners of the building. The rays form an angle (θ_i) with respect to a perpendicular to the surface at that point. Then the reflected ray is drawn such that the angle between the reflected ray and the perpendicular (θ_r) is equal to θ_i. This yields the region of space in the plane parallel to the airport surface that contains the multipath disturbance. The vertical bounds of this region may be found by repeating this process for the elevation view (Figure 38).

Hence, for a given approach path, multipath-induced guidance error is possible if the path traverses this region and, at the same time, the separation angle is 1.7 beamwidths or less. It should be noted that a diffracted signal will exist on either side of the bounds of this region.

To give the siting engineer a quantitative feel for the type of situation that warrants concern about multipath, computations were performed using the MLS computer model. A perfectly reflecting building face of dimensions

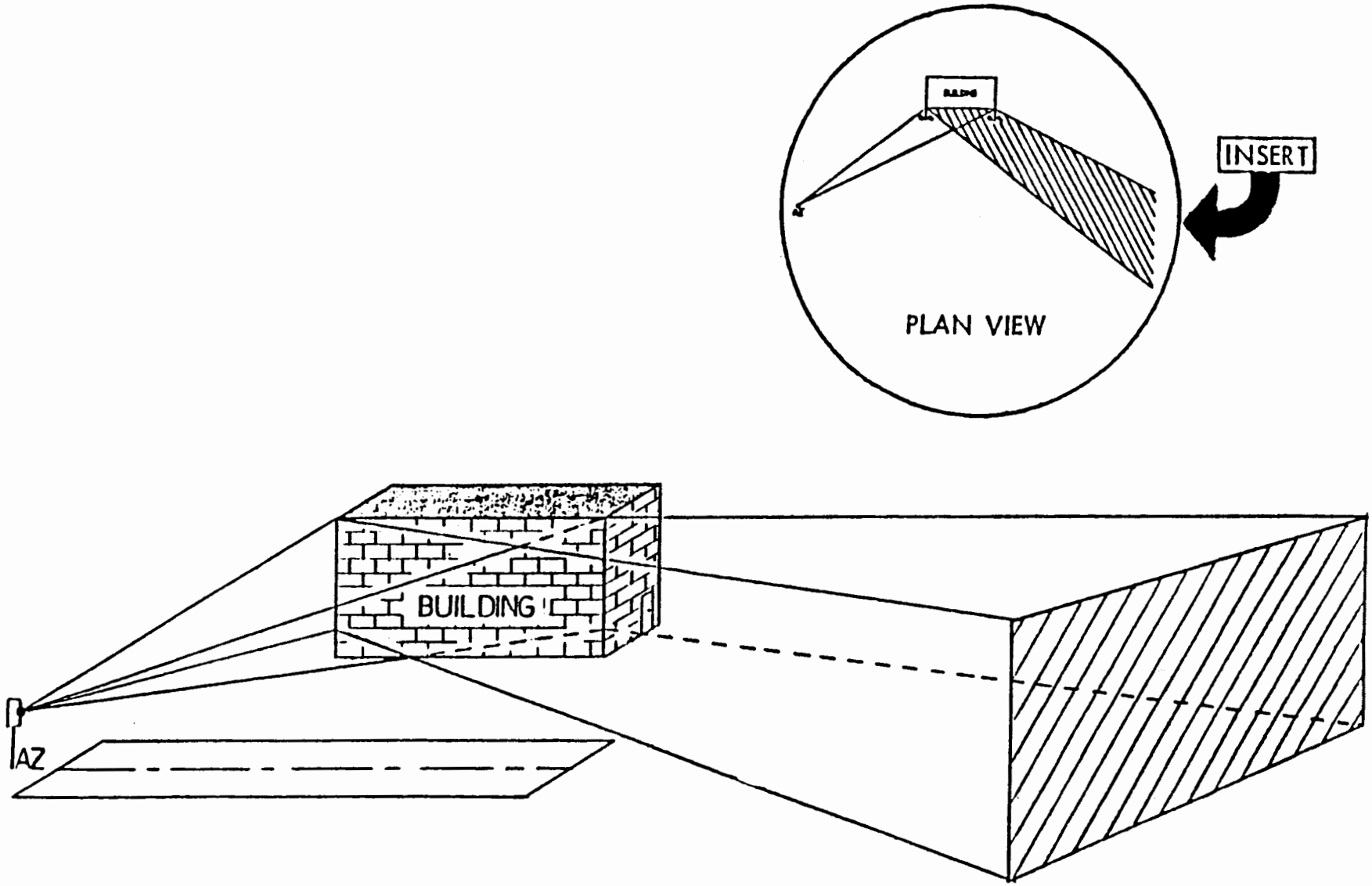

Figure 38. Ray Tracing to Determine Multipath Region (Elevation View of Insert).

500' by 60' was placed alongside the runway and the control motion noise (CMN) was calculated as a function of aircraft position for a 3° centerline approach (A beamwidth of 3° was chosen to better illustrate the concepts.). For a given building location, the largest CMN value was recorded; this procedure was followed many times as the building was moved about various points on a grid, using the model. The result is the contour map in Figure 39 which represents the peak CMN value induced by the 500' x 60' building face centered at that location alongside the runway (The path following errors were too small to yield a meaningful contour map.). Note that the induced errors are small when the building lies out-of-beam, but they increase as the building is placed closer to the runway and the multipath is in-beam, as evidenced by the steep contours at locations near 2500 feet from the stop end.

For comparison purposes, the same procedure is repeated in Figure 40 using a 1000' x 100' building. The larger reflecting surface obviously induces larger CMN errors, some of which are quite significant.

Thus, if a large reflecting obstacle lies within line-of-sight of the azimuth antenna inside the guidance volume, take the following steps:

- trace rays to determine the bounds of the multipath affected region. Given this and the approach path geometry, determine whether the multipath is in-beam (separation angle 1.7 beamwidths or less).

- if in-beam, and from a large structure, it may be advisable to use the MLS computer model to estimate the magnitude of the disturbance to help determine if a more narrow beamwidth should be used. The model indicates that buildings 100 feet wide can cause significant error (.04° CMN and .02° PFE) if the multipath is in-beam.

b. Shadowing. The performance of MLS in a region which is shadowed depends upon many factors including the geometry of the situation and the time elasped during the absence of the signal.

In the case where the signal is completely blocked, the receiver should coast through the interruption for time periods up to 1 second.

However, usually there is not a complete absence of a signal, but there exists an attenuated diffracted signal. Sufficient signal-to-noise ratio margins have been designed into the system so that MLS receivers are usually sensitive enough to acquire this diffracted signal. In the case of azimuth shadowing, if the discontinuity (or diffracting edge) of the shadowing object runs horizontally (the top of a building, for example), the separation angle is zero and there will be no guidance error as long as the diffracted signal is strong enough to be acquired. If the diffracting edge is vertical, the error can be large.

If there exists a multipath signal reflected from another obstacle within the shadowed region, the guidance error depends upon the acquisition history. If the receiver has been tracking the signal for more than 20 seconds before attenuation, the multipath will have no effect for at least

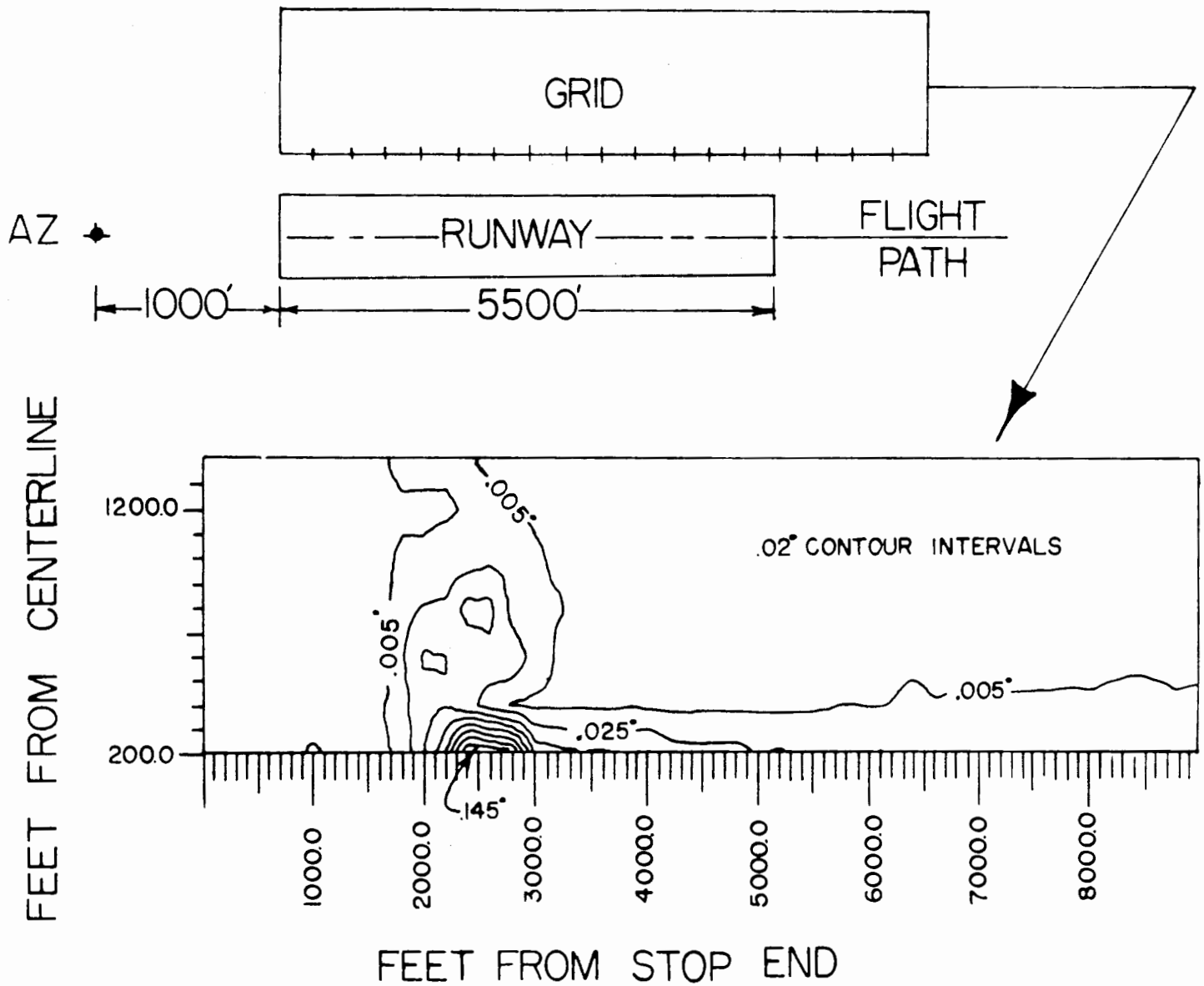

Figure 39. Contour Map of Peak CMN Induced by a 500' x 60' Building.

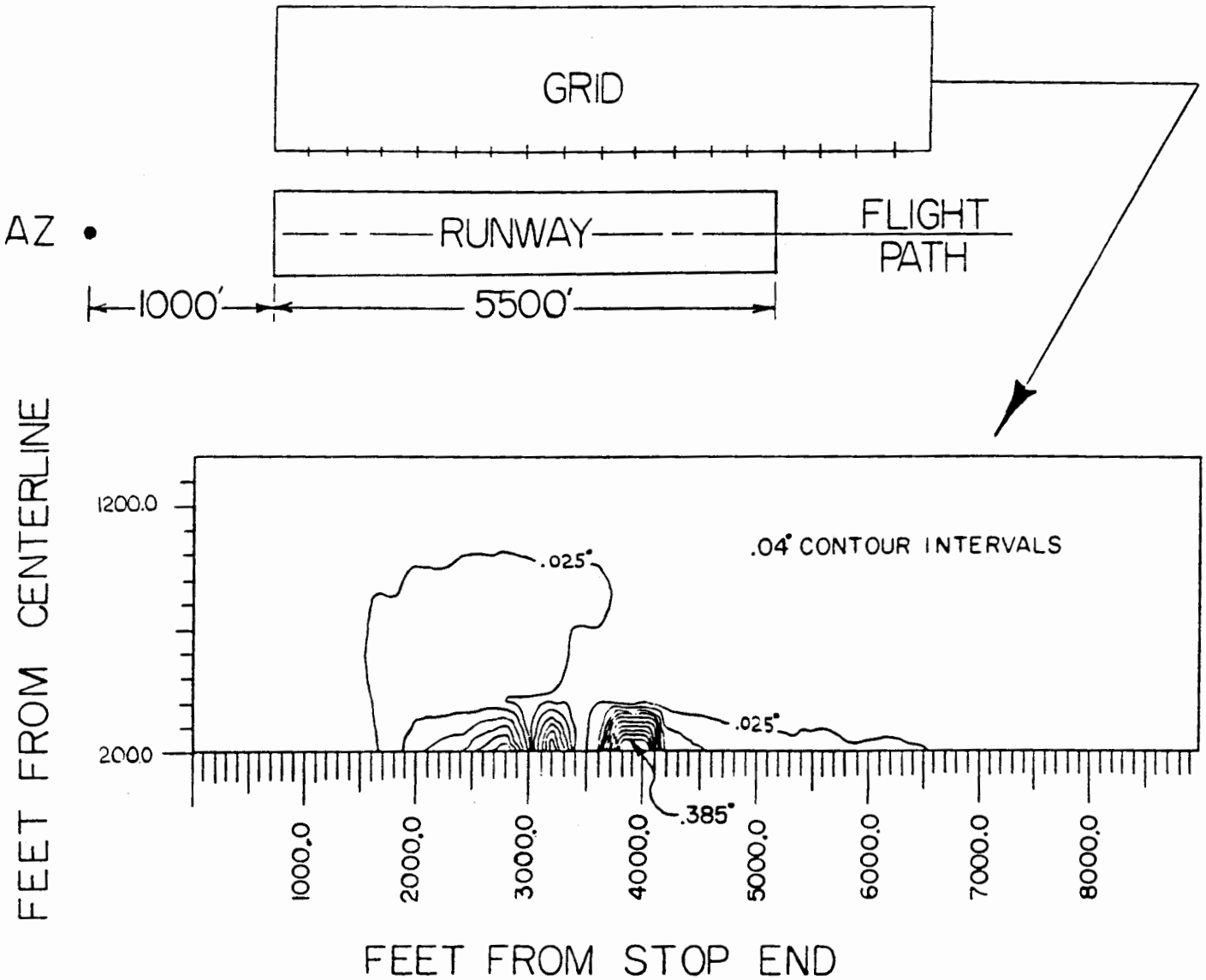

Figure 40. Contour Map of Peak CMN Induced by a 1000' x 100' Building.

10-20 seconds [1]. If there is no track history, the receiver may lock on to the multipath signal and cause large errors. This has been demonstrated in a situation where the direct signal was shadowed by a grove of trees and the receiver acquired the multipath signal reflected from a building. Scan limiting may remedy this situation, or the approach paths can be established above the shadowed region.

In addition to buildings and terrain, humped runways may cause shadowing, particularly near the critical threshold region. As shown in Figure 41, the hump blocks the line-of-sight between the azimuth phase center and the point eight feet above threshold. The signal below line-of-sight is the signal diffracted over the hump. Although the separation angle is zero, the magnitude of the signal may be reduced significantly. The question of whether there is still sufficient signal level for proper receiver operation is dependent on hump geometry. The MLS computer model may be helpful in deciding whether a runway hump mandates raising the azimuth antenna.

Hence, is it important to identify regions of space in which the direct signal is shadowed. This is most effectively done using a phototheodolite placed at the azimuth site under consideration. A skyline survey should be taken through 360 degrees to record site details including angle and distance of skyline and to identify areas in which azimuth coverage may be shadowed. It also allows determination of the size and location of all large buildings or terrain features which could be possible causes of azimuth multipath and/or shadowing [11].

c. Collocation with ILS Localizer. Several studies, both experimental and theoretical, have been conducted to assess adverse effects of the MLS azimuth antenna on the performance of the ILS localizer, and also effects of the presence of the localizer on the MLS azimuth signal. The following are preliminary recommendations.

The characteristics of localizer arrays and knowledge gained from previous experience indicate that placement of the MLS azimuth station on localizer course centerline should produce the least effect on the course. The region investigated was from localizer course centerline to an maximum offset of 500 feet. For an offset of 20 feet, appreciable effects on the localizer course were noted; as the offset was farther increased, the effects on the localizer course were reduced but still considerable. Table 3 summarizes the data collected for the three types of localizers investigated. This table is composed of two headings. The data under the centerline heading show the effects on the localizer course for the MLS azimuth station mock-up on course centerline for placements of 50 and 100 feet ahead of the localizer array. The offset heading contains the data that produced the maximum effect on the localizer course for distances ahead of the localizer array 50 and 100 feet. The numbers in parentheses are the offsets from the localizer course centerline where the MLS mock-up produced the effect.

The flight measurement data confirm that siting the MLS azimuth station on localizer course centerline is the only feasible placement when the azimuth station is sited ahead of the localizer. The data indicate that for

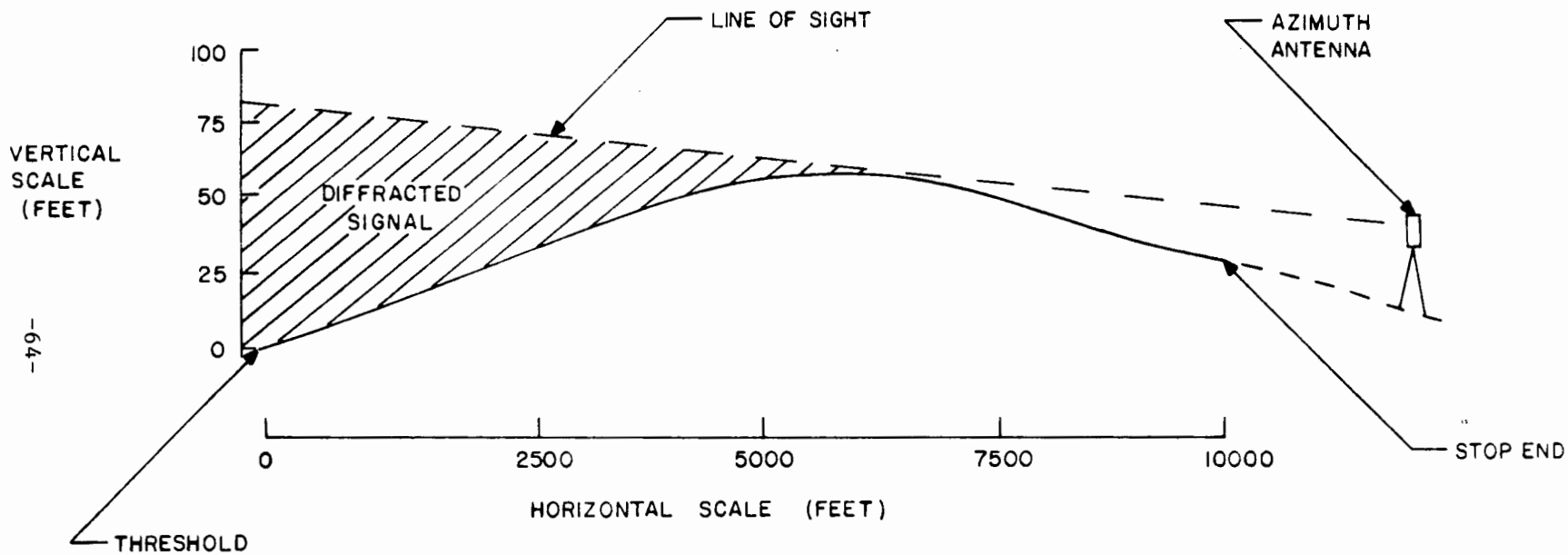

Figure 41. Azimuth Signal Diffraction by a Humped Runway.

Table 3. Summary of Localizer Flight Measurements.

SYSTEM	CENTERLINE		OFFSET	
	@50'	@100'	@50'	@100'
GRN - 27	10 μA	1 μA	34 μA (20')	19 μA (30')
V - RING (8)	9 μA	5 μA	57 μA (20')	17 μA (20')
LPD (14)*	1 μA	1 μA	- - - - - - -	22 μA (21')

*effect of MLS azimuth antenna only

localizer arrays similar to the GRN-27 or a 14-element wide aperture log periodic dipole, siting the MLS azimuth station 100 feet ahead of the localizer has negligible effect on the localizer course. For the 8-element V-ring some effects were noticed at 100 feet. Therefore, when possible the MLS azimuth station shold be sited at distances greater than 100 feet for these types of localizers.

If the localizer is close to the stop end and mounting the azimuth antenna in front of it would violate obstacle clearance requirements, or if problems with approach light systems require the azimuth antenna to be tower mounted, the azimuth antenna may then be behind the localizer. In this case, the azimuth antenna phase center should be at least 3 feet higher than the localizer elements and mounted in the horizontal direction no closer than 10 feet. As shown in Figure 42 [14], as the azimuth antenna is moved further back than 10 feet, the phase center should be raised to insure that the localizer is in the sidelobe region of the azimuth antenna vertical-plane radiation pattern.

If the localizer has a backcourse, symmetrical siting of the azimuth antenna is important to minimize disturbance to the backcourse signal.

d. Coexistence with Approach Light System and Other Objects in the Near-Field of the Azimuth Antenna. Small shadowing objects such as poles, chain link fences, and power lines in the far-field of the MLS antennas have negligible effect on performance [7]. Such objects may introduce error, however, if they are within the near-field. The distance from the antenna which defines the far-field/near-field boundary is given by

$$\text{Distance from antenna} = \frac{2D^2}{\lambda}$$

where D is the longest dimension of the antenna (the diagonal for a rectangular aperture, or the length for a line array) and λ is the wavelength. For example, the far-field boundary is about 421 feet for the 2° azimuth antenna, and 872 feet for the 1° azimuth antenna.

Experiments have shown that metallic cylinders as thin as 4 inches placed 200 feet away on boresight from the azimuth antenna can cause significant error [9]. All efforts should be made to remove objects from the near-field, and minimize the width of any that must remain.

If an MLS is to be sited on the same end of a runway with an approach lighting system (ALS), a potential conflict exists. The azimuth antenna must clear light structures in front of it to insure signal integrity while not blocking any lights and therefore reducing the effectiveness of the ALS.

The approach light plane is an area containing the lights in a single horizontal plane at the elevation of the runway threshold centerline and is 400 feet wide centered on the extended runway centerline. It may be horizon-

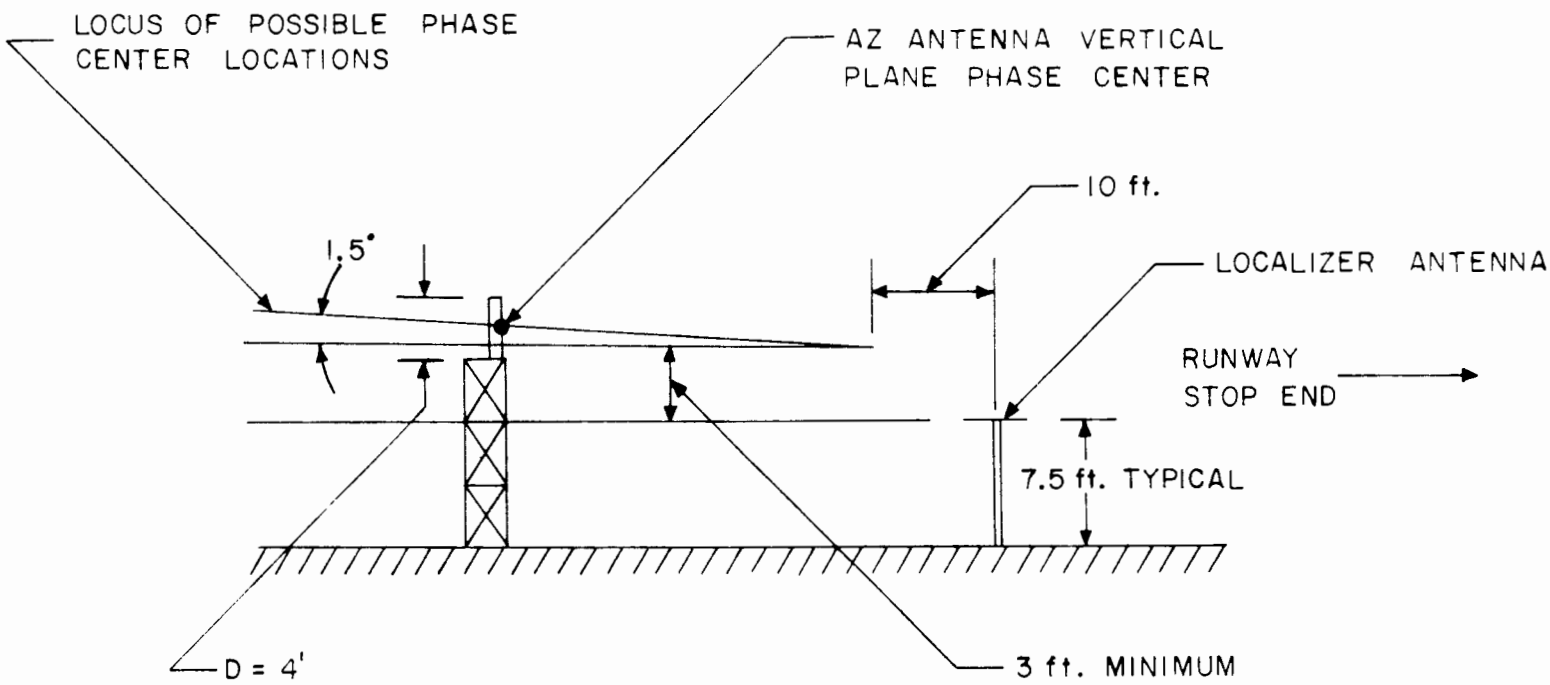

Figure 42. Azimuth Antenna Clearance above ILS Localizer.

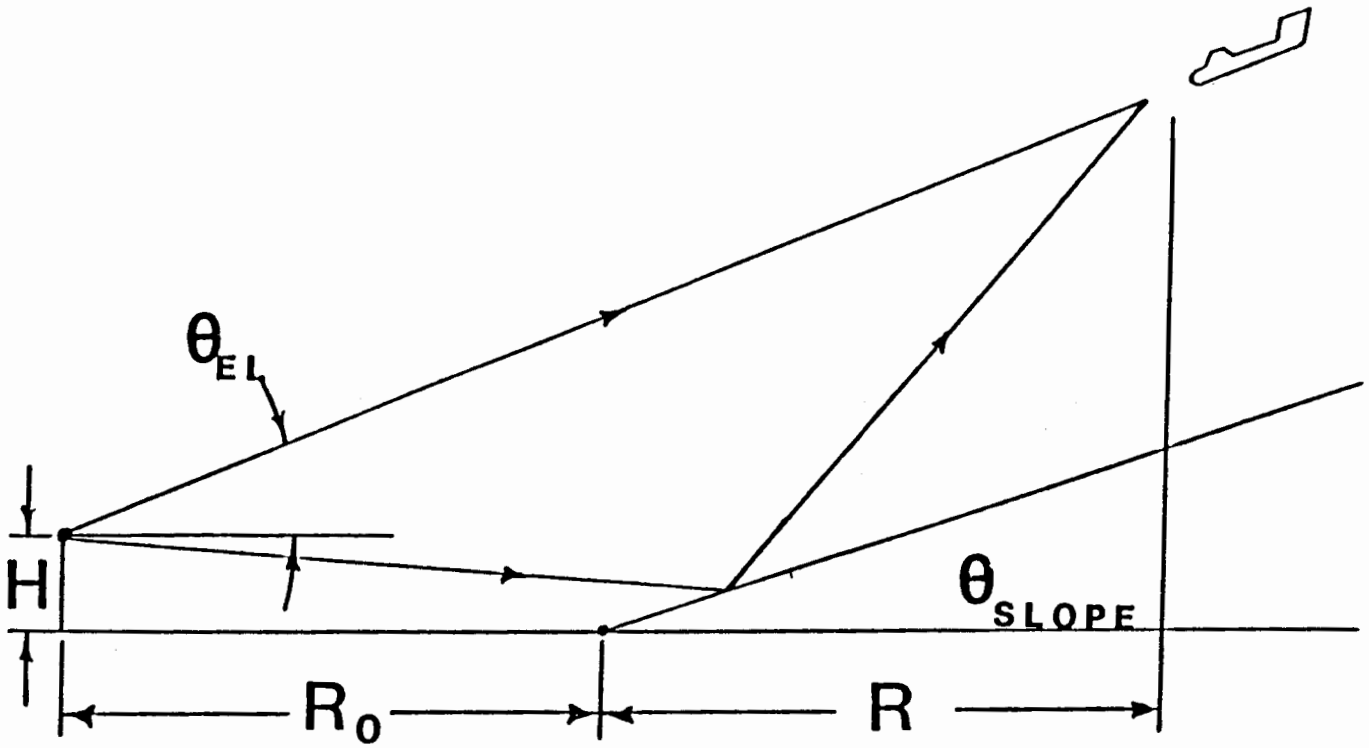

$$\theta_{SA} \approx 2 \left[\theta_{EL} + \left(\frac{180}{\pi} \right) \frac{H}{R_o + R} \quad \frac{R\ \theta_{SLOPE}}{R_o + R} \right]$$

$$\theta_{BW} < \frac{\theta_{SA}}{1.7}$$

Figure 43. Elevation Beamwidth Criterion for Front Course Terrain (from [1]).

However, the offset distance from runway centerline is an important factor in assuring satisfactory glide slope performance in the presence of the elevation antenna.

Considering ground plane effects, i.e. Fresnel zone, and knowledge gained from previous glide slope investigations indicate that the effects on the glide slope course caused by MLS elevation equipment can be minimized by avoiding siting that penetrates the Fresnel zone. The Fresnel zone migrates on the line between the receiver and the glide slope, changing in size as it migrates. To minimize the effects on the entire glide path the MLS elevation station should be sited so that it lies outside the region through which the Fresnel zone migrates. This indicates that siting the MLS elevation station on the run side of the diagonal between threshold and the glide slope should produce little effect on the course.

Table 4 contains the flight measurement results for the sideband reference glide slope. The data collected for this system show it to be the most sensitive to the MLS elevation equipment. Figure 44 shows the location of each position relative to the glide slope. The diagonal between threshold and the glide slope intersects the 1 and 1 1/2 degree MLS elevation rows at offsets of 332 and 348 feet, respectively. The flight data show that for offsets greater than 350 feet, the effect on the glide slope structure is severe. Offsets of less than 350 feet produced a lesser effect, exhibiting a minimum as the offset approaches the minimal 255-foot offset. In the event that the glide slope is offset 250-350 feet, it may be possible to site the MLS elevation station at an offset 50 to 100 feet greater than that of the glide slope. However, at this time there are no data confirming that this type of siting will produce satisfactory results.

4. DISCUSSION OF COMPUTER MODELING TO AID IN SITING. A computer model of the MLS was developed for the FAA by the Lincoln Laboratory of M.I.T. to assess the effects of reflections and shadowing on system performance. The model is currently operational at the FAA Technical Center, and at the Avionics Engineering Center at Ohio University.

The MLS model consists of two smaller models: the propagation model and the system model. The propagation model calculates the reflected and/or shadowed signal at all points along a given flight path. The system model then predicts and plots the raw error, path following error, and control motion noise as a function of distance along the flight path. All user defined parameters are read into the model via a FORTRAN BLOCK DATA subroutine. Graphical displays of airport layout (including placement of user-defined objects), and flight profile are included.

If the siting engineer deems it necessary to model an airport scenario, a list of the following information is needed as input to the model:

- the x, y, and z coordinates of the azimuth, elevation, and DME antennas. The origin is defined to be the intersection of the centerline and the stop end of the runway. The x-y plane lies on the airport surface, with the positive x-axis lying on the centerline. The positive z-axis measures altitude and passes through the stop end of the runway.

Table 4. Structure-Sideband Reference Glide Slope.

POSITION	ZONE 2		ZONE 3		CAT	COMMENTS
1 1/2°	μA	% Tol.	μA	% Tol.		
1 (450')	>20	>100	>30	>100	OT	50 μA reversal
2 (425')	44	220	>30	>100	OT	45 μA reversal
3 (400')	23	115	>30	>100	OT	48 μA reversals
4 (375')	10	50	29	145	I	
5 (350')	8	40	12	60	II	
6 (255')	10	50	8	40	II	
1°						
1 (450')	31	155	26	130	OT	>40 μA reversals
2 (400')	29	145	28	140	OT	37 μA reversals
3 (375')	---	---	---	---	---	
4 (350')	8	40	13	65	II	
5 (325')	---	---	---	---	---	
6 (255')	6	30	8	40	II	
NORMAL	12	60	10	50	II	

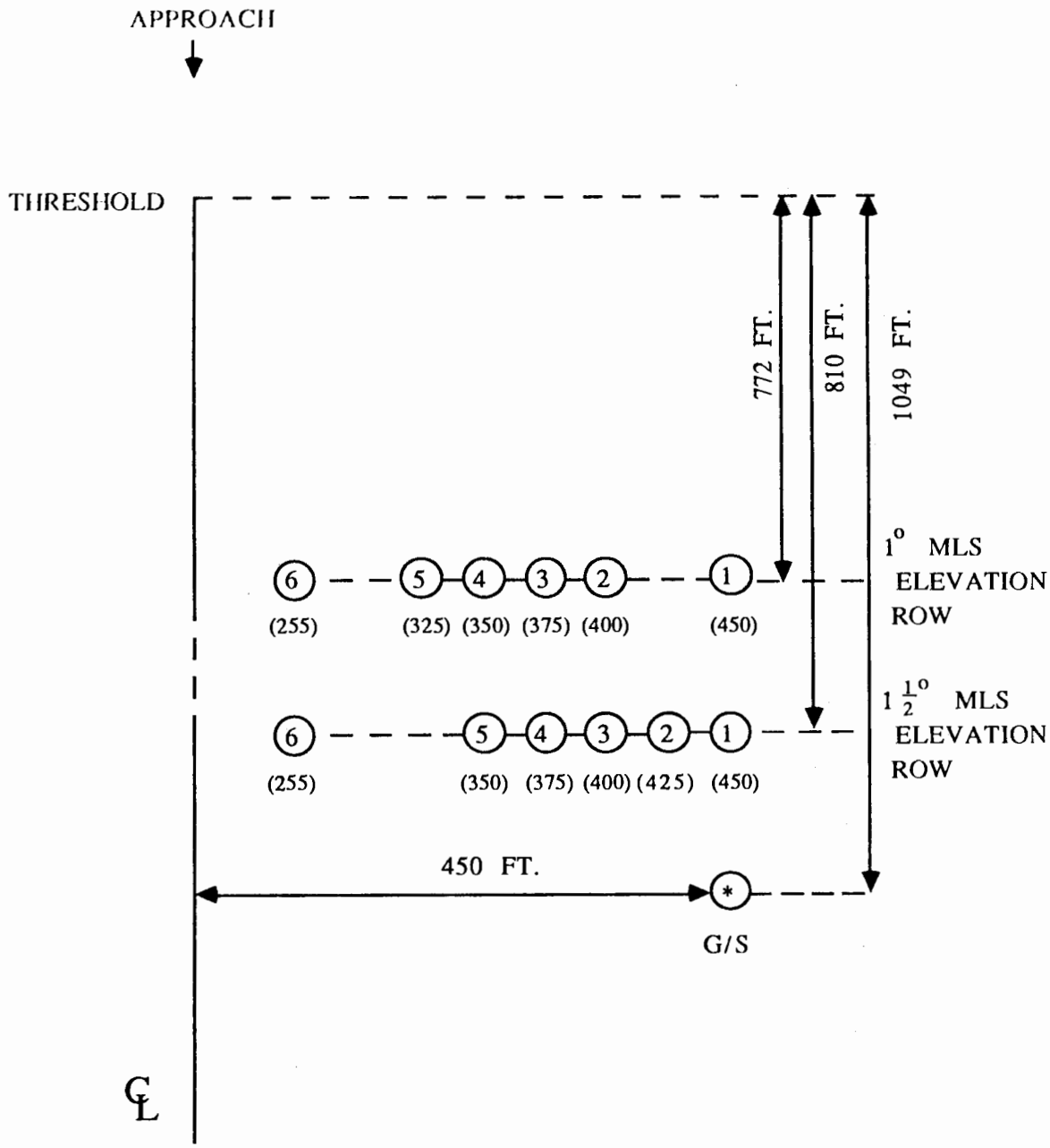

Figure 44. MLS Elevation Mock-up Positions.

-up to ten rectangular and ten triangular plates representing specular ground reflection may be specified. Their coordinates, RMS surface roughness height, and complex dielectric constant are required.

-a total of ten plates representing scattering and shadowing building surfaces can be specified. When necessary, each building can be represented by more than one plate. For each plate, it is required to know the coordinates of the corners, the surface roughness, complex dielectric constant, and the tilt of the building with respect to the vertical.

-a total of ten scattering and ten shadowing aircraft can be modeled. Each aircraft is specified by the x and y coordinates of the nose and tail, type of aircraft (B-747, B-707-320B, B-727, DC-10, C-124, Convair 880, or Hastings), and the altitude. Other aircraft may be modeled if necessary.

-the x, y, and z coordinates of the front, center, and back of a runway hump.

-the number of waypoints in the segmented approach, the x, y, and z coordinates of the end points of each segment, and the velocity of the receiver in ft./sec.

-runway length and width, the coordinates of the glide path intercept point, and the 3dB beamwidth of the antenna system.

For further information on MLS modeling, contact Federal Aviation Administration FAA/APM-400, 800 Independence Ave. S.W., Washington, D.C.

REFERENCES

[1] Redlien, H. W. and R. J. Kelly, "Microwave Landing System: The New International Standard," Bendix Communications Division, Baltimore, Maryland.

[2] "An Analysis of the Requirements for, and the Benefits and Cost of the National Microwave Landing System (MLS)," FAA-EM-80-7.

[3] DOT-FAA Specification FAA-STD-022c.

[4] DOT-FAA Specification FAA-E-2721/2b, MLS Ground Equipment, Angle Guidance and Data.

[5] DOT-FAA Specification FAA-E-2721/1b, MLS Ground Equipment, General Requirements.

[6] DOT-FAA Specification FAA-E-2721/3c, MLS Ground Equipment, Precision Distance Measuring Equipment, DME/P.

[7] Radcliff, R. D., "Signal Disturbance Due to Metallic Cylindrical Conductors at the MLS Frequency," Technical Memorandum M-20, Avionics Engineering Center, Department of Electrical and Computer Engineering, Ohio University, Athens, Ohio, August, 1984.

[8] Air Traffic Control Facility Analysis Program for the Microwave Landing System, FAA Order 7110.86, November 6, 1985.

[9] Evans, J. E., et. al., "MLS Multipath Studies, Phase 3, Final Report, Vol. II: Development and Validation of Modeling for MLS Techniques," Lincoln Laboratory, M.I.T., ATC-88, February 7, 1980.

[10] All Weather Operations Panel, Tenth Meeting, Agenda Item 2: MLS Technical Considerations, "Techniques for Off-Centerline Azimuth Siting," presented by S. Everett, Montreal, Sept. 4-21, 1984.

[11] "Microwave Landing System Site Survey and Performance Analysis Handbook," Report 11708, Hazeltine Corporation, March 27, 1985.

[12] Chamberlin, K. A., "Computer Model Study of MLS Derogation Due to Scattering from Aircraft on the Ground," Technical Memorandum M-24, Avionics Engineering Center, Department of Electrical and Computer Engineering, Ohio University, Athens, Ohio, July, 1985.

[13] "MLS Obstacle Area Siting Considerations," MSI Services, Inc., Technical Memorandum, July, 1985.

[14] "Microwave Landing System Ground Equipment Design Study for ILS/MLS Collocation," Hazeltine Corporation, Report 11749, July 2, 1985.