E. Klueg

Report No. FAA-RD-71-58

EVALUATION OF CRYOGENIC NITROGEN AS A FIRE-EXTINGUISHING AGENT FOR AIRCRAFT POWERPLANT INSTALLATIONS

George Chamberlain
Eugene Klueg
National Aviation Facilities Experimental Center
Atlantic City, New Jersey 08405

FAA WJH Technical Center
Tech Center Library
Atlantic City, NJ 08405

NOVEMBER 1971

AVAILABLE IN ELECTRONIC FORMAT

FINAL REPORT

Availability is unlimited. Document may be released to the National Technical Information Service, Springfield, Virginia 22151, for sale to the public.

Prepared for

DEPARTMENT OF TRANSPORTATION

FEDERAL AVIATION ADMINISTRATION

Systems Research & Development Service

Washington D. C., 20590

The contents of this report reflect the views of the National Aviation Facilities Experimental Center, Atlantic City, New Jersey, which is responsible for the facts and the accuracy of the data presented herein. The contents do not necessarily reflect the official views or policy of the Department of Transportation. This report does not constitute a standard, specification or regulation.

The Federal Aviation Administration is responsible for the promotion, regulation and safety of civil aviation and for the development and operation of a common system of air navigation and air traffic control facilities which provides for the safe and efficient use of airspace by both civil and military aircraft.

The National Aviation Facilities Experimental Center maintains laboratories, facilities, skills and services to support FAA research, development and implementation programs through analysis, experimentation and evaluation of aviation concepts, procedures, systems and equipment.

TECHNICAL REPORT STANDARD TITLE PAGE

1. Report No.	2. Government Accession No.	3. Recipient's Catalog No.
FAA-RD-71-58		

4. Title and Subtitle	5. Report Date
EVALUATION OF CRYOGENIC NITROGEN AS A FIRE-EXTINGUISHING AGENT FOR AIRCRAFT POWERPLANT INSTALLATIONS	November 1971
	6. Performing Organization Code
7. Author(s) George Chamberlain, Eugene P. Klueg	8. Performing Organization Report No. FAA-NA-71-3
9. Performing Organization Name and Address National Aviation Facilities Experimental Center Atlantic City, New Jersey 08405	10. Work Unit No.
	11. Contract or Grant No. Project No. 502-301-15X
12. Sponsoring Agency Name and Address FEDERAL AVIATION ADMINISTRATION Systems Research & Development Service Washington D. C. 20590	13. Type of Report and Period Covered Final Report 1968 - 1971
	14. Sponsoring Agency Code

15. Supplementary Notes

None

16. Abstract

Proposals have been made to carry relatively large quantities of liquid nitrogen (LN_2) aboard commercial aircraft for the purpose of fuel tank inerting. Secondary uses, such as powerplant fire extinguishment, have been suggested. Testing was conducted at the National Aviation Facilities Experimental Center to determine the feasibility of using LN_2 as an aircraft powerplant fire-extinguishing agent and also to determine the characteristics of LN_2 when used as an extinguishant. These tests were conducted in a fire test facility using a full-scale aircraft turbojet engine and nacelle for subsonic low-altitude flight condition simulation and also in a mockup engine/nacelle facility where nacelle volume and airflow could be varied. For all tests, the LN_2 was delivered from a dewar where it was stored under pressure as a saturated liquid. All fire tests were conducted using JP-4 jet fuel which was spray released and spark ignited. In addition to the preliminary feasibility study, this report describes the experimentation conducted to determine the design criteria required for an effective agent quantity, discharge rate, discharge conditions, and distribution system configuration. The report also describes the effects of an inadvertent discharge on engine components, the effects of a damaged cowling, and the cooling of potential reignition sources.

17. Key Words		18. Distribution Statement
Aircraft	Fire Extinguishers	Availability is unlimited. Document may be released to the National Technical Information Service, Springfield, Virginia 22151, for sale to the public.
Aircraft Fires	Fire Safety	
Aviation Safety	Fluids	
Cryogenics	Gases	
Engine Nacelles	Nitrogen	

19. Security Classif. (of this report)	20. Security Classif. (of this page)	21. No. of Pages	22. Price
Unclassified	Unclassified	148	

Form DOT F 1700.7 (8-69)

TABLE OF CONTENTS

		Page
INTRODUCTION		1
	Purpose	1
	Background	1
DISCUSSION		2
	Characteristics of LN_2 as a Fire-Extinguishing Agent	2
	Test Facilities and System Installations	3
	Effect of System Pressure Losses and LN_2 Flashing	13
	Effect of Fire Size	15
	A Comparison of Gaseous Nitrogen and Liquid Nitrogen	18
	Effect of Compartment Airflow	23
	Effect of LN_2-Induced Cooling	24
	Effect of Inadvertent LN_2 Discharge	30
	Effect of Damaged Cowling	34
	Effect of Installation Volume and Type Discharge	36
	Nitrogen Flow Characteristics for the Tested Systems	46
CONCLUSIONS		59
APPENDIX A	Description and Results of Preliminary Feasibility Study (21 pages)	1-1
APPENDIX B	Summary of Test Conditions and Test Results (6 pages)	2-1
APPENDIX C	Test Event Schedules (6 pages)	3-1
APPENDIX D	Nitrogen Flow Rate Calibrations as a Function of Nozzle, Orifice, and Tube Size (5 pages)	4-1
APPENDIX E	Location and Description of Fuel-to-Fire Nozzles Used in the Jet Engine Test Installation (4 pages)	5-1

LIST OF ILLUSTRATIONS

Figure		Page
1	Five-Foot Fire Test Facility	4
2	Test Engine and Nacelle Installed in Fire Test Facility	5
3	Liquid Nitrogen Storage Container and Typical Distribution System	7
4	Bottom View of Powerplant and Nacelle Showing Fog Nozzle Discharge System	8
5	Diagrammatic View of Dewar Assembly and Instrumentation	9
6	LN_2 Distribution Systems and Instrumentation Schematic	10
7	Bottom Aft-Looking View of Powerplant Nacelle Showing Fuel-to-Fire Nozzle and Fire Sensor	11
8	Mockup Engine/Nacelle Facility	12
9	Liquid Nitrogen Discharge Rate as a Function of Flashing in the Distribution System	16
10	History of Test Events for 80-Foot-Long Distribution Lines and a Comparable 21-Foot-Long Distribution Line	21
11	Distribution System Pressures, Temperatures and Nitrogen Flow for an 80-Foot Pressurized Line and 80- and 21-Foot Unpressurized Lines	22
12	LN_2 Flow Requirements as a Function of Compartment Airflow in the Jet Engine Installation	25
13	LN_2 Flow Requirements as a Function of Compartment Airflow in the Mockup Engine/Nacelle Facility	26

LIST OF ILLUSTRATIONS (continued)

Figure		Page
14	Ambient Temperature in Jet Engine Installation During Nitrogen Discharge	28
15	Temperature Decay of Twisted Safety Wire With and Without Nitrogen Discharge	29
16	Location of LN_2 Impingement on Typical Turbine Aircraft Fuel Pump	32
17	Plan View of Mockup Engine/Nacelle Facility Showing Instrumentation and Test Equipment	37
18	Perforated Loop Distribution System	39
19	Aft View of Test Installation in Mockup Engine/Nacelle Facility	40
20	Mockup Engine/Nacelle Facility Showing Test Section and Perforated Loop System	41
21	Influence of Compartment Void Volume on Nitrogen Flow Required for Fire Extinguishment	45
22	System Configurations and Instrumentation Used for Nitrogen Flow Characteristic Study	48
23	Nitrogen Flow Rates as a Function of Dewar Saturation Pressure and Dewar Fill Ratio for 1- and 1/2-Inch-Diameter Open-End Nozzle Systems	52
24	Nitrogen Flow Rates as a Function of Dewar Saturation Pressure and Dewar Fill Ratio for 1-Inch-Diameter Perforated Tube Discharge System	53
25	System Pressure Loss as a Function of Nitrogen Flow Rate and Quality	54
26	Nitrogen Quality as a Function of System Pressures	56
27	Nozzle Discharge Rates for a 1-Inch-Diameter Nitrogen System as a Function of Dewar Fill Ratio, Saturation Pressure, and Quality	57

LIST OF ILLUSTRATIONS (continued)

Figure		Page
4-1	Nitrogen Flow Rate Calibration for 21 Feet of 1/2-Inch Tubing	4-3
4-2	Nitrogen Flow Rate Calibration for 21 Feet of 3/4-Inch Tubing	4-4
4-3	Nitrogen Flow Rate Calibration for 21 Feet of 1-Inch Tubing	4-5
5-1	Location of Fuel-to-Fire Nozzles and LN_2 Discharge Nozzle in Test Engine Installation	5-3

LIST OF TABLES

Table		Page
1	Physical Properties of Several Extinguishants	3
2	Effect of Pressure Losses and Flashing on LN_2 System Requirements	15
3	Effect of Fuel-to-Fire Flow Rate on LN_2 Flow Rate Requirements	18
4	Results of LN_2 Discharge on Typical Turbine Aircraft Fuel Pump	33
5	Effect of Simulated Damaged Cowling on Nitrogen Flow Requirements	35
6	Summary of Nitrogen Flow Requirements as a Function of Airflow, Fuel Flow, Compartment Volume, and Discharge Nozzle	43
7	Effect of Type of Discharge on Nitrogen Flow Rate Requirements for Fire Extinguishment	47
8	Nitrogen Flow Rate as a Function of System Configuration, Dewar Saturation Pressure, and Dewar Fill Ratio	50

LIST OF SYMBOLS

A_n	=	Nozzle cross-sectional discharge area, in^2
A_t	=	Nominal inside cross-sectional area of tubing, in^2
FR	=	Dewar weight-fill ratio. Rated liquid nitrogen capacity (100 lbs) divided by actual fill weight, percent.
GN_2	=	Gaseous nitrogen
LN_2	=	Liquid nitrogen
N_2	=	Gaseous and liquid nitrogen mixture
P_D	=	Dewar pressure, psig
P_{D_S}	=	Dewar saturation pressure, psig
$\bar{P}_D$	=	Average dewar pressure for specifically grouped data, psig
P_n	=	Static pressure immediately upstream of discharge nozzle, psig
$P_{1,2,a,b,\ldots}$	=	Pressure at various designated stations in distribution system, psig
V_v	=	Void volume of test article, ft^3
$\dot{W}_A$	=	Weight rate of flow of nacelle air, lb/sec
$\dot{W}_F$	=	Rate of fuel flow, gpm
$\dot{W}_{GN_2}$	=	Weight rate of flow of gaseous nitrogen, lb/sec
W_{LN_2}	=	Weight of liquid nitrogen in dewar, lbs
$\dot{W}_{LN_2}$	=	Weight of flow of liquid nitrogen from the dewar, lbs/sec
$\dot{W}_{N_2}$	=	Weight rate of flow of gaseous and liquid nitrogen mixture, lbs/sec
x	=	Mixture quality, ratio of gaseous nitrogen weight to total mixture weight
$\bar{X}$	=	Average mixture quality for specifically grouped data
$\bar{X}_1$	=	Average mixture quality at Station P_1 for specifically grouped data

INTRODUCTION

Purpose

The purpose of this project was to determine the feasibility of using cryogenic nitrogen as an aircraft powerplant fire extinguishing agent and to provide fundamental design criteria for an effective extinguishing system utilizing that agent.

Background

Liquid nitrogen (LN_2) inerting systems have been used for several years on military aircraft, such as the B-52, SR-71, and B-70, to inert the fuel systems in an attempt to prevent ignition in the fuel tanks. Hardware has been developed for installation and flight tests in a C-135 and a C-141 aircraft. Adoption of fire protection for fuel systems in commercial aircraft is being considered, and liquid nitrogen inerting is among the methods being considered for this purpose. Such a system would require several hundred pounds of LN_2 to be carried aboard the aircraft. Due to the availability of large quantities of LN_2 for inerting when such a system is used, additional uses are being investigated, such as for extinguishing powerplant fires.

On July 1, 1968, Flight Standards Service issued request No. FS-100-68-92 for an R, D, and E effort to investigate the extinguishing properties of cryogenic nitrogen and to determine the best method of using it in an installed fire-extinguishing system. At the request of Aircraft Development Service, a project was initiated at the National Aviation Facilities Experimental Center (NAFEC) in August 1968 to provide the required information. The first phase of testing under this project was initiated on September 3, 1968, and was completed on November 5, 1968. A complete description of the first phase of the project is presented in Appendix A. The test results indicated that- (1) LN_2 was effective in extinguishing fires in aircraft powerplant compartments, (2) the reserve quantity of LN_2 (approximately 100 pounds) expected to be available from an LN_2 fuel tank inerting system in a large commercial transport aircraft would be sufficient to extinguish fires, and (3) on aircraft where a large quantity of LN_2 is available, an LN_2 fire-extinguishing system could provide greater in-flight powerplant fire protection than could the limited quantity of agent available in a conventional high-rate-discharge extinguisher system.

Based upon the determination that the use of LN_2 was feasible for powerplant fire protection, a second phase of the project was initiated in September 1969. The second phase was conducted to experimentally define the requirements for an effective extinguishing system as influenced by nacelle ventilation and free volume and in terms of agent quantity, discharge rate, discharge conditions and distribution provisions. The effects of an inadvertent discharge, damaged cowling, and the cooling of potential reignition sources were also investigated. The second phase of the project, which finished the assigned test program, was completed in July 1970.

DISCUSSION

Characteristics of LN_2 as a Fire-Extinguishing Agent

Like carbon dioxide, the effectiveness of LN_2 in extinguishing fires is dependent upon (1) oxygen dilution to the level that will no longer support combustion, and (2) cooling to reduce the temperature of the combustible below its ignition temperature or the point at which it vaporizes. A comparison of the physical properties of LN_2, carbon dioxide, and the two most common halogenated fire-extinguishing agents (CBr_2F_2 and $CBrF_3$) currently in use on U. S. military and commercial aircraft is made in Table 1. Since nitrogen at atmospheric pressure has a lower boiling point than the other three agents and a higher heat of vaporization than the two halogenated agents, the amount of cooling during an LN_2 discharge can be expected to be greater when compared on a weight basis. Likewise, since the expansion ratio of nitrogen when converted from a liquid to a gas is considerably higher than the other three agents, nitrogen produces the greatest amount of oxygen dilution. The overall effectiveness of LN_2 as a fire-extinguishing agent, however, cannot be expected to be as great as the highly effective halogenated agents. These agents do not depend primarily on oxygen dilution and cooling, but on a chemical interference with the combustion process. The lower effectiveness of nitrogen does not eliminate it from consideration as a fire-extinguishing agent on aircraft where large quantities can be made available from the reserve supply of LN_2 stored for inerting fuel tanks and other purposes.

TABLE 1. - PHYSICAL PROPERTIES OF SEVERAL EXTINGUISHANTS

CHEMICAL FORMULA	LN_2	CO_2	$CBrF_3$	CBr_2F_2
BOILING POINT at 1 atm, °F	-320	-109	-72	76
HEAT OF VAPORIZATION at boiling point, Btu/lb.	85	113	48	53
VOLUME of 1 lb of gas at 70°F & 1 atm, cu ft.	14	9	3	3
GAS TO LIQUID VOLUME RATIO gas at 70°F & 1 atm,	696:1	403:1	254:1	356:1
liquid at: Boiling Point		70°F	70°F	76°F

Test Facilities and System Installation

Two wind-tunnel-type facilities at NAFEC were utilized in the conduct of the tests. These facilities were the 5-foot Fire Test Facility, utilizing a JT-12 turbojet engine with a left-hand, in board, C-140 engine/nacelle installation as the test article, and a mockup engine/nacelle facility.

Five-Foot Fire Test Facility: The Five-Foot Fire Test Facility, shown in Figure 1, is described in detail in Systems Research and Development Service (SRDS) Handbook RD P 6000.2, entitled "Technical Facilities at NAFEC." Airflow through the facility's 20-foot-long by 5-foot-diameter cylindrical test section was induced by the ejector pumping action of two J-57 turbojet engines located downstream of the test section. The airflow simulated subsonic, low-altitude flight conditions around the C-140 engine nacelle, which is shown installed in the test section in Figure 2.

The nacelle was divided into two fire zones by a vertical transverse fire seal. The LN_2 extinguishing system and instrumentation were installed in the nacelle accessory and compressor section (Zone II). The void volume within Zone II was approximately 12.6 cubic feet. For the majority of the tests, the source of airflow within the nacelle was the engine compressor interstage air bleed. The bleed air discharged from a series of orifices around the periphery of the engine at the fourth compressor stage. The flow was a function of the engine primary airflow rate. The compressor interstage ports were open from engine start to approximately 81-percent compressor rotational speed (N_1).

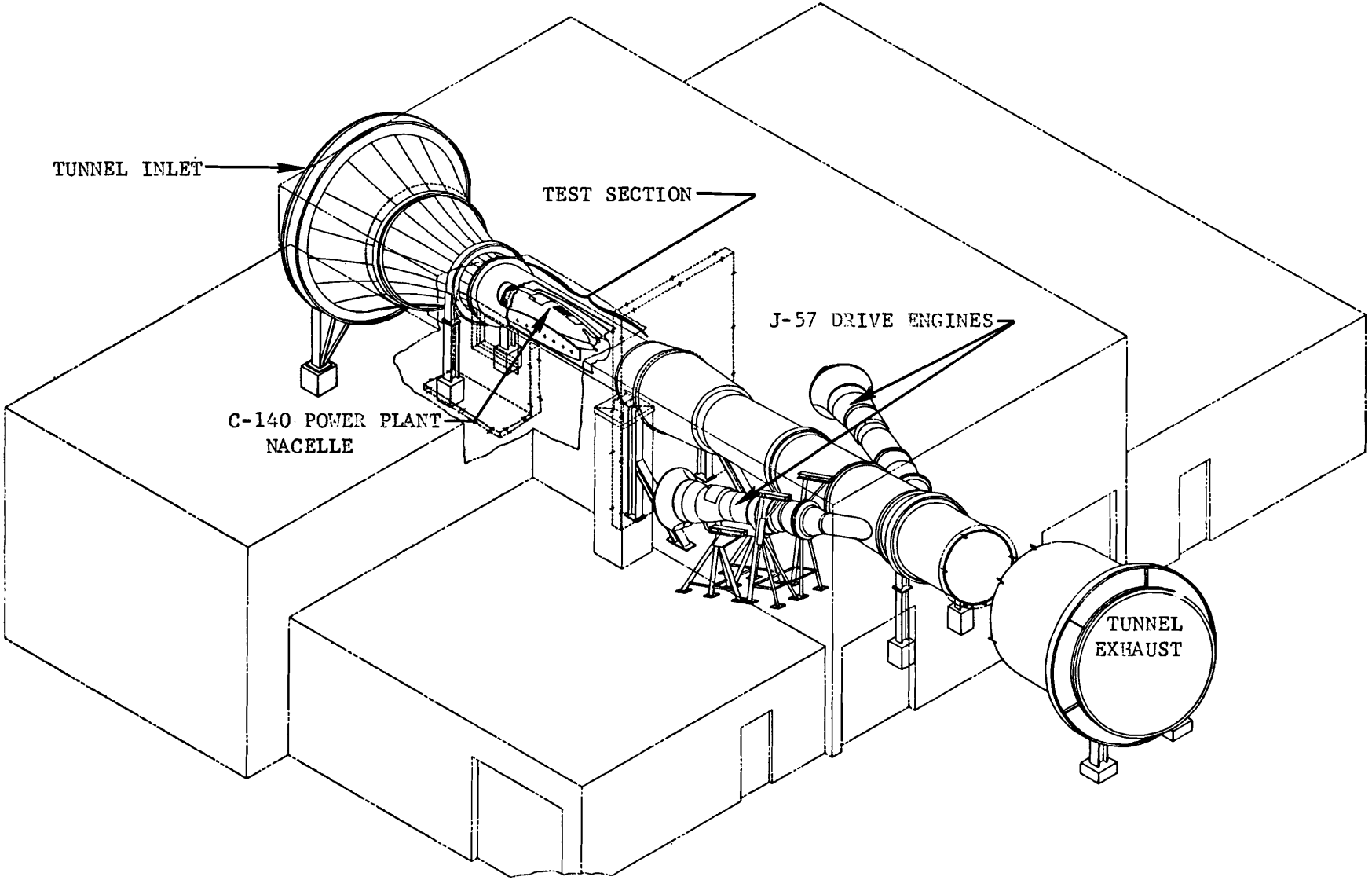

FIGURE 1 FIVE-FOOT FIRE TEST FACILITY

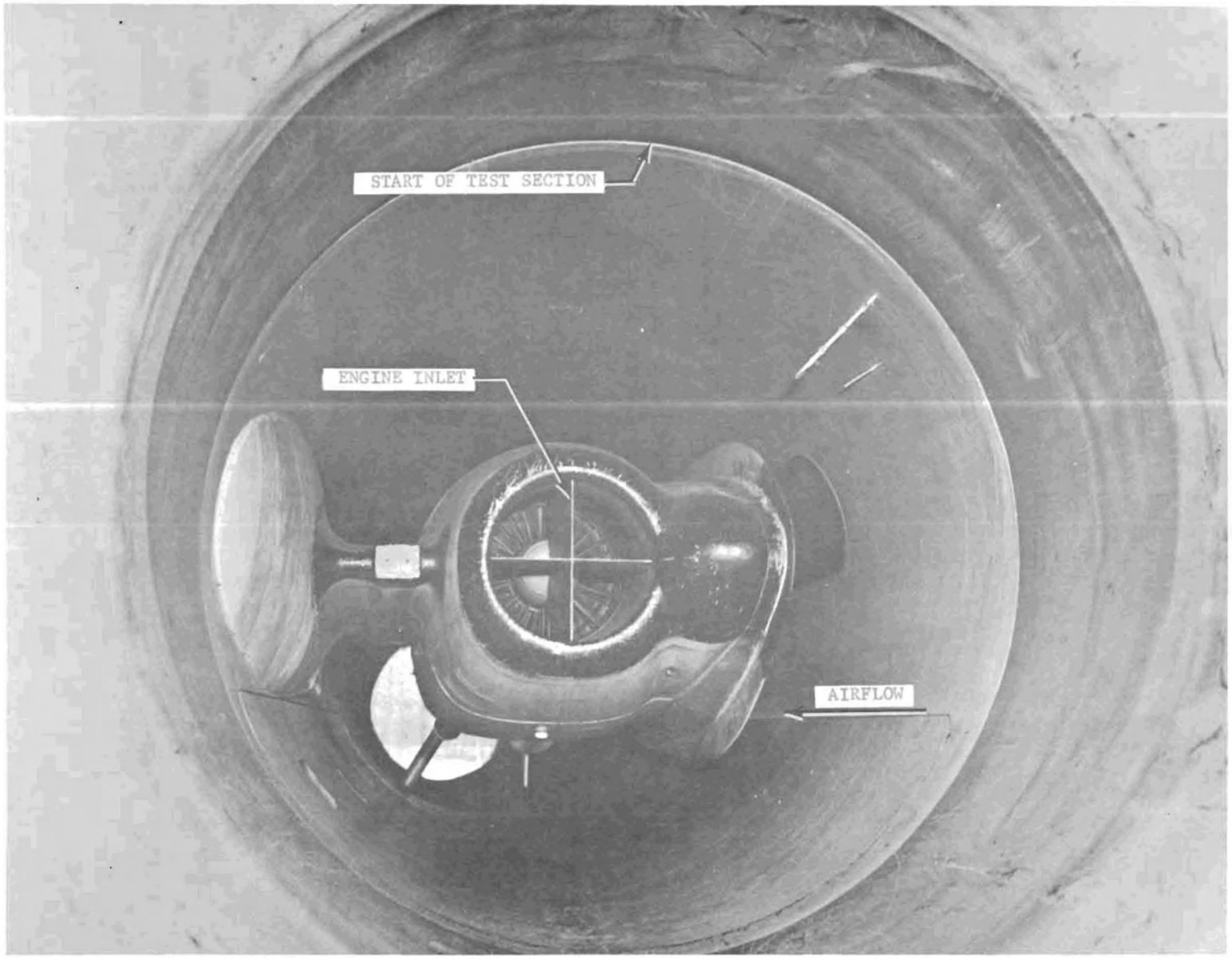

FIGURE 2 TEST ENGINE AND NACELLE INSTALLED IN FIRE TEST FACILITY

LN_2 extinguisher systems were developed and used in this facility to extinguish test fires in the compressor and accessory compartment of the turbojet powerplant nacelle. The LN_2 storage container (dewar) and a typical distribution system used during the tests are shown in the Fire Test Facility in Figure 3. LN_2 was routed from the cryogenic container by operating a control valve, through a 1-inch tube system and was discharged into the nacelle through either four fog nozzles or open-end tube systems. A bottom view of the test engine installation showing the fog-nozzle location is pictured in Figure 4.

A diagrammatic view of the dewar is shown in Figure 5. The dewar was rated at 100-pound liquid nitrogen capacity plus an approximate 1/3-cubic-foot vapor space. During some tests in the program, a portion of the vapor space was filled with liquid, thus accounting for dewar fill ratios reported in excess of 100 percent. The locations of the dewar valving, gauges, discharge temperature probe, and liquid withdrawal tube are also shown. A schematic drawing showing the distribution systems and the associated flow control orifices and instrumentation pickups is illustrated in Figure 6.

The nitrogen was stored under pressure in the dewar as a saturated liquid. All the test fires resulted from spray releasing and spark igniting JP-4 fuel. A surveillance-type, radiation sensing, flame detector was installed within the nacelle in the vicinity of the test fire fuel spray nozzle. The fuel spray nozzle and flame detector are shown in Figure 7. The detector output signal was recorded by an oscillograph to indicate ignition and extinguishment times for the test fires. The test fires were located in a remote area relative to the LN_2 discharge location to avoid the effects of localized high concentration of nitrogen in the area of the fire.

Mockup Engine/Nacelle Facility: The second facility, shown in Figure 8, is a boiler plate mockup of an engine nacelle. Outside air is drawn into the tunnel circuit by an axial-flow fan and fed through a perforated plate into the test section. The air flows through the annular passage formed by an elliptically domed cylinder positioned within a larger cylinder to simulate a cowled engine. The airflow through this annulus is made turbulent by ribs installed alternately on the outer and inner cylinders. The air exits the test section through a perforated ring into the exhaust section of the tunnel. The volume of the test section can be varied by positioning the perforated ring fore or aft on

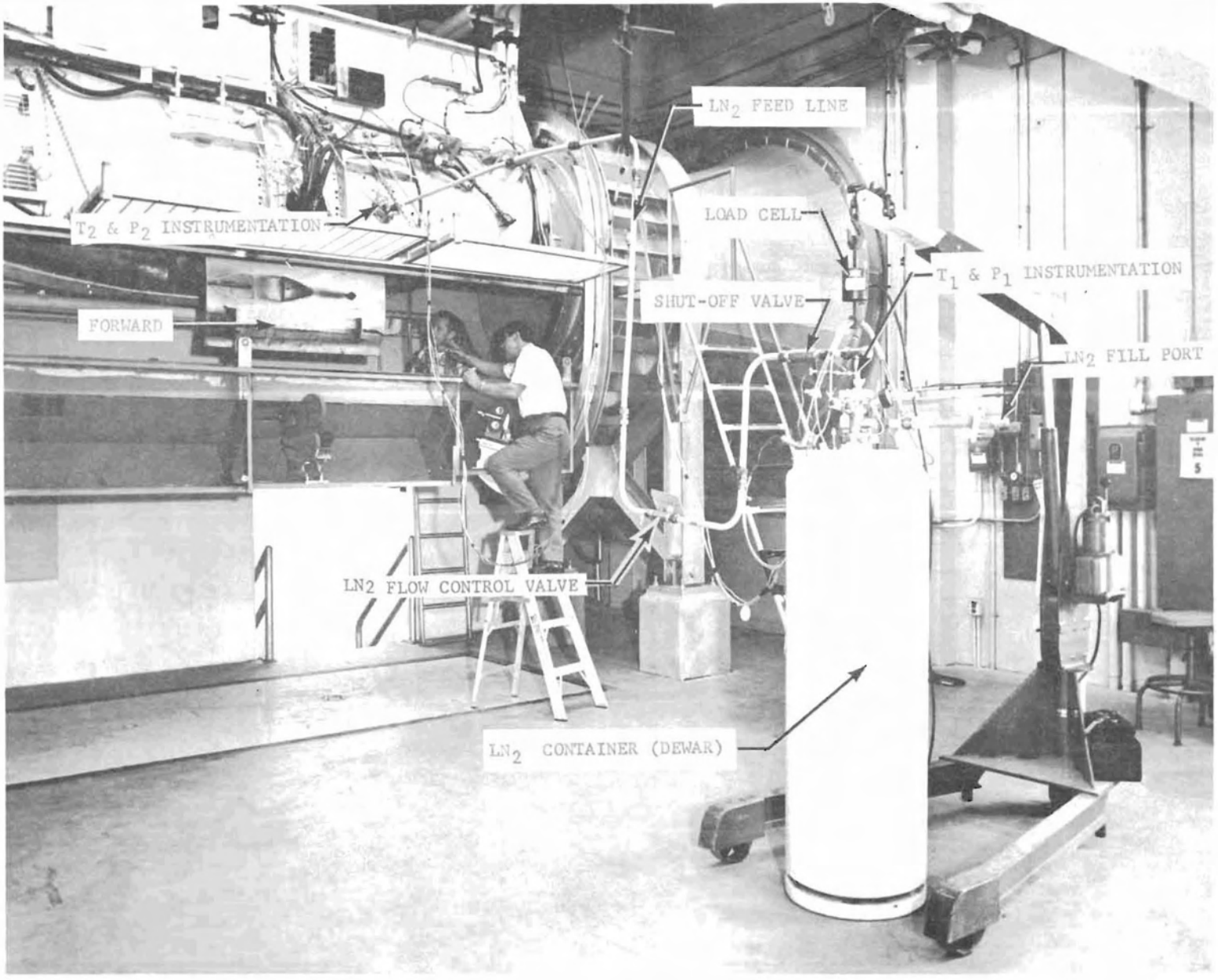

FIGURE 3 LIQUID NITROGEN STORAGE CONTAINER AND TYPICAL DISTRIBUTION SYSTEM

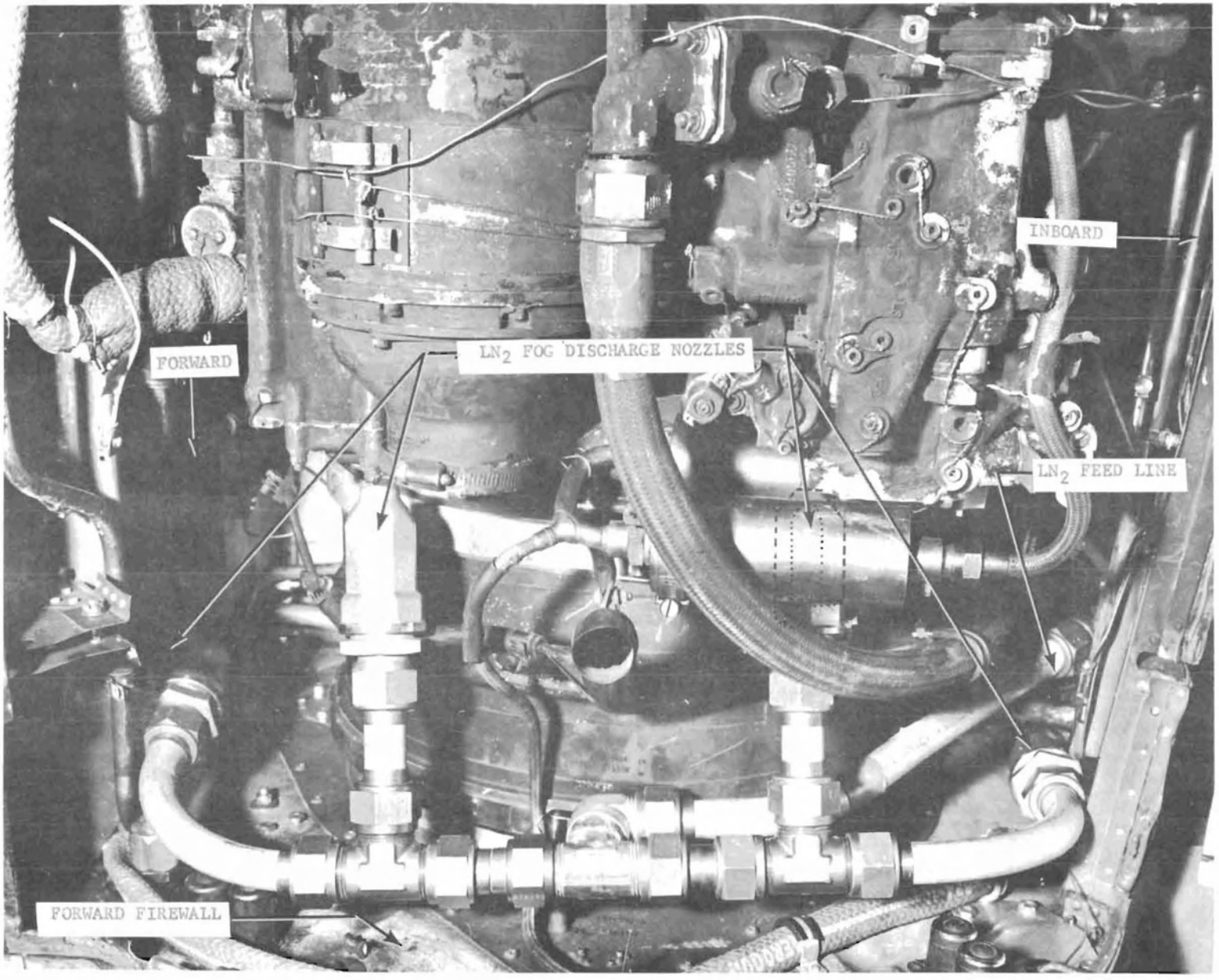

FIGURE 4 BOTTOM VIEW OF POWERPLANT AND NACELLE SHOWING FOG NOZZLE DISCHARGE SYSTEM

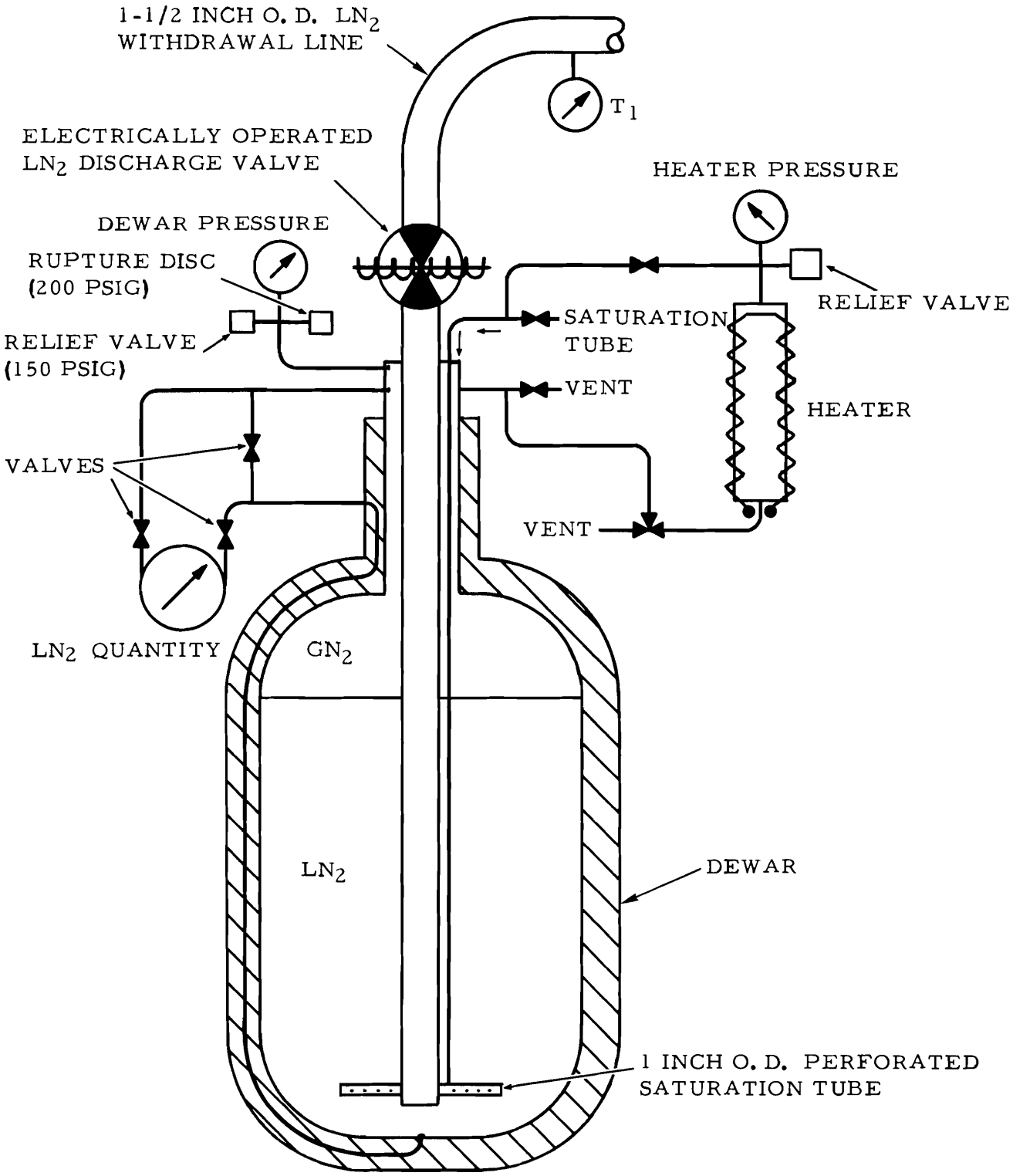

FIGURE 5 DIAGRAMMATIC VIEW OF DEWAR ASSEMBLY AND INSTRUMENTATION

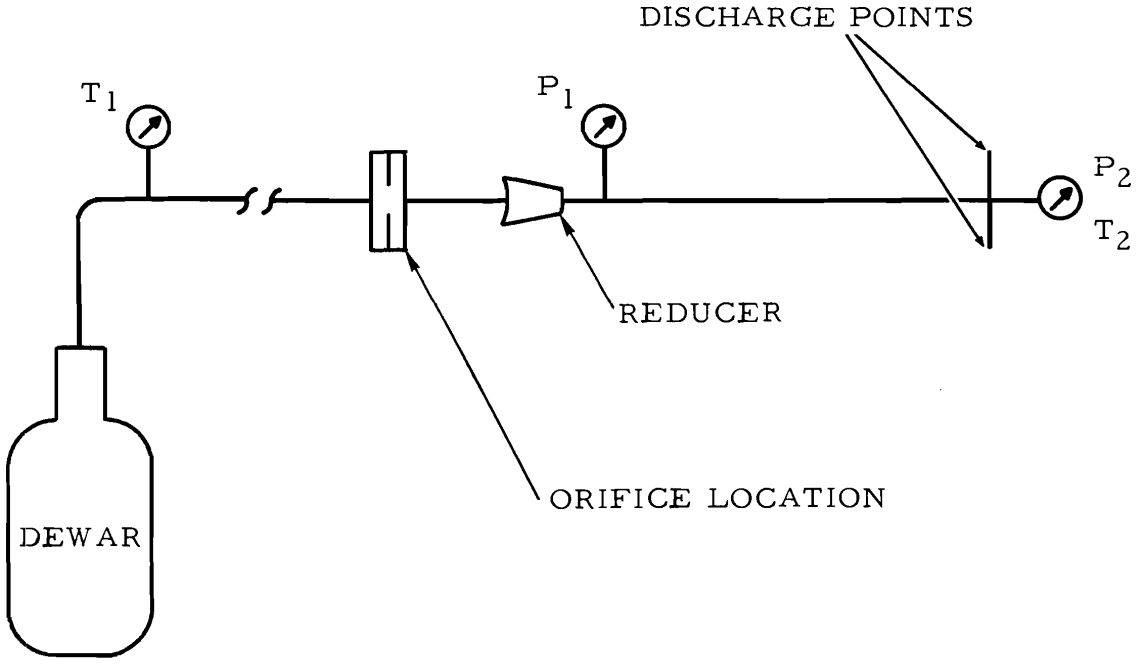

(a) LN_2 DISTRIBUTION SYSTEM 1

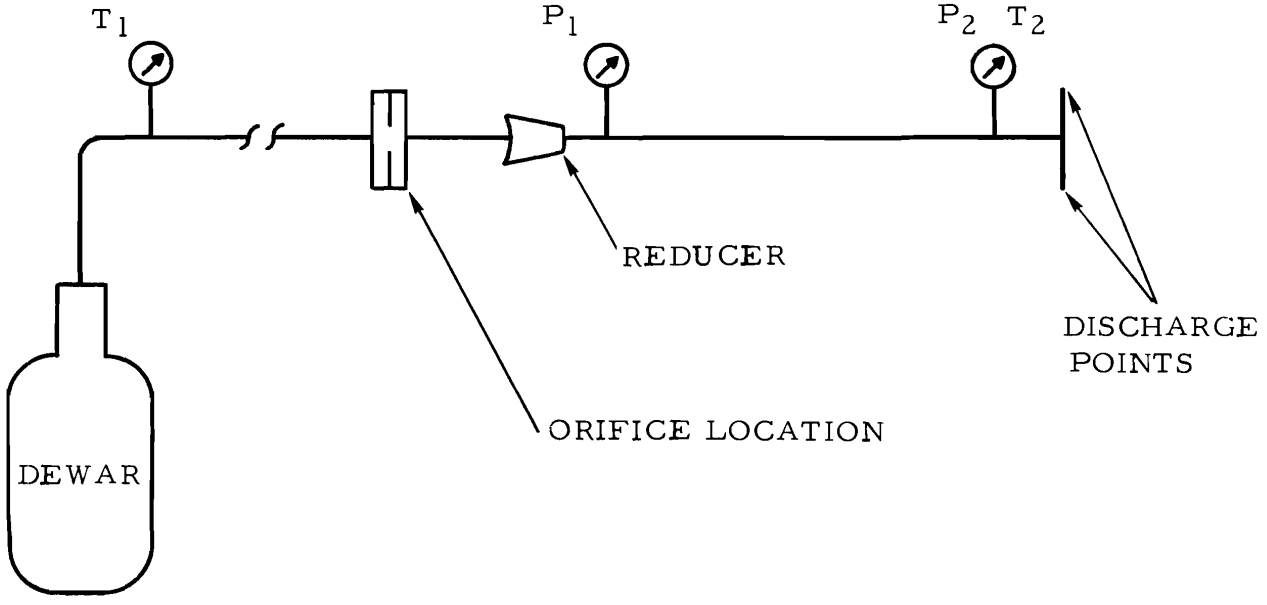

(b) LN_2 DISTRIBUTION SYSTEM 2

FIGURE 6 LN_2 DISTRIBUTION SYSTEMS AND INSTRUMENTATION SCHEMATIC

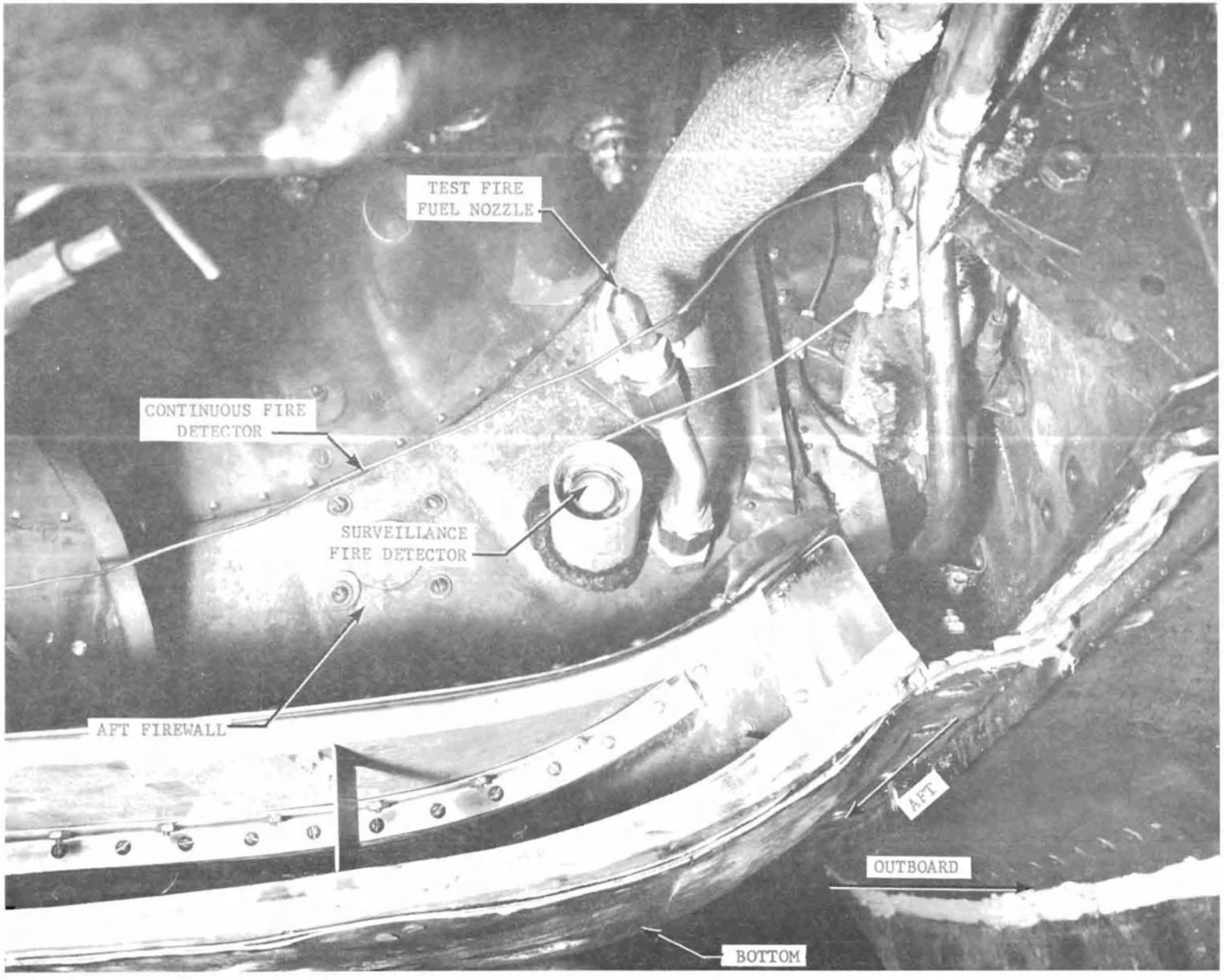

FIGURE 7 BOTTOM AFT-LOOKING VIEW OF POWERPLANT NACELLE SHOWING FUEL-TO-FIRE NOZZLE AND FIRE SENSOR

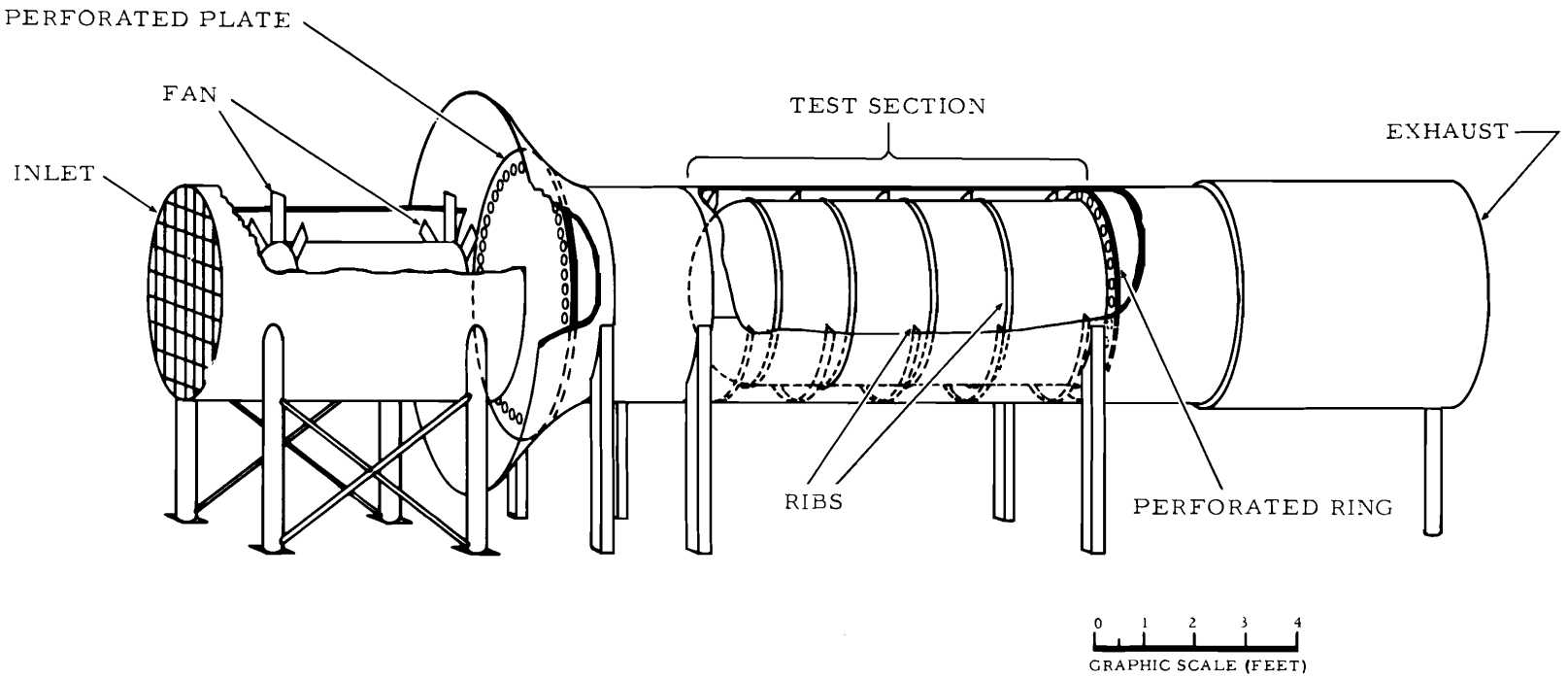

FIGURE 8 MOCKUP ENGINE/NACELLE FACILITY

the inner cylinder. The LN_2 distribution systems used in both facilities were similar. LN_2 was discharged into the second facility through either open-end tube systems or a perforated tube system. In both facilities, no attempt was made to optimize the type of discharge and the distribution within the test compartments. Test fire ignition and extinguishment were also monitored by a radiation-type flame detector in this facility.

Effect of System Pressure Losses and LN_2 Flashing

Objective: An objective of this work was to experimentally define the effects of pressure losses and the associated rapid conversion from the liquid state to the gaseous state (flashing) in the LN_2 distribution systems on (1) the nitrogen quantity requirements for extinguishing fires and (2) the size of the distribution system. Since the two-phase flow problem encountered in a transfer system being supplied with a saturated liquid is extremely complex, no attempt was made to establish design information and procedures related to predicting the quality (x), quantity, and cool-down time for any given distribution system. The investigation was limited to determining whether the amount of flashing and cooling that occurs in such a system has a significant effect on (1) the quantity requirements for extinguishing a fire, (2) the discharge rate through a given size system, and (3) the time required to extinguish the fire (system response).

As a saturated liquid flows through an uninsulated tube, a portion of the liquid is converted to vapor. The amount of vapor produced is a function of (1) the pressure losses in the tube which lower the local static pressure below the existing vapor pressure and produce flashing, and (2) the amount of heat transfer through the wall as the tube is cooled. This section of the report deals primarily with the flashing and system response effects. The cool-down phenomena associated with long-line lengths will be discussed in a following section of the report.

Method: The amount of flashing was controlled by inserting various sizes of orifice plates in the distribution system at the dewar outlet. The nitrogen flow rate was controlled by varying the size of the nozzles at the outlets. The distribution systems used for this investigation and the location of the orifice plates are shown in Figure 6. Nitrogen was saturated at approximately 100 pounds per square inch gage (psig), plumbed through 21 feet of either 1/2-, 3/4-, or 1-inch tubing, and discharged through a standard AN-834 bulkhead tee fitting. The size of the tee fitting corresponded to the size of tubing being used.

Changes in discharge nozzle size were accomplished by attaching either AN-894 reducer bushings or drilled AN-820 caps to the AN-834 tee fitting. Initial testing involved calibration discharges into an open laboratory area to determine nitrogen flow rates as a function of nozzle, orifice, and tube size. The results of these calibration tests are presented in Figures 4-1, 4-2, and 4-3 of Appendix D. After the flow calibration was complete, fire tests were conducted in the engine installation with the discharge tee and nozzles positioned in the forward section of Zone II at 3:30 o'clock as shown in Figure 5-1 of Appendix E. The discharge was directed annularly over and under the engine case.

The flow calibration tests consisted of short duration discharges of LN_2 during which time, mass flow rates, and distribution system temperatures and pressures were measured. The test procedure consisted of spark igniting the fuel spray at nozzle location B, shown in Figure 5-1 of Appendix E, and a 10-second duration discharge from the 1-inch-diameter LN_2 system. The bleed airflow was maintained between 1.7 and 1.9 pounds per second. The surveillance-type, radiation sensing, flame detector was utilized to determine whether the fire was extinguished and the time of extinguishment. The minimum LN_2 flow rate required for extinguishment was determined for controlled amounts of flashing up to 19 percent, on a weight basis, at the discharge tee.

Results: The results of the tests in this series (Nos. 1 through 40) are summarized in Table 2, Figure 9, and Appendix D, Figures 4-1 through 4-3. The liquid lost due to the flashing of liquid nitrogen, shown in Table 2 and Figure 9, was calculated from a temperature-entropy diagram prepared by the National Bureau of Standards. The pressure readings given in Table 2 are for a period three seconds after LN_2 discharge, which was the nominal time required for flow stabilization to occur.

A comparison of the nitrogen discharge rates at the various degrees of flashing shown in Table 2, indicates that the pressure losses and flashing of LN_2 in the distribution system did not substantially affect the discharge rate requirements for extinguishing the fire. At nitrogen discharge rates above 1.05 pounds per second, all the fires were extinguished regardless of the amount of flashing. Conversely, at rates less than 1.05 pounds per second, none of the test fires were extinguished. As would be expected, the amount of flashing did substantially affect the nitrogen discharge rate. As the percent lost by flashing increased from two percent to 16 1/2 percent, the nozzle size required to allow sufficient flow for extinguishment increased from 0.24 to 1.12 square inches.

Figure 9 shows the calculated mass flow of nitrogen per unit nozzle area as affected by the amount of flashing that occurs within the distribution system. This figure shows the least squares fit in the form of an exponential function for the combined data from the tests with 1/2-, 3/4-, and inch tube systems.

The system response was not substantially affected by the amount of flashing. All the fires were extinguished in a 3-to-7 second period after initiating the LN_2 system discharge regardless of the quality of the nitrogen.

TABLE 2. - EFFECT OF PRESSURE LOSSES AND FLASHING ON LN_2 SYSTEM REQUIREMENTS

Test No.	A_n	Liquid Lost by Flashing	P_1 (at 3 sec) (after discharge)	P_n (at 3 sec) (after discharge)	$\dot{W}_{LN_2}$	Time Fire Ext.
	(in2)	(%)	(psig)	(psig)	(lb/sec)	(sec)
31	0.138	1.5	103.0	101.5	1.02	Non-Ext.
32	0.240	2.5	100.0	94.0	1.76	4.3
33	0.186	2	87.5	83.3	1.26	6.1
34	0.368	11.5	54.5	45.0	1.09	6.6
35	0.138	7.5	57.0	56.5	0.51	Non-Ext
36	0.240	6	70.5	61.5	1.06	6.7
37	0.240	7	59.5	55.8	0.91	Non-Ext
38	1.118	16.5	45.3	21.5	1.16	3.4
39	0.582	15.5	37.5	25.0	0.91	Non-Ext
40	1.118	18.5	31.5	13.5	0.91	Non-Ext

Effect of Fire Size

Objective: The objective of this effort was to determine the effect of the amount of fuel on the fire size and the LN_2 requirements. The basic concept used throughout the portion of the investigation, in which LN_2 was used to extinguish fires on the test engine installation, was to create a large, severe

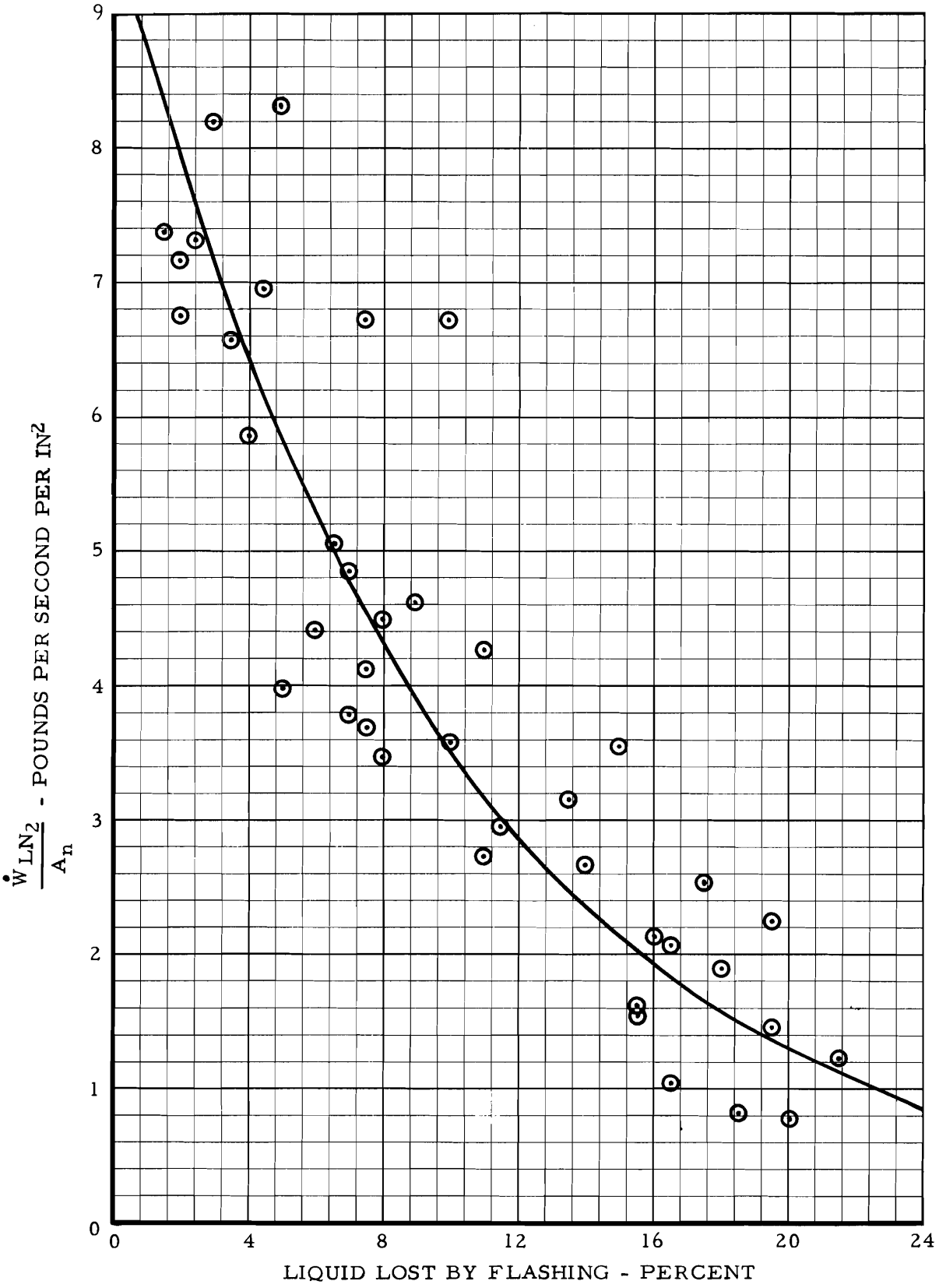

FIGURE 9 LIQUID NITROGEN DISCHARGE RATE AS A FUNCTION OF FLASHING IN THE DISTRIBUTION SYSTEM

fire requiring maximum quantity of LN_2 without causing extensive damage to the nacelle. This was accomplished by minimizing the duration of the fire and increasing the flow of fuel to the fire until the LN_2 requirements for extinguishment no longer increased.

Method: The investigation to determine the effect of the amount of fuel on the fire size and the LN_2 requirements was conducted in Zone II of the test engine installation with a nominal bleed airflow of 2.5 pounds per second. The nitrogen was saturated at 100 psig, plumbed through 21 feet of 1-inch tubing, and discharged through a standard AN-824 bulkhead tee fitting. The tee was positioned in the forward section of the Zone at 3:30 o'clock to direct the discharge annularly over and under the engine case.

The test procedure consisted of spark igniting the fuel spray at nozzle location B, with the engine operating at military rated thrust (MRT). The engine was retarded to cutoff 5 seconds after initiating the fuel release. This was followed 10 seconds later with a 10-second duration discharge from the LN_2 system. A radiation sensor was utilized to determine whether the fire was extinguished and the time of extinguishment. The minimum LN_2 flow rate required for extinguishment was determined for fuel flows ranging from 0.1 to 0.7 gallon per minute (gpm).

Results: The results of the eight tests in this series are summarized in Table 3.

The time listed for each test in which the fire was extinguished is the period between initiating the LN_2 system discharge and the clearing of the radiation sensor. The fuel flow rate is seen to have affected the discharge rate of nitrogen required for extinguishing the test fires. As the fuel flow was increased from 0.1 to 0.3 gpm, the nitrogen discharge rate requirements increased, and unburned fuel started to accumulate within the compartment. As the fuel flow was increased beyond this point, burning occurred outside the compartment at a location downstream of the top air exit louvers, and the required nitrogen discharge rate no longer increased. As a result of this test series, all remaining fire testing with bleed air flowing into Zone II of the test nacelle at rates above 1.5 pounds per second were normally conducted with a fuel-to-fire flow of 0.3 gpm. Similarly, because of unburned fuel accumulations and external fire with 0.3 gpm fuel flows at bleed airflows below 1.5 pounds per second, remaining tests in this airflow range were normally conducted with 0.1-gpm fuel flows.

TABLE 3. - EFFECT OF FUEL-TO-FIRE FLOW RATE ON LN_2 FLOW RATE REQUIREMENTS

Test No.	Fuel Flow W_F	Liquid Nitrogen Flow W_{LN_2}	Time Fire Extinct
	(gpm)	(lb/sec)	(sec)
41	0.1	1.45	4.2
42	0.1	1.22	6.0
43	0.1	0.91	Non-Ext
44	0.3	1.15	Non-Ext
45	0.3	1.33 (Ext at 4.8, Flashed back at 12.8)	Non-Ext
46	0.3	1.38	3.6
47	0.5	1.33	5.8
48	0.7	1.42	3.5

A Comparison of Gaseous Nitrogen and Liquid Nitrogen

Objective: The specified objective of this phase of the project was to determine the effectiveness of GN_2 as compared to LN_2 in extinguishing fires. However, an extensive failure of the test equipment caused the cancellation of this designated objective and no data were obtained.

Alternate Objective: The alternate objective of this phase was to study the effects of long distribution lines and discharge valve location on the LN_2 requirements. The tests were conducted in the Five-Foot Fire Test Facility using the JT-12 installation as the test article. Standard turbine engine and wind-tunnel instrumentation were utilized to record the JT-12 and tunnel facility operational parameters during the tests.

Method: A long line distribution system was fabricated from 1-inch-outside diameter tubing with a 0.040-inch wall thickness. A line length of 80 feet was selected to approximate the tubing required between a dewar mounted in the center of the fuselage and the outboard nacelle of a typical large transport aircraft. Open-end tee discharge nozzles were used for the tests. In addition to the electrically operated discharge valve, located as shown in Figure 5, a manually operated ball valve was located in the system approximately 5 feet from the nacelle discharge nozzle. The distribution system configuration and instrumentation, with the exception of the manual ball valve, are shown in Figure 6 as "LN_2 Distribution System 2."

A total of 8 tests was conducted with the 80-foot lines. For seven of these tests, the electrically operated valve at the dewar was opened, and the line from the dewar to the closed manually operated valve was filled with GN_2, at the dewar saturation pressure, approximately 5 minutes before discharge. The manual valve was then used to discharge the agent for the test. For the eighth test, the manual valve was placed in the open position, and the discharge was controlled by the electrical valve at the dewar, thus leaving the long line unpressurized.

For all tests in this series, Test Event Schedule E was utilized, as described in Appendix C. At the time of LN_2 discharge, the engine power level was at cutoff and the compressor interstage bleed ports were open. The test section Mach number was stabilized at 0.50, and the fuel flow to the fire was 0.30 gpm. The nominal secondary airflow within the nacelle was 3 pounds per second.

Results: A tabular record of Tests Nos. 241 through 252 inclusive, is presented in Appendix B. A comparative time versus event illustration of several of the pressurized 80-foot lines with the discharge valve near the discharge point, the unpressurized 80-foot line with the discharge valve at the dewar, and a typical unpressurized 21-foot line with the discharge valve at the dewar is presented in Figure 10. Comparison of the pressurized 80-foot lines with the valve near the discharge point and the unpressurized 80-foot line with the valve at the dewar shows little significant difference in the time from "LN_2 ON" to "FIRE OUT." Comparing Tests Nos. 247, 249, and 250, which were all pressurized 80-foot lines with the valve near the discharge point, indicates that as the time from "IGNITION" to "LN_2 ON" (preburn time) increased, the time from "LN_2 ON" to FIRE OUT" (extinguishment time) also increased.

An event versus time schedule is also shown in Figure 10 for a typical 21-foot system having the discharge valve at the dewar, and test conditions similar to those for 80-foot lines. The time for extinguishment with the typical 21-foot line having a test fire preburn time of 14.2 seconds, was approximately one-third that of the 80-foot line having a test fire preburn time of 14.3 seconds (Test No. 250). The flow rate buildup to the nominal rate existing 2.5 seconds before and after "FIRE OUT" was also greater for the 21-foot line.

Figure 11 illustrates the time history of line pressures, temperatures, and dewar weight for the pressurized and unpressurized 80-foot lines with the discharge valves in different locations. For comparison, a similar history is presented for a similar unpressurized 21-foot length configuration with the valve at the dewar. This plot also indicates that the discharge and flow parameters are essentially the same for the pressurized and unpressurized 80-foot line configurations. A tabular presentation of time versus line pressures, temperatures, and dewar weight for selected runs in the 80-foot line length series of tests, and two comparable 21-foot line length tests is presented in Appendix F.

It should be noted that some difficulty was encounterd with the pressurized 80-foot line having the discharge valve near the discharge point. Possibly due to the combination of long-line length and support arrangement, system oscillation and vibration, and extreme temperature changes causing rapid contraction and expansion of system fittings, a fitting loosened during the testing causing the charged line to leak. Eventually pressure and LN_2 loss from the dewar would have occurred. This system did have a relatively large number of fittings; however, the number could be considered representative of the number found on a large aircraft with a similar line length. Hence, in service, the system with the discharge valve located remotely from the dewar would have the greater potential for possible system leaks.

The oscillograph records showed that, as the discharge tee outlets in the 1-inch 80-foot length lines were decreased from AN-834-16 fittings to -12 to -8 fittings, large sinusoidal pressure oscillations with a magnitude of 15-20 psi were recorded at the P_1 and P_2 probes. The smaller the outlet fitting, the greater was the duration and magnitude of the oscillations. The oscillations decreased in magnitude and frequency until they were dampened out after 13 seconds of the 20-second discharge. Little effect was noted in discharge rate due to these oscillations.

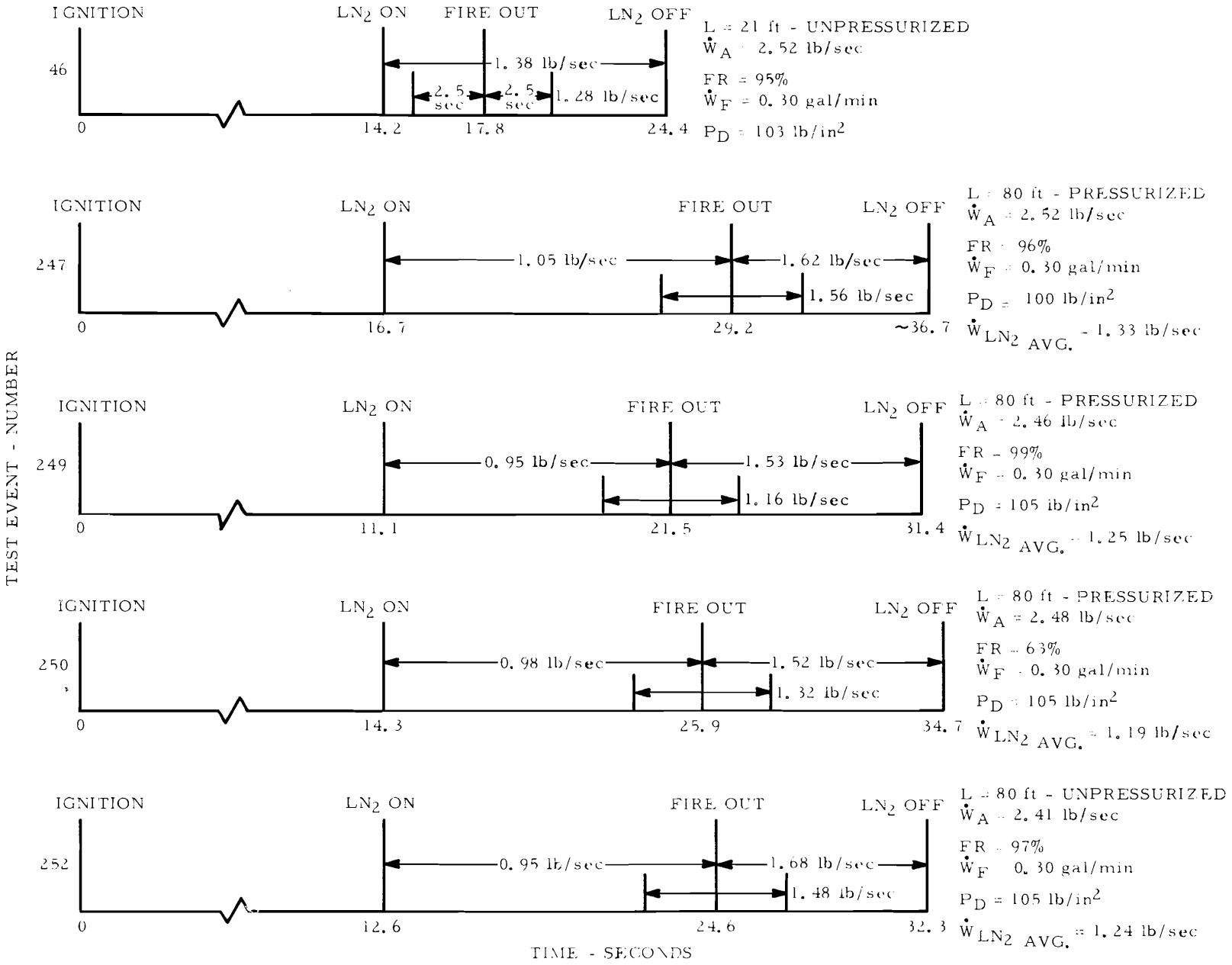

FIGURE 10 - HISTORY OF TEST EVENTS FOR 80-FOOT-LONG DISTRIBUTION LINES AND A COMPARABLE 21-FOOT-LONG DISTRIBUTION LINE

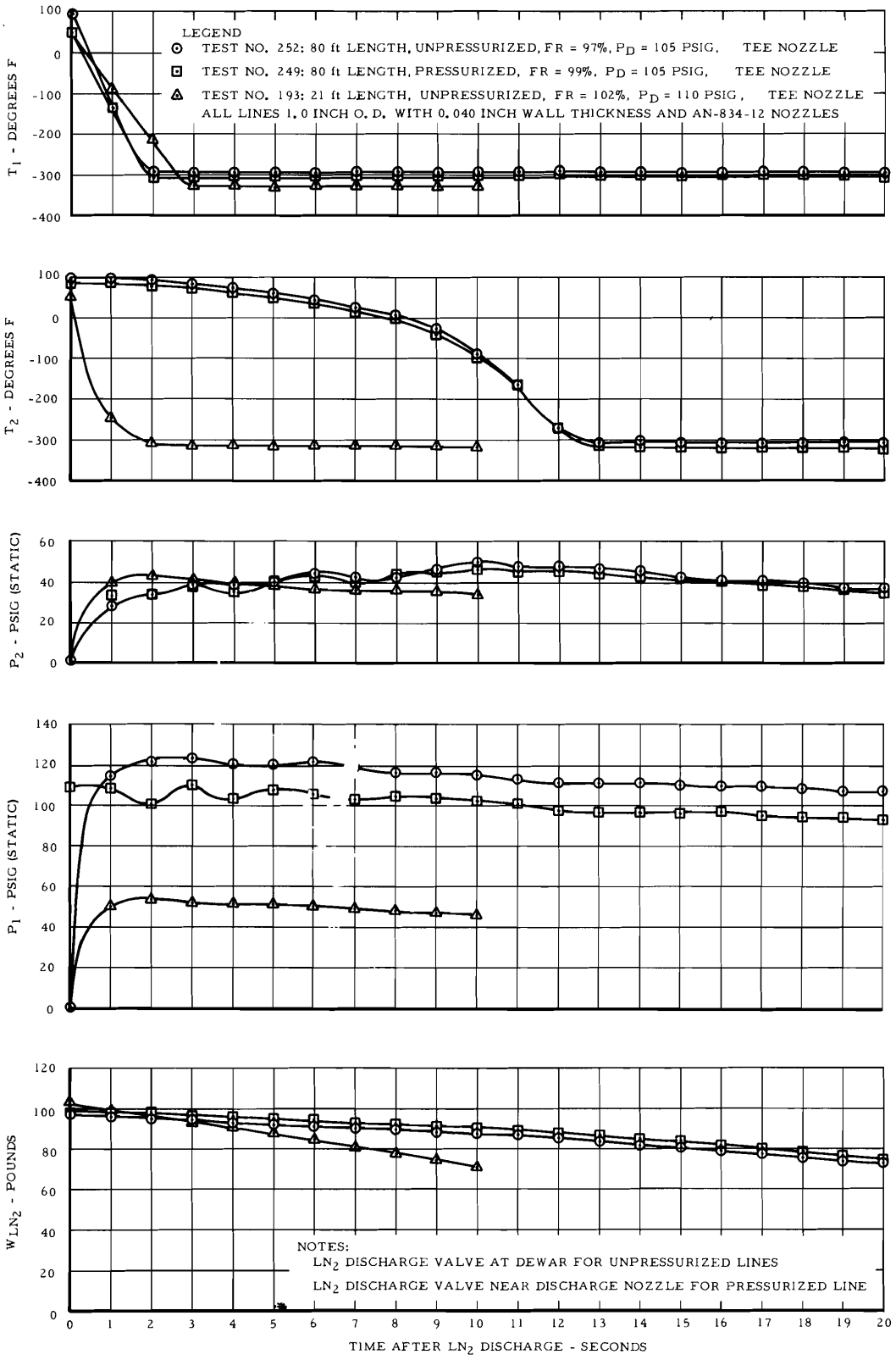

FIGURE 11 - DISTRIBUTION SYSTEM PRESSURES, TEMPERATURES, AND NITROGEN FLOW FOR AN 80-FOOT PRESSURIZED LINE AND 80- AND 21-FOOT UNPRESSURIZED LINES

Effect of Compartment Airflow

Objective: A large portion of this work was devoted to experimentally defining the nitrogen requirements for extinguishing fires as a function of compartmental airflow. This relationship was explored during the first phase of testing as reported in Appendix A. Testing under this initial phase involved spray releasing and spark igniting JP-4 jet fuel at a rate of 0.1 gpm. These tests were conducted with nitrogen being throttled to control the discharge rate. This resulted in large quantities of the nitrogen being converted to a gas in the distribution line. It had been theorized that the required discharge rates would be somewhat lowered if the nitrogen in the line was maintained in the liquid state (Appendix I, Reference 1). The test fires at the higher airflow were considered to have been burning lean, and it was expected that at higher fuel release rates, the required nitrogen discharge rates would increase. Therefore, additional tests were scheduled during the second phase of testing to supplement the initial data by increasing both the fuel flow and the airflow, and by maintaining liquid flow in the discharge line during tests with low nitrogen flow rates. At the same time, tests were also scheduled to investigate the effects of the type of discharge and the compartmental volume on the relation between nitrogen fire-extinguishing requirements and compartmental airflow.

Method: This phase of the investigation involved fire tests in the JT-12 installation and the 40- and 53-cubic-foot simulated nacelle installation. The 21-foot 1-inch tube nitrogen distribution system was utilized with discharge through either the AN-834 nozzles or the perforated tube.

The test procedure consisted of spark igniting the fuel spray at nozzle location B in the JT-12 installation and a comparable location in the simulated nacelle. In the JT-12 installation, the engine power was retarded from military rated thrust (MRT) to cutoff 5 seconds after initiating the fuel release, and 10 seconds prior to discharging the nitrogen. The fan power and airflow for the simulated nacelle were maintained constant throughout each test run. The duration of the discharge from the LN_2 extinguisher system was 10 seconds for all the tests in this series. As in previous tests, a surveillance-type radiation sensor was utilized to determine the time of extinguishment. The minimum LN_2 flow rate required for extinguishing the test fires was determined at various airflow rates up to a maximum rate of 9 pounds per second.

Results: The results of the tests in this series are summarized in Figures 12 and 13. The airflow rate, shown in Figures 12 and 13, is seen to have substantially affected the discharge rate requirements of nitrogen for extinguishing the fires in each of the three different volume compartments and with the two types of discharges. The required nitrogen flow rate increased in direct proportion to the JT-12 compartment bleed airflow. Figure 13 shows the least squares fit in the form of an exponential function for the combined data from the tests with 40- and 53-cubic-foot volume configurations of the simulated nacelle using both open-tube nozzle and perforated tube-type discharges. Variations in the volume size and type of discharge did not affect the nitrogen flow rate requirements substantially from the least squares curve. The differences between the linear relationship, shown in Figure 12, and the exponential relationship, shown in Figure 13, are attributed to the non-uniform airflows and possible inadequate nitrogen distribution in the simulated nacelle at the high airflow rates.

Effect of LN_2-Induced Cooling

Objective: An objective of this work was to experimentally determine the effectiveness of a nitrogen fire-extinguishing system in post-fire cooling of the compartment and potential reignition sources. As determined in a previous investigation, long-duration fires may heat small exposed metal components of the engine and nacelle sufficiently to reignite the fuel after the extinguishing agent dissipates (Appendix I, Reference 2). These reignitions were further reported to be explosive when the quantity of extinguishing agent was marginal to the extent that a long-duration fire would be only momentarily extinguished. Therefore, an investigation was made to determine the feasibility of increasing the discharge rate and prolonging the duration of the discharge of a nitrogen fire-extinguishing system to force-cool components below the ignition temperatures of the flammable fluids present, and to keep the compartment inert while this cooling is taking place.

Method: The test engine installation was instrumented with thermocouples to measure ambient and metal temperatures within the accessory compartment. The metal components selected as being typical low-thermal mass items, found on powerplant installations, consisted of a continuous-type fire

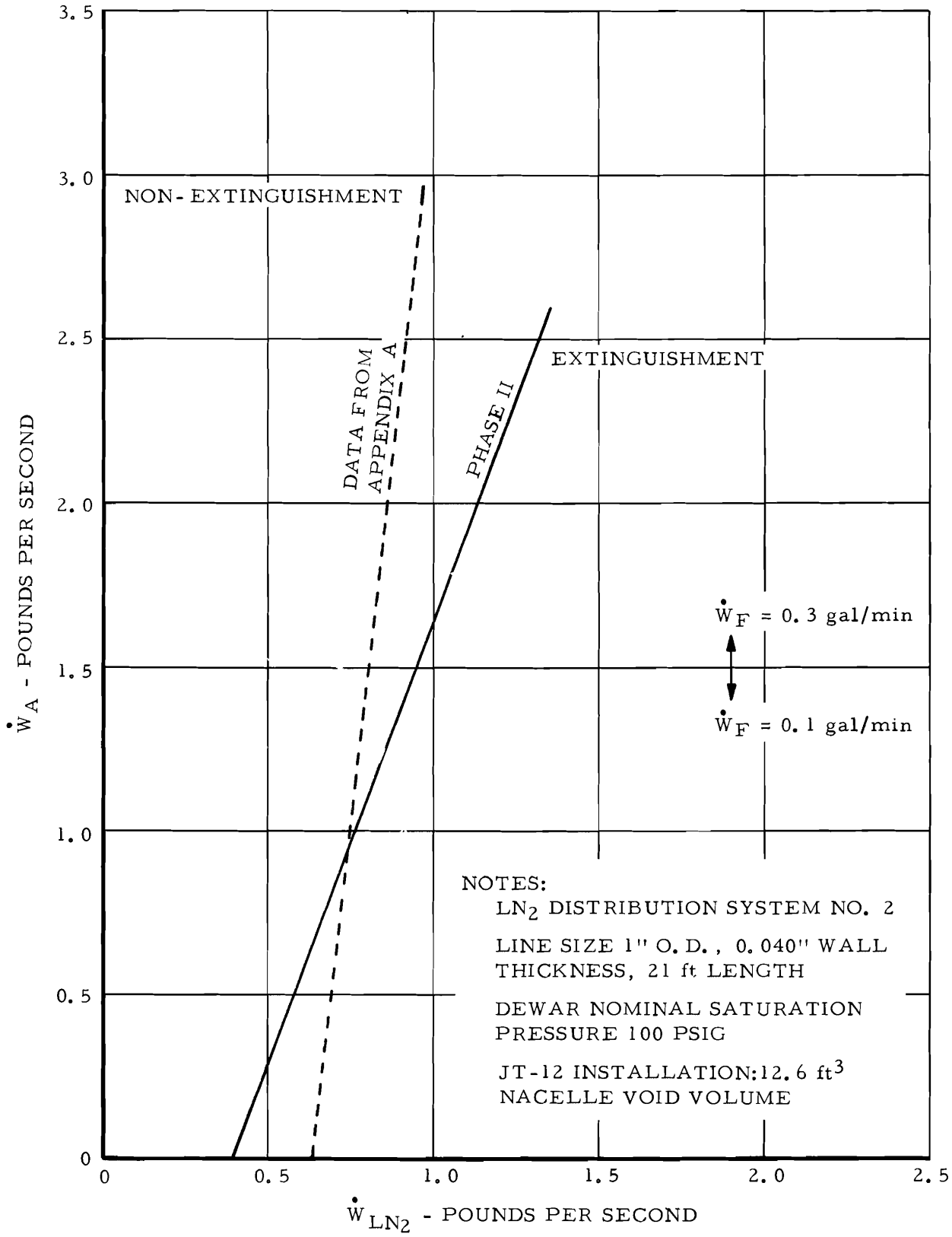

FIGURE 12 LN_2 FLOW REQUIREMENTS AS A FUNCTION OF COMPARTMENT AIRFLOW IN THE JET ENGINE INSTALLATION

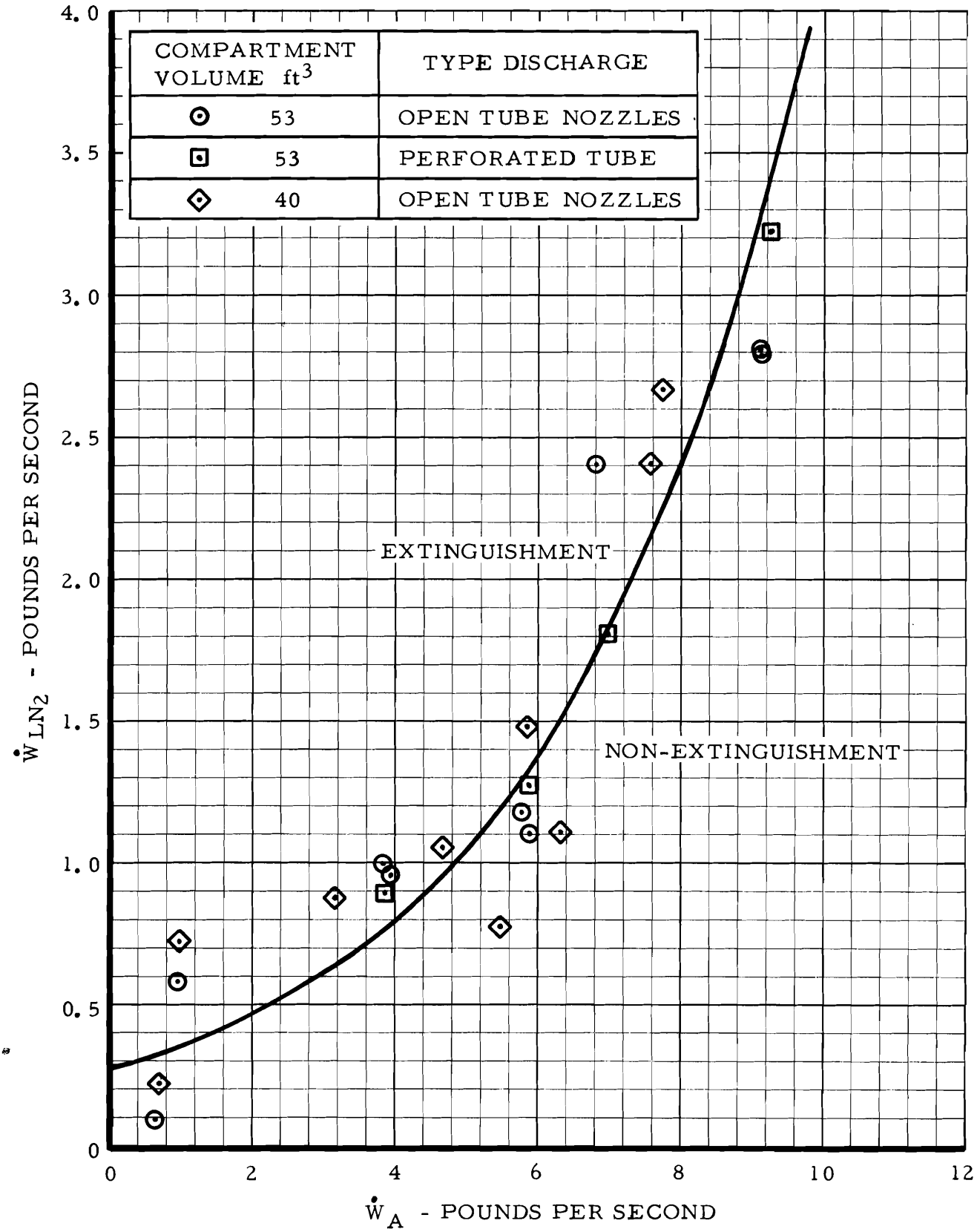

FIGURE 13 LN_2 FLOW REQUIREMENTS AS A FUNCTION OF COMPARTMENT AIRFLOW IN THE MOCKUP ENGINE/NACELLE FACILITY

detector element; 0.041-inch-diameter, twisted, stainless steel, safety wires; and a door-latch bracket. These components were remotely located relative to the nitrogen outlets and were in the immediate vicinity of the fire. The nitrogen distribution system utilized for this series of tests consisted of a 21-foot length of 1-inch tubing with two open-tube discharge nozzles.

The test procedures followed consisted of spark igniting the fuel spray at nozzle locations B, B*, or C, as shown in Figure 5-1 of Appendix E. The engine was retarded from MRT to cutoff 5 seconds after initiating the fuel release. For tests involving a nitrogen discharge, this was followed 10 seconds later with a discharge from this nitrogen system of 9- to 14-seconds duration. In order to determine the degree of cooling resulting from the air entering the compartment and from the nitrogen, tests involving metal temperature measurements were duplicated with and without nitrogen discharges. The fuel flow was reduced to 0.03 gpm for these tests so the fire would self-extinguish as the fuel was shut off. At higher fuel flows, the fire would relocate away from the instrumented components and continue to burn after fuel shutoff.

Results: As shown in Figure 14, significant cooling was apparent during the nitrogen discharges. The measured ambient temperature resulted from a 1-pound-per-second discharge of nitrogen, initiated at zero time, into the fire environment of the test engine installation. The rapid decay in the ambient temperature is typical of the effect that the extinguishment of a fire with a nitrogen discharge has on the ambient environment in an area of a compartment remote to the location of the discharge nozzles. As would be expected, the temperatures in the area of the nitrogen outlet decreased at a higher rate, and to a lower level, during the discharge.

The metal components were likewise substantially cooled by the nitrogen. As shown in Figure 15, the twisted safety wire was heated to temperatures from 1400° to 1640°F during three test fires. In the first test, the fuel-to-fire was shut off, and the wire cooled from 1400° to 500°F in 13 seconds. The 500°F temperature is considered to be a relatively safe temperature from the standpoint of ignition

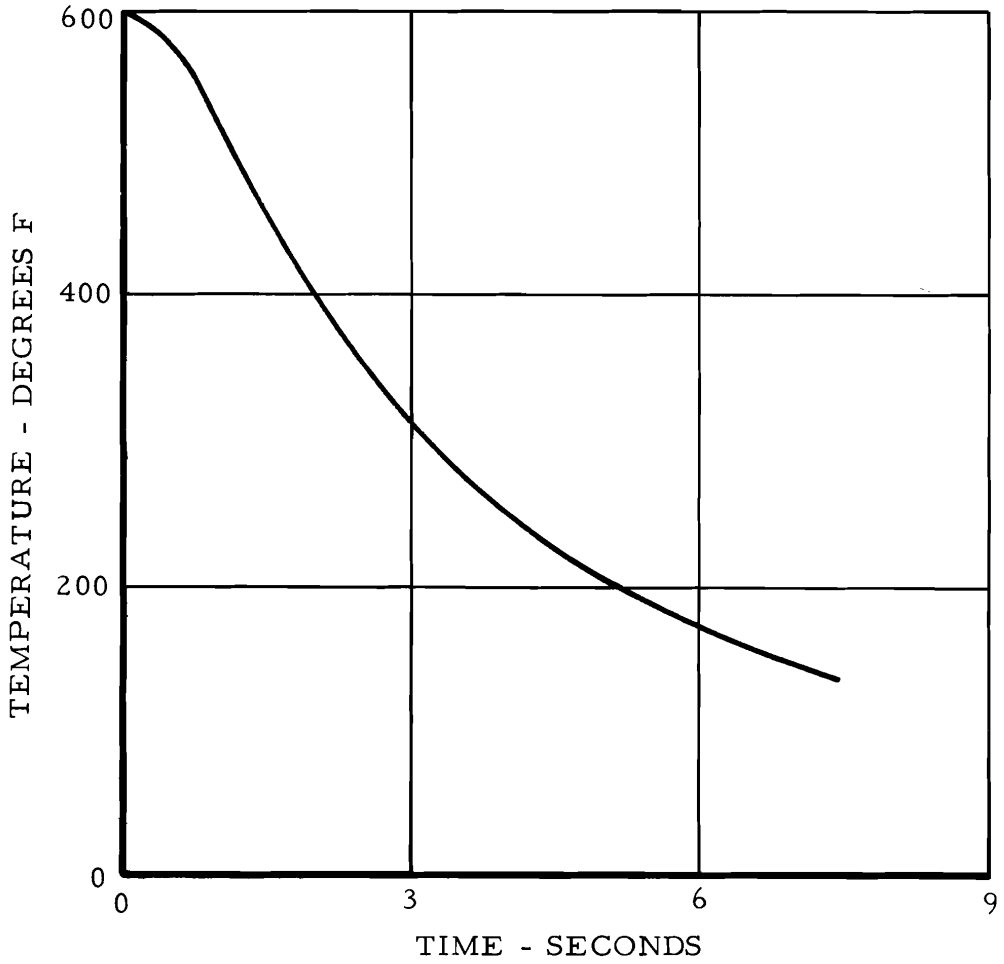

FIGURE 14 AMBIENT TEMPERATURE IN JET ENGINE INSTALLATION DURING NITROGEN DISCHARGE

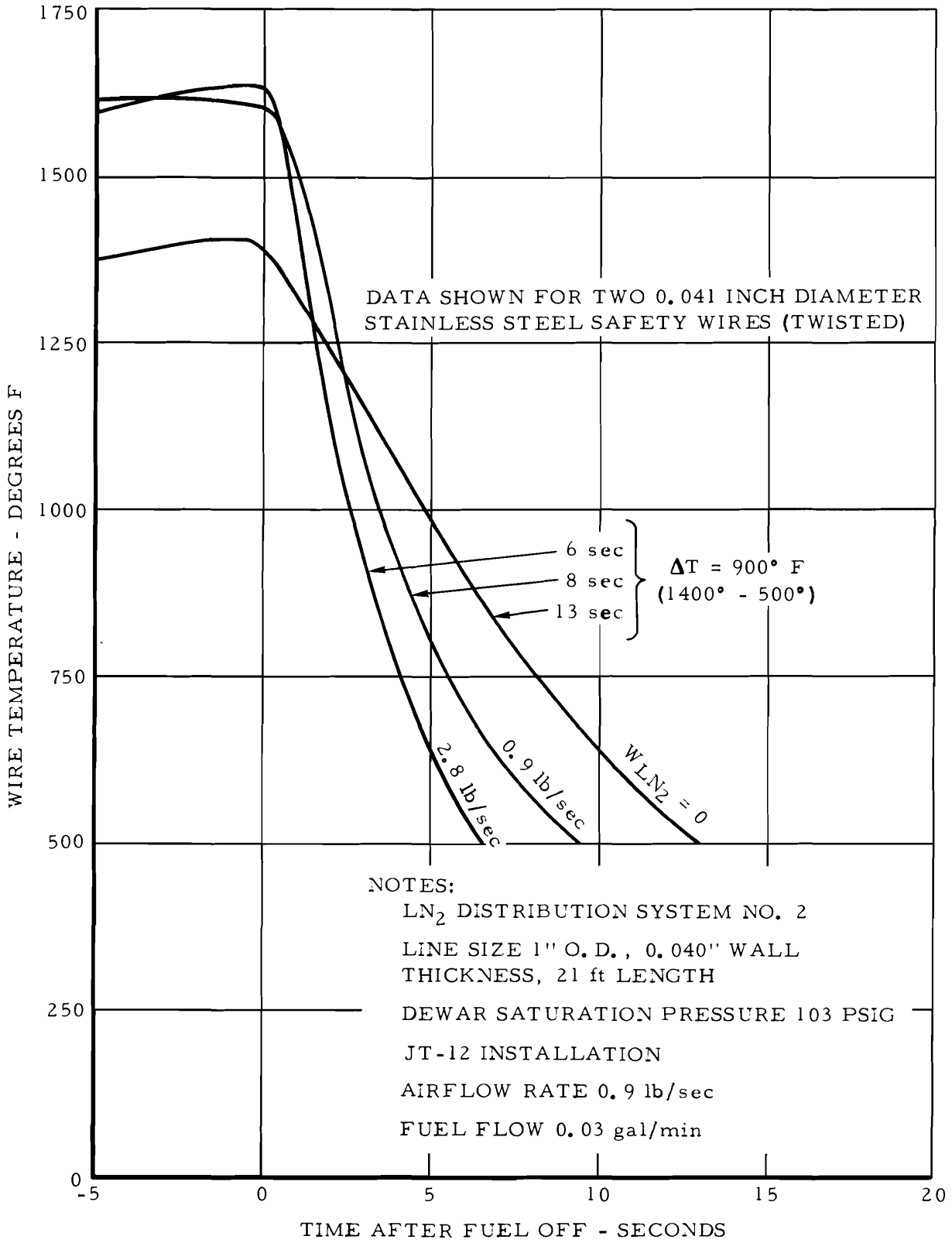

FIGURE 15 TEMPERATURE DECAY OF TWISTED SAFETY WIRE WITH AND WITHOUT NITROGEN DISCHARGE

of fuel vapors. In the next two tests, the nitrogen was discharged at 0.9 and 2.8 pounds per second. The times required for the wire temperature to decrease from 1600° to 500°F were 9.4 and 6.5 seconds for the low and high nitrogen discharge rates, respectively. In addition to the possible elimination of potential reignition sources prior to the end of the discharge, this cooling is considered to be beneficial in decreasing the rate at which remaining fuel in the compartment is vaporized. An item which makes the nitrogen cooling effect more significant is the fact that the fire-extinguishing systems in use on current aircraft may dissipate the agent in a half second after reaching the concentration required to extinguish a fire. With normal cooling, the temperature of the safety wires a half second after the fire was self-extinguished was lowered 80° to 1320°F. In the case of the nitrogen extinguishing system, it is possible that with the availability of large quantities of nitrogen for fuel tank inerting, the discharge duration could be prolonged for 30 seconds or longer to assure that all hot surface reignition sources are eliminated, and to allow for the dissipation of fuel vapors.

Effect of Inadvertent LN_2 Discharge

Objective: An operating turbojet engine was selected for evaluating the effectiveness of cryogenic nitrogen as an agent for aircraft powerplant fire-extinguishing systems in order that the thermal effects on the engine and nacelle components could be observed. In addition to the effects of a discharge with the engine shut down according to fire emergency procedures, there was concern about the thermal effects of an inadvertent nitrogen discharge while the engine was operating.

Method: Special tests were not performed to evaluate the thermal effects of extinguishing nacelle fires with a cryogenic nitrogen system. This information was obtained during tests on the JT-12 installation, which were designed for other specific program objectives. The effects of an inadvertent discharge were limited to tests in which an operating engine fuel pump was thermally shocked by large quantities of nitrogen. A single-gear-type fuel pump with a centrifugal booster from a JT-4 engine was mounted in a closed cubical compartment 20 inches in length on each side. The pump was connected to a 20-horsepower electric motor located outside the compartment. The primary materials used in the pump are nitralloy steel for the gears and shafts, lead-bronze for the bearings, and 355T6 aluminum for the housings.

The pump was operated at 3450 rpm with a discharge pressure of 470 psig and a delivery rate of 36 gpm. The nitrogen was distributed through 21 feet of 1-inch tubing and discharged through an open-end tube into the compartment. Four positions were selected for the discharge tube, with three of these positions selected so the nitrogen would impinge directly on critical areas of the pump. The first position directed the nitrogen onto the floor of the compartment so that the nitrogen did not directly impinge on the pump. The three remaining positions were directed to impinge the nitrogen on the pressure regulator housing, the booster element housing, and the spur-gear type element housing, as shown in Figure 16. The pump was instrumented with surface thermocouples at each of the three impingement locations on the pump. The compartment ambient temperature, pump discharge temperature, and fuel flow and pressure, were also measured and recorded. The current flow to the drive motor was measured for an indication of any pump seizure during the nitrogen discharge.

The procedure for these tests consisted of operating the pump until the outlet conditions stabilized. The nitrogen was then discharged from a full dewar, saturated at 100 psig, into the compartment with the pump operating. The discharges lasted from 40 to 46 seconds and expended from 60 to 76 pounds of nitrogen at rates from 1.4 to 1.7 pounds per second.

Results: The results of the four fuel pump tests are summarized in Table 4. In each test, the pump continued to operate without any apparent adverse effects. The fuel flow and discharge temperature did not measurably change during the tests. The pump outlet pressure showed only minor fluctuations of 10 to 20 psig. The amperage measurements showed a gradual increase of from 1 to 2 amperes during the first three tests and of 6 amperes during the last test with the nitrogen impinging on the gear housing. During the first and second tests, a short duration (less than 1 second) current surge of 2 amperes was recorded, respectively, at 38 and 31 seconds into the nitrogen discharges. In all four tests, the current returned to a normal level shortly after the nitrogen discharge was terminated, and the pump continued to operate satisfactorily.

The JT-12 engine installation was subjected to nearly 100 nitrogen discharges in extinguishing fires during the two phases of this program. As much as 50 pounds of nitrogen were discharged into the accessory compartment during a single test at rates as high as 3.2 pounds per second, and for durations from 3 to 20 seconds. There were no observed failures or deteriorations of the engine and nacelle components throughout the program which could be directly attributed to the thermal effects of the cryogenic nitrogen fire extinguisher-system.

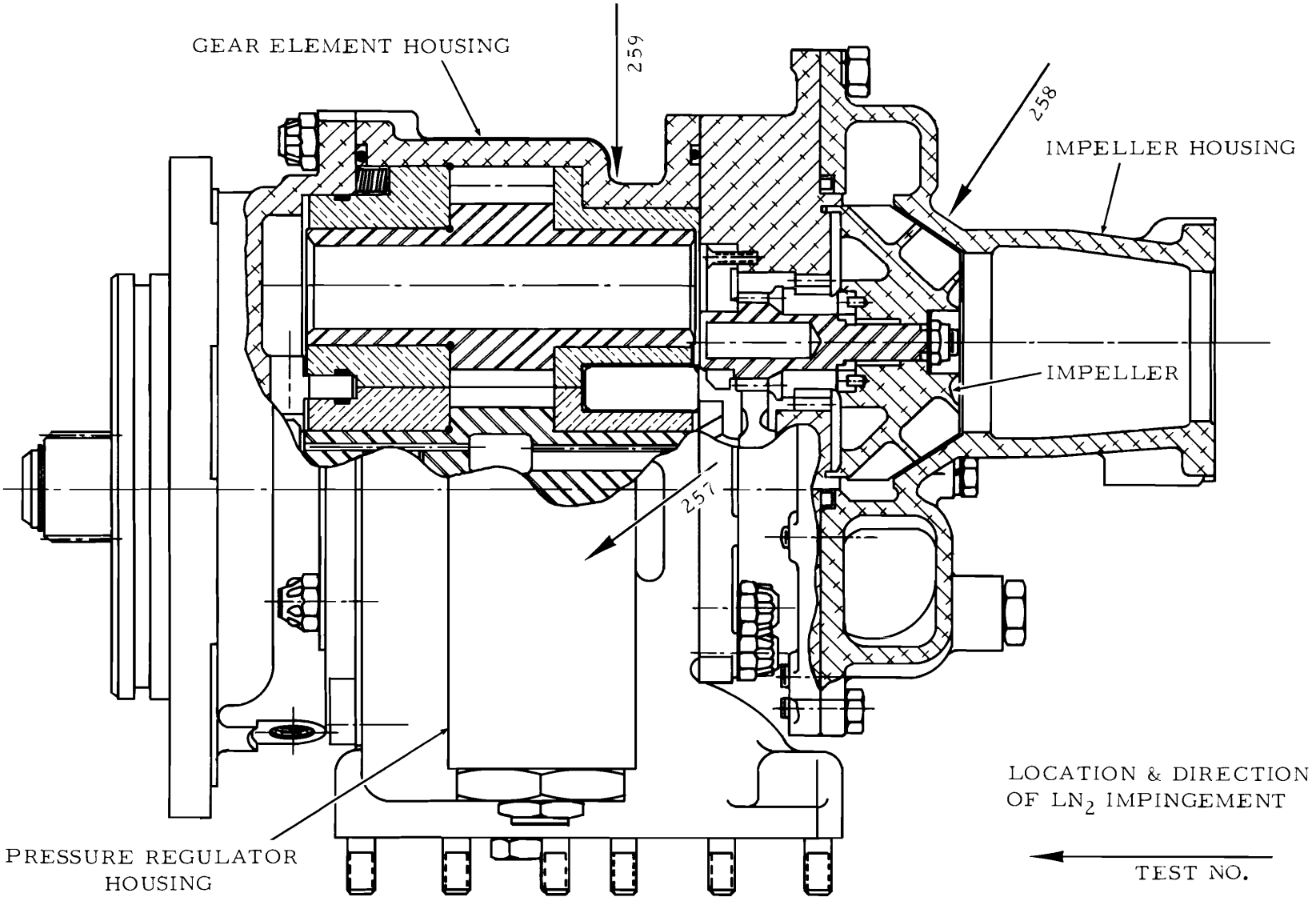

FIGURE 16 LOCATION OF LN_2 IMPINGEMENT ON TYPICAL TURBINE AIRCRAFT FUEL PUMP

TABLE 4. - RESULTS OF LN_2 DISCHARGE ON TYPICAL TURBINE AIRCRAFT FUEL PUMP

Time (sec)	T_{amb} (°F)	T_{case} (°F)	Drive Motor Current (amp)	W_{LN_2} (lb)
	TEST 256 (Compartment Floor)			
0	84	79	49.3	0
10	-170	42	50.2	16.8
20	-279	38	50.8	32.8
30	-317	30	51.0	50.4
38.3	---	--	53.0	---
40	-320	20	51.1	66.8
45.5	END of LN_2 DISCHARGE			75.7
	TEST 257 (Pressure Regulator)			
0	75	96	50.3	0
10	36	NR*	50.5	13.2
20	-270	NR	50.6	27.0
30	-293	NR	51.2	41.0
30.1	---	NR	53.3	----
40	-304	NR	50.8	54.8
44.7	END of LN_2 DISCHARGE			
	TEST 258 (Impeller Housing)			
0	65	64	49.5	0
10	-188	43	50.2	14.6
20	-288	41	51.0	30.6
30	-315	42	51.1	46.6
40	-320	12	51.5	62.4
44.2	END of LN_2 DISCHARGE			
	TEST 259 (Gear Housing)			
0	NR	+79	49.7	0
10	NR	NA**	54.5	15.0
20	NR	NA	55.7	29.6
30	NR	NA	54.2	45.4
39.8	NR	NA	54.6	60.0
39.83	END of LN_2 DISCHARGE			

* NR - Not Recorded
** NA - Not Applicable

Effect of Damaged Cowling

Objective: The objective of this effort was to determine the effectiveness of an LN_2 system in extinguishing fires after the powerplant installation had been damaged by a fire, and the compartment was no longer intact. The criteria used in the design and evaluation of conventional powerplant fire-extinguishing systems is that the protected compartment will be intact at the time the system is utilized. A previous FAA project effort indicated that a fire which is not rapidly detected and extinguished may produce abnormally high air leakage into the compartment or may create openings at seams, seals, or near normal air exits (Appendix I, Reference 2). Therefore, an investigation was conducted to determine the effects of high localized inflows of air and large openings in the cowling on the requirements of an LN_2 fire-extinguishing system. The investigation would provide information necessary to determine the feasibility of furnishing addtional protection, in the event of such a failure, by providing additional quantities of LN_2 from the normal supply expected to be available on large aircraft.

Method: The fire damage to the nacelle was simulated by two separate methods: (1) the starter/generator cooling air duct in the accessory compartment of the JT-12 installation was disconnected to allow ram air into the compartment through the 3-inch-diameter duct, and (2) a 3.9- by 3.5-inch rectangular, static-type opening was made in the cowl door at station 90 at 5:30 o'clock, where the external nacelle pressure was equal to a static pressure corresponding to the tunnel's pressure altitude. The 21-foot-long, 1-inch-tube nitrogen distribution system was utilized with the two open-tube discharge nozzles to extinguish the fires in the damaged nacelle.

The test procedures followed consisted of spark igniting the fuel spray at nozzle location B. The engine power was retarded from MRT to cutoff 5 seconds after initiating the fuel release and 10 seconds prior to discharging the nitrogen. The duration of the discharge from the LN_2 system was 10 seconds. The minimum LN_2 flow rates for extinguishing the fires were determined for a normal nacelle configuration, a damaged nacelle with approximately 3/4 pound per second of air entering the compartment from the disconnected cooling air duct, and a damaged nacelle simulating a burned-out area exposed only to static-pressure differentials. The bleed airflow was maintained at approximately 2 1/2 pounds per second for all three nacelle configurations. The fuel-to-fire flow was increased from 0.3 to 0.5 gpm for the tests with the disconnected cooling air duct in an attempt to

create a condition where the fire was not burning lean and, as previously discussed, the fire size was of sufficient intensity to require a maximum amount of nitrogen for extinguishment.

Results: Table 5 summarizes the results of the tests in this series. The localized high air leakage from the 3-inch duct entered a 9 o'clock position in the forward section of the compartment with a downward directed flow. The air discharged from this duct was approximately 30 percent, by weight, of the air entering the compartment from the bleed air system. This 30-percent increase in airflow resulted in an approximate 14-percent, by weight, increase in the nitrogen flow rate requirements when compared to the undamaged nacelle nitrogen fire extinguishing requirements.

TABLE 5. - EFFECT OF SIMULATED DAMAGED COWLING ON NITROGEN FLOW REQUIREMENTS

Test No	Bleed Air Flow (lb/sec)	Ram Air Flow (lb/sec)	Total Air Flow (lb/sec)	$\dot{W}_{LN_2}$ (lb/sec)	Time Fire Extinct (sec)
STARTER/GENERATOR COOLING AIR DUCT DISCONNECTED					
235	2.28	0.70	2.98	2.23	1.50
236	2.50	0.71	3.21	1.05	Non-Ext
237	2.31	0.75	3.06	1.46	1.70
238	2.42	0.69	3.11	1.45	3.35
239	2.39	0.69	3.08	1.21	Non-Ext
240	2.43	0.70	3.13	1.30	Non-Ext
NORMAL NACELLE CONFIGURATION					
241	2.64	----		1.15	Non-Ext
242	2.43	----		1.45	4.29
243	2.36	----		1.36	5.07
244	2.48	----		1.27	4.58
SIMULATED BURN-OUT IN NACELLE COWLING					
253	2.48	----		1.79	3.48
254	2.49	----		1.60	5.01
255	2.50	----		1.35	Non-Ext

Although compartmental pressure measurements did not indicate a substantial increase in the compartment airflow, the airflow pattern, as evidenced by a change in the flame path, was changed when the nacelle was modified to simulate a burned-out area in the bottom aft portion of the compartment. This modification resulted in a 22-percent increase in the required weight rate of nitrogen discharged into the nacelle when compared to the undamaged nacelle nitrogen fire extinguishing requirements.

Effect of Installation Volume and Type Discharge

Objective: The objective of this portion of the project was to determine the effects of (a) compartment volume, and (b) type of discharge on the quantity of LN_2 required to extinguish fires.

Method: The majority of these tests were conducted in the Mockup Engine/Nacelle Facility. A number of applicable tests undertaken for other phases of the project were conducted in the Five-Foot Fire Test Facility.

The applicable tests in the Five-Foot Fire Test Facility were conducted using the standard JT-12 engine and nacelle with a 12.6-cubic-foot void volume within the nacelle. Standard turbine engine and wind tunnel instrumentation were utilized to record the JT-12 engine and tunnel facility operational parameters during the tests.

Tests Nos. 70 through 203, inclusive, were conducted in the Mockup Engine/Nacelle Facility. The basic facility is illustrated in Figure 8. To create a variable volume compartmentized test section and to control the airflow, a circular steel baffle was fabricated to fit the space between the inner cylinder wall and the outer cylinder wall. The baffle contained two rings of equally spaced 3/4-inch-diameter holes. The location of the facility test instrumentation and test equipment is shown in a plan view of the facility in Figure 17. For comparative purposes, the locations of the fuel-to-fire nozzle, ignitor, and LN_2 nozzle were selected to duplicate the corresponding locations in the JT-12 test engine installation. Facility design required that these locations be exactly opposite, as viewed from aft, as those in the JT-12 installation.

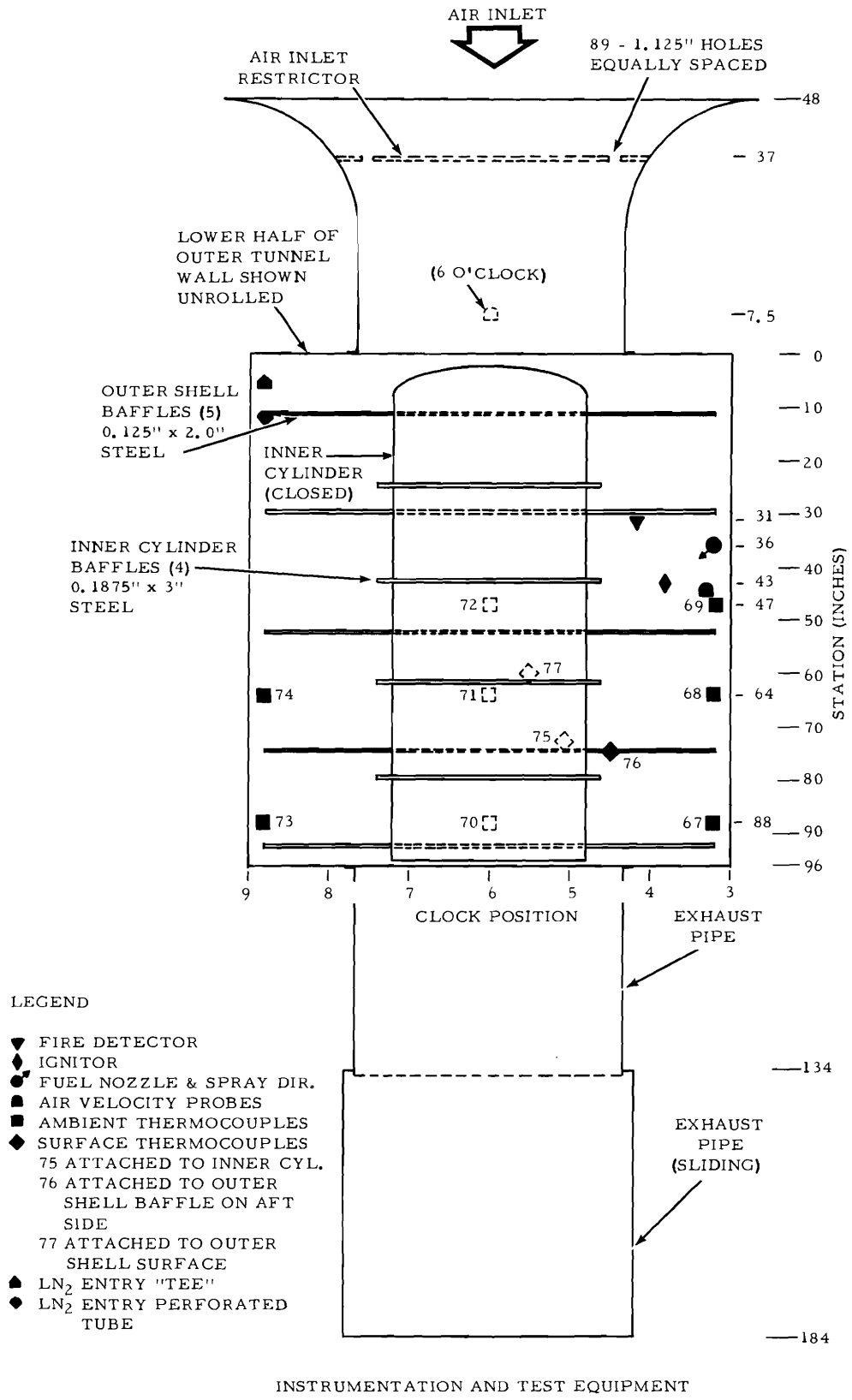

FIGURE 17 PLAN VIEW OF MOCKUP ENGINE/NACELLE FACILITY SHOWING INSTRUMENTATION AND TEST EQUIPMENT

The relative locations of the fuel and LN_2 nozzles with respect to each other were, however, the same for both facilities. A total of 12 thermocouples was installed, as shown in Figure 17. Eight of the thermocouples were used to record ambient air temperatures within the facility, and four of the thermocouples were used to record surface or skin temperatures of various metal samples within the facility. Test fire ignition and extinguishment were monitored by a radiation-type flame sensor as in the JT-12 installation.

The LN_2 distribution system was fabricated from 21 feet of 1-inch tubing with a 0.040-inch wall thickness and generally conformed to the Five-Foot Fire Test Facility system configuration. The distribution system and instrumentation are shown in Figure 6 as "LN_2 Distribution System 2." Discharge was controlled by an electrically operated valve located at the dewar. Two types of discharge nozzle, or system, were used within the test section. One type of nozzle was a standard AN bulkhead tee, directed to discharge in a vertical plane. The other system was a perforated loop welded shut at the end. The perforated loop installation and description are illustrated in Figure 18. The LN_2 distribution system and facility test section are shown in Figures 19 and 20.

Tests Nos. 70 through 75, inclusive, were conducted using Test Event Schedule D as described in Appendix C. This schedule included a 15-second airflow stabilization period in the test section prior to test fire ignition, a 20-second test fire preburn period prior to LN_2 on, and a 10-second LN_2 discharge. These tests were conducted without the aft baffle in place, thus creating an uncompartmentized "straight-through" test section. The average test section airflow was 10.3 pounds per second. Fuel flows were varied from 2.5 gpm at 42 psig, to 1.0 gpm at 55 psig, to 0.7 gpm at 40 psig. The LN_2 flow was varied from 1.8 to 4.0 pounds per second. All discharges were from AN-824 nozzles.

Following this series of tests, the aft perforated baffle was installed at Station 96, which is shown in Figure 17. This essentially created a definable nacelle-type compartment with a void volume of 53 cubic feet. Test section airflow was also effectively decreased. All remaining tests in this phase were conducted using Test Event Schedules, D, D_1 and D_2 as described in Appendix C.

Tests Nos. 76 to 119 and 182 to 197, inclusive, were conducted with AN-824 discharge nozzles. The fuel-to-fire flows tested were 0.1 gpm at 20 and 40 psig, 0.169 gpm at 50 psig, 0.7 gpm at 40 psig, and 1.0 gpm at 55 psig. Airflow

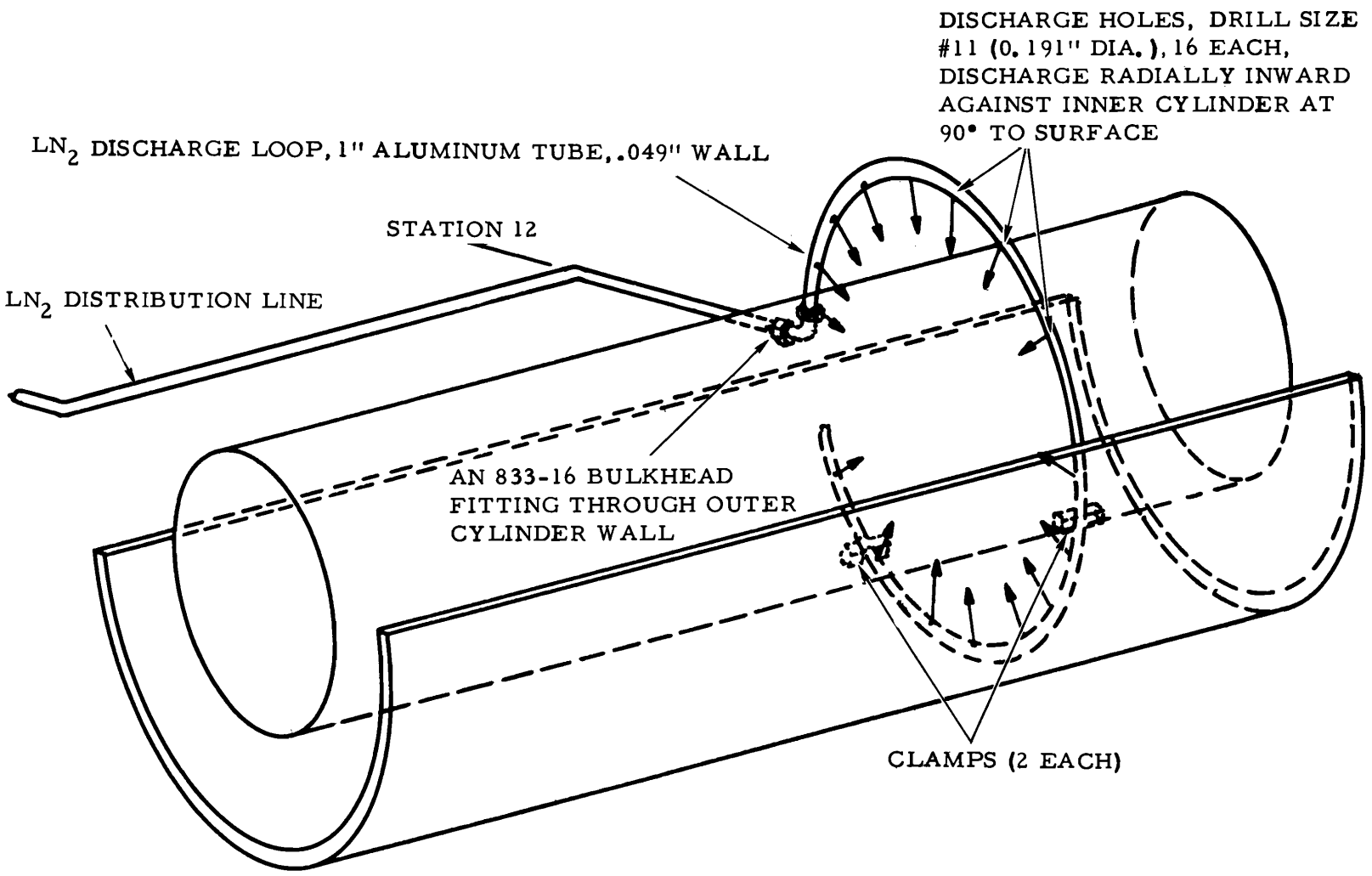

FIGURE 18 PERFORATED LOOP DISTRIBUTION SYSTEM

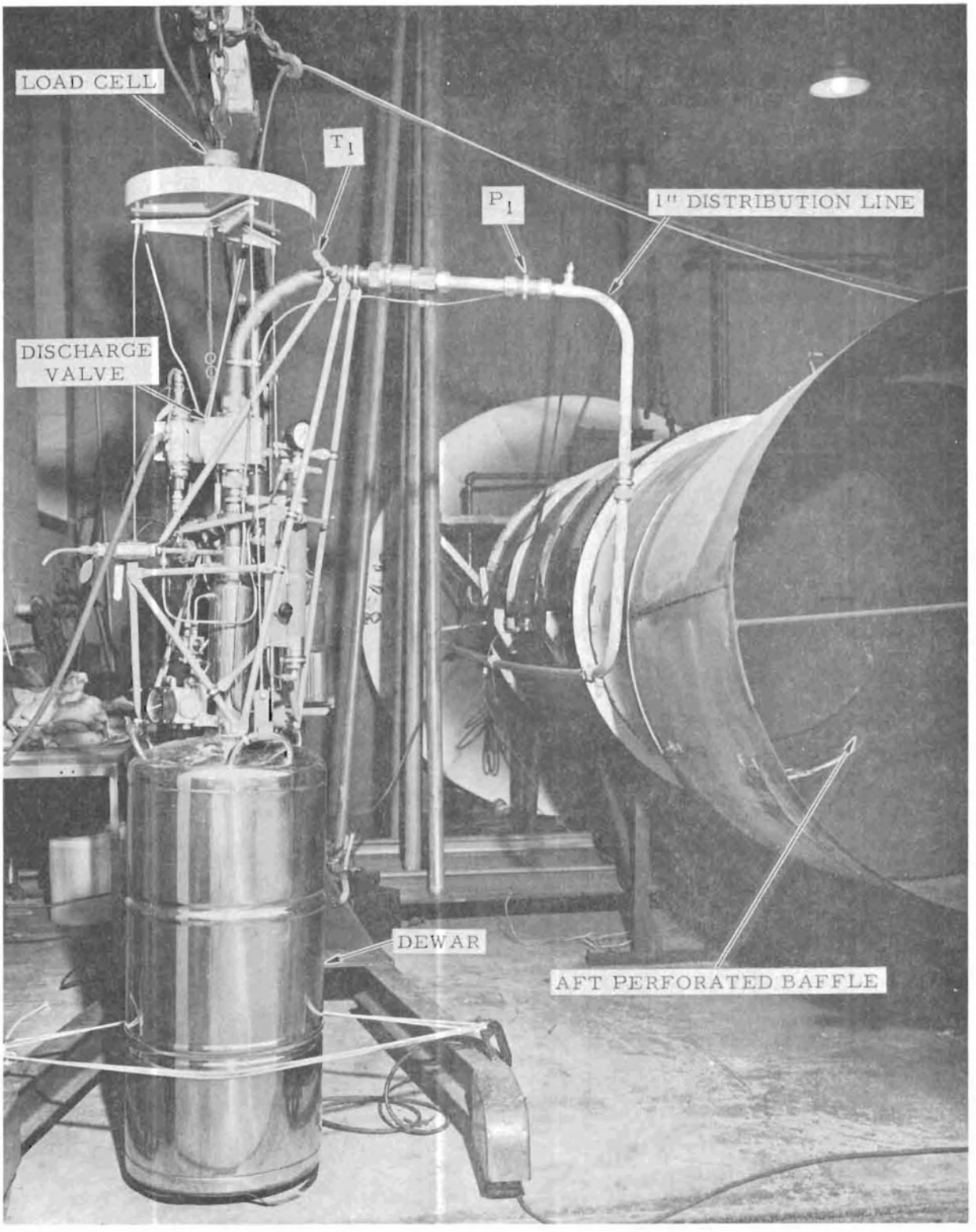

FIGURE 19 AFT VIEW OF TEST INSTALLATION IN MOCKUP ENGINE/NACELLE FACILITY

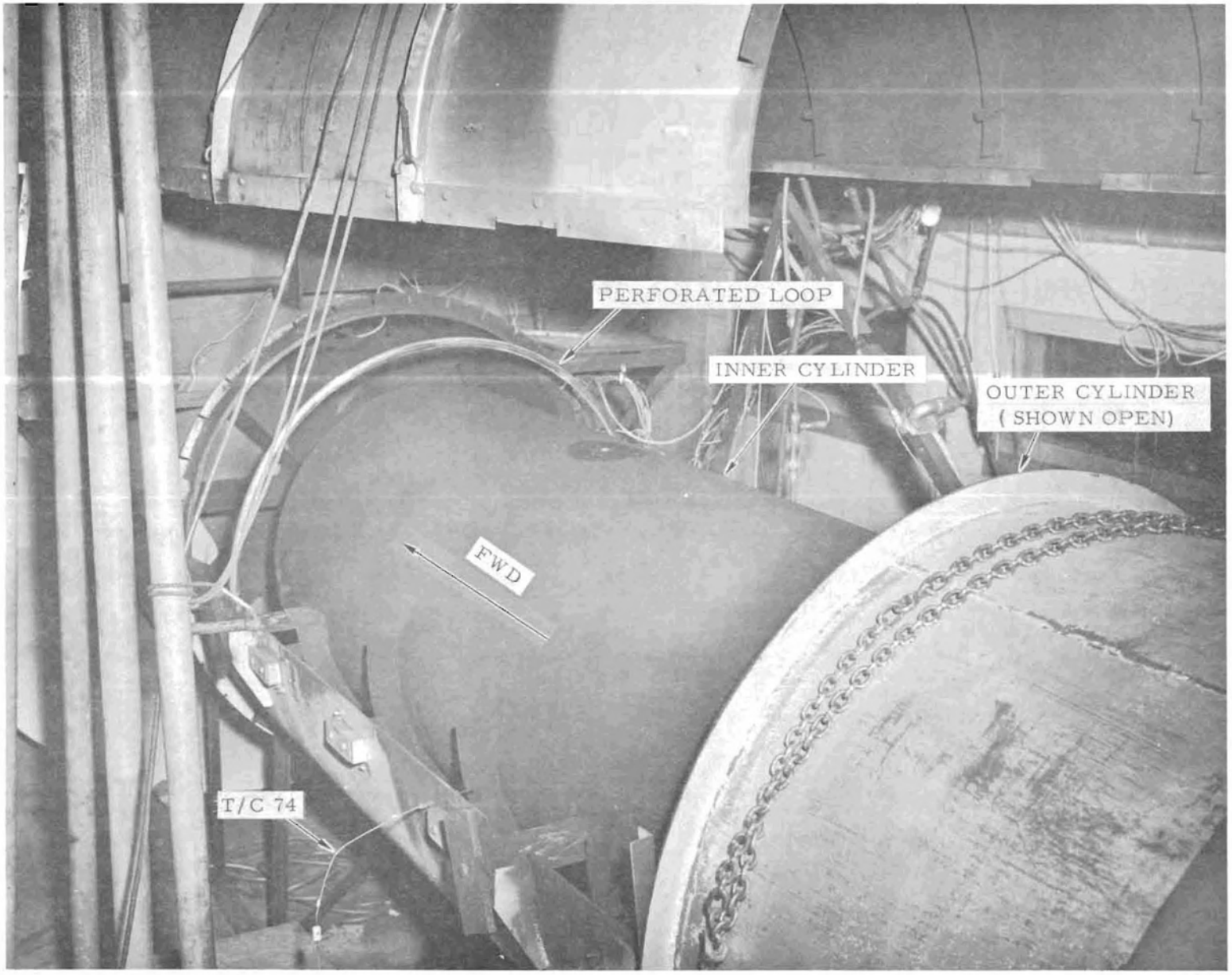

FIGURE 20 MOCKUP ENGINE/NACELLE FACILITY SHOWING TEST SECTION AND PERFORATED LOOP SYSTEM

through the test section was varied by symmetrically blocking various numbers and combinations of the 89 holes (each was 1 square inch in area) in the "Air Inlet Restrictor" shown in Figure 17. Airflow values tested ranged from 0.64 to 9.01 pounds per second. LN_2 discharge rates were varied from 0.9 to 3.61 pounds per second.

Tests Nos. 120 to 139 and 198 to 203, inclusive, were conducted using a perforated loop discharge system as shown in Figure 18. Compartment volume was 53 cubic feet. Fuel flows were varied from 0.421 gpm at 55 psig to 1.0 gpm at 55 psig. Airflows tested ranged from 3.69 to 9.12 pounds per second. LN_2 flows were tested from 0.70 to 3.22 pounds per second.

Following this series of tests, the aft baffle was moved forward approximately 24 inches, thus establishing a compartment with a void volume of 40 cubic feet. All tests in this series were conducted with LN_2 discharge occurring from AN-824 tee nozzles. Fuel flows were 0.1 gpm at 40 psig, 0.421 gpm at 55 psig, and 1.0 gpm at 55 psig. Test section airflows were varied from 0.68 to 7.62 pounds per second. LN_2 flows ranged from 0.21 to 2.66 pounds per second.

Results: Table 6 presents the test results applicable to the determination of the effect of compartment volume and type of discharge (tee nozzle or perforated tube) on the LN_2 discharge rate required for fire extinguishment. Figure 21 defines the effects of engine compartment air changes for a standard day on the LN_2 discharge rate requirements. This plot was derived from the conversion of curves of $\dot{W}_{LN_2}$ versus $\dot{W}_A$ as a function of the tested compartment volumes with data obtained from Table 6. Figure 21 shows that the mass flow rate of LN_2 required for extinguishment for each value of compartment airflow was influenced by the compartment volume. The required flow rate of LN_2 increased as the volume of the compartment increased for all values of compartment air changes. For compartment air change values below 60, the volume of the compartment had a linear effect on the LN_2 requirements. The slopes of all three compartment volume curves appear to be equal below approximately 60 air changes per minute. The LN_2 rate requirements do not appear to increase in proportion to the ratio of compartment volume at rates below 60 air changes per minute. When the number of compartment air changes was increased beyond 60 per minute, the effect of compartment volume became increasingly significant.

TABLE 6. - SUMMARY OF NITROGEN FLOW REQUIREMENTS AS A FUNCTION OF AIRFLOW, FUEL FLOW, COMPARTMENT VOLUME, AND DISCHARGE NOZZLE

Test No	Fuel Flow (gpm)	Air Flow (lb/sec)	$\dot{W}_{LN_2}$ (lb/sec)	Time Fire Exting. (sec)	Type Discharge Nozzle	Compartment Volume (ft^3)
45	0.30	2.55	1.33	Non-Ext.	Open-end tee	12.6
46	0.30	2.53	1.38	3.6		
49	0.30	1.87	1.41	4.0		
50	0.30	1.94	1.08	Non-Ext.		
51	0.30	1.45	0.98	4.1		
52	0.10	1.51	0.66	Non-Ext.		
54	0.10	1.04	0.73	Non-Ext.		
55	0.10	0.83	0.71	4.0		
57	0.10	0.58	0.60	3.8	Open-end tee	
59	0.10	0.52	0.44	Non-Ext.		12.6
85	0.421	3.93	0.92	Non-Ext.	Open-End tee	53
86	0.421	3.93	0.96	5.2		
89	1.0	3.87	0.91	Non-Ext.		
91	1.0	3.81	1.00	3.7		
94	1.0	5.73	1.01	Non-Ext.		
95	1.0	5.71	1.18	3.3		
101	0.421	5.89	1.01	Non-Ext.		
102	0.421	5.82	1.10	2.9		
117	1.0	6.74	2.41	2.4		
119	1.0	6.74	2.22	Non-Ext.		
186	0.10	0.64	0.09	1.6		
187	0.10	0.67	0.16	Non-Ext.		
189	0.10	0.95	0.58	6.7		
190	0.10	0.95	0.52	Non-Ext.		
192	1.0	8.99	2.81	1.2		
194	1.0	9.00	2.70	Non-Ext.		
196	0.421	9.00	2.80	1.0	Open-end tee	
197	0.421	8.99	2.25	Non-Ext.		53

TABLE 6. (continued)

Test No	Fuel Flow (gpm)	Air Flow (lb/sec)	$\dot{W}_{LN_2}$ (lb/sec)	Time Fire Exting. (sec)	Type Discharge Nozzle	Compart-ment Volume (ft3)
127	1.0	6.85	1.80	1.6	Perforated Tube	53
128	1.0	6.85	1.52	Non-Ext.		
137	1.0	3.79	0.89	2.7		
138	1.0	3.79	0.89	Non-Ext.		
198	0.421	5.77	1.27	1.9		
199	0.421	5.77	1.16	Non-Ext.		
202	0.421	9.08	3.22	0.8	Perforated Tube	53
203	0.421	9.08	2.81	Non-Ext.		
140	0.421	3.14	0.86	3.6	Open-End Tee	40
141	0.421	3.14	0.51	Non-Ext.		
143	0.421	4.68	0.68	Non-Ext.		
144	0.421	4.64	1.04	3.2		
148	0.421	5.41	0.76	3.7		
149	0.421	5.41	0.83	Non-Ext.		
152	0.421	6.24	0.91	Non-Ext.		
153	0.421	6.24	1.10	2.1		
155	0.421	5.77	0.94	Non-Ext.		
156	0.421	5.77	1.47	2.0		
163	0.421	7.48	2.40	1.6		
164	0.421	7.46	2.37	Non-Ext.		
168	1.0	7.46	2.37	Non-Ext.		
169	1.0	7.62	2.66	1.6		
174	0.1	0.68	0.21	2.0		
175	0.1	0.68	0.25	Non-Ext.		
179	0.1	0.99	0.35	Non-Ext.	Open-End Tee	40
180	0.1	0.98	0.71	4.0		

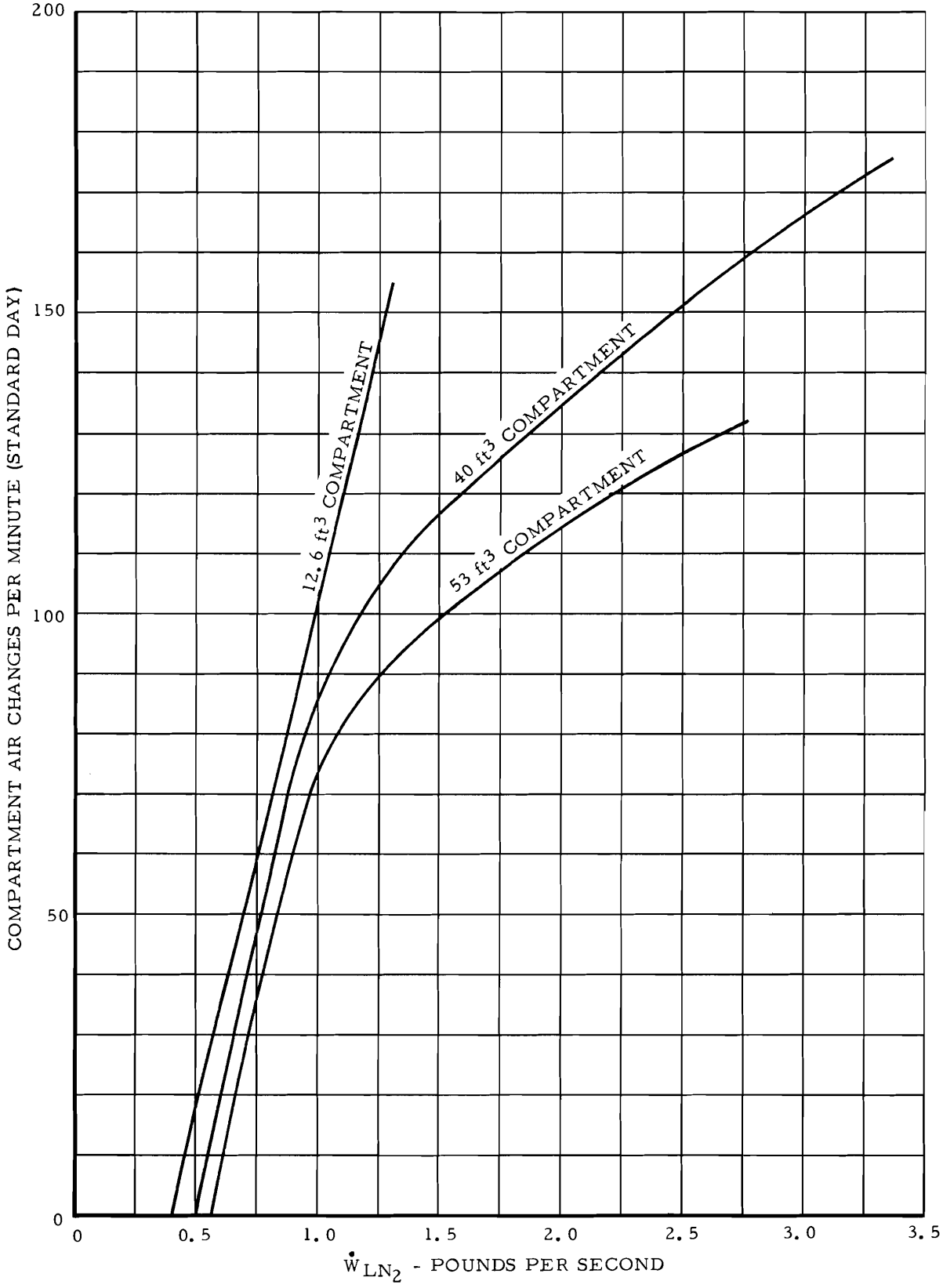

FIGURE 21 - INFLUENCE OF COMPARTMENT VOID VOLUME ON NITROGEN FLOW REQUIRED FOR FIRE EXTINGUISHMENT

The effects of the type of discharge nozzle, or system, are presented in Table 7. In the JT-12 installation, the fog nozzles and the open-end tee nozzles provided basically equal extinguishing capabilities in the low-airflow ranges in which they were tested. When tested in the simulated engine facility with a volume of 53 cubic feet, the open-end tee and the perforated tube systems provided essentially comparable capabilities at test section airflows of 4, 6, and 9 pounds per second. The slightly better performance of the open-end tee nozzle at the high airflow values might be due in part to a greater degree of airflow interruption and disruption caused by discharge from two points rather than the 16 points in the perforated tube. No attempt was made to optimize either system.

Nitrogen Flow Characteristics for the Tested Systems

Objective: The objective of this phase of the project was to determine the effects of dewar pressure, dewar fill ratio, line size, line length, nitrogen flashing, type discharge, and fittings on the flow rate of LN_2 through a distribution system.

Method: The tests were conducted in the laboratory area of the Fire Test Facility Building. A description of the systems tested is presented in Figure 22. Discharge from the dewar was initiated from the facility control room by means of an electrically operated cryogenic ball valve located between the dewar and the P_1/T_1 probe positions. Two test distribution systems were utilized; one system was fabricated from 1-inch-diameter tubing, and the other system was fabricated from 1/2-inch-diameter tubing. Each system was composed of two 12-foot and one 4-foot straight sections, one 90° bend section with a 2-foot radius, and one 90° bend section with 1-foot radius. The individual sections of the systems were connected with standard AN fittings. The tubing was uninsulated for all tests. The 1-inch-diameter tubing system was tested with open-end, spray, and perforated tube outlets. The 1/2-inch-diameter tubing system was tested with an open-end outlet. Static wall pressures were recorded by pressure transducers located at each of the AN fittings as shown in Figure 22. Stagnation temperatures were recorded by thermocouples located at the first and last AN fittings as shown in Figure 22.

For the tests, the nominal LN_2 fill weights in the dewar were 33, 67, and 86 pounds, and the nominal dewar saturation pressures were 40, 70, and 100 psig. Nominal discharge duration was 16 seconds to allow stabilization of the LN_2 flow.

TABLE 7. - EFFECT OF TYPE OF DISCHARGE ON NITROGEN FLOW RATE REQUIREMENTS FOR FIRE EXTINGUISHMENT

Engine Installation	LN_2 System	LN_2 DISCHARGE RATE FOR: $\dot{W}_A \cong 1$ lb/sec	4 lb/sec	6 lb/sec	9 lb/sec
JT-12 (12.6 cu ft vol)	Fog Nozzle	0.8 lb/sec	-----	-----	-----
	Open-end Tee	0.8 lb/sec	-----	-----	-----
Simulated Engine (53 cu ft vol)	Open-end Tee	0.6 lb/sec	1.0 lb/sec	1.2 lb/sec	2.8 lb/sec
	Perforated Tube	---------	0.9 lb/sec	1.3 lb/sec	3.0 lb/sec

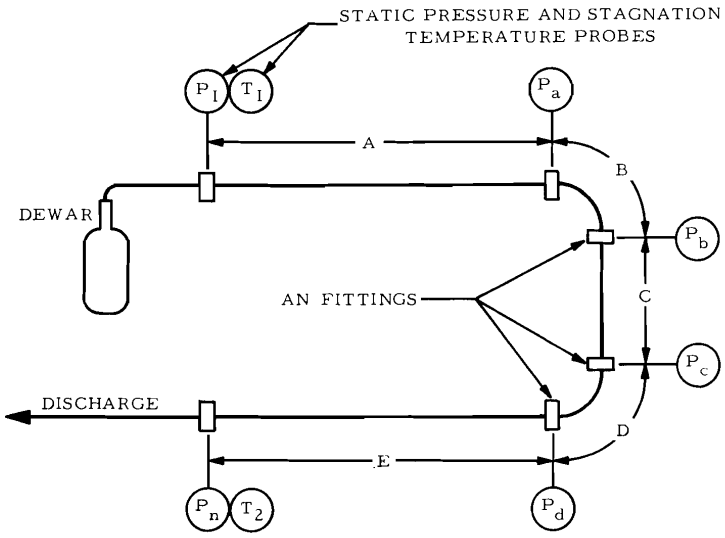

SYSTEM	TUBE O. D. (INCHES)	TUBE WALL THICKNESS (INCHES)	DIMENSIONS A & E (INCHES)	CENTERLINE DIMENSION B (INCHES)	DIMENSION C (INCHES)	CENTERLINE DIMENSION D (INCHES)	TUBE FITTINGS
1, 2, 3	1.00	0.065	142.5	37.7	48	18.8	AN 815-16 AN 818-16 AN 819-16
4	0.50	0.035	142.5	37.7	48	18.8	AN 815-8 AN 818-8 AN 819-8

SYSTEM 1 DISCHARGE

1" OUTSIDE DIAMETER WITH 0.065" WALL OPEN-END TUBE. NOZZLE AREA = 0.595 in^2

SYSTEM 3 DISCHARGE

FOUR #1-1/4 H 12 "FULLJET" SPRAY NOZZLES (SPRAYING SYSTEMS COMPANY)

TOTAL NOZZLE AREA = 0.645in^2

SYSTEM 2 DISCHARGE

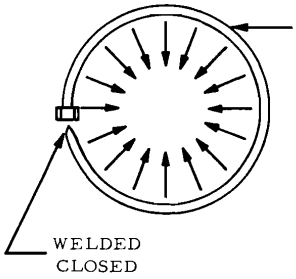

SYSTEM 4 DISCHARGE

1/2" OUTSIDE DIAMETER WITH 0.035" WALL OPEN-END TUBE. NOZZLE AREA = 0.145in^2

FIGURE 22 - SYSTEM CONFIGURATIONS AND INSTRUMENTATION USED FOR NITROGEN FLOW CHARACTERISTIC STUDY

In addition to the tests conducted specifically for this portion of the program, data from Tests Nos. 1 through 203, inclusive, were used to determine the relation between nitrogen flow and nitrogen quality.

Results: An overall summary of the system and component pressures and temperatures resulting from this series of tests is presented in Appendix G. Flow rates for the various systems tested are presented in Table 8. Figure 23 illustrates that a relationship exists between nitrogen flow rate, dewar saturation pressure, and dewar fill ratio. The data are shown for a 1-inch outside-diameter tube system with a 0.065-inch wall thickness. The nitrogen was discharged through the open-end of the last tube in the system. The tubing system component connector fittings were of the same inside diameter as the tubing components, thus essentially creating a straight-through system with no nozzle restriction.

A similar relationship between flow rate, saturation pressure, and fill ratio is presented in Figure 24. The 1-inch system was the same as described for Figure 23, with the exception that the nitrogen was discharged through the perforated loop. A comparative relationship is also shown in Figure 23 for a 1/2-inch-diameter open-end nozzle system. These figures illustrate that for any initial dewar saturation pressure, the nitrogen flow rate is influenced by the quantity of nitrogen in the dewar. Thus, on aircraft where quantities of LN_2 are normally expended during flight for inerting fuel tanks or for other purposes, the available LN_2 flow rate would decrease as the LN_2 is withdrawn from the dewar. Extrapolation of the curves to zero flow at a zero fill ratio indicate increasingly greater drops in flow rates as the dewar is emptied. The LN_2 flow rate would also be lowered by inadvertently saturating the dewar below the design saturation pressure during the filling operation.

As previously discussed, the amount of flashing in the nitrogen distribution system was controlled by inserting various sizes of orifices in the line at the dewar outlet. The pressure drops through the 21 feet of tubing between the orifice, and the discharge nozzles were recorded throughout the test program. The pressure loss for each size of tubing tested was determined to be primarily a function of the quality of the nitrogen downstream of the orifice and the weight flow rate of nitrogen. This is shown in Figure 25 for a 1-inch tube system with pressures measured 3 seconds after initiating the nitrogen discharge. The quality of the nitrogen was determined from Figure 26 as a function of the dewar saturation pressure and the pressure drop between the dewar and downstream of the

TABLE 8. - NITROGEN FLOW RATE AS A FUNCTION OF SYSTEM CONFIGURATION, DEWAR SATURATION PRESSURE, AND DEWAR FILL RATIO

Test No	System Configuration	Average Static Pressure at Nozzle (P_n) (psig)	Dewar Saturation Pressure (psig)	Dewar Fill Ratio (%)	System LN_2 flow Rate (lb/sec)	Nozzle LN_2 Flow Rate ($\dot{W}_{LN_2}$/A nozzle) (lb/sec-in^2)
204	1	34.4	105	101	2.72	4.57
205		39.1	105	61	2.67	4.49
206		33.6	105	35	2.36	3.97
207		28.5	70	86	2.30	3.87
208		19.8	70	34	1.70	2.86
209		27.5	70	64	2.22	3.73
210		16.8	40	86	1.60/1.72	2.69
211		16.3	40	67	1.44/1.64 Range	2.42
212		12.3	40	34	1.28/1.20	2.15
213		38.3	100	85	2.72	4.57
214	2	53.7	100	86	2.52	5.50
215		51.7	105	66	2.38	5.20
216		49.1	100	34	2.20	4.80
216A		45.2	100	33	1.86	4.06
217		44.3	70	79	2.10	4.59
217A		39.2	70	88	1.86	4.06
218		39.5	70	33	1.66	3.62
219		30.9	40	85	1.32	2.88
220		28.4	40	68	1.22	2.66
221		24.9	40	33	0.88	1.92

TABLE 8 (continued)

Test No.	System Configuration	Average Static Pressure at Nozzle (P_n) (psig)	Dewar Saturation Pressure (psig)	Dewar Fill Ratio (%)	System LN_2 Flow Rate (lb/sec)	Nozzle LN_2 Flow Rate ($\dot{W}_{LN_2}$/A nozzle) (lb/sec-in^2)
222	3	58.3	100	85	2.50	---
223	↓	51.9	100	32	2.18	---
224	↓	46.6	70	85	2.01	---
225	↓	37.3	70	34	1.52	---
226	↓	23.7	40	85	1.08	---
227	↓	24.9	40	34	1.04	---
228	4	20.1	105	84	0.44	3.03
229	↓	19.3	105	65	0.40	2.76
230	↓	21.6	105	34	0.34	2.34
231	↓	4.9	45	84	0.14	0.97
232	↓	10.3	75	84	0.22	1.52
233	↓	10.3	75	63	0.28	1.93
234	↓	7.5	40	33	0.24	1.66

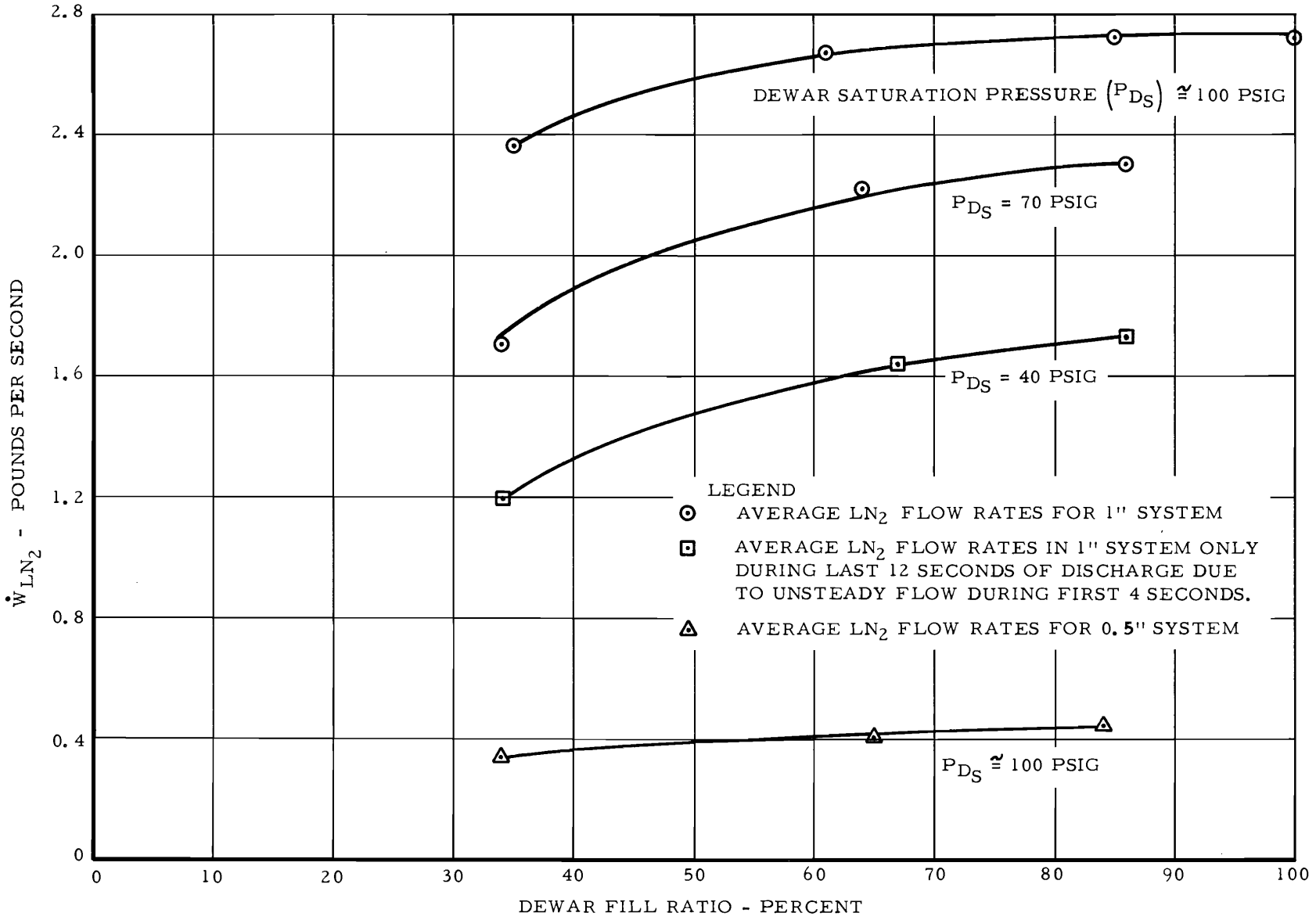

FIGURE 23 - NITROGEN FLOW RATES AS A FUNCTION OF DEWAR SATURATION PRESSURE AND DEWAR FILL RATIO FOR 1- AND 1/2-INCH-DIAMETER OPEN-END NOZZLE SYSTEMS

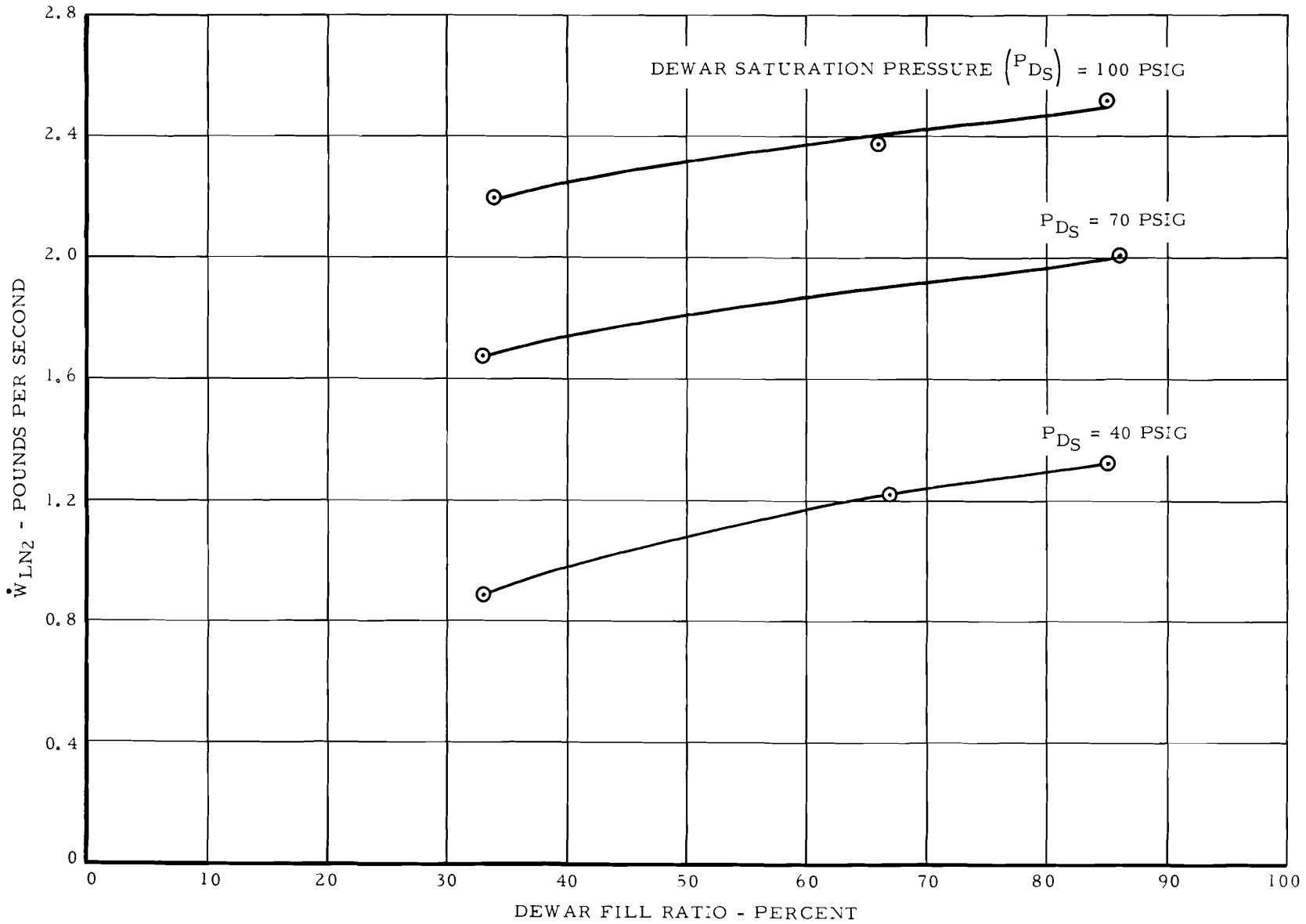

FIGURE 24 - NITROGEN FLOW RATES AS A FUNCTION OF DEWAR SATURATION PRESSURE AND DEWAR FILL RATIO FOR 1-INCH-DIAMETER PERFORATED TUBE DISCHARGE SYSTEM

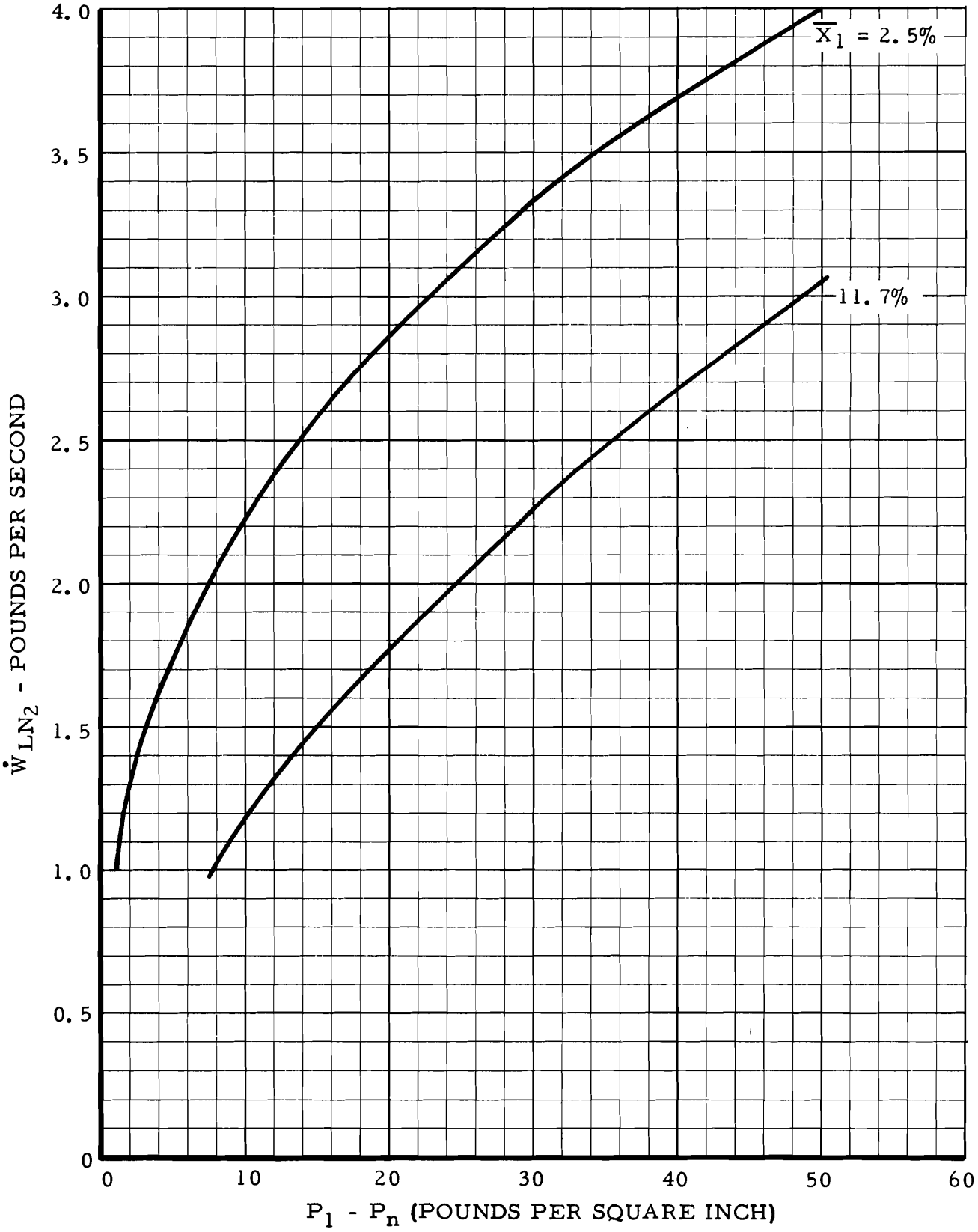

FIGURE 25 SYSTEM PRESSURE LOSS AS A FUNCTION OF NITROGEN FLOW RATE AND QUALITY

orifice. The relationship shown in Figure 26 was calculated from temperature-entropy data for nitrogen. As an approximation in the quality calculations, it was assumed that the thermodynamic process involved was an irreversible, steady-flow, adiabatic process, similar in anture to a throttling process. This figure was used to determine the nitrogen quality at locations in the distribution system where pressure measurements were taken. The quality curves shown in Figure 25 were developed by grouping all the data resulting from tests with nitrogen flows of 1 pound per second or greater, through the 21-foot 1-inch tube system into qualities less than 8 percent and 8 percent or greater. The qualities shown are average values for the tests in each grouping. The curves represent the least square fit in the form of a power curve function for the combined pressure loss and nitrogen flow rate data in each grouping. This figure indicates that from a design standpoint, it is important to minimize the pressure losses in the distribution system. When a pressure loss occurs in a flow system, quantities of liquid nitrogen, proportional to the losses, flashes to a gas and increases the quality of the nitrogen. Pressure losses downstream in the flow system, therefore, become substantially greater due to the higher quality (x) of the nitrogen. The fill ratio, saturation pressure and the nozzle size or discharge type did not substantially affect this relationship. The tests included fill ratios from 15 to 109 percent, dewar pressures from 65 to 115 psig, AN-834-4 to -16 nozzles, and perforated tube-type discharges.

Figure 27 shows the nitrogen weight-flow density through the nozzle as a function of the dewar fill ratio, the saturation pressure, and the quality of the nitrogen entering the nozzle. Again the quality is based on Figure 26 and measured pressure losses between the dewar and the nozzle. This relationship was established from tests (1 through 203) with 1/2-, 3/4-, and 1-inch type by 21-foot-long distribution systems; open-tube nozzles and the perforated tube-type discharge; and dewar pressures grouped from 80 to 90 psig and from 90 to 110 psig. The curves represent averaged quality values and the least square fit in the form of a power curve function, for the combined initial fill ratio and nitrogen flow density data (3 seconds into the nitrogen discharge), for each of the quality and dewar pressure groupings. The significant factors shown in this figure are the effects of fill ratio and dewar pressure on the nitrogen discharge rate. If the duration of the discharge was longer than the 10 seconds used in these tests, the nitrogen flow density would be

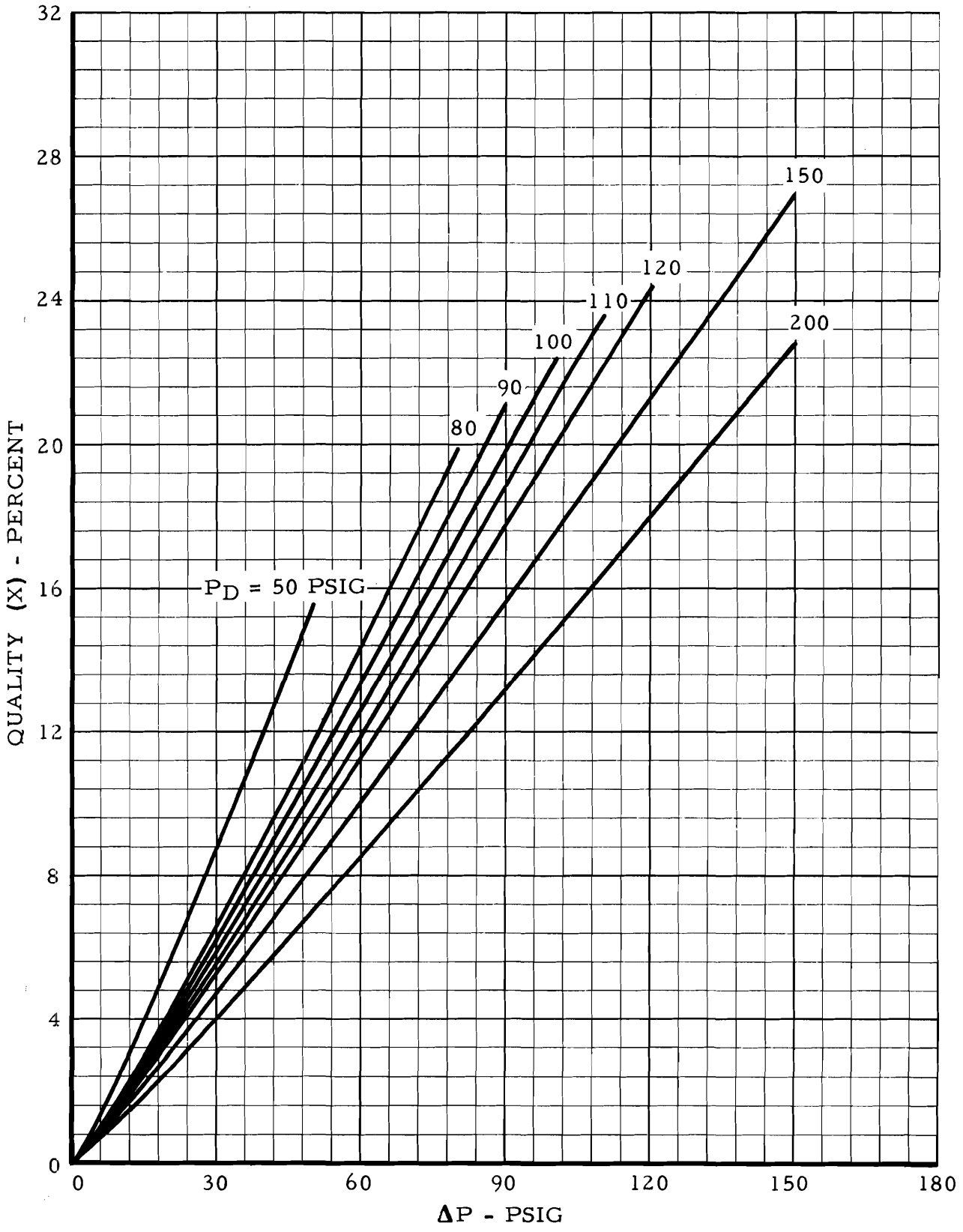

FIGURE 26 NITROGEN QUALITY AS A FUNCTION OF SYSTEM PRESSURES

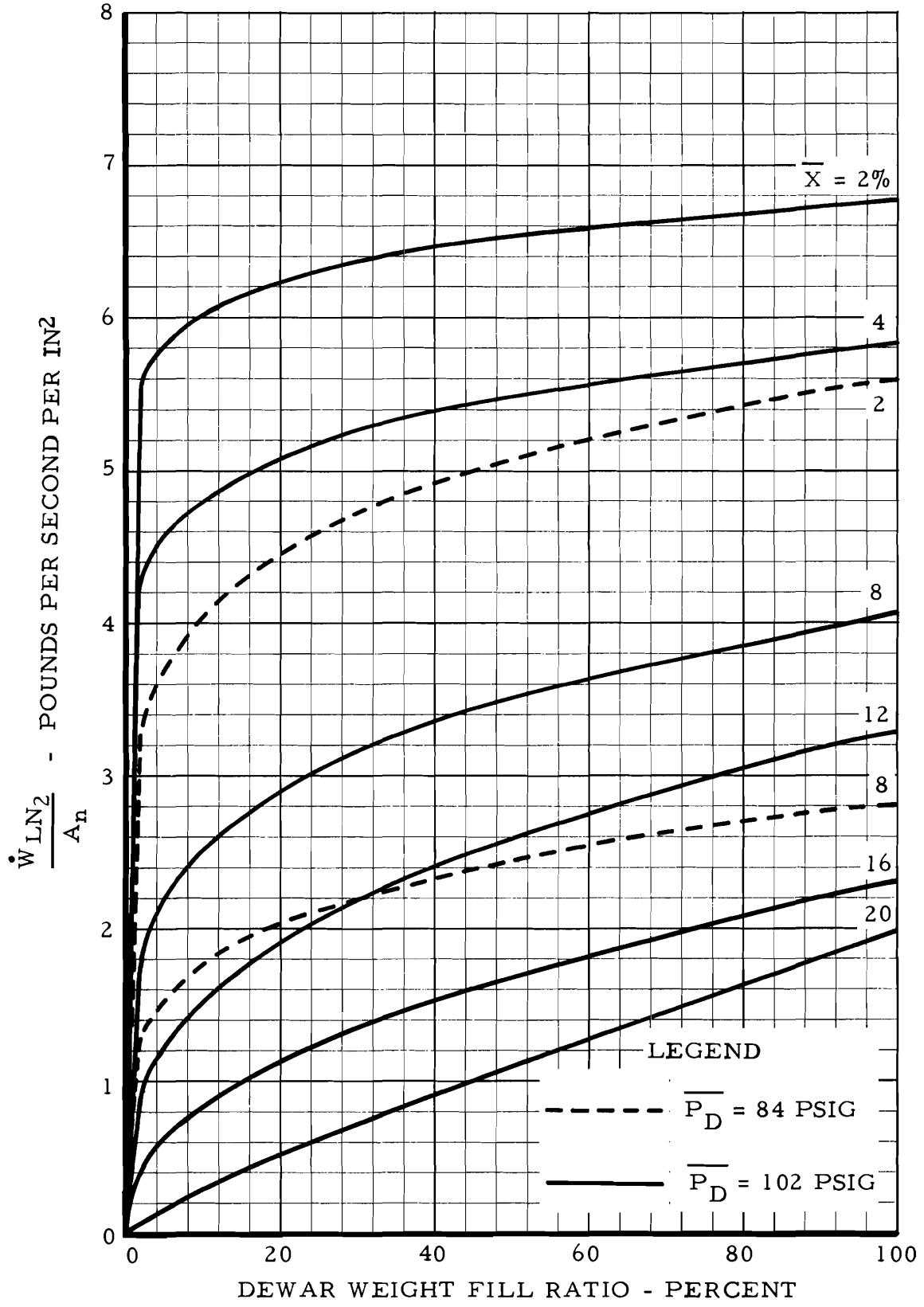

FIGURE 27 - NOZZLE DISCHARGE RATES FOR A 1-INCH-DIAMETE NITROGEN SYSTEM AS A FUNCTION OF DEWAR FII RATIO, SATURATION PRESSURE, AND QUALITY

expected to be substantially less at higher discharge rates, due to the larger changes between the initial and final fill ratios. However, if the capacity of the dewar is increased, then the nitrogen flow density would be expected to increase, due to the smaller difference between initial and final fill ratios.

CONCLUSIONS

Based upon the results of the evaluation of cryogenic nitrogen as an aircraft powerplant fire-extinguishing agent, it is concluded that:

1. The use of cryogenic nitrogen as an effective aircraft powerplant fire-extingushing agent is feasible from a functional standpoint.

2. The flashing of saturated cryogenic nitrogen in a distribution system increases the pressure losses in the lines and decreases the transfer rate substantially.

3. For equal length and diameter distribution systems, the location of the discharge valve and distribution line pressurization has no appreciable effect on the LN_2 transfer and fire-extinguishment capabilities of the system.

4. The rate at which the nitrogen is discharged is critical with respect to the effectiveness of the extinguishing system.

5. A long-duration LN_2 system discharge can provide a greater safety advantage than a conventional short-duration halogenated agent system discharge with respect to cooling potential reignition sources and reducing the vaporization rate of any fuel remaining within the nacelle after extinguishment.

6. Although no operational problems were encountered with the engine or components during the discharge of the low-temperature nitrogen within the test installations, additional testing will be required to completely define the effects of an inadvertent system discharge on an aircraft engine installation.

7. Fire-extinguishing protection for a low-airflow nacelle which has received damage in the form of large air leakages or openings in the cowling is feasible with a nitrogen system without substantially increasing the quantity of nitrogen required. The increase in the quantity of agent required for this added protection will, however, be more pronounced for a system with long distribution lines than for one with short distribution lines.

8. The type of discharge from the nozzle, whether liquid or gaseous, is not critical from the standpoint of extinguishing effectiveness.

9. For a low-flow nacelle, the volume of the compartment has little effect on the nitrogen discharge requirements.

APPENDIX A

DESCRIPTION AND RESULTS OF PRELIMINARY FEASIBILITY STUDY

DEPARTMENT OF TRANSPORTATION
FEDERAL AVIATION ADMINISTRATION
NATIONAL AVIATION FACILITIES EXPERIMENTAL CENTER
ATLANTIC CITY, NEW JERSEY 08405
PROPULSION SECTION, NA-542

April 1969

NA-542

DATA REPORT NO. 54

EXTINGUISHING AIRCRAFT POWERPLANT FIRES WITH LIQUID NITROGEN

PROJECT NO. 520-001-15X

James E. Demaree

ABSTRACT

The effectiveness of liquid nitrogen (LN_2) as a fire-extinguishing agent for the protection of aircraft powerplant installations was investigated under full-scale simulated low altitude flight conditions at the Federal Aviation Administration's National Aviation Facilities Experimental Center (NAFEC), Atlantic City, New Jersey. An LN_2 discharge system was developed and used to extinguish fires in the compressor and accessory compartment of an aft pod, side-mounted powerplant nacelle. The minimum quantitites and discharge rates required to extinguish test fires were determined for LN_2 as a function of nacelle ventilation rates. Comparative tests were conducted to determine the relative effectiveness of LN_2 to the fire-extinguishing agent currently being used on the majority of commercial United States transport aircraft.

Preliminary test results indicated that (1) LN_2 is effective in extinguishing fires in aircraft powerplant compartments; (2) the quantity of LN_2 expected to be available from a LN_2 fuel tank inerting system would be sufficient to extinguish the fires; and (3) on aircraft where a large quantity of LN_2 is available, an LN_2 fire extinguisher system could provide greater in-flight powerplant fire protection than the limited quantity of agent available in a conventional high rate of discharge system.

INTRODUCTION

Purpose

Project No. 520-001-15X was undertaken to provide fundamental desgin criteria for aircraft powerplant fire-extinguishing systems which utilize a liquid nitrogen (LN_2) supply common to other aircraft systems and to determine the relative effectiveness of LN_2 with other fire-extinguishing agents.

Background

The high performance of present day aircraft encourages the use of systems that may provide more than a single service in aircraft operation. LN_2 is being considered as a multi-service system in providing (1) inerting capability to the ullage space in aircraft fuel tanks; (2) fuel "scrubbing" to remove foreign matter such as water and oxygen; (3) galley cooling; and (4) fire protection to all potential fire zones such as powerplant, auxiliary power units (APU), and cargo-baggage area.

One proposed LN_2 system for a four-engine, transport-type aircraft would incorporate a Dewar with a 300-pound LN_2 capacity. During a typical trans-continental flight, approximately 200 pounds of LN_2 would be used in support of associated systems on the aircraft. The remaining 100 pounds, at the terminal point, could be utilized for fire protection. The weight/cost of such an installation thus encourages the utilization of LN_2 for more than one function.

During the past 25 years, the problem of providing protection against in-flight aircraft powerplant fires has been a formidable one. To provide adequate protection, several factors are involved regarding an acceptable agent used in fire extinguishment. Primary objectives of suitable fire extinguishing agents are:

1. Equally suitable for hydrocarbon and electrical fires.

2. Toxicity level should be below a range considered injurious to human health.

3. Be effective when stored at temperatures which may range from -65°F to approximately 500°F.

4. Storage life, in both the aircraft and in ground climatic conditions, be for extended duration.

5. The final cost and production capability be within the economic range of the customers.

6. The corrosive characteristics of the agent should be as low as present technology will permit.

7. The pressure-temperature characteristics should be such to provide adequate storage and in-flight containment capabilities.

LN_2 appears to meet most of the above requirements. However, there is a lack of technical knowledge on the effectiveness of LN_2 in extinguishing fires.

DISCUSSION

Test Installation

Tests were conducted in a 5-foot Fire Test Facility, described in the SRDS Technical Facilities at NAFEC, Handbook RD P 6000.2, paragraph 7-1 to 7-9. This facility is powered by two J-57 turbojet engines which produces airflow through a 64-inch-diameter by 16-foot-long test section. The number 2 engine nacelle from a C-140 aircraft was mounted in this test section as shown in Figure 1. A JT-12 turbojet engine was housed in this two-zoned aircraft nacelle. This engine utilizes a compressor bleed arrangement which discharges all of the compressor bleed air through a series of holes around the circumference of the engine compressor case into the nacelle void space and not overboard as in most conventional turbojet and turbofan installations. Further information concerning this air flow and its importance during the tests will be discussed under test results in this report.

The facility with this engine installation was normally limited to simulated level flight conditions from sea level to 5,000 feet and velocities from 0 to 350 knots on a standard day.

Test Equipment

The primary objective of this project was to evaluate the effectiveness of LN_2 as a powerplant fire-extinguishing agent; therefore, the major modification to the test installation was to the fire-extinguishing agent distribution system. The conventional system was not utilized and a distribution system utilizing four fog nozzles which broke up the liquid particles of N_2 was installed. This system is shown in Figure 2.

The LN_2 used during this testing was stored in a portable storage unit adjacent to the building and was transferred to a 300-pound capacity Dewar, shown in Figure 3. Flow duration of LN_2 from the Dewar and the flow rate were controlled by hand-operated ball valves. Flow of LN_2 was routed from the Dewar through these valves and through a 1-inch outside-diameter line to the powerplant nacelle where the LN_2 was discharged through the four fog nozzles into the 13-cubic-foot forward accessory compartment.

The Dewar used during this program was designed to permit filling with subcooled LN_2 from the storage unit and saturation with gaseous nitrogen (GN_2). Storage pressure in the Dewar was maintained between 100 psig and 140 psig during the test program.

Test Instrumentation

Standard wind tunnel instrumentation, utilized with the facility, consisted of static pressure pickups at various stations along the test section and read-out on water and mercury manometers in the control room.

The operation of both drive engines and the test engine was monitored with standard aircraft powerplant instrumentation. The power setting for these engines was set up using rotor speed and turbine discharge pressure. Airflow velocity through the test section was indicated on a Mach meter.

Ambient air temperature within the powerplant nacelle of the test engine was measured using 28-gauge chromel-alumel thermocouples. The output signals of these thermocouples were recorded on potentiometer-type recorders. Engine case temperature, at selected locations, was measured by chromel-alumel thermocouples spot welded directly to the engine case and were recorded on recording potentiometers in the control room.

Three instrumentation stations were used on the LN_2 system. A load cell was utilized to record weight of the LN_2 and container on an oscillograph.

Line pressure/temperature signals at the Dewar and at a point where the LN_2 system entered the powerplant nacelle were recorded on an oscillograph. These combined signals enabled calculations to be made of LN_2 discharge rate, total flow and time/temperature and pressure values as the LN_2 flowed through the line and into the nacelle. The test fire sequence and duration were manually controlled in the control room.

Test Procedures

Tests simulated flight conditions under which a fire could occur and test conditions were primarily set to control the amount of bleed air flowing into the nacelle. Airflow into the nacelle was a function of engine compressor speed and test section Mach number. The calculated bleed air flow was based on information contained in the manufacturer's JT-12 engine handbook. The combined values of ram air velocity in the test section and compressor rotation speed provided bleed air flows from 0.4 pounds per second to 2.9 pounds per second. The airflow provided by the blast tubes ranges from 0.1 to 0.2 pounds per second dependent on test section velocity. These airflow values are presented in Table I for each test conducted.

Basically three test schedules were used throughout the test program as described in Table II. The fire duration prior to engine cutoff was decreased to minimize fire damage to the nacelle. Test section air velocity was adjusted during the test engine power reduction to control the amount of bleed air flowing into the nacelle.

All test fires within the powerplant nacelle resulted from spray releasing and spark igniting JP-4 jet fuel. Fuel flow to the fire was decreased from 0.4 gallon per minute to 0.1 gallon per minute (at 20 psig) during the first fire tests.

The fire tests were conducted under conditions as outlined in Table II. The test section Mach number was established by the operation of the drive engine after setting the test engine at the required power. The test sequence was initiated and the test fire allowed to burn for a predetermined duration; then the test engine was shut down as in an emergency procedure. The test section velocity was maintained at a desired value determined by pretest planning. The LN_2 flow was controlled by manual operation of both the throttling valve and the on-off valve.

Results

Thirty-four tests were conducted during this first phase of a program designed to investigate the various parameters involved with the proposed use of LN_2 as a fire-extinguishing agent. They were conducted during a period from September 3, 1968, through November 5, 1968.

The ability to utilize LN_2 as an effective fire-extinguishing agent appears to be predicated on the rate of flow rather than a duration of flow. Fires were successfully extinguished in 2 to 3 seconds when LN_2 flow rate was above approximately 1.4 pounds per second and the maximum airflow in the compartment was maintained. As the airflow value decreased, the LN_2 flow rate required for extinguishment decreased, as noted in Table I.

The fire detectors shown in Figure 4 were utilized as flame sensors only in determining positive ignition time of the fuel and evidence of extinguishment time either by the supply of LN_2 or the back-up CO_2 system. These times were recorded on an oscillograph, and were used in determining extinguishing time as indicated in Table I.

The LN_2 discharge rate necessary for extinguishment is shown in Figure 5, as a function of nacelle airflow. Assuming a complete mixing and disregarding oxygen consumption by the fire, 5-percent, 10-percent, and 15-percent oxygen concentrations in the air are also shown. With two exceptions, when the oxygen value dropped below 15 percent test fires were extinguished.

A cooling effect was apparent during the LN_2 discharge. This effect, although not fully investigated during this phase of the project, is considered to be beneficial in decreasing the probability of reignitions by cooling potential hot-surface ignition sources. This, together with a probable excess in the amount of LN_2 available, could provide a greater degree of protection than most conventional powerplant fire-extinguishing systems.

Only two comparative tests were conducted with Bromotrifluoromethane ($CBrF_3$). Although the minimum quantity of agent required for extinguishment was not determined, it is estimated that LN_2 requires approximately three to four times more agent for extinguishment as compared to $CBrF_3$.

The effectiveness of LN_2 as a fire-extinguishing agent is considered due to cooling and oxygen dilution and not to a chemical reaction as in the case of most agents being used on today's aircraft for powerplant fire protection. LN_2 boils at -320°F at one atmosphere, has a heat of vaporization of 85 British Thermal Units per pound and each pound expands to 13.8 cubic feet of gas at 70°F and one atmosphere. In comparison, $CBrF_3$ boils at -72°F at one atmosphere, has a heat of vaporization of 48 British Thermal Units per pound and each pound expands to 2.6 cubic feet of gas at 70°F and one atmosphere.

The data presented in this report represent the first phase of project to determine the effectiveness of LN_2 as an extinguishing agent. The effects of line lengths and size, nozzle configuration, cooling during fire extinguishment, LN_2 storage container pressure and rates of discharge are items under consideration for future investigation.

TABLE I

LN_2 FIRE EXTINGUISHING TEST DATA SUMMARY

Test No.	Test Sequence (1)	Nacelle Air Flow lbs/sec (2)	Fire Location (3)	Fuel Flow gal/min	Fuel Flow Press. psig	LN_2 Flow Rate lbs/sec	LN_2 Flow Duration sec	Fire Extinguished	Fire Extinct sec
1.	A	0.80	A	0.42	55	3.18	15.7	Yes	NA
2.	A	2.42	B	0.30	30	2.48	10.5	Yes	NA
3.	B	2.12	B	0.10	20	1.00	10.0	Yes	NA
4.	B	2.22	B	0.10	20	0.21	9.4	No	--
5.	B	2.30	B	0.10	20	0.35	10.0	No	--
6.	B	2.09	B	0.10	20	1.01	12.9	Yes	3.3
7.	B	2.68	B	0.10	20	1.06	9.9	Yes	3.9
8.	B	2.69	B	0.10	20	0.89	10.1	Yes	4.3
9.	B*	2.74	B	0.10	20	0.96	8.3	No	--
10.	B*	2.77	B	0.10	20	0.83	7.8	No	--
11.	B	2.81	B	0.10	20	0.86	9.85	No	--
12.	B*	2.81	B	0.10	20	0.97	9.3	No	--
13.	B	2.68	B	0.10	20	0.90	10.85	No	--
14.	B*	2.81	B	0.10	20	0.90	11.15	Yes	8.0
15.	B*	2.83	B	0.10	20	1.96	5.1	Yes	2.5
16.	B*	2.79	B	0.10	20	1.56	4.8	Yes	2.7

(Continued)

Test No.	Test Sequence (1)	Nacelle Air Flow lbs/sec (2)	Fire Location (3)	Fuel Flow gal/min	Fuel Flow Press. psig	LN_2 Flow Rate lbs/sec	LN_2 Flow Duration sec	Fire Extinguished	Fire Extinct sec
17.	B*	2.78	B	0.10	20	1.64	3.05	Yes	2.5
18.			T E S T		V O I D				
19.	B*	2.87	B	0.10	20	1.39	5.05	Yes	2.5
20.	B*	2.63	B	0.10	20	1.61	2.95	Yes	2.6
21.	B*	1.55	B	0.10	20	0.51	5.35	No	--
22.	B*	1.50	B	0.10	20	0.57	5.8	No	--
23.	B*	1.08	B	0.10	20	0.53	5.2	No	--
24.	B*	1.09	B	0.10	20	0.79	5.05	Yes	2.7
(4) 25.		2.56	B	0.10	20				
(5) 26.		2.50	B	0.10	20				
27.	B*	0.85	B	0.10	20	0.21	7.2	No	--
28.	B*	0.80	B	0.10	20	0.55	7.3	No	--
29.	C	0.60	B	0.10	20	0.55	7.3	No	--
30.	C	0.58	B	0.10	20	1.1	7.3	Yes	2.1
31.	C	0.57	B	0.10	20	0.94	7.45	Yes	2.15
32.	C	0.37	B	0.10	20	0.86	7.0	Yes	2.6

(Continued)

Test No.	Test Sequence (1)	Nacelle Air Flow lbs/sec (2)	Fire Location (3)	Fuel Flow gal/min	Fuel Flow Press. psig	LN_2 Flow Rate lbs/sec	LN_2 Flow Duration sec	Fire Extinguished	Fire Extinct sec
33.	C	0.37	B	0.10	20	0.62	7.3	Yes	2.55
34.	C	0.37	A	0.103	20	0.14	7.25	No	--

1. Test Sequence described in Table

2. Average Nacelle Bleed Airflow During LN_2 Discharge

3. Fire location "A" is located 4 inches forward of firewall at 4 o'clock. Nozzle directed to spray forward, 5° up and 5° to the right in a horizontal plane.

   Fire location "B" is located 7-3/4 inches forward for firewall at 4 o'clock. Nozzle directed to spray forward and 5° to the right in a horizontal plane.

4. Test conducted using 1 pound of CB_RF_3. Fire extinguished.

5. Test conducted using 1 pound of CB_RF_3. Fire extinguished.

B* LN_2 flow duration less than 10 seconds. Note actual time.

TABLE II

SCHEDULE OF EVENTS

Schedule "A"

0	Initiate Test Sequence
+5	Ignition On
+10	Fuel On
+20	Chop or Abort
+30	LN_2 On & Ignition Off
+45	LN_2 Off - CO_2 On (if required)

Schedule "B"

0	Initiate Test Sequence
+10	Ignitor On
+15	Fuel On
+20	Chop
+30	LN_2 On
+40	LN_2 Off - CO_2 On (if required)

Schedule "C"

0	Initiate Test Sequence
+10	Ignitor On
+15	Fuel On
+17	Chop
+30	LN_2 On & Ignition Off
+38	LN_2 Off & CO_2 On (if required)

TABLE III

DATA SUMMARY

Run No.	Time	T_1	P_1	T_2	P_2	Load Cell	T_3
	(1)	(°F)	(psig)	(°F)	(psig)	(lb)(2)	(3)
1.	0	+18	111	+74	-0.5	321.5	
	3.0	-304	82	-300	72.0	313.5	
	15.7	-299	82	-301	67.5	271.0	
	0	-3	109	+76	-1.0	226.0	
2.	3.0	-288	98	-292	86.5	218.0	
	10.5	-290	79	-300	62.5	200.0	
	0	-8	127	+73	-1.5	304.5	
3.	3.0	-285	108	-303	63.0	301.0	
	10.0	-292	89	-313	36.5	294.0	
	0	-63	118	+79	-1.0	291.0	
4.	3.0	-119	117	+47	3.5	290.5	
	9.35	-295	115	-59	1.5	289.0	
	0	-64	120	+79	-1.0	286.0	
5.	3.0	-190	117	-44	14.0	285.0	
	10.0	-305	109	-336	10.0	282.5	
	0	-77	109	+62	-0.5	277.5	
6.	3.0	-300	114	-312	43.5	271.5	
	12.9	-310	114	-321	35.0	264.5	
	0	-50	126	+9	-1.5	241.5	
7.	3.0	-273	117	+7	46.0	238.0	
	9.8	NA	108	+9	34.0	231.5	
	0	-32	118	+3	-2.0	227.5	
8.	3.0	-285	113	+3	36.5	224.5	
	10.1	-291	108	+3	27.0	218.0	
	0	-46	119	+3	2.0	218.5	
9.	3.0	-276	114	+3	38.0	215.5	
	8.3	-288	107	+3	80.5	210.5	
	0	-36	116	+3	2.0	210.5	
10.	3.0	-286	111	+3	36.0	207.5	
	7.7	-299	108	+3	28.0	203.0	

TABLE III

DATA SUMMARY (Continued)

Run No.	Time (1)	T_1 (°F)	P_1 (psig)	T_2 (°F)	P_2 (psig)	Load Cell (lb)(2)	T_3 (°F)(3)
11.	0	-45	117	+3	2.0	204.5	
	3.0	-272	113	+3	37.5	201.0	
	9.9	-286	106	+3	26.0	196.0	
12.	0	-59	126	+36	2.5	198.0	
	3.0	-283	122	-288	43.5	194.5	
	9.25	-297	115	-310	30.0	188.5	
	0	-11	143	+35	2.0	190.0	
13.	3.0	-287	115	-300	37.0	187.0	
	10.85	-297	108	-314	25.0	180.0	
	0	-45	117	+35	2.0	181.5	
14.	3.0	-288	113	-294	37.5	179.0	
	11.15	-299	106	-314	26.0	171.5	
	0	-20	142	+32	2.0	172.0	
15.	3.0	-298	131	-292	79.5	159.0	
	5.1	-299	126	-296	72.5	161.0	
	0	+57	126	+60	2.0	156.5	
16.	3.0	-285	116	-300	78.0	152.5	
	4.8	-286	109	-303	72.5	149.0	
	0	+34	124	+52	2.0	149.0	
17.	3.0	-299	115	-300	74.5	144.0	
	3.05	-298	115	-300	74.0	144.0	
	0	+54	124	+62	2.5	145.0	
18.	3.0	-296	118	-303	59.5	142.0	
	5.0	-298	126	-305	55.0	139.5	
	0	+37	123	+53	2.0	140.5	
19.	3.0	-297	117	-202	58.5	136.0	
	5.05	-301	115	-305	54.0	133.5	
	0	+25	123	+49	1.5	135.5	
20.	2.95	-330	116	-303	57.5	130.5	

TABLE III

DATA SUMMARY (Continued)

Run No.	Time	T_1	P_1	T_2	P_2	Load Cell	T_3
	(1)	(°F)	(psig)	(°F)	(psig)	(lb)(2)	(°F)(3)
	0	+57	129	+64	1.0	110.5	+166
21.	3.0	-254	127	-89	16.5	109.0	+137
	5.35	-293	126	-264	16.0	108.5	+110
	0	+27	128	+55	0.0	109.0	+164
22.	3.0	-285	125	-192	21.0	107.0	+125
	5.8	-293	124	-327	20.5	106.0	+95
	0	+40	126	+63	-0.5	107.0	NA(4)
23.	3.0	-279	123	-131	20.5	100.0	+212
	5.2	-289	122	-304	17.5	104.5	+160
24.	0	+21	125	+49	-0.5	104.0	--
	3.0	-287	121	-302	17.0	102.5	+149
	5.05	-291	120	-250	12.0	100.0	+101
	0	--	NA	NA	NA	NA	+166
25.	3.0	NA	NA	NA	NA	NA	+137
	0	NA	NA	NA	NA	NA	+137
26.	0.25	NA	NA	NA	NA	NA	--
	3.0	NA	NA	NA	NA	NA	+130
	0	+61	135	+67	0.0	242.5	--
27.	3.0	-132	136	+40	3.0	--	--
	7.2	-291	131	-26	3.0	241.0	--
	0	+36	136	+69	-0.5	237.5	+291
28.	3.0	-269	131	-122	21.0	--	+185
	7.3	-302	129	-335	17.0	233.5	+106
	0	-66	134	+53	-0.5	234.5	--
29.	3.0	-267	130	-132	18.5	--	--
	7.3	-302	129	-339	15.0	230.5	+266
	0	+36	135	+57	-0.5	230.5	--
30.	3.0	-294	127	-304	47.0	--	+305
	7.3	-302	121	-321	36.5	220.5	+130

TABLE III
DATA SUMMARY (Continued)

Run No.	Time	T_1	P_1	T_2	P_2	Load Cell	T_3
	(1)	(^oF)	(psig)	(^oF)	(psig)	(lb)(2)	(^oF) (3)
	0	+16	132	+34	-0.5	223.0	--
31.	3.0	-293	126	-303	36.5	--	+315
	7.45	-298	128	-321	30.0	216.0	+136
	0	+53	138	+34	-0.5	218.5	--
32.	3.0	-286	133	-303	34.5	--	--
	7.0	-295	128	-321	27.5	212.5	+230
	0	-40	132	+35	0.0	207.5	--
33.	3.0	-230	127	-127	16.0	--	--
	7.3	-295	126	-108	13.0	204.5	+334
	0	--	130	--	-0.5	204.5	--
34.	3.0	--	129	--	6.5	--	--
	7.25	--	128	--	6.5	203.5	--

NOTES:

(1) Time in seconds after LN_2 flow was initated.
(2) Quantity of LN_2 remaining in Dewar.
(3) Nacelle ambient temperature measured at Nacelle Station 104, at 3:30 o'clock position.
(4) NA = Not Applicable.

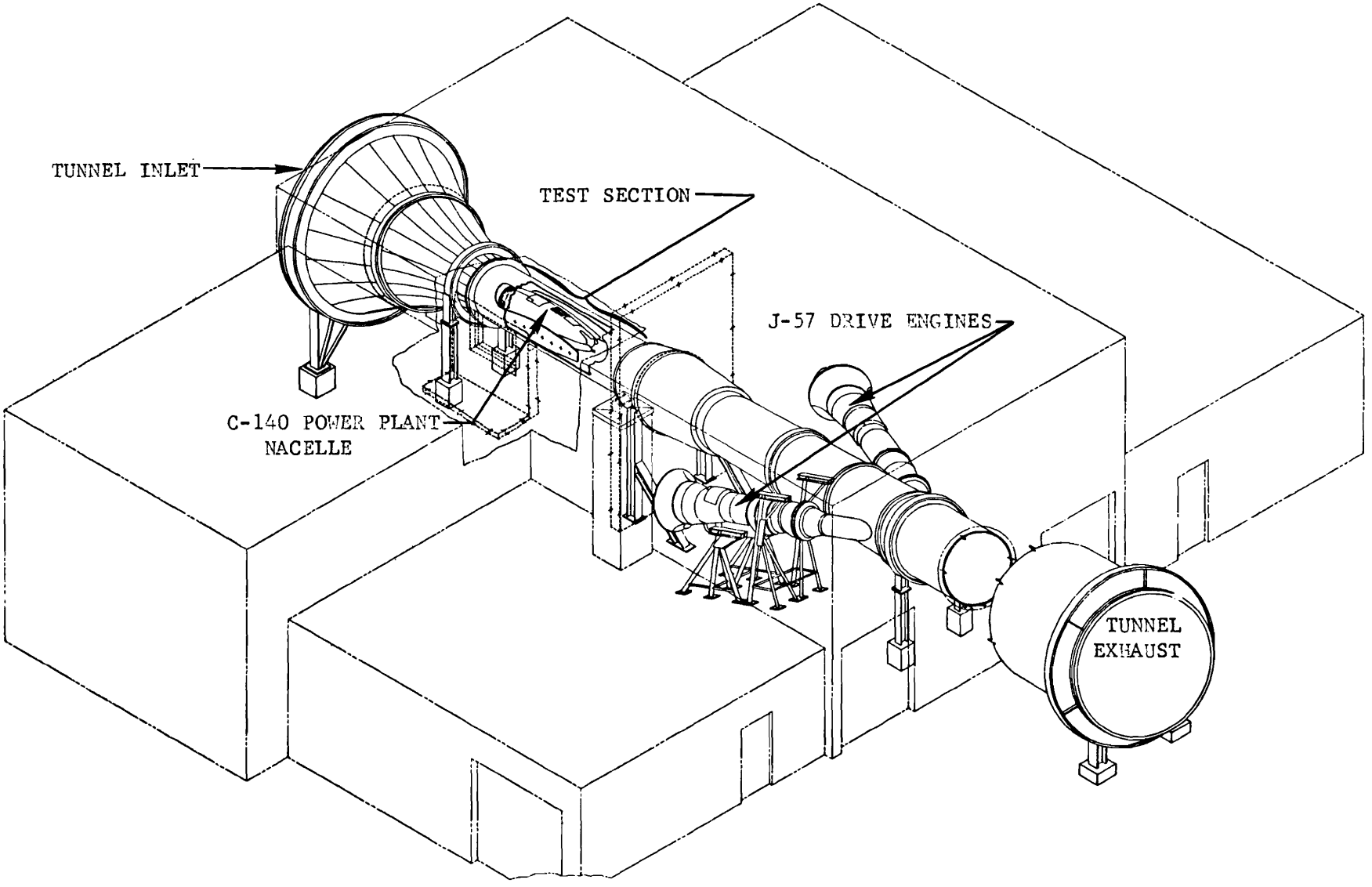

FIGURE 1 FIVE-FOOT FIRE TEST FACILITY

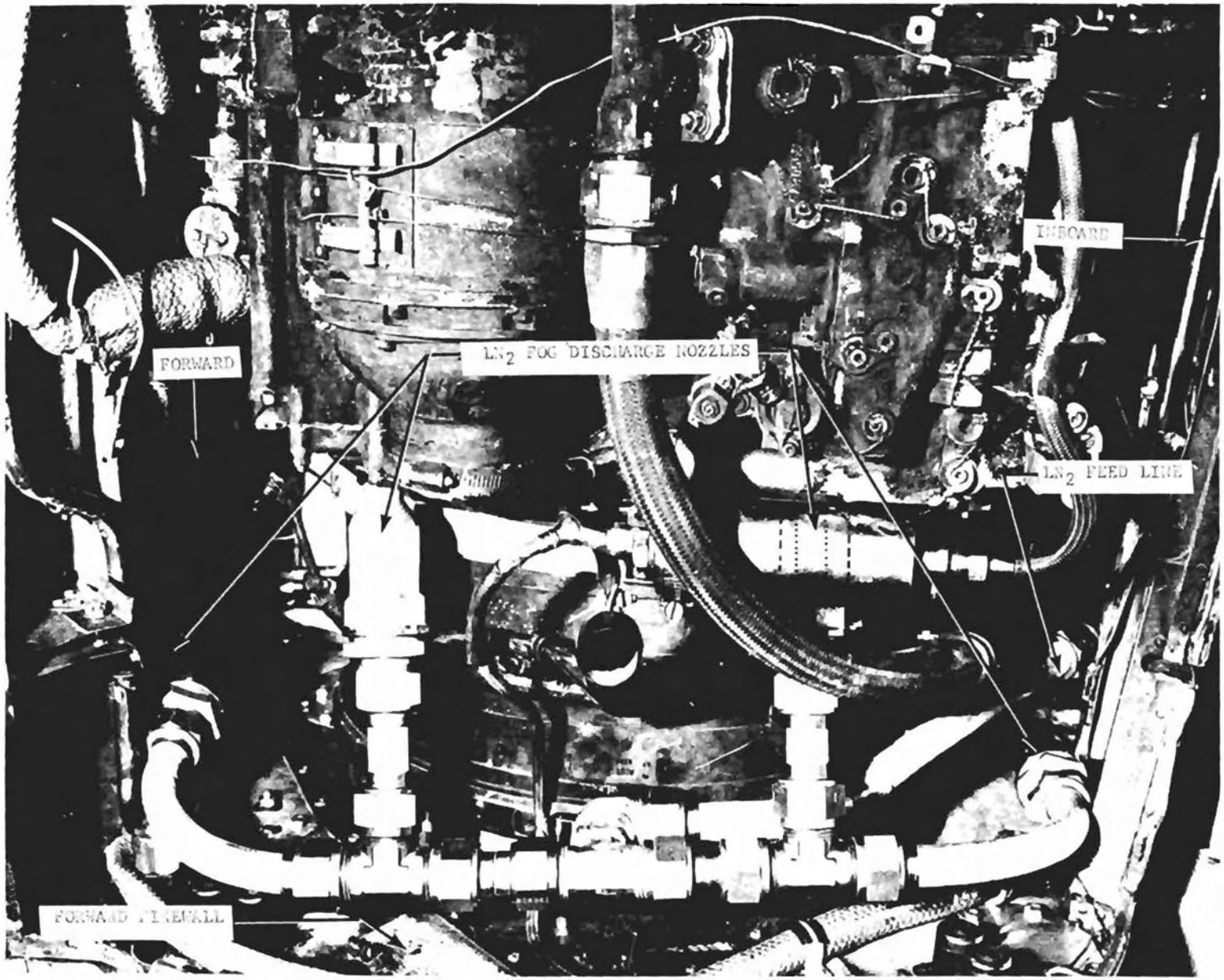

FIGURE 2 JT-12 POWERPLANT AND NACELLE SHOWING LN_2 DISCHARGE SYSTEM

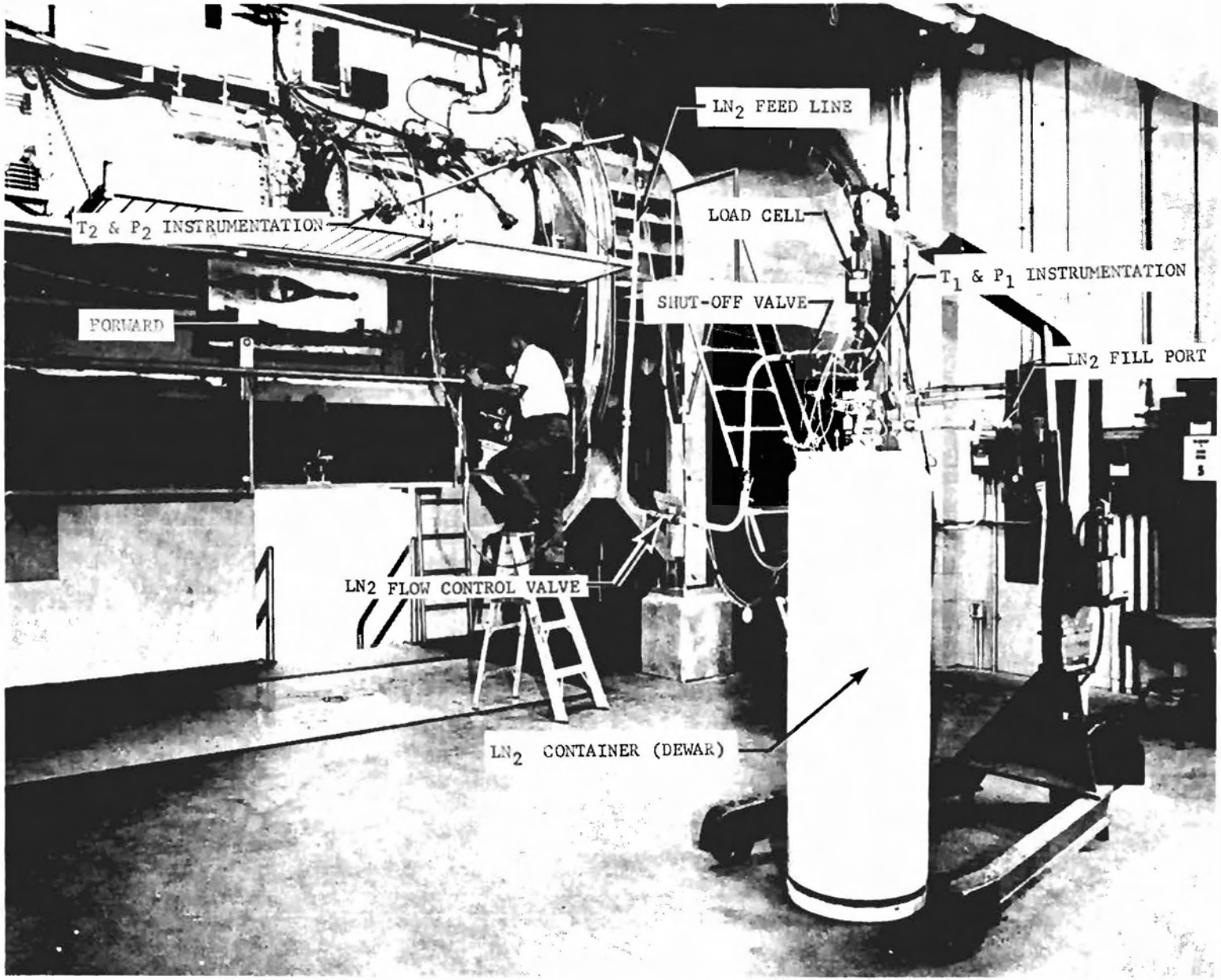

FIGURE 3 WORK AREA SHOWING LN_2 CONTAINER AND ASSOCIATED COMPONENTS

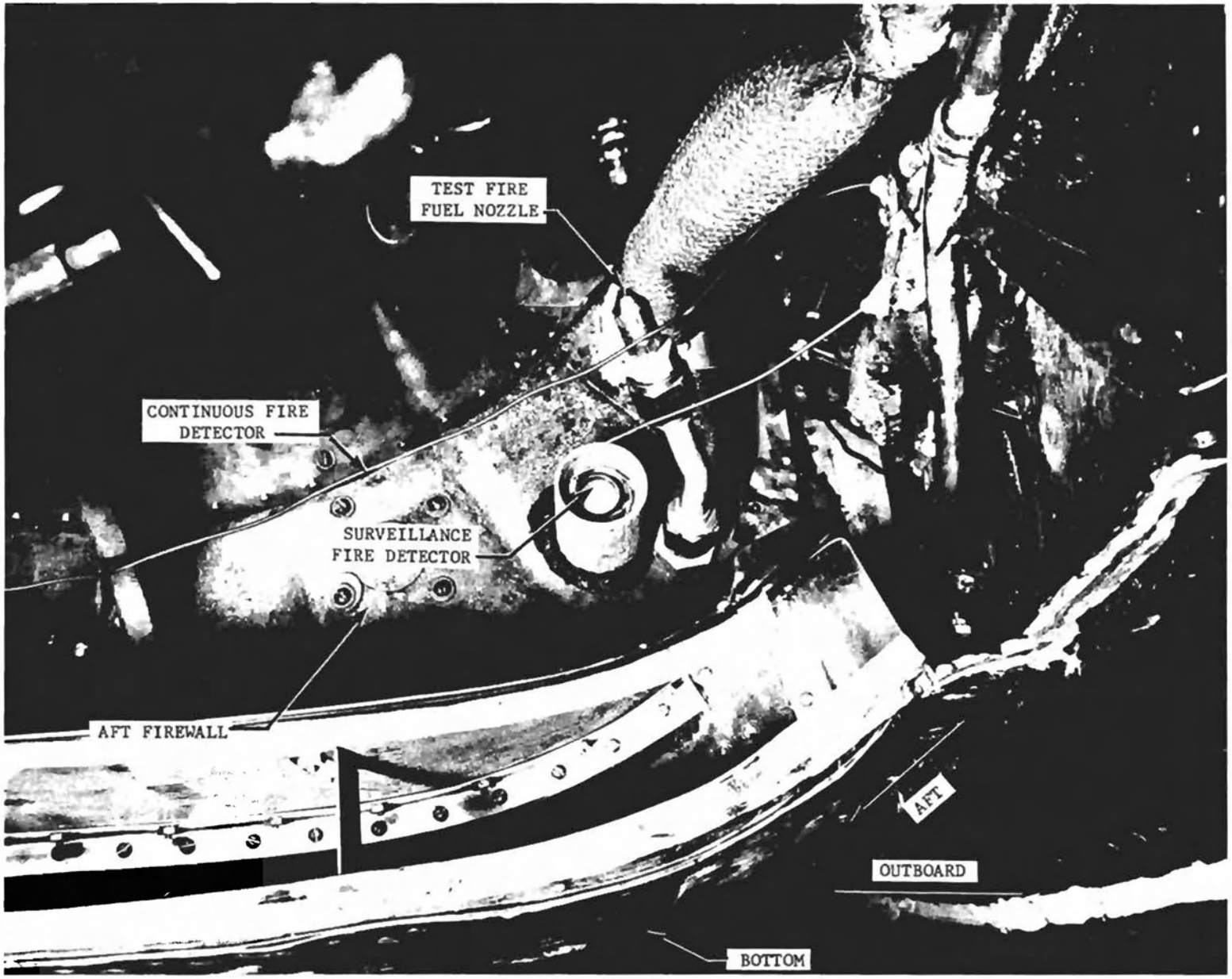

FIGURE 4 BOTTOM REAR VIEW OF JT-12 POWERPLANT NACELLE SHOWING FUEL NOZZLES AND FIRE SENSORS

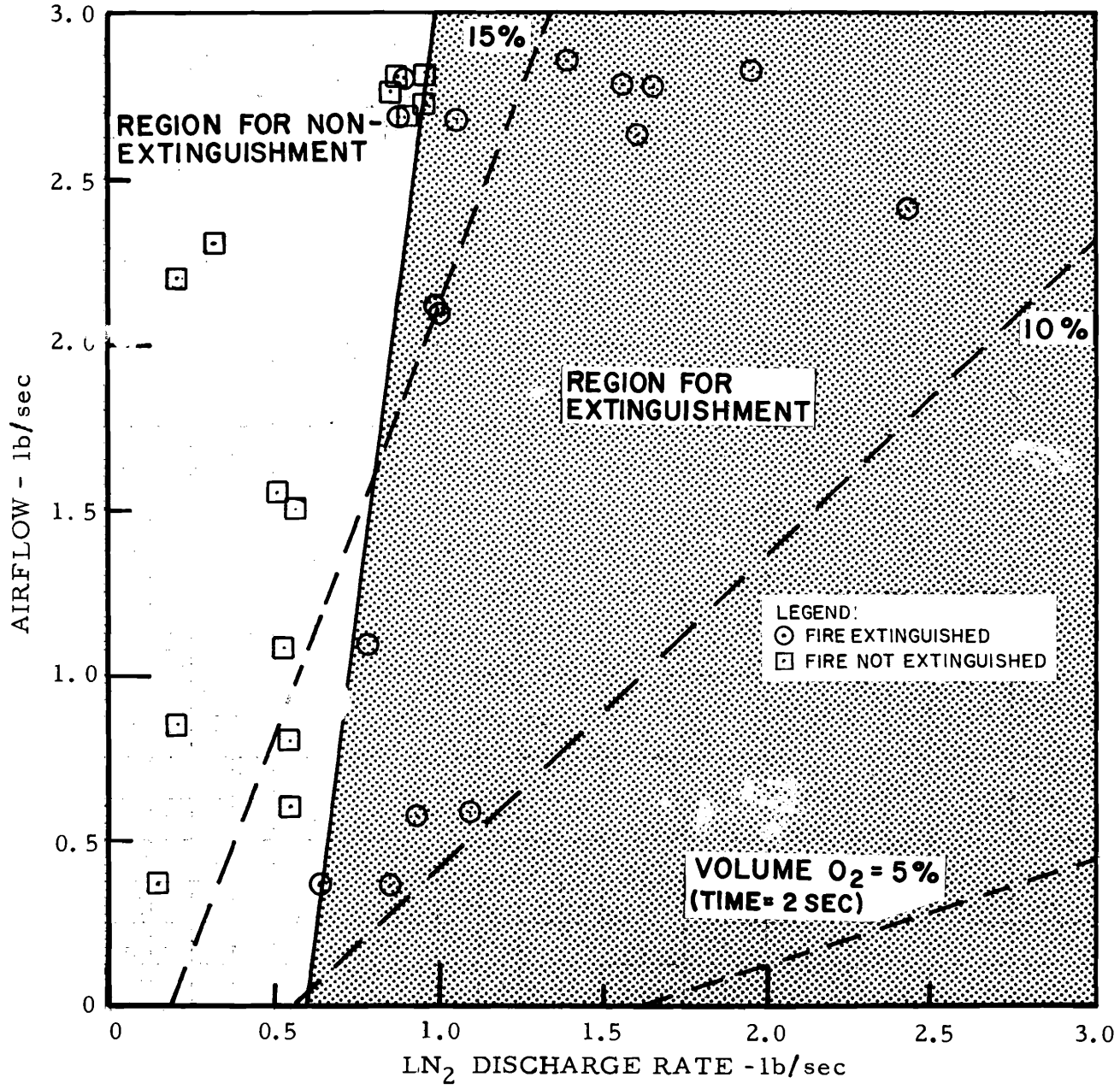

FIG. 5 LN_2 DISCHARGE REQUIREMENTS FOR FIRE EXTINGUISHMENT

APPENDIX B

SUMMARY OF TEST CONDITIONS AND TEST RESULTS

TABLE 2-1 -- SUMMARY OF TEST CONDITIONS AND TEST RESULTS

TEST NO.	TEST PLAN ITEM	TEST EVENT SEQUENCE	TEST FACILITY BLDG. NO.	TEST COMPARTMENT VOID VOLUME (CU. FT.)	INITIAL MACH NO. VS. MACH NO. AT LN_2 DISCHARGE	NACELLE SECONDARY AIRFLOW (LB/SEC)	FUEL FLOW TO FIRE: RATE & LOC. (GPM)	LINE LENGTH (FT)	NOMINAL LINE SIZE (IN. O D)	WALL THICKNESS (IN.)	TYPE DISCHARGE NOZZLE	NOMINAL SIZE OF OUTLETS (IN. X16)	LINE ORIFICE SIZE (IN. ID)	DEWAR FILL RATIO BY WEIGHT (PERCENT)	DEWAR SATURATION PRESSURE (PSIG)	DEWAR PRESSURE AT DISCHARGE (PSIG)	TOTAL WEIGHT OF LN_2 DISCHARGED (LB)	STABILIZED LN_2 FLOW RATE (LB/SEC)	LN_2 FLOW DURATION (SEC)	FIRE EXTINGUISHED	EXTINGUISHING TIME AFTER LN_2 ON (SEC)
1	1 a	NA	204	NA	NA	NA	NA	21	1	0.040	Tee	16	None	57	105	114	21.8	3.97	6.3	NA	NA
2												12		36		104	16.6	2.83	5.9		
3												10		109		108	13.4	2.56	5.4		
4												8		95		103	10.0	1.97	6.5		
5												6	None	86		100	6.4	0.99	7.3		
6												16	0.464	76		108	8.8	2.52	4.7		
7												10	0.464	68		108	8.2	1.66	5.3		
8												6	0.464	59		107	4.4	0.91	5.7		
9												16	0.251	55		106	3.5	0.63	6.1		
10												10	0.251	52		104	4.0	0.76	6.6		
11												6	0.251	49		101	4.5	0.70	7.5		
12												16	0.376	37		100	9.0	1.38	6.7		
13												10	0.376	30		99	9.0	1.32	6.5		
14									1	0.040		6	0.376	23	105	90	5.0	0.81	6.4		
15									3/4	0.049		12	0.652	102	103	105	13.0	1.84	7.1		
16												10	0.652	89		105	12.5	1.70	7.3		
17												6	0.652	75		107	6.6	1.15	6.4		
18												12	0.376	67		106	7.0	1.10	6.6		
19												10		56		103	7.0	1.01	7.0		
20												8		50		100	6.0	0.99	6.9		
20A												6	0.376	36		92	3.0	0.55	6.2		
21												12	0.251	43		97	3.5	0.45	7.1		
22												10	0.251	40		95	3.5	0.60	7.7		
23									3/4			6	0.251	37		94	2.5	0.48	6.3		
24									1/2			8	0.402	102		107	4.0	0.61	7.1		
25												6	0.402	98		106	3.8	0.59			
26												4	0.402	95	103	105	3.0	0.54			
27												8	0.376	87	104	101	3.0	0.51			
28												8	0.251	86		105	1.8	0.35			
29												6	0.251	84		104	2.0	0.37			
30	1 a	NA		NA	NA	NA	NA		1/2	0.049		4	0.251	82		103	1.4	0.31	7.1	NA	NA
31	1 b	A		12.6	0.50/0.23	1.71	0.10/B		1	0.040		6	None	44		109	8.0	1.02	10.2	No	--
32						1.32						8	None	35	104	107	17.4	1.76	9.9	Yes	4.32
33						1.81						0.345(a)	None	99	90	92	10.8	1.26	10.1	Yes	6.08
34						1.86						10	0.376	90		103	10.5	1.09	10.2	Yes	6.64
35						1.84						6	0.251	79		92	3.8	0.51	10.2	No	--
36						1.80						8	0.376	74		91	9.3	1.06	10.2	Yes	6.72
37						1.84						8	0.329	66		91	6.8	0.91	10.1	No	--
38						1.75						16	0.376	56		100	11.3	1.16	10.2	Yes	3.43
39						1.92						12	0.329	44		100	8.8	0.91		No	--
40	1 b				0.50/0.23	1.81						16	0.329	36	90	100	7.5	0.91		No	--
41	2				0.63/0.66	2.54						8	0.464	91	104	104	15.5	1.45		Yes	4.17
42						2.56						0.345(a)		76		103	11.5	1.22		Yes	6.00
43						2.53	0.10/B					6		65		100	8.0	0.91	10.2	No	--
44	2					2.54	0.30/B					0.345(a)		57		101	10.8	1.15	10.1	No	--
45	2&4					2.55						8		47	104	97	12.8	1.33	10.2	No	--
46						2.52								95	103	103	15.0	1.38	10.2	Yes	3.57
47						2.54	0.30/B							81		101	14.0	1.33	10.2		5.83
48	2&4				0.63/0.66	2.51	0.70/B					8	0.464	65		105	13.5	1.42	10.1		3.46
49	4				0.50/0.23	1.87	0.30/B					0.345(a)	None	51		103	15.0	1.41	10.1	Yes	3.99
50					0.50/0.23	1.94	0.30/B					6		39	103	100	8.5	1.08	10.1	No	--
51					0.50/0.30	1.45	0.30/B					6		99	100	101	9.0	0.94	10.2	Yes	4.12
52					0.50/0.30	1.51	0.10/B					0.234(a)		84		105	5.0	0.66	10.1	No	--
53					0.50/0.20	1.17						0.234(a)		79		105	5.5	0.71	10.1	No	--
54					0.50/0.20	1.04						0.267(a)		74		106	7.0	0.73	10.2	No	--
55					0.50/0.10	0.83						0.267(a)		68		105	7.0	0.71	10.2	Yes	4.04
56						0.60						0.267(a)		53		105	7.0	0.70	10.0	Yes	--
57						0.58						0.234(a)		51		105	5.0	0.60	10.1	Yes	3.81
58						0.58						4		46		104	2.0	0.22	10.0	No	--
59						0.52						0.234(a)		25	100	105	4.3	0.44	10.1	No	--
60	4	A				0.54		21	1	0.040	Tee	0.234(a)		92	102	101	5.5	0.62	10.1	Yes	6.70
61	5 a	B			0.50/0.10	1.30		--	--	--	--	--	--	--	--	--	--	--	--	--	--
62		C			0.50/0.20	0.85	0.10/B	--	--	--	--	--	--	--	--	--	--	--	--	--	--
63					0.50/0.10	0.53	0.07/B	--	--	--	--	--	--	--	--	--	--	--	--	--	--
64	5 a				0.50/0.20	1.06	0.03/B	--	--	--	--	--	---	--	--	--	--	--	--	--	--
65	5 b				0.50/0.20	0.83	0.03/B	21	1	0.040	Tee	12	None	71	102	105	12.5	0.91	13.4	Yes	2.84
66	5 b				0.50/0.20	0.95	0.03/B	21	1	0.040	Tee	12	None	12	102	101	25.0	2.81	9.0	Yes	2.51
67	5 a				0.50/0.10	0.36	0.08/B*	--	--	--	--	--	--	--	--	--	--	--	--	--	--
68	5 a	C	204	12.6	0.50/0.10	0.42	0.08/C	--	--	--	--	--	--	--	--	--	--	--	--	--	--
69	3										VOID										

TABLE 2-1 -- (Continued)

TEST NO.	TEST PLAN ITEM	TEST EVENT SEQUENCE	TEST FACILITY BLDG. NO.	TEST COMPARTMENT VOID VOLUME (CU. FT.)	INITIAL MACH NO. VS. MACH NO. AT LN_2 DISCHARGE	NACELLE SECONDARY AIRFLOW (LB/SEC)	FUEL FLOW TO FIRE: RATE & LOC. (GPM)	LINE LENGTH (FT)	NOMINAL LINE SIZE (IN. O D)	WALL THICKNESS (IN.)	TYPE DISCHARGE NOZZLE	NOMINAL SIZE OF OUTLETS (IN X16)	LINE ORIFICE SIZE (IN. ID)	DEWAR FILL RATIO BY WEIGHT (PERCENT)	DEWAR SATURATION PRESSURE (PSIG)	DEWAR PRESSURE AT DISCHARGE (PSIG)	TOTAL WEIGHT OF LN_2 DISCHARGED (LB)	STABILIZED LN_2 FLOW RATE (LB/SEC)	LN_2 FLOW DURATION (SEC)	FIRE EXTINGUISHED	EXTINGUISHING TIME AFTER LN_2 ON (SEC)
70	8	D	203	NA	NA	10.49	2.50/D	21	1	0.040	Tee	8	None	104	110	115	25.1	2.56	10.5	No	--
71						10.40	2.50/D					16		79	110	110	42.8	4.12	10.0		--
72						10.32	1.00/D							92	100	50	26.6	--	10.0		--
73						10.58	1.00/D							86	90	70	31.6	--	10.4		--
74						10.19	1.00/D							98	103	103	42.1	4.47	9.6		--
75				NA		10.04	0.70/D							54	85	85	30.1	3.41	8.5	No	--
76				53		7.84	0.70/D							--	104	101	--	--	--	--	--
77						7.89	0.70/D							110	104	101	43.4	3.16	9.5	No	--
78						7.51	0.42/D							33	104	104	35.8	3.52	10.1	No	--
79		D1				1.78						16		99	100	98	33.6	3.45	10.2	Yes	1.21
80						1.74						8		60	100	90	13.8	1.51	10.1		1.35
81						1.73						6		44	92	85	7.4	0.82	10.2		0.79
82						1.75								107	105	105	6.1	0.48	11.1		0.94
83						3.78							None	101		88	8.4	0.93	9.9	Yes	5.30
84						3.94						6	0.376	89		95	7.5	0.78	10.0	No	--
85						3.93						8	0.329	81		93	8.6	0.92	10.3	No	--
86						3.93	0.42/D					6	None	71		90	8.5	0.96	10.0	Yes	5.22
87						3.79	0.17/D							12		82	7.4	0.91	10.1	Yes	6.52
88						3.79	0.10/D							5	105	80	5.2	0.68	10.5	No	--
89						3.87						6		102	87	87	9.4	0.91	10.5	No	--
90						3.85						8	None	92		88	15.4	1.61	10.4	Yes	2.93
91						3.81						10	0.376	77		85	11.3	1.00	10.5	Yes	3.65
92						5.83						10	0.376	64		80	9.6	0.91	10.5	No	--
93						5.75						8	None	52		88	14.5	1.34	10.0	Yes	3.11
94						5.73						8	0.464	36		78	10.6	1.01	10.1	No	--
95						5.71	0.10/D					10	0.464	24		77	12.7	1.18	10.4	Yes	3.33
96						5.72	0.42/D					8	0.464	12	87	68	9.0	0.85	9.9	No	--
97						5.86						6	None	84	102	102	11.6	1.24	10.2		--
98						5.86						6	None	66		95	9.6	0.91	10.2		--
99						5.86						10	0.376	56		92	10.3	1.04	9.9		--
100						5.92						12	0.376	44		97	10.5	1.00	9.8		--
101						5.89						8	0.464	29		87	10.8	1.01	10.2	No	--
102						5.82	0.42/D					10	0.464	18	102	80	13.2	1.37	10.1	Yes	2.89
103						6.98	1.00/D					10	None	104	80	80	20.6	1.99	10.1	No	--
104						7.04						16		80		87	29.0	2.83	10.4	Yes	2.03
105						7.04						12		51		77	21.3	2.15	9.8	Yes	2.01
106						7.03								27		65	18.4	1.80	10.0	No	--
107						7.04								108		75	27.7	2.54	10.1	Yes	1.76
108						7.03								81		66	23.3	2.31	10.4	No	--
109						7.04								54		67	22.6	2.29	10.3	Yes	2.15
110						6.99								30		67	18.6	1.86	10.1	No	--
111						6.93						12		12	80	95	--	--	--	--	--
112						6.96						10		96	105	105	26.2	2.66	10.2	Yes	1.91
113						6.95						8		69		95	15.6	1.57	9.8	No	--
114						6.96	1.00/D					10		54		87	21.3	1.98	10.0		--
115						6.96	0.42/D					10		32		82	17.1	1.62	10.0		--
116						6.84	1.00/D					8		99		108	18.4	1.81	10.4	No	--
117						6.74						0.453(a)		80		103	22.9	2.41	10.4	Yes	2.38
118						6.75						0.453(a)		56		95	20.0	1.97	10.1	No	--
119						6.74					Tee	12		36		85	22.7	2.22	10.0	No	--
120						6.77					PT(d)	0.458(b)	None	88		105	28.5	2.89	10.0	Yes	1.20
121						6.71							0.804	58	105	95	20.4	2.11	10.1		1.32
122						6.73							0.656	101	109	109	26.2	2.76	10.1		1.41
123						6.73								74		100	22.4	2.39	10.1		1.35
124						6.71								41		90	18.4	2.01	10.0	Yes	1.58
125						6.71							0.656	32	109	81	15.9	1.52	10.3	No	--
126						6.85							0.464	102	110	110	19.2	1.83	10.0	Yes	1.65
127						6.85							0.464	82		102	18.3	1.80	10.2	Yes	1.56
128						6.85	1.00/D						0.464	63		92	16.2	1.52	10.1	No	--
129						6.77							None	41	110	82	--	1.92	20.0	NA	NA
130						7.32							0.656	100	108	108	25.8	2.69	9.9	Yes	1.53
131						3.76							0.376	78	108	100	14.0	1.44	10.4	Yes	1.58
132						3.69								59	108	105	12.0	1.15	9.9	Yes	1.57
133						3.69								48		104	11.6	1.19	9.9		1.60
134						3.69								37		97	11.8	1.04	10.4		1.51
135						3.82								20		90	9.4	0.99	9.8	Yes	1.74
136		D1				3.82							0.376	12	108	84	7.6	0.70	10.3	No	--
137		D2				3.79							0.329	100		85	13.6	0.89	15.9	Yes	2.70
138	8	D2	203	53	NA	3.79	1.00/D	21	1	0.040	PT(d)	0.458(b)	0.251	86	85	90	4.4	0.39	9.8	No	--

TABLE 2-1 -- (Continued)

TEST NO.	TEST PLAN ITEM	TEST EVENT SEQUENCE	TEST FACILITY BLDG. NO.	TEST COMPARTMENT VOID VOLUME (CU. FT.)	INITIAL MACH NO. VS. MACH NO. AT LN_2 DISCHARGE	NACELLE SECONDARY AIRFLOW (LB/SEC)	FUEL FLOW TO FIRE: RATE & LOC. (GPM)	LING LENGTH (FT)	NOMINAL LINE SIZE (IN. O D)	WALL THICKNESS (IN.)	TYPE DISCHARGE NOZZLE	NOMINAL SIZE OF OUTLETS (IN.X16)	LINE ORIFICE SIZE (IN. ID)	DEWAR FILL RATIO BY WEIGHT (PERCENT)	DEWAR SATURATION PRESSURE (PSIG)	DEWAR PRESSURE AT DISCHARGE (PSIG)	TOTAL WEIGHT OF LN_2 DISCHARGED (LB)	STABILIZED LN_2 FLOW RATE (LB/SEC)	LN_2 FLOW DURATION (SEC)	FIRE EXTINGUISHED	EXTINGUISHING TIME AFTER LN_2 ON (SEC)
139	8	D2	203	53	NA	3.79	1.00/D	21	1	0.040	PT	0.458(b)	0.329	79	95	85	7.5	0.88	10.7	Yes	2.53
140		D1		40		3.14	0.42/D				Tee	10	0.329	56	110	110	9.7	0.86	10.3	Yes	3.59
141						3.14							0.251	46		106	4.9	0.39	10.3	No	--
142						3.13							0.329	39		104	9.2	0.88	11.0	Yes	4.43
143						4.68								28		104	6.6	0.68	9.1	No	--
144						4.64								103		110	10.4	1.04	9.6	Yes	3.21
145						5.47								90		110	9.5	0.95	10.5		3.18
146						5.47						10		81		106	9.2	0.97	10.2		3.13
147						5.47						8		70		102	8.6	0.83	10.5		3.82
148						5.41						8		57		100	7.9	0.76	10.0	Yes	3.70
149						5.41						8		49		96	7.5	0.83	10.1	No	--
150						6.24						10		39		95	7.6	0.72	9.9		--
151												12	0.329	32		92	7.0	0.71	10.0		--
152												12	0.376	24		86	9.6	0.91	10.2	No	--
153						6.24						12	0.464	15	110	77	12.0	1.10	10.3	Yes	2.11
154						5.77						8	None	103	100	100	17.8	1.73	10.1	Yes	1.46
155						5.77						6		85		96	9.0	0.94	9.8	No	--
156						5.77						8		77		93	14.8	1.47	9.9	Yes	1.99
157						7.59						10		59		100	10.6	1.07	--	No	--
158												12		48		97	26.4	2.48	10.6	Yes	1.23
159												10	None	107		99	27.4	2.62	10.6	Yes	1.77
160						7.59							0.656	79		91	19.8	2.00	10.6	No	--
161						7.58							0.928	60		83	23.2	1.94	10.9	No	--
162						7.58							None	36		75	16.4	1.65	10.3	No	--
163						7.48							0.656	107		105	24.8	2.40	10.3	Yes	1.63
164							0.42/D						0.656	81		97	21.6	2.03	10.3	No	--
165							1.00/D						0.928	60		89	20.4	1.91	10.6		--
166						7.48							None	39	100	78	17.4	1.71	10.0		--
167						7.46							0.656	103	103	102	24.4	2.31	10.1		--
168						7.46							None	79	103	96	23.4	2.37	10.3	No	--
169						7.62	1.00/D					10	None	97	109	109	26.1	2.66	10.0	Yes	1.57
170						0.69	0.10/D					4	None	70		101	4.6	0.54	9.9		3.95
171						0.69							0.376	65		100	4.2	0.50	10.1		3.81
172						0.69							0.329	63		100	3.8	0.34	10.4		1.75
173						0.68							0.251	50		100	3.0	0.32	10.5		2.18
174														43		90	2.6	0.27	10.4		1.97
175														27		83	1.8	0.21	9.4	Yes	2.28
176						0.68							0.251	18		75	2.8	0.25	10.4	No	--
177						0.99							0.656	15	109	73	2.6	0.25	10.5		--
178						0.99							0.656	47	80	80	3.6	0.34	10.5		--
179						0.99						4	None	43		80	3.4	0.35	10.4	No	--
180						0.98						6	None	38		95	7.2	0.71	10.1	Yes	4.00
181				40		0.97						6	0.464	28		88	7.0	0.57	11.8		4.98
182				53		0.64						4	0.251	17		105	2.8	0.29	10.3		1.39
183														13		85	2.0	0.19	10.6		1.62
184														10		75	2.2	0.20	10.0		1.77
185														6		65	1.4	0.14	10.3		4.08
186						0.64						4		[illegible]		50	0.8	0.09	9.4	Yes	1.55
187						0.67						3	0.251	[illegible]		90	1.7	0.16	10.3	No	--
188						0.97						4	None	[illegible]		100	5.0	0.46	10.2	No	--
189						0.95						6	0.376	[illegible]		90	6.7	0.58	10.3	Yes	6.67
190						0.95	0.10/D					6	0.329	[illegible]	80	92	6.1	0.52	10.8	No	--
191						8.99	1.00/D					16	None	91	112	112	35.2	3.61	9.9	Yes	1.15
192						8.99						16		55		98	28.0	2.81	10.3	Yes	1.20
193						9.01						12		102		110	32.6	3.32	9.9	Yes	2.47
194						9.01	1.00/D					12		68	112	100	26.2	2.70	10.0	No	--
195						9.00	0.42/D					16		96	109	109	35.6	3.60	9.9	Yes	1.05
196						9.00	0.42/D					16		60	109	96	27.6	2.80	10.2	Yes	1.00
197						8.99	0.42/D				Tee	16	None	31	109	82	23.0	2.25	10.0	No	--
198						5.77	0.42/D				PT	0.458(b)	0.376	106	107	107	14.0	1.27	10.8	Yes	1.91
199						5.77							0.376	91		105	12.0	1.16	9.9	No	--
200						8.99							0.656	79		100	21.8	2.37	9.8	No	--
201						9.12							None	50	107	107	25.0	2.64	10.2	No	--
202						9.08								101	115	115	28.8	3.22	9.7	Yes	0.82
203	8	D1	203	53		9.08	0.42/D	21		0.040	PT	0.458(b)		71	115	102	26.8	2.81	10.0	No	--
204	9	NA	204	NA		NA	NA	32.5		0.065	OE(a)	16		101	105	105	46.9	2.72	19.9	NA	NA
205														61	105	110	7.8	2.67	20.2		
206														35	105	105	11.6	2.36	12.0		
207	9	NA	204	NA	NA	NA	NA	32.5	1	0.065	OE(a)	16	None	86	70	75	34.0	2.30	16.0	NA	NA

TABLE 2-1 -- (Continued)

TEST NO.	TEST PLAN ITEM	TEST EVENT SEQUENCE	TEST FACILITY BLDG. NO.	TEST COMPARTMENT VOID VOLUME (CU. FT.)	INITIAL MACH NO. VS. MACH NO. AT LN_2 DISCHARGE	NACELLE SECONDARY AIRFLOW (LB/SEC)	FUEL FLOW TO FIRE: RATE & LOC. (GPM)	LINE LENGTH (FT)	NOMINAL LINE SIZE (IN. O D)	WALL THICKNESS (IN.)	TYPE DISCHARGE NOZZLE	NOMINAL SIZE OF OUTLETS (IN.X16)	LINE ORIFICE SIZE (IN.ID)	DEWAR FILL RATIO BY WEIGHT (PERCENT)	DEWAR SATURATION PRESSURE (PSIG)	DEWAR PRESSURE AT DISCHARGE (PSIG)	TOTAL WEIGHT OF LN_2 DISCHARGED (LB)	STABILIZED LN_2 FLOW RATE (LB/SEC)	LN_2 FLOW DURATION (SEC)	FIRE EXTINGUISHED	EXTINGUISHING TIME AFTER LN_2 ON (SEC)
208	9	NA	204	NA	NA	NA	NA	32.5	1	0.065	OE(e)	16	None	34	70	69	27.2	1.70	16.9	NA	NA
209														64	70	70	34.6	2.22	16.8		
210														86	40	40	25.4	1.60	17.0		
211														67	40	40	24.8	1.44	16.9		
212														34	40	40	19.6	1.28			
213											OE(e)	16		85	100	100	43.4	2.72			
214											PT	0.458(b)		86	100	100	39.0	2.52			
215														66	105	100	36.8	2.38			
216														34	100	100	30.6	2.20	16.9		
216A														33	100	100	23.0	2.20	14.5		
217														79	70	70	19.8	2.10	14.5		
217A														88	70	70	21.6	2.10	14.5		
218														33	70	70	22.6	1.66	14.7		
219														85	40	40	16.2	1.32	14.5		
220														68	40	40	14.8	1.22	14.6		
221											PT	0.458(b)		33	40	40	11.4	0.88	14.5		
222											4FN(f)	0.645(b)		85	100	100	34.0	2.50			
223														32	100	100	10.6	2.18			
224														85	70	70	27.8	2.01			
225														34	70	70	20.0	1.52	14.5		
226														85	40	40	14.0	1.08	14.6		
227									1	0.065	4FN(f)	0.645(b)		34	40	40	14.2	1.04	14.5		
228									1/2	0.035	OE	8		84	105	105	4.8	0.44			
229														65	105	100	4.2	0.40			
230														34	105	100	4.4	0.34			
231														84	45	40	2.0	0.14			
232														84	75	70	3.0	0.22			
233														63	75	70	2.8	0.28	14.5		
234	9	NA		NA	NA	NA	NA	32.5	1/2	0.035	OE	8		33	40	40	2.6	0.24	8.2	NA	NA
235	7a	A		12.6	0.50/0.50	2.28	0.46/B	21	1	0.040	Tee	12		24	100	95	17.5	2.23	9.9	Yes	1.50
236						2.50						0.345		91	102	105	10.6	1.05		No	--
237						2.31						8		--		105	14.4	1.46		Yes	1.70
238						2.42							None	60		100	14.4	1.45	9.9	Yes	3.35
239						2.39							0.464	49		95	12.0	1.21	10.0	No	--
240	7a					2.43	0.46/B						None	38	102	97	13.0	1.30	9.9	No	--
241	7&3					2.64	0.30/B					8	0.464	102	96	96	11.4	1.15		No	--
242						2.43						10	0.464	87	96	96	14.4	1.45		Yes	4.29
243						2.36						8	None	46	100	100	13.4	1.36		Yes	5.07
244	7&3					2.48		21				8		32		100	11.0	1.27		Yes	4.58
245	3					2.50		80				8		99		87	5.6	0.56(c)	9.9	No	--
246		A				2.55						16		95		100	9.0	0.81(c)	11.1	No	--
247		E				2.52						16		96	100	100	24.0	1.33(c)	20.0	Yes	12.51
248						2.48						12		102	105	105	19.8	1.14(c)	18.5	Void	Void
249						2.46						12		99		110	24.6	1.25(c)	20.0	Yes	10.36
250						2.48						12		63		105	24.2	1.19(c)	20.4	Yes	11.62
251						2.49						8		99		105	14.6	0.73(c)	20.1	No	--
252	3	E				2.41		80				12	None	97		105	25.2	1.24(c)	19.7	Yes	11.99
253	7b	A				2.48		21				12	0.464	63	105	108	18.0	1.79	9.9	Yes	3.48
254	7b	A				2.49						8	None	96	108	108	15.8	1.60	9.9	Yes	5.01
255	7b	A		12.6	0.50/0.50	2.50	0.30/B				Tee	8	0.464	94	108	108	13.4	1.35	9.9	No	--
256	6	F		3.8	NA	NA	NA				OE	16		9[illegible]	110	106	75.7	1.68	45.5	NA	NA
257														1[illegible]	110	--	61.4	1.38	44.7		
258														104	105	100	69.0	1.56	44.2		
259	6	F	204	3.8	NA	NA	NA	21	1	0.040	OE	16	0.464	101	100	101	60.0	1.51	39.8	NA	NA

NOTES: (a) Inside diameter in inches
(b) Total Outlet Area in in^2
(c) Rates are average LN_2 flow rates
(d) PT = Perforated Tube
(e) OE = Open End
(f) FN = Fog Nozzle

APPENDIX C

TEST EVENT SCHEDULES

TEST EVENT SCHEDULE A

TIME (sec)	EVENT
0	Stabilize Tunnel Velocity and JT-12 Power
10	Spark Ignition On
15	Spray Release Fuel
20	Retard JT-12 to Cutoff
25	Ignition Off
30	Initiate LN_2 Discharge
40	Fuel Spray Off Terminate LN_2 Discharge CO_2 if Required

TEST EVENT SCHEDULE B

TIME(sec)	EVENT
0	Stabilize Tunnel Velocity and Jt-12 Power
15	Spark Ignition On
20	Fuel Spray On
25	Spark Ignition Off
50	Retard JT-12 to Cutoff
60	Fuel Spray Off Initiate LN_2 Discharge if Specified
90*	Terminate LN_2 Discharge CO_2 if Required

* Approximate Time. Actual Termination to occur when four thermocouples in fire indicate $\leq$ 500°F.

TEST EVENT SCHEDULE C

TIME (sec)	EVENT
0	Stabilize Tunnel Air Velocity and JT-12 Power
15	Spark Ignition On
20	Fuel Spray On
25	Spark Ignition Off
20	Chop JT-12 When Fire Detector Alarms
60	Fuel Spray Off Initiate LN_2 Discharge if Specified
90*	Terminate LN_2 Discharge CO_2 if Required

* Approximate time. Actual termination to occur when four thermocouples in fire indicate $\leq$ 500°F.

TEST EVENT SCHEDULE D

TIME (sec)	EVENT
0	Start Fan
15	Spark Ignition On
18	Fuel Spray On
25	Spark Ignition Off
40	LN_2 On
50	LN_2 Off
55	Fuel Spray Off CO_2 if Required

TEST EVENT SCHEDULE D_1

TIME (sec)	EVENT
0	Fan On
18	Spark Ignition and Fuel Spray On
20	Spark Ignition Off
40	LN_2 On
50	LN_2 Off
55	Fuel Spray Off CO_2 if Required

TEST EVENT SCHEDULE D_2

TIME (sec)	EVENT
0	Fan On
15	Spark Ignition and Fuel Spray On
18	Spark Ignition Off
25	LN_2 On
35	LN_2 Off
40	Fuel Spray Off CO_2 if Required

TEST EVENT SCHEDULE E

TIME (sec)	EVENT
0	Event Recorder and Oscillograph On
5	Spark Ignition On
10	Fuel Spray On
10	Fuel Spray On
15	Chop JT-12 Spark Ignition Off
25	Initiate LN_2 Discharge
45	Fuel Spray Off Terminate LN_2 Discharge CO_2 if Required

TEST EVENT SCHEDULE F

TIME (sec)	EVENT
0	Event Recorder On
5	Fuel Flow On
10	Oscillograph On
15	LN_2 On
55	LN_2 Off
90	Fuel Flow Off
105	Recorders Off

APPENDIX D

NITROGEN FLOW RATE CALIBRATIONS AS A FUNCTION OF NOZZLE, ORIFICE, AND TUBE SIZE

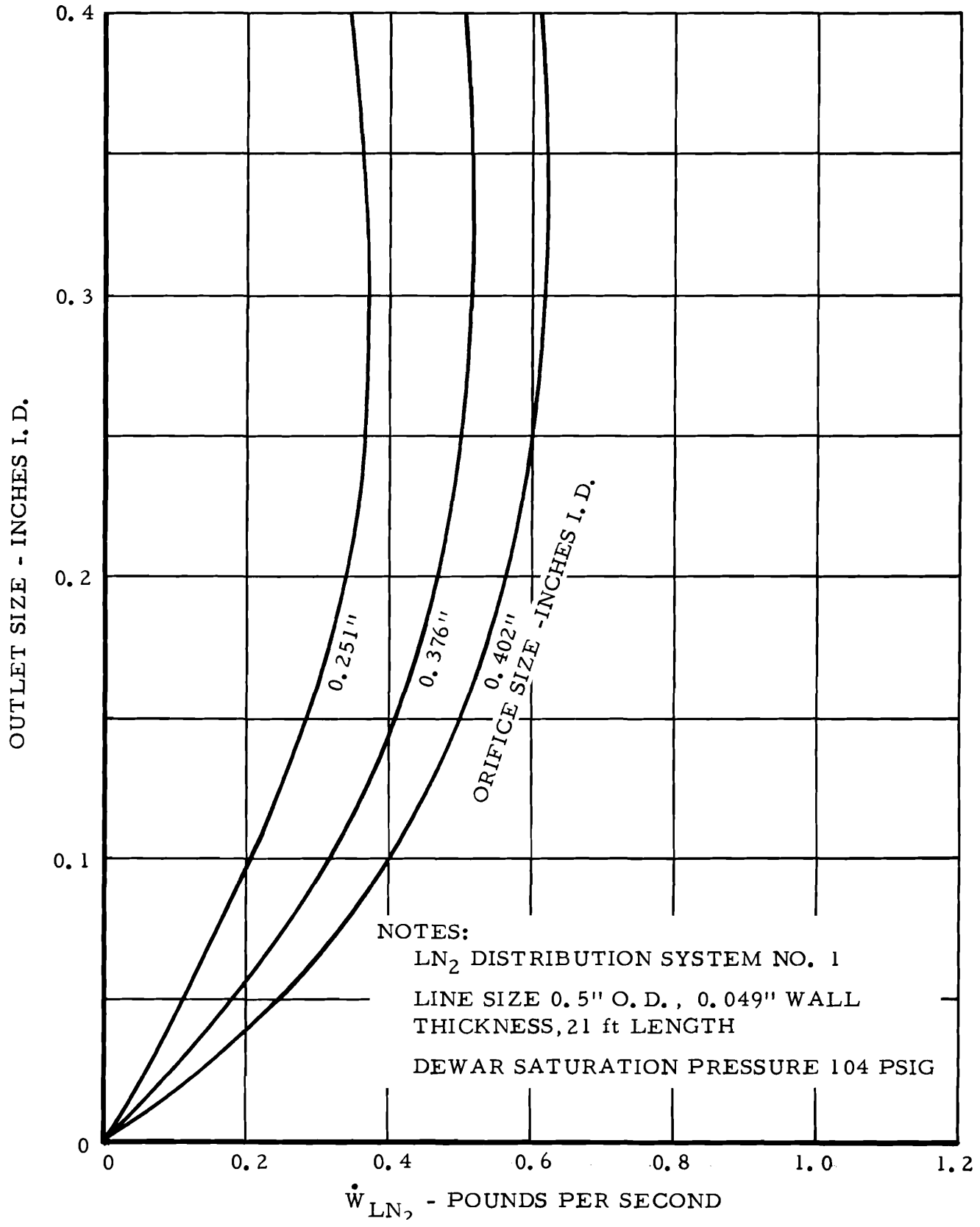

FIGURE 4-1 - NITROGEN FLOW RATE CALIBRATION FOR 21 FEET OF 1/2-INCH TUBING

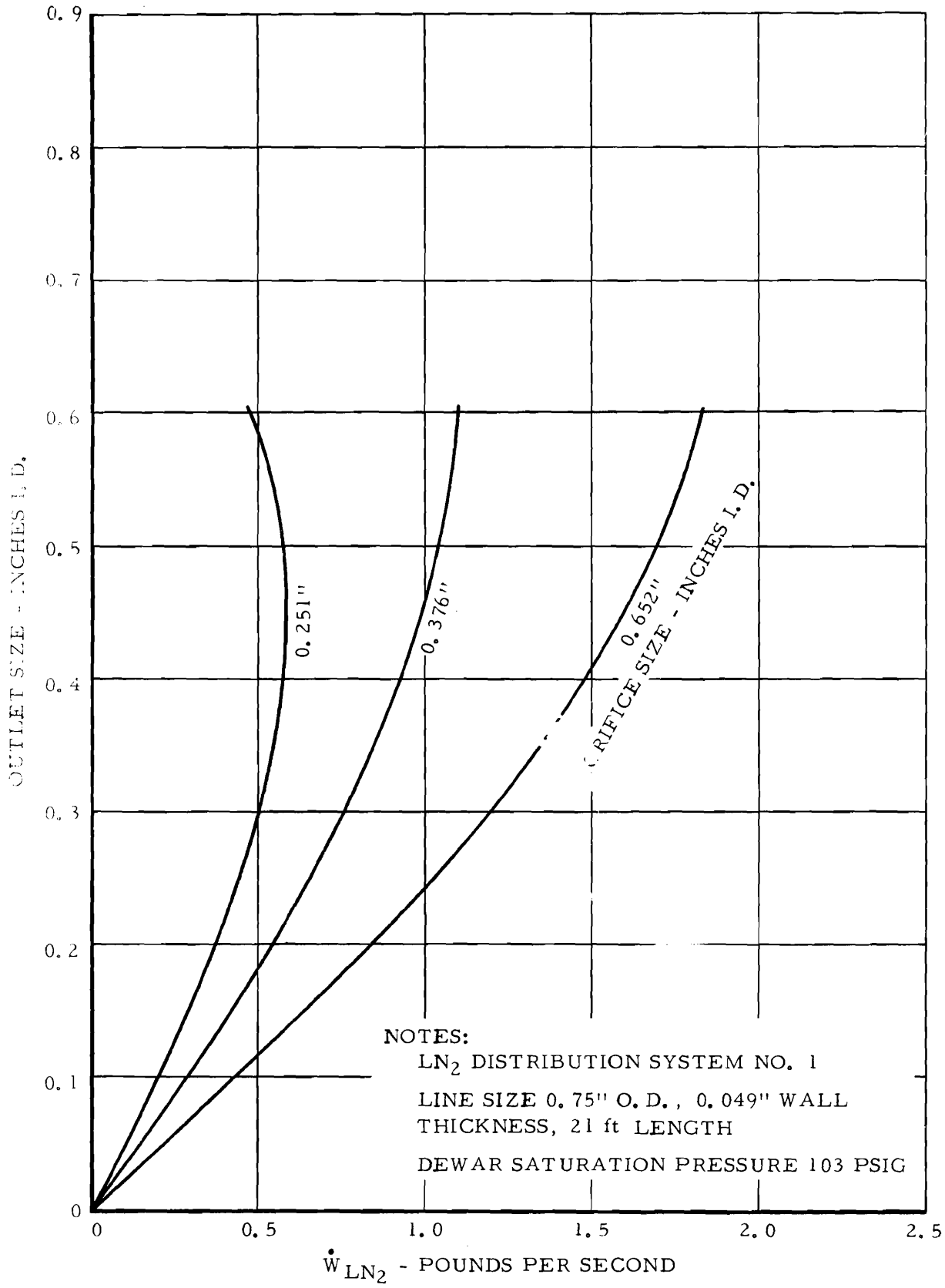

FIGURE 4-2 - NITROGEN FLOW RATE CALIBRATION FOR 21 FEET OF 3/4-INCH TUBING

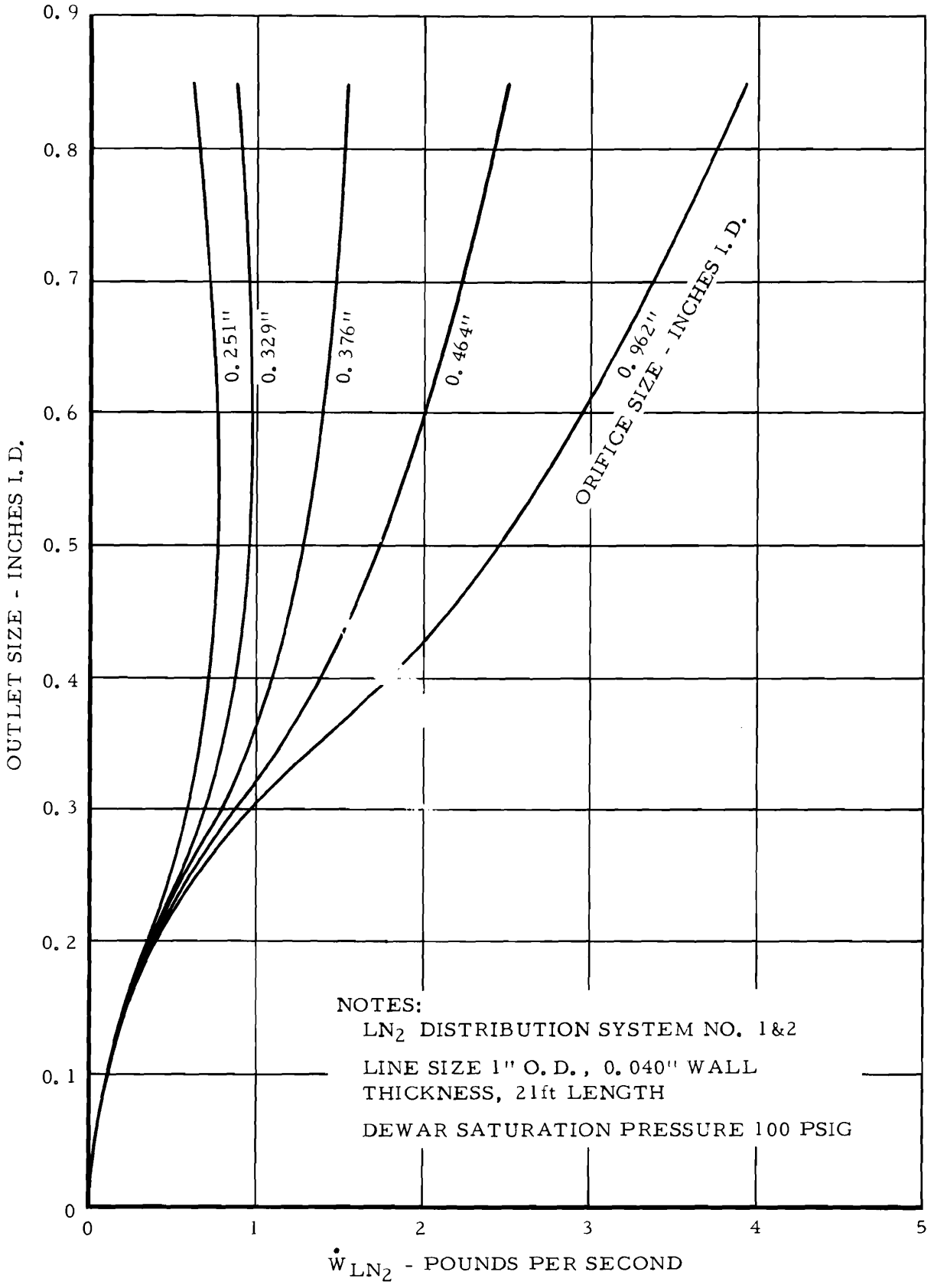

FIGURE 4-3 - NITROGEN FLOW RATE CALIBRATION FOR 21 FEET OF 1-INCH TUBING

APPENDIX E

LOCATION AND DESCRIPTION OF FUEL-TO-FIRE NOZZLES USED IN THE JET ENGINE TEST INSTALLATION

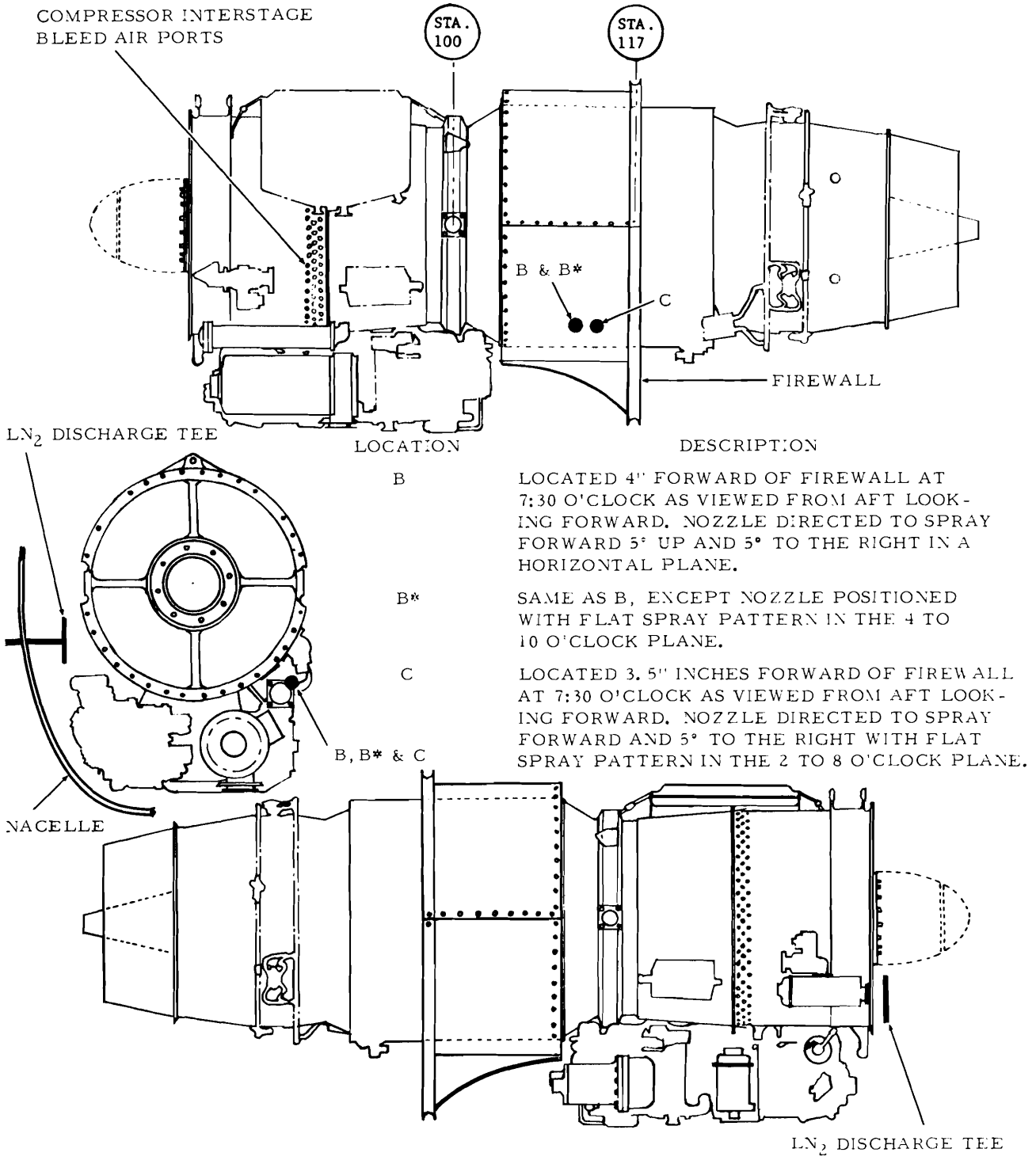

LOCATION	DESCRIPTION
B	LOCATED 4" FORWARD OF FIREWALL AT 7:30 O'CLOCK AS VIEWED FROM AFT LOOKING FORWARD. NOZZLE DIRECTED TO SPRAY FORWARD 5° UP AND 5° TO THE RIGHT IN A HORIZONTAL PLANE.
B*	SAME AS B, EXCEPT NOZZLE POSITIONED WITH FLAT SPRAY PATTERN IN THE 4 TO 10 O'CLOCK PLANE.
C	LOCATED 3.5" INCHES FORWARD OF FIREWALL AT 7:30 O'CLOCK AS VIEWED FROM AFT LOOKING FORWARD. NOZZLE DIRECTED TO SPRAY FORWARD AND 5° TO THE RIGHT WITH FLAT SPRAY PATTERN IN THE 2 TO 8 O'CLOCK PLANE.

FIGURE 5-1 LOCATION OF FUEL-TO-FIRE NOZZLES AND LN_2 DISCHARGE NOZZLE IN TEST ENGINE INSTALLATION

TABLE 5-1 -FUEL SPRAY NOZZLE DESCRIPTION

NOZZLE TYPE	SPRAY PATTERN	SPRAY ANGLE	ATOMIZATION	USED ON TESTS
1/8GG-3007 1/8GG-3004 1/8GG-3014	FULL CONE	30°	COARSE	44 thru 51 69 thru 86 96 THRU 169 191 THRU 255
T-400050 T-400025	FLAT, FAN TYPE	40°	FINE	64 THRU 68
54-21	HOLLOW CONE	81°	EXTRA FINE	31 THRU 43 52 THRU 62 87 THRU 95 189 and 190
68-21	HOLLOW CONE	62°	EXTRA FINE	63 170 THRU 188

APPENDIX F

TABULAR PRESENTATION OF DISTRIBUTION SYSTEM PRESSURES, TEMPERATURES, AND NITROGEN FLOWS FOR AN 80-FOOT-LONG PRESSURIZED LINE, AND 80- and 21-FOOT UNPRESSURIZED LINES*

*See Figure 6b for location of pressure and temperature probes.

TEST 46

Length: 21-ft Unpressurized
Valve: At Dewar

Fill Ratio: 95% @ 103 psig

Flow Rate: 1.38 lbs/sec
Nozzle: AN-834-16 tee w/AN-894-8 reducer bushings
Orifice: 0.464 inch

Time After LN_2 Discharged (sec)	P_1 (psig)	T_1 (°F)	P_2 (psig)	T_2 (°F)	W_{LN_2} (lbs)
0	Vacuum	+68	Vacuum	+68	94.0
1	84	-20	80	-34	93.2
2	87	-100	80	-192	92.0
3	89	-165	81	-281	90.8
4	87	-211	86	-289	89.4
5	85	-277	80	-295	88.6
6	83	-281	78	-296	87.2
7	82	-279	77	-296	85.8
8	82	-279	75	-296	84.4
9	80	-282	74	-298	82.6
10	79	-282	74	-298	81.4

TEST 193

Length: 21-ft Unpressurized
Valve: At Dewar

Fill Ratio: 102% @110 psig

Flow Rate: 3.32 lbs/sec
Nozzle: AN-834-16 tee w/AN-894-12 reducer bushings
Orifice: None

Time After LN_2 Discharged (sec)	P_1 (psig)	T_1 (°F)	P_2 (psig)	T_2 (°F)	W_{LN_2} (lbs)
0	----	+54	----	+54	102
1	49.9	-90	39.8	-247	99.2
2	52.4	-214	42.3	-310	96.0
3	51.4	-325	41.0	-312	92.7
4	50.9	-328	40.0	-311	89.8
5	50.2	-330	38.0	-312	86.6
6	48.9	-328	36.0	-314	83.2
7	48.1	-328	35.5	-313	80.2
8	47.6	-328	35.0	-312	77.2
9	46.4	-330	34.0	-314	73.6
10	45.4	-331	33.5	-314	70.6

TEST 246

Length: 80-ft Pressurized
Valve: Near Discharge Nozzle
Fill Ratio: 95% @ 100 psig

Flow Rate: 0.81 lbs/sec
Nozzle: AN-834-16 tee
Orifice: None

Time After LN_2 Discharged (sec)	P_1 (psig)	T_1 (°F)	P_2 (psig)	T_2 (°F)	W_{LN_2} (lbs)
0	104	68	AMB	88	94.2
1	108	-115	18	74	93.6
2	95	-305	14	67	93.0
3	104	-305	20	60	92.4
4	101	-305	18	53	91.4
5	103	-305	21	46	90.8
6	102	-305	22	30	90.4
7	100	-305	21	16	89.4
8	100	-305	22	2	88.4
9	99	-305	25	-30	87.6
10	98	-305	26	-84	86.8
11	95	-306	20	-126	86.0

TEST 247

Length: 80-ft Pressurized
Valve: Near Discharge Nozzle
Fill Ratio: 96% @ 100 psig

Flow Rate: 1.33 lbs/sec
Nozzle: AN-834-16 tee
Orifice: None

Time After LN_2 Discharged (sec)	P_1 (psig)	T_1 (°F)	P_2 (psig)	T_2 (°F)	W_{LN_2} (lbs)
0	102	74	AMB	82	95.6
1	104	-116	20	74	94.2
3	95	-300	16	67	94.2
3	103	-301	22	60	93.6
4	99	-301	20	53	93.0
5	101	-301	24	46	92.4
6	101	-301	25	28	92.0
7	98	-301	24	12	90.2
8	98	-301	26	-7	89.2
9	98	-301	29	-55	88.4
10	97	-301	30	-119	87.6
11	94	-302	30	-191	86.2
12	92	-302	29	-307	84.6
13	92	-304	27	-317	83.0
14	91	-304	27	-321	81.6
15	91	-304	26	-322	79.8

TEST 248

Length: 80-ft Pressurized
Valve: Near Discharge Nozzle
Fill Ratio: 102% @ 105 psig

Flow Rate: 1.14 lbs/sec
Nozzle: AN-834-16 tee w/AN-894-12 reducer bushings
Orifice: None

Time After LN_2 Discharged (sec)	P_1 (psig)	T_1 (°F)	P_2 (psig)	T_2 (°F)	W_{LN_2} (lbs)
0	107	67	AMB	91	99.0
1	109	-117	34	82	98.8
2	100	-293	29	74	98.4
3	107	-293	37	74	98.0
4	104	-295	35	67	97.6
5	104	-295	37	60	97.0
6	104	-296	41	39	96.2
7	103	-296	41	22	95.2
8	101	-296	40	2	94.4
9	99	-296	43	-29	94.2
10	98	-296	44	-93	93.2
11	97	-296	44	-153	91.6
12	96	-296	45	-250	90.0
13	96	-296	44	-307	88.4
14	95	-296	44	-307	87.0
15	95	-296	42	-307	85.4
16	94	-296	41	-307	84.0
17	94	-296	40	-307	82.4
18	94	-296	38	-307	80.1
19	93	-305	37	-319	79.8

TEST 249

Length: 80-ft Pressurized
Valve: Near Discharge Nozzle
Fill Ratio: 99% @ 110 psig

Flow Rate: 1.25 lbs/sec
Nozzle: AN-834-16 tee w/AN-894-12 reducer bushings
Orifice: None

Time After LN_2 Discharged (sec)	P_1 (psig)	T_1 (°F)	P_2 (psig)	T_2 (°F)	W_{LN_2} (lbs)
0	108	43	AMB	86	99.6
1	108	-134	33	81	98.4
2	100	-302	30	75	97.2
3	109	-302	38	72	96.4
4	103	-305	34	61	95.4
5	107	-305	40	54	95.0
6	105	-305	42	35	94.2
7	103	-305	40	14	93.4
8	104	-305	43	-7	92.2
9	103	-305	46	-47	91.6
10	102	-305	45	-100	90.2
11	100	-305	45	-161	88.8
12	97	-305	45	-265	87.6
13	97	-305	44	-315	86.2
14	96	-305	43	-319	84.6
15	96	-305	41	-320	82.8
16	96	-305	41	-320	81.6
17	95	-305	39	-320	80.2
18	94	-305	38	-321	78.4
19	94	-305	37	-322	77.2
20	93	-306	35	-323	74.6

TEST 250

Length: 80-ft pressurized
Valve: Near Discharge Nozzle

Fill Ratio: 63% @105 psig

Flow Rate: 1.19 lbs/sec
Nozzle: AN-834-16 tee w/AN-894-12 reducer bushings
Orifice: None

Time After LN_2 Discharged (sec)	P_1 (psig)	T_1 (°F)	P_2 (psig)	T_2 (°F)	W_{LN_2} (lbs)
0	110	53	AMB	74	62.6
1	111	-147	36	67	62.6
2	103	-300	31	60	61.4
3	108	-300	38	60	60.8
4	105	-300	35	46	60.2
5	106	-300	39	39	59.4
6	106	-300	42	28	58.6
7	104	-300	42	9	57.8
8	102	-300	41	-13	57.2
9	101	-300	43	-51	56.4
10	99	-300	46	-123	55.2
11	96	-300	44	-192	53.8
12	95	-300	44	-293	52.2
13	93	-300	42	-312	51.0
14	93	-300	41	-313	49.8
15	93	-300	40	-313	48.4
16	92	-300	39	-313	47.0
17	92	-300	38	-313	45.6
18	90	-300	36	-313	44.0
19	90	-300	35	-313	42.4
20	89	-300	34	-313	41.0

TEST 251

Length: 80-ft Pressurized
Valve: Near Discharge Nozzle
Fill Ratio: 99% @ 105 psig

Flow Rate: 0.73 lbs/sec
Nozzle: AN-834-16 tee w/AN-894-8 reducer bushings
Orifice: None

Time After LN_2 Discharged (sec)	P_1 (psig)	T_1 (°F)	P_2 (psig)	T_2 (°F)	W_{LN_2} (lbs)
0	109	74	2	91	97.6
1	115	-107	75	91	97.0
2	98	-249	62	82	96.6
3	113	-297	77	82	96.2
4	107	-301	73	82	95.6
5	108	-300	73	74	95.0
6	115	-300	81	74	94.2
7	105	-300	75	60	93.4
8	99	-300	67	53	92.6
9	109	-300	80	46	92.0
10	107	-300	79	29	91.4
11	105	-300	77	16	91.0
12	105	-300	75	3	90.2
13	105	-300	79	-20	90.0
14	105	-300	83	-63	89.2
15	104	-300	81	-103	88.8
16	102	-300	78	-138	88.4
17	101	-300	77	-163	87.2
18	101	-300	79	-230	86.2
19	101	-300	79	-298	85.0
20	101	-300	79	-300	83.8

TESTS 252

Length: 80-ft Unpressurized
Valve: At Dewar
Fill Ratio: 97% @ 105 psig

Flow Rate: 1.24 lbs/sec
Nozzle: AN-834-16 tee w/AN-894-12 reducer bushings
Orifice: None

Time After LN_2 Discharged (sec)	P_1 (psig)	T_1 (°F)	P_2 (psig)	T_2 (°F)	W_{LN_2} (lbs)
0	8	91	AMB	96	96.4
1	114	-132	28	96	95.8
2	121	-292	33	91	94.8
3	123	-293	39	82	94.6
4	120	-295	38	74	93.2
5	120	-295	39	60	92.0
6	121	-295	44	46	91.0
7	118	-295	42	26	90.0
8	116	-295	42	8	89.2
9	116	-295	46	-25	88.2
10	115	-295	49	-90	87.6
11	113	-295	47	-163	86.6
12	111	-295	47	-270	84.6
13	111	-295	46	-304	83.0
14	111	-295	45	-307	81.6
15	110	-295	42	-309	80.0
16	109	-295	42	-309	78.4
17	109	-295	41	-309	77.0
18	108	-295	38	-309	75.2
19	107	-295	38	-309	73.6
20	107	-295	38	-309	72.4

APPENDIX G

TABULATION OF NITROGEN FLOW PARAMETERS FOR VARIOUS SYSTEM COMPONENTS AND DISCHARGE NOZZLE CONFIGURATIONS*

*See Figure 22 for location of pressure and temperature probes.

Test No. 204

Time (sec)	P_1 (psig)	T_1 (°F)	P_a (psig)	P_b (psig)	P_c (psig)	P_d (psig)	P_2 (pisg)	T_2 (°F)
1	84	NR*	76	71	68	62	30	NR
2	90		83	80	77	73	42	
3	90		81	52	75	70	44	
4	87		78	75	72	67	42	
5	85		76	73	70	65	42	
6	84		75	72	69	64	39	
7	82		76	70	67	61	37	
8	81		74	69	64	60	33	
9	80		74	69	63	58	32	
10	79		73	68	63	58	32	
11	78		73	68	63	58	33	
12	77		73	68	63	58	32	
13	77		72	68	63	58	32	
14	77		72	67	63	58	32	
15	76		71	66	61	57	31	
16	75		70	65	60	56	31	
17	74		70	65	60	56	30	
18	74		68	63	58	54	28	
19	73		66	61	56	52	27	
20	71	NR	61	57	52	48	24	NR

Test No. 205

Time (sec)	P_1 (psig)	T_1 (°F)	P_a (psig)	P_b (psig)	P_c (psig)	P_d (psig)	P_2 (psig)	T_2 (°F)
1	104	NR	96	95	83	88	41	NR
2	110		100	96	93	88	53	
3	108		98	93	89	84	53	
4	105		95	90	86	80	53	
5	102		93	87	83	77	50	
6	100		92	85	79	74	34	
7	97		90	83	76	71	42	
8	95		89	81	75	70	41	
9	93		87	80	74	69	40	
10	91		86	78	73	68	39	
11	89		83	76	71	66	38	
12	87		80	73	68	64	36	
14	83		77	71	65	61	35	
15	82		75	68	63	59	33	
16	80		69	63	57	52	28	
17	77		67	63	57	53	29	
18	75		65	61	55	51	28	
19	73		64	59	54	50	26	
20	71	NR	62	57	52	49	25	NR

*NR = Not Recorded

TEST No. 206

Time (sec)	P_1 (psig)	T_1 (°F)	P_a (psig)	P_b (psig)	P_c (psig)	P_d (psig)	P_2 (pisg)	T_2 (°F)
1	103	-138	95	88	85	80	47	-99
2	100	-273	94	91	88	83	50	-297
3	100	-292	91	86	83	78	48	-302
4	97	-294	87	83	79	73	47	-302
5	93	-295	83	80	76	71	45	-302
6	89	-296	80	76	72	67	41	-302
7	86	-296	78	73	67	62	37	-303
8	83	-297	76	70	65	60	34	-305
9	80	-298	74	68	63	58	33	-305
10	77	-299	72	66	61	57	31	-305
11	75	-299	70	65	60	55	30	-306
12	73	-300	68	62	59	55	30	-306
13	62	-302	52	42	39	35	17	-312

TEST No. 207

Time (sec)	P_1 (psig)	T_1 (°F)	P_a (psig)	P_b (psig)	P_c (psig)	Pd (psig)	P_2 (pisg)	T_2)°F)
1	71	-78	64	64	62	58	30	-50
2	74	-246	67	67	65	62	35	-297
3	74	-288	66	65	62	59	34	-316
4	73	-297	64	63	60	56	35	-315
5	71	-299	63	62	59	54	35	-315
6	70	-299	62	61	58	53	34	-315
7	68	-299	61	60	58	52	32	-315
8	68	-299	61	59	56	51	30	-315
9	67	-299	61	58	54	50	27	-315
10	66	-299	61	58	53	49	26	-315
11	66	-299	60	58	53	49	25	-317
12	65	-299	60	58	52	48	25	-317
13	64	-302	60	57	52	48	25	-317
14	64	-300	60	57	52	48	25	-316
15	63	-302	59	56	51	47	25	-317
16	62	-302	58	55	51	47	24	-318

TEST No. 208'

Time (sec)	P_1 (psig)	T_1 (°F)	P_a (psig)	P_b (psig)	P_c (psig)	P_d (psig)	P_2 (psig)	T_2 (°F)
1	61	-70	54	54	51	48	23	-67
2	61	-227	54	57	54	51	28	-247
3	60	-286	53	52	49	474	25	-321
4	58	-299	51	51	48	45	26	-319
5	56	-303	50	49	46	43	25	-319
6	54	-305	48	47	44	41	24	-319
7	53	-305	46	46	44	39	24	-319
8	52	-305	46	45	43	39	22	-319
9	51	-305	46	44	41	38	20	-319
10	51	-305	45	44	41	37	19	-319
11	50	-305	44	43	39	36	17	-322
12	49	-305	44	42	39	35	16	-322
13	48	-307	44	42	38	35	16	-322
14	47	-307	43	41	37	34	15	-322
15	46	-307	42	40	36	33	15	-322
16	45	-307	41	39	36	33	15	-322

TEST No. 209

Time (sec)	P_1 (psig)	T_1 (°F)	P_a (psig)	P_b (psig)	P_c (psig)	P_d (psig)	P_2 (psig)	T_2 (°F)
1	72	-93	65	65	62	59	3	-58
2	74	-257	67	67	65	61	35	-305
3	74	-292	66	65	62	58	35	-315
4	72	-298	64	63	60	56	35	-315
5	70	-300	62	61	58	54	35	-315
6	68	-302	61	60	57	52	33	-315
7	67	-302	60	59	56	51	30	-317
8	66	-302	59	58	54	50	28	-317
9	65	-302	59	56	52	48	26	-317
10	65	-302	59	57	52	48	25	-317
11	64	-302	59	56	52	48	25	-317
12	63	-302	58	56	51	47	25	-317
13	62	-302	58	55	51	47	25	-317
14	61	-302	57	55	50	47	25	-317
15	61	-302	56	54	50	46	24	-317
16	60	-304	55	53	49	45	23	-317

TEST No. 210

Time (sec)	P_1 (psig)	T_1 (°F)	P_a (psig)	P_b (psig)	P_c (psig)	P_d (psig)	P_2 (psig)	T_2 (°F)
0.7	43	-10	39	38	35	32	13	-46
1	46	-51	40	42	41	37	16	-46
1.5	45	-115	38	31	28	25	10	-63
2	48	-190	42	43	42	40	21	-154
3	49	-284	43	42	41	38	19	-324
4	48	-303	41	41	40	37	20	-325
5	47	-309	41	40	38	35	20	-325
6	47	-312	40	39	37	35	20	-324
7	45	-312	39	38	36	33	19	-323
8	44	-312	37	37	35	32	18	-323
9	43	-312	37	37	35	31	18	-323
10	43	-314	37	37	34	31	17	-325
11	43	-314	37	36	34	31	16	-324
12	43	-314	37	36	34	31	15	-325
13	43	-314	37	36	33	31	13	-326
14	42	-314	37	36	33	31	13	-326
15	42	-314	37	36	33	31	13	-326
16	42	-314	37	36	33	31	13	-326
						31		

TEST No. 211

Time (sec)	P_1 (psig)	T_1 (°F)	P_a (psig)	P_b (psig)	P_c (psig)	P_d (psig)	P_2 (psig)	T_2 (°F)
0.7	43	18	39	28	38	34	27	-43
1	47	-62	40	40	36	33	14	-48
1.5	45	-123	37	30	34	24	2	-72
2	48	-218	42	44	41	40	19	-209
3	48	-336	42	41	39	37	18	-325
4	47	-309	41	41	39	37	20	=332
5	46	-316	40	40	38	35	19	-333
6	45	-318	39	39	36	34	19	-330
7	44	-319	38	38	35	33	19	-331
8	43	-320	37	37	35	32	18	-331
9	43	-320	36	36	34	31	17	-331
10	42	-320	37	37	34	31	16	-332
11	42	-320	37	36	33	31	15	-333
12	42	-320	37	36	33	31	14	-333
13	42	-320	37	36	33	30	13	-333
14	41	-323	37	36	32	30	12	-333
15	41	-320	37	36	32	30	13	-333
16	41	-320	36	36	32	30	13	-333

TEST No. 212

Time (sec)	P_1 (psig)	T_1 (°F)	P_a (psig)	P_b (psig)	P_c (psig)	P_d (psig)	P_2 (psig)	T_2 (°F)
0.7	39	-30	35	38	35	34	15	-77
1	42	-62	36	36	35	32	13	-80
1.5	41	-121	36	33	30	26	11	-93
2	41	-196	36	40	39	37	21	-149
3	36	-287	36	37	35	33	15	-318
4	36	-310	35	36	33	31	16	-335
5	35	-319	34	34	32	30	15	-336
6	34	-322	33	33	31	29	15	-334
7	32	-322	32	32	29	27	14	-335
8	32	-324	31	31	28	26	14	-335
9	31	-322	30	30	28	25	13	-335
10	30	-323	30	29	27	24	13	-336
11	29	-324	29	29	26	23	11	-337
12	28	-324	29	28	25	23	10	-338
13	28	-324	29	28	26	23	9	-336
14	28	-324	28	27	24	22	8	-338
15	27	-324	28	27	24	22	7	-338
16	26	-324	28	27	23	21	7	-338

TEST No. 213

Time (sec)	P1 (psig)	T_1 (°F)	P_a (psig)	P_b (psig)	P_c (psig)	P_d (psig)	P_2 (psig)	T_2 (°F)
1	89	NR	79	73	68	63	32	NR
2	98	↑	87	87	84	80	48	↑
3	98		87	85	81	77	49	
4	96		85	82	78	73	49	
5	93		82	80	76	71	48	
6	91		81	79	75	69	44	
7	90		81	77	71	66	41	
8	88		80	76	69	65	37	
9	86		78	74	68	64	36	
10	85		77	73	68	63	36	
11	84		77	73	67	63	36	
12	83		76	72	66	62	36	
13	82		75	72	66	62	36	
14	81		74	70	65	61	34	
15	80	↓	73	69	64	60	33	↓
16	78	NR	70	66	62	57	32	NR

TEST No. 214

Time (sec)	P_1 (psig)	T_1 (°F)	P_a (psig)	P_b (psig)	P_c (psig)	P_d (psig)	P_2 (psig)	T_2 (°F)
1	91	-91	84	85	84	81	63	-43
2	102	-257	96	96	96	94	81	-263
3	103	-286	95	93	91	89	77	-300
4	101	-292	93	90	88	85	72	-300
5	99	-293	91	88	86	83	70	-301
6	96	-294	88	85	83	79	66	-302
7	94	-296	86	83	81	76	62	-304
8	92	-296	85	81	78	74	58	-304
9	91	-296	85	79	74	70	53	-305
10	88	-297	83	77	73	69	49	-306
11	87	-297	81	76	72	67	47	-307
12	85	-297	80	75	71	66	46	-308
13	84	-297	79	74	70	65	44	-308
14	83	-297	78	73	69	65	43	-309
15	82	-297	77	73	69	64	43	-309
16	81	-297	76	72	68	63	42	-309

TEST No. 215

Time (sec)	P_1 (psig)	T_1 (°F)	P_a (psig)	P_b (psig)	P_c (psig)	P_d (psig)	P_2 (psig)	T_2 (°F)
1	NR	-96	89	92	92	89	69	-49
2	↑	-259	94	93	92	90	78	-261
3		-290	93	89	89	86	73	-301
4		-295	91	87	86	83	71	-302
5		-297	88	85	83	80	67	-303
6		-297	86	82	80	76	64	-304
7		-298	83	80	78	73	60	-305
8		-298	82	78	75	71	56	-306
9		-299	81	75	71	67	51	-307
10		-300	79	74	69	65	47	-308
11		-300	78	73	68	65	45	-309
12		-303	77	72	67	63	44	-309
13		-300	76	70	66	62	43	-310
14		-300	75	70	65	61	42	-310
15	↓	-300	73	69	64	60	41	-310
16	NR	-302	71	66	62	58	39	-311

TEST No. 216

Time (sec)	P_1 (psig)	T_1 (°F)	P_a (psig)	P_b (psig)	P_c (psig)	P_d (psig)	P_2 (psig)	T_2 (°F)
1	NR	-107	94	95	94	92	69	-59
2	↑	-264	96	93	93	91	80	-252
3		-291	94	91	90	88	74	-300
4		-295	91	88	87	84	71	-301
5		-298	88	85	83	80	68	-302
6		-298	85	81	79	75	63	-303
7		-300	81	78	76	71	59	-305
8		-300	79	75	73	69	54	-307
9		-300	77	72	68	65	49	-308
10		-300	75	70	65	62	45	-308
11		-302	73	69	64	61	43	-310
12		-303	71	67	63	59	41	-310
13		-302	70	65	61	58	39	-309
14		-303	67	63	59	56	38	-311
15		-303	67	63	59	56	37	-311
16	↓	-305	60	54	53	49	38	-311
17	NR	-306	45	39	37	35	27	-308

TEST No. 216A

Time (sec)	P_1 (psig)	T_1 (°F)	P_a (psig)	P_b (psig)	P_c (psig)	P_d (psig)	P_2 (psig)	T_2 (°F)
1	87	-86	80	76	73	70	53	-37
2	87	-251	81	80	80	77	65	-188
3	87	-288	80	80	79	77	67	-303
4	85	-296	78	77	72	73	62	-306
5	83	-299	76	74	73	70	60	-304
6	80	-299	73	71	70	66	56	-306
7	77	-302	70	68	66	62	52	-308
8	74	-302	68	66	65	60	49	-308
9	72	-303	67	64	62	58	45	-309
10	71	-303	66	62	59	55	41	-310
11	69	-304	64	61	56	52	38	-312
12	68	-304	63	59	56	52	36	-312
13	66	-304	62	58	54	51	35	-312
14	65	-305	60	57	53	49	33	-312

TEST No. 217

Time (sec)	P_1 (psig)	T_1 (°F)	P_a (psig)	P_b (psig)	P_c (psig)	P_d (psig)	P_2 (psig)	T_2 (°F)
0.7	NR	-42	64	58	60	56	46	-46
1		-92	65	58	60	57	48	-43
1.5		-179	64	59	64	60	50	-62
2		-255	71	74	73	71	61	-198
3		-293	71	69	68	65	53	-306
4		-302	69	69	68	65	56	-309
5		-303	69	67	66	63	54	-309
6		-306	67	66	63	61	51	-310
7		-306	65	64	62	59	47	-311
8		-307	64	63	60	57	46	-311
9		-307	63	61	60	56	44	-312
10		-307	63	61	60	56	42	-312
11		-308	63	60	57	53	39	-313
12		-308	62	60	55	52	37	-314
13		-309	62	59	55	52	35	-314
14		-309	62	58	54	51	34	-315
15	NR	-308	61	58	54	51	34	-315

TEST No. 217A

Time (sec)	P_1 (psig)	T_1 (°F)	P_a (psig)	P_b (psig)	P_c (psig)	P_d (psig)	P_2 (psig)	T_2 (°F)
0.7	61	-36	58	58	57	53	43	-66
1	63	-83	56	53	51	48	36	-50
1.5	64	-188	55	50	53	49	43	-60
2	68	-252	63	66	63	62	49	-209
3	68	-288	63	64	64	62	49	-301
4	68	-299	62	62	61	59	49	-310
5	67	-303	61	60	60	58	48	-310
6	65	-304	59	59	58	56	47	-311
7	64	-306	58	57	56	53	44	-312
8	62	-305	56	55	53	50	42	-312
9	60	-305	54	54	52	49	39	-313
10	60	-305	54	54	52	48	39	-313
11	59	-307	54	53	51	48	36	-315
12	59	-306	54	52	49	47	34	-315
13	59	-306	54	52	48	45	32	-316
14	58	-307	53	51	48	45	30	-317

TEST No. 218

Time (sec)	P_1 (psig)	T_1 (°F)	P_a (psig)	P_b (psig)	P_c (psig)	P_d (psig)	P_2 (psig)	T_2 (°F)
0.7	70	-33	68	70	68	65	50	-34
1	74	-80	68	63	61	57	43	-42
1.5	73	-172	67	59	57	53	44	-53
2	76	-244	71	72	72	70	60	-165
3	74	-288	69	67	67	66	53	-292
4	73	-302	68	67	66	64	54	-312
5	72	-305	66	65	64	61	52	-313
6	70	-307	65	65	62	59	49	-314
7	68	-308	63	62	60	57	47	-314
8	66	-308	61	59	58	54	44	-317
9	65	-310	60	58	57	52	43	-316
10	63	-309	59	57	55	51	39	-318
11	63	-309	58	55	52	49	36	-318
12	61	-309	57	54	50	47	34	-318
13	59	-309	56	53	49	46	32	-320
14	59	-309	55	52	49	46	31	-320
15	57	-312	54	51	47	45	29	-321

TEST No. 219

Time (sec)	P_1 (psig)	T_1 (°F)	P_a (psig)	P_b (psig)	P_c (psig)	P_d (psig)	P_2 (psig)	T_2 (°F)
0.8	49	-21	44	42	40	37	28	-45
1	48	-43	42	39	37	34	25	-36
1.5	47	-127	41	41	39	37	28	-29
2	50	-211	45	48	47	45	37	-117
3	51	-273	45	42	41	39	30	-267
4	50	-297	45	47	46	44	36	-298
5	50	-307	45	47	45	44	38	-319
6	49	-312	44	45	43	42	35	-320
7	48	-314	43	44	43	40	34	-320
8	46	-315	42	42	41	39	33	-319
9	45	-316	40	41	39	37	31	-321
10	44	-316	39	40	38	36	30	-322
11	44	-316	38	39	38	35	28	-321
12	43	-316	38	39	37	35	28	-322
13	43	-316	38	39	37	35	27	-322
14	43	-316	38	38	37	34	25	-322
15	43	-317	38	38	36	34	25	-323

TEST No. 220

Time (sec)	P_1 (psig)	T_1 (°F)	P_a (psig)	P_b (psig)	P_c (psig)	P_d (psig)	P_2 (psig)	T_2 (°F)
0.7	44	-51	41	45	43	40	29	-11
1	46	-78	41	41	37	35	24	-94
1.6	44	-170	38	39	35	33	22	-74
2	47	-232	42	46	46	45	37	-127
3	48	-285	43	42	42	40	32	-294
3.7	45	-299	40	40	59	34	23	-322
4	46	-305	41	44	43	42	36	-288
5	46	-309	42	43	42	40	34	-318
6	45	-314	40	41	40	39	32	-319
7	44	-316	39	40	40	37	31	-326
8	43	-316	38	39	37	36	30	-320
9	42	-316	37	38	37	35	28	-320
10	41	-316	37	37	36	34	28	-321
11	41	-317	36	37	35	33	27	-321
12	40	-317	35	36	35	32	26	-321
13	40	-317	35	35	34	32	25	-322
14	39	-318	35	35	34	32	23	-322
15	39	-318	35	35	33	31	23	-322

TEST No. 221

Time (sec)	P_1 (psig)	T_1 (°F)	P_a (psig)	P_b (psig)	P_c (psig)	P_d (psig)	P_2 (psig)	T_2 (°F)
0.5	33	+12	35	46	47	46	41	+18
1	42	-38	37	34	32	30	22	-57
1.6	39	-120	33	36	34	30	21	-37
2	42	-185	38	40	40	38	34	-131
2.5	41	-219	37	38	37	35	27	-212
3	40	-256	35	39	38	36	26	-167
3.5	39	-281	33	37	35	33	22	-158
4	40	-295	36	39	38	36	30	-264
5	39	-307	36	36	35	33	27	-307
6	39	-315	35	37	37	35	30	-319
7	39	-317	34	35	34	33	28	-321
8	38	-317	34	34	34	32	27	-321
9	37	-318	33	34	33	31	26	-321
10	36	-320	32	33	32	30	24	-323
11	36	-320	32	32	31	29	24	-322
12	35	-320	31	32	30	28	23	-323
13	34	-320	30	31	30	27	22	-324
14	34	-320	29	30	29	26	21	-324

TEST No. 222

Time (sec)	P_1 (psig)	T_1 (°F)	P_a (psig)	P_b (psig)	P_c (psig)	P_d (psig)	P_2 (psig)	T_2 (°F)
1	95	-101	88	88	88	83	63	- 99
2	105	-258	97	97	95	93	73	-291
3	105	-287	96	93	91	88	73	-303
4	103	-293	94	91	89	85	71	-303
5	100	-294	92	89	87	83	70	-303
6	98	-294	90	87	85	81	68	-303
7	96	-295	89	86	84	79	65	-304
8	95	-295	88	83	80	75	62	-305
9	93	-295	86	81	77	72	58	-306
10	91	-295	86	80	76	72	55	-306
11	90	-295	84	79	75	71	53	-307
12	88	-296	83	78	74	69	52	-307
13	87	-296	82	77	73	68	50	-308
14	86	-296	81	75	72	68	50	-307

TEST No. 223

Time (sec)	P_1 (psig)	T_1 (°F)	P_a (psig)	P_b (psig)	P_c (psig)	P_d (psig)	P_2 (psig)	T_2 (°F)
1	105	-146	98	96	95	90	70	-92
2	105	-270	98	97	97	94	76	-286
3	103	-293	95	92	90	86	70	-306
4	100	-297	93	89	88	83	69	-305
5	97	-298	89	85	84	80	67	-306
6	93	-299	86	83	82	76	64	-306
7	90	-300	83	80	78	73	60	-307
8	87	-300	81	76	73	68	55	-308
9	84	-300	79	73	70	65	51	-308
10	81	-300	77	71	68	64	48	-311
11	79	-302	75	70	67	62	46	-311
12	77	-303	72	68	64	61	44	-312
13	75	-303	71	65	63	59	42	-312
14	72	-304	68	64	61	57	41	-313

TEST No. 224

Time (sec)	P_1 (psig)	T_1 (°F)	P_a (psig)	P_b (psig)	P_c (psig)	P_d (psig)	P_1 (psig)	T_2 (°F)
0.6	64	-47	62	68	65	61	43	-50
1	75	-133	69	73	72	69	50	-58
1.4	74	-206	65	65	63	60	42	-70
2	81	-262	74	77	75	73	59	-263
3	81	-290	73	74	72	69	54	-306
4	80	-295	72	72	70	67	55	-306
5	78	-297	70	70	69	65	54	-306
6	77	-297	69	68	67	63	53	-306
7	75	-298	67	67	65	61	51	-306
8	73	-298	66	66	64	60	50	-306
9	71	-298	65	64	63	58	48	-307
10	71	-300	65	63	60	56	45	-308
11	70	-300	64	62	58	54	43	-309
12	69	-300	64	62	58	54	42	-309
13	69	-300	63	62	58	54	40	-309
14	69	-300	64	61	58	54	39	-310

TEST No. 225

Time (sec)	P_1 (psig)	T_1 (°F)	P_a (psig)	P_b (psig)	P_c (psig)	P_d (psig)	P_1 (psig)	T_2 (°F)
0.7	63	-80	59	74	62	58	38	-87
1	67	-138	62	63	62	84	43	-94
1.6	64	-231	56	47	43	40	28	-97
2	66	-267	61	62	62	60	53	-213
3	65	-292	60	60	60	57	50	-307
4	64	-300	59	58	57	54	45	-310
5	62	-300	57	56	55	52	44	-310
6	61	-305	55	54	53	51	42	-310
7	59	-305	53	53	52	48	41	-310
8	57	-305	52	51	50	47	39	-310
9	55	-305	50	50	49	46	38	-311
10	53	-305	49	49	47	44	38	-311
11	53	-305	49	48	46	43	36	-311
12	51	-305	48	46	43	40	34	-311
13	50	-307	47	45	42	39	32	-312
14	49	-307	45	44	40	37	30	-312

TEST No. 226

Time (sec)	P_1 (psig)	T_1 (°F)	P_a (psig)	P_b (psig)	P_c (psig)	P_d (psig)	P_1 (psig)	T_2 (°F)
1	NR	-57	33	30	27	24	14	-70
1.5	↑	-166	32	33	30	28	17	-58
2		-234	36	37	37	35	30	-179
3		-257	36	37	36	35	24	-194
4		-300	35	38	36	35	28	-311
5		-305	35	36	35	32	24	-316
6		-309	34	36	35	33	26	-316
7		-310	33	34	33	32	26	-317
8		-312	32	33	32	30	24	-317
9		-314	31	32	31	29	23	-317
10		-314	31	32	31	29	23	-317
11		-314	31	32	31	28	24	-317
12		-314	31	31	30	28	22	-317
13	↓	-314	30	31	30	27	22	-319
14	NR	-314	30	31	30	27	22	-319

TEST No. 227

Time (sec)	P_1 (psig)	T_1 (°F)	P_a (psig)	P_b (psig)	P_c (psig)	P_d (psig)	P_1 (psig)	T_2 (°F)
1	44	-67	41	36	33	31	20	-53
1.6	42	-185	38	32	31	28	18	-46
2	45	-238	42	44	42	40	29	-118
3	44	-281	41	41	39	37	26	-271
4	43	-300	41	41	39	37	28	-303
5	42	-307	40	38	37	35	27	-317
6	41	-309	39	38	36	35	27	-317
7	40	-313	39	37	35	34	27	-317
8	39	-313	38	36	34	32	26	-317
9	39	-312	37	35	34	31	26	-317
10	38	-314	36	34	33	30	25	-318
11	37	-315	36	33	32	28	24	-318
12	37	-315	35	33	32	28	23	-318
13	36	-315	35	32	31	28	23	-318
14	35	-315	34	31	30	28	21	-318

TEST No. 228

Time (sec)	P_1 (psig)	T_1 (°F)	P_a (psig)	P_b (psig)	P_c (psig)	P_d (psig)	P_1 (psig)	T_2 (°F)
1	95	-168	77	77	70	64	14	----
1.5	99	-285	82	77	70	63	14	----
2	104	-298	89	92	84	77	18	----
2.6	103	-303	87	79	74	67	15	----
3	104	-304	91	92	85	79	19	+30
3.6	102	-305	88	80	76	70	17	+16
4	104	-305	93	94	91	85	22	+6
4.7	103	-305	92	86	81	75	20	-36
5	103	-305	93	90	87	83	23	-57
6	102	-304	92	87	84	78	24	-192
7	100	-306	86	78	75	68	24	-320
8	98	-306	82	74	69	62	24	-322
9	97	-306	80	72	68	60	24	-322
10	96	-306	78	72	67	59	19	-323
11	95	-306	78	71	66	59	19	-323
12	95	-306	78	71	66	58	18	-323
13	95	-306	78	72	67	59	19	-323
14	95	-306	78	70	66	59	20	-323
15	95	-306	77	70	65	58	19	-323

TEST No. 229

Time (sec)	P_1 (psig)	T_1 (°F)	P_a (psig)	P_b (psig)	P_c (psig)	P_d (psig)	P_1 (psig)	T_2 (°F)
1	92	-114	74	73	67	61	13	----
2	95	-285	80	77	71	65	15	----
3	97	-293	84	80	74	68	16	----
4	98	-292	89	88	84	78	20	10
5	97	-294	87	91	90	83	22	-24
6	95	-294	83	88	87	82	23	-103
7	95	-294	83	74	70	59	16	-277
8	93	-294	78	71	65	56	18	-312
9	93	-295	76	69	64	56	20	-312
10	92	-295	76	69	64	56	19	-313
11	92	-295	76	69	64	57	20	-312
12	91	-296	75	68	64	57	19	-312
13	90	-296	73	66	62	54	17	-312
14	90	-296	73	67	61	54	16	-312

TEST No. 230

Time (sec)	P_1 (psig)	T_1 (°F)	P_a (psig)	P_b (psig)	P_c (psig)	P_d (psig)	P_1 (psig)	T_2 (°F)
1	108	-161	93	89	83	78	19	----
2	109	-285	93	89	83	77	19	----
3	108	-291	93	93	87	81	20	25
4	108	-292	96	92	88	82	21	7
5	108	-292	94	85	80	75	20	-87
6	106	-293	94	90	87	78	26	-217
7	105	-293	90	83	77	65	21	-311
8	103	-293	85	79	73	65	26	-308
9	102	-293	83	75	70	62	22	-310
10	102	-293	83	76	71	63	21	-310
11	101	-293	83	76	70	62	20	-310
12	100	-293	82	75	69	61	20	-311
13	99	-293	81	74	69	61	19	-311
14	98	-293	80	73	69	61	21	-311

TEST No. 231

Time (sec)	P_1 (psig)	T_1 (°F)	P_a (psig)	P_b (psig)	P_c (psig)	P_d (psig)	P_1 (psig)	T_2 (°F)
1	42	-51	30	30	27	24	0	----
2	45	-257	37	42	37	34	3	----
3	45	-295	35	33	29	26	1	----
4	48	-299	43	45	43	41	6	----
5	47	-303	37	34	32	28	2	24
6	42	-305	34	33	29	26	1	16
7	47	-305	41	41	39	35	4	-16
8	41	-307	32	39	37	33	2	-30
9	47	-306	42	42	39	36	5	-142
10	42	-307	34	29	26	23	1	-137
11	46	-307	41	42	40	38	8	-309
12	41	-307	31	27	23	21	1	-255
13	45	-307	39	39	37	33	7	-319
14	41	-307	31	29	27	23	1	-291

TEST No. 232

Time (sec)	P_1 (psig)	T_1 (°F)	P_a (psig)	P_b (psig)	P_c (psig)	P_d (psig)	P_1 (psig)	T_2 (°F)
1	71	-124	56	54	49	44	7	----
2	73	-287	59	55	50	45	8	----
3	75	-294	65	69	65	60	13	----
4	77	-295	69	62	58	52	11	21
5	71	-297	60	62	57	52	10	3
6	76	-297	70	69	66	62	15	-69
7	72	-297	63	78	54	51	11	-106
8	72	-297	65	64	63	59	16	-293
9	70	-297	59	57	52	45	10	-262
10	70	-298	59	54	49	40	9	-316
11	69	-299	57	50	45	39	10	-317
12	69	-298	55	50	45	39	10	-316
13	69	-299	55	50	45	39	11	-317
14	69	-298	56	50	46	40	10	-316

TEST No. 233

Time (sec)	P_1 (psig)	T_1 (°F)	P_a (psig)	P_b (psig)	P_c (psig)	P_d (psig)	P_1 (psig)	T_2 (°F)
1	70	-86	57	56	50	46	7	----
2	71	-290	59	57	52	48	8	----
3	71	-298	60	57	52	48	8	----
4	73	-300	64	63	58	54	10	----
5	72	-300	63	60	58	53	10	23
6	73	-302	66	66	64	60	13	-27
7	71	-303	62	64	60	56	12	-29
8	70	-303	62	67	66	63	19	-135
9	70	-303	60	51	48	44	10	-291
10	69	-303	58	52	49	44	12	-316
11	69	-303	56	50	46	41	11	-317
12	68	-303	54	49	44	36	10	-317
13	68	-303	54	50	46	41	12	-317
14	67	-305	54	49	45	39	10	-319

TEST No. 234

Time (sec)	P_1 (psig)	T_1 (°F)	P_a (psig)	P_b (psig)	P_c (psig)	P_d (psig)	P_1 (psig)	T_2 (°F)
1	68	-99	56	59	54	49	8	----
2	68	-283	54	54	49	45	7	----
3	66	-303	54	59	54	49	8	----
4	70	-305	63	61	59	55	11	26
5	66	-307	54	50	47	43	7	10
6	69	-307	61	62	61	55	12	-35
7	65	-307	57	53	49	45	8	-78
8	67	-308	60	62	60	57	16	-206
9	63	-308	52	51	47	43	7	-223
10	64	-308	54	53	51	46	12	-299
11	65	-308	55	50	47	42	12	-327
12	62	-309	49	44	40	34	8	-324
13	64	-309	51	48	44	38	10	-323
14	62	-310	50	44	40	35	8	-325

APPENDIX H

TABULATION OF DEWAR OUTLET PRESSURES AND TEMPERATURES AND NOZZLE INLET PRESSURES AND TEMPERATURES RECORDED THREE SECONDS AFTER INITIATING LN_2 DISCHARGE

TEST No.	P_1 (psig)	P_n (psig)	T_1 (°F)	T_2 (°F)
1	87	35	-278	-290
2	82	66	NR*	NR
3	95	87	-175	-283
4	94	91	-150	-279
5	94	92	-119	-274
6	50	16	-180	-300
7	73	66	-172	-286
8	91	90	-101	-275
9	13	3	-77	-197
10	32	25	-80	-290
11	66	65	-70	-210
12	26	7	-187	-306
13	48	45	-179	-291
14	76	75	-91	-193
15	94	37	-131	-289
16	91	64	-133	-283
17	97	83	-126	-276
18	75	21	-131	-296
19	74	46	-125	-289
20	83	61	-106	-283
20A	86	72	-61	-145
21	49	8	-66	-161
22	50	22	-66	-154
23	69	55	-47	-56
24	97	23	-36	-58
25	97	51	-44	-78
26	96	70	-38	-25
27	94	22	-46	-46
28	86	15	-35	+1
29	83	35	-41	+2
30	85	54	-27	+18
31	103	102	-13	-83
32	100	94	-190	-257
33	88	83	-150	-212
34	55	45	-130	238
35	57	57	53	20
36	71	62	-121	-205
37	60	56	-197	---
38	45	22	-149	-284
39	38	25	-122	-189
40	32	14	-121	-186
41	92	87	-152	-260
42	92	85	-141	-235
43	92	90	-107	-97
44	90	86	-126	-205
45	82	76	-147	-279

*NR = Not Recorded

TEST No.	P_1 (psig)	P_n (psig)	T_1 (°F)	T_2 (°F)
46	91	85	-155	-263
47	87	81	-155	-261
48	90	82	-148	-256
49	95	93	-162	-223
50	95	91	-140	-150
51	99	95	-124	-162
52	97	97	-40	+4
53	98	97	-103	-42
54	98	96	-138	-81
55	98	95	-144	-78
56	--	--	---	--
57	98	96	-121	-19
58	100	98	-46	+21
59	101	100	-66	-63
60	100	99	-147	-38
61	NA**	NA	NA	NA
62	NA	NA	NA	NA
63	NA	NA	NA	NA
64	NA	NA	NA	NA
65	98	94	-141	-121
66	87	62	-209	-280
67	NA	NA	NA	NA
68	NA	NA	NA	NA
69	---------VOID---------			
70	107	102	-193	--
71	85	54	-279	--
72	26	30	-144	--
73	62	28	-228	--
74	93	64	-239	-239
75	70	45	-295	-247
76	No LN_2 Discharge			
77	89	60	-281	-285
78	84	55	-285	-286
79	89	62	-276	-285
80	89	87	-181	-288
81	86	86	-158	-311
82	56	61	-90	-283
83	90	90	-115	-279
84	90	93	-96	-259
85	64	59	-126	-284
86	92	92	-130	-277
87	88	89	-145	-283
88	81	81	-141	-283
89	93	93	-170	-314
90	88	85	-195	-312

**NA = Not Applicable

TEST No.	P_1 (psig)	P_n (psig)	T_1 (°F)	T_2 (°F)
91	53	46	-145	-301
92	53	45	-168	-299
93	87	83	-180	-285
94	72	69	-153	-299
95	59	52	-163	-299
96	61	59	-127	-293
97	102	101	-150	-287
98	96	99	-169	-288
99	56	48	-158	-296
100	45	32	-161	---
101	78	75	-184	---
102	63	54	-185	---
103	77	71	-213	---
104	80	51	-247	-286
105	68	54	-205	-281
106	58	46	-192	-284
107	70	57	-244	-319
108	64	52	-189	-274
109	67	53	-194	-287
110	59	44	-182	-282
111	81	64	-236	-280
112	103	94	-194	-272
113	96	94	-194	-272
114	87	80	-206	-273
115	76	70	-190	-276
116	106	104	-191	-266
117	99	92	-208	-275
118	90	86	-203	-276
119	73	57	-209	-283
120	98	89	-255	-271
121	85	76	-198	-276
122	99	89	-216	-273
123	91	80	-202	-275
124	79	71	-199	-276
125	71	63	-187	-281
126	84	75	-185	-276
127	81	70	-195	-280
128	74	66	174	-279
129	80	71	-186	-277
130	96	85	-212	-277
131	63	55	-160	-283
132	68	58	-172	-285
133	66	56	-189	-308
134	62	53	-179	-307
135	59	50	-156	-285

TEST No.	P_1 (psig)	P_n (psig)	T_1 (°F)	T_2 (°F)
136	54	46	-140	-282
137	54	51	-101	-258
138	32	26	-63	-152
139	47	41	-114	-273
140	53	44	-153	-290
141	32	24	-102	-211
142	50	42	-146	-282
143	47	40	-143	-286
144	56	48	-145	-287
145	54	46	-151	-299
146	53	46	-174	-291
147	68	65	-152	-287
148	67	64	-125	-269
149	64	62	-135	-282
150	46	40	-133	-290
151	35	22	-139	-298
152	40	28	-166	-298
153	51	37	-189	-294
154	95	94	-176	-276
155	97	96	-157	-242
156	92	88	-186	-279
157	87	81	-199	-212
158	75	63	-166	-279
159	95	87	-351	-171
160	81	76	-219	-277
161	79	72	-195	-279
162	70	64	-202	-277
163	95	87	-213	-279
164	89	81	-214	-278
165	83	77	-195	-279
166	75	69	-191	-279
167	93	85	-218	-283
168	92	85	-224	-283
169	99	93	-246	-282
170	104	105	-123	-122
171	93	95	-82	-119
172	85	86	-83	-114
173	78	77	-81	-61
174	77	77	-79	-73
175	73	74	-63	-51
176	68	67	-64	-47
177	73	73	-81	-69
178	82	85	-91	-95
179	83	85	-148	-124
180	95	96	-133	-218

TEST No.	P_1 (psig)	P_n (psig)	T_1 (°F)	T_2 (°F)
181	86	84	-122	-202
182	92	93	-77	-78
183	77	73	-74	-64
184	64	65	-59	-45
185	44	44	-57	-27
186	45	45	-65	-8
187	88	89	-59	-54
188	95	96	-161	-136
189	83	83	-144	-236
190	75	74	-122	-210
191	99	66	-283	-276
192	76	49	-270	-280
193	102	82	-283	-274
194	87	70	-260	-281
195	98	66	-284	-279
196	78	51	-292	-286
197	68	44	-249	-272
198	69	61	-183	-285
199	64	57	-198	-287
200	89	80	-224	-284
201	97	87	-212	-273
202	107	94	-252	-277
203	96	86	-226	-276
204	90	44	---	---
205	108	98	---	---
206	100	48	-292	-302
207	74	34	-288	-316
208	60	25	-286	-321
209	74	35	-292	-315
210	49	19	-284	-324
211	48	18	-336	-325
212	36	15	-287	-318
213	98	49	---	---
214	103	77	-286	-300
215	---	73	-290	-301
216	---	74	-291	-300
216A	87	67	-288	-303
217	---	53	-293	-306
217A	68	49	-288	-301
218	74	53	-288	-292
219	51	30	-273	-267
220	48	32	-285	-294
221	40	26	-256	-167
222	105	73	-287	-303
223	103	70	-293	-306
224	81	54	-290	-306
225	65	50	-292	-307

TEST No.	P_1 (psig)	P_n (psig)	T_1 (°F)	T_2 (°F)
226	---	24	-257	-194
227	44	26	-281	-271
228	104	19	-304	+30
229	97	16	-293	---
230	108	20	-291	+25
231	45	26	-295	---
232	75	13	-294	---
233	71	8	-298	---
234	66	8	-303	---
235	94	63	-304	-309
236	109	99	-306	-303
237	104	92	-306	-305
238	99	86	-311	-312
239	87	75	-321	-318
240	90	79	-321	-320
241	84	73	-309	-306
242	75	58	-311	-315
243	99	85	-309	-312
244	88	77	-314	-313
245	106	65	-312	+78
246	109	20	-313	+61
247	103	22	-321	+61
248	107	37	-301	+73
249	109	38	-302	+72
250	108	38	-307	+59
251	115	77	-303	+85
252	113	39	-299	+70
253	85	54	-309	---
254	108	95	-323	-307
255	100	87	-330	-313

APPENDIX I

REFERENCES

1. Klueg, E. P., "Liquid Nitrogen as a Powerplant Fire Extinuishant," Fire Technology, National Fire Protection Association, August 1969.

2. Klueg, E. P. and Demaree, James E., "An Investigation of In-Flight Fire Protection With a Turbofan Powerplant Installation," Federal Aviation Administration Final Report NA-69-26 (DS-68-26), April, 1969.