Report No. FAA-RD-72-83

WING LEADING EDGE FUEL TANK IMPACT TESTS

Larry W. Hackler
National Aviation Facilities Experimental Center
Atlantic City, New Jersey 08405

OCTOBER 1972

FINAL REPORT

Availability is unlimited. Document may be released to the National Technical Information Service, Springfield, Virginia 22151, for sale to the public.

Prepared for

DEPARTMENT OF TRANSPORTATION

FEDERAL AVIATION ADMINISTRATION

Systems Research & Development Service

Washington D. C., 20591

The contents of this report reflect the views of the National Aviation Facilities Experimental Center, Atlantic City, New Jersey, which is responsible for the facts and the accuracy of the data presented herein. The contents do not necessarily reflect the official views or policy of the Department of Transportation. This report does not constitute a standard, specification or regulation.

The Federal Aviation Administration is responsible for the promotion, regulation and safety of civil aviation and for the development and operation of a common system of air navigation and air traffic control facilities which provides for the safe and efficient use of airspace by both civil and military aircraft.

The National Aviation Facilities Experimental Center maintains laboratories, facilities, skills and services to support FAA research, development and implementation programs through analysis, experimentation and evaluation of aviation concepts, procedures, systems and equipment.

TECHNICAL REPORT STANDARD TITLE PAGE

1. Report No. FAA-RD-72-83	2. Government Accession No.	3. Recipient's Catalog No.
4. Title and Subtitle WING LEADING EDGE FUEL TANK IMPACT TESTS		5. Report Date October 1972
		6. Performing Organization Code
7. Author(s) Larry W. Hackler		8. Performing Organization Report No. FAA-NA-72-21
9. Performing Organization Name and Address National Aviation Facilities Experimental Center Atlantic City, New Jersey 08405		10. Work Unit No.
		11. Contract or Grant No. Project No. 503-101-05X
12. Sponsoring Agency Name and Address FEDERAL AVIATION ADMINISTRATION Systems Research and Development Service Washington D. C. 20591		13. Type of Report and Period Covered Final Report July 1970 - June 1971
		14. Sponsoring Agency Code

15. Supplementary Notes

16. Abstract

A typical jet transport wing with integral leading edge fuel tanks was subjected to impacts similar to those which could occur in the vicinity of an airport in an aborted takeoff or an abnormal landing. The problems with the test setup are discussed, also suggestions for improvement are included. The same wing was impacted with several birds to simulate bird strikes.

17. Key Words Obstacle Impact Leading Edge Fuel Tanks Bird Strikes Fuel Containment	18. Distribution Statement Availability is unlimited. Document may be released to the National Technical Information Service, Springfield, Virginia 22151, for sale to the public.

19. Security Classif. (of this report) Unclassified	20. Security Classif. (of this page) Unclassified	21. No. of Pages 55	22. Price $3.00 PC .95 MF

Form DOT F 1700.7 (8-69)

TABLE OF CONTENTS

	Page
INTRODUCTION	1
Purpose	1
Background	1
DISCUSSION	1
Test Criteria - Obstacle Impact	1
Test Criteria - Bird Impact	1
Test Obstacles	2
Test Arrangement	3
Comments on Obstacle Impact Test Arrangement	4
Test Methods/Procedures - Obstacle Impacts	5
Test Methods/Procedures - Bird Impacts	5
SUMMARY OF RESULTS	7
Obstacle Impact	7
Bird Impact	7
CONCLUSIONS	8
APPENDIX Description of Equipment	

LIST OF ILLUSTRATIONS

Figure		Page
1	Log Failure - Test 2	12
2	Log Failure - Test 4	13
3	Angle of Impact - Angle Iron Tests	14
4	Test Obstacle During Acceleration toward Wing	15
5	Angle of Impact Vs. Percent Error of Predicted Speed	16
6	Damage to Wing - Test 1, 78.6 MI/H - Log	17
7	Damage to Wing - Test 2, 93.0 MI/H - Log	18
8	Damage to Wing - Test 3, 99.5 MI/H - Pipe	19
9	Damage to Wing - Test 3, 99.5 MI/H - Pipe	20
10	Damage to Wing - Test 4, 92.9 MI/H - Log	21
11	Damage to Wing - Test 5, 73.7 MI/H - Pipe	22
12	Damage to Wing - Test 6, 75.7 MI/H - Pipe	23
13	Damage to Wing - Test 7, 73.7 MI/H - Angle Iron	24
14	Damage to Wing - Test 8, 92.9 MI/H - Angle Iron	25
15	Damage to Wing - Test 9, 75.7 MI/H - Angle Iron	26
16	Damage to Wing - Test 7, 8, 9 - Angle Iron	27
17	Damage to Wing - Test 10, 314 MI/H - Chicken	28
18	Damage to Wing - Test 11, 341 MI/H - Chicken	29
19	Damage to Wing - Test 11, 341 MI/H - Chicken	30
20	Damage to Wing - Test 12, 340 MI/H - Duck	31

LIST OF TABLES

Table		Page
1	Test Results - Wings Without Leading Edge Fuel Tanks	9
2	Test Results - Wing With Leading Edge Fuel Tanks	10

INTRODUCTION

Purpose. The purpose of this project was to evaluate the crash and impact resistance of a typical four-engine jet transport wing leading edge fuel tank extending from the fuselage to the inboard engine pods. The results will provide the Federal Aviation Administration's Flight Standards Service with a definition of a suitable test for integral wing leading edge fuel tanks including the obstacle and test conditions.

Background. Discussions between Flight Standards Service, Systems Research and Development Service, and the National Aviation Facilities Experimental Center (NAFEC), indicated some concern about the hazards of fuel being carried in the leading edges of wings. This resulted in some preliminary tests being conducted utilizing the leading edges of a four-engine piston transport aircraft of the early 1950 era and a four-engine jet transport aircraft similar to those currently in use. Neither of these two wings were designed for wing leading edge fuel tanks. The primary purpose of these tests was to investigate the drop-test method in simulating a crash impact of a wing leading edge. Data from these tests are contained in Table 1 (see page 9).

DISCUSSION

Test Criteria - Obstacle Impact. A representative crash impact condition was established by Systems Research and Development Service as follows:

> The wing, or other equivalently exposed aircraft structure containing fuel, shall withstand, without appreciable leakage or spillage, the impact of a 4-inch-diameter white-pine log with its major axis perpendicular to the plane of the wing. The length of the log shall be twice the vertical dimension of the fuel tank. The velocity of impact shall be one-half the stall speed of the aircraft in the takeoff condition (82 mi/h for wing used).

The test program was expanded to include obstacles, in addition to the logs, such as angle iron structures, steel light poles, etc., which might be found on an airport, to provide comparative damage information.

Test Criteria - Bird Impact. A completely separate series of three tests was conducted at the conclusion of the obstacle impacts to give an indication of the bird impact resistance of wing leading edge fuel tanks. The test criteria established for the bird impacts were; one four-pound bird impact at 262 knots (302 mi/h), one four-pound bird impact at 291 knots (335 mi/h), and one eight-pound bird impact at the maximum air gun velocity.

The test criteria for the bird-impacts was determined as follows:

> FAA Report RD-68-62 and Advisory Circular 20-49 indicted that 90 percent of all bird strikes occur below 10,000 feet, 50 percent below 2,500 feet, and 82 percent occur at indicated air speeds of 250 knots or less.

The certificated performance of the aircraft was investigated to determine maximum climb speed, descent speeds above and below 10,000 feet, and cruise speed. The results, corrected for altitude are:

Condition	Indicated Air Speed (Knots)	True Air Speed (Knots) 3,000 Feet	10,000 Feet	15,000 Feet
Maximum Climb	232	242	270	292
Descent Above 10,000 Feet	270-350	-	-	341-441
Descent Below 10,000 Feet	250*	262	291	-
Cruise	350-375	See below		

*Maximum Allowable Speed Per Regulations

Federal Aviation Regulations (FAR) 25.631 requires tail structures to withstand an eight-pound bird impact at cruise speed of the airplane. FAR 25.775 B requires the windshield to withstand a four-pound bird impact at cruise speed.

Based on the above investigation it is apparent that a four-pound bird could be encountered at 250 knots indicated air speed at 3,000 feet and 10,000 feet. Therefore, the test criteria for bird impacts included two four-pound bird impacts at speeds of 262 knots (302 mi/h) and 291 knots (335 mi/h). Because the cruise speed of 450 knots (518 mi/h) exceeds the capability of the air gun, the test criteria included one eight-pound bird impact at the maximum air gun velocity.

Test Obstacles.

A four-inch-diameter white-pine log, a schedule 40 seamless 2 1/2-inch nominal diameter mild steel pipe, and a 2 1/2 X 2 1/2 X 1/4 inch mild steel angle iron were used for the obstacle impacts. These obstacles were selected because of their similarity to structure that might be found on or in the vicinity of an airport.

The three obstacles varied in their acceptability for testing. The logs were unacceptable because of the large number of variables that affected their strength. Some of these would be the time of year when cut, the moisture content, the different varieties of white pine available, the inconsistencies in diameters when used on an "as-cut" basis and the difficulty in obtaining comparable wood samples for each series of tests conducted. Figures 1 and 2 show two types of failures encountered which are related to the variations in the log samples used. The angle iron obstacle was acceptable from a strength viewpoint because of the ability

to consistently control its dimension and material specifications. However, the V-shaped cross section of the angle iron makes positive control at impact difficult. Referring to Figure 3, the angle of impact Ø, may vary causing inconsistent test results. The most acceptable test obstacle was the pipe which, because of its cylindrical shape and conformance to a material specification, would be expected to produce quite consistent test results. The pipe used in this test program caused severe damage at approximately 100 mi/h. If this were considered too severe, the wall thickness of the pipe could always be decreased while keeping the outside diameter the same, thus reducing the severity of the test. The wall thickness of the pipe used was 0.203 inch, but tubing with the same outside diameter is available in wall thicknesses ranging from 0.049 to 0.750 inch. Also the pipe can be procured in a variety of diameters. However, for the same dimensions and material specifications, the variations in strength would be minimal for equal lengths of pipe, thereby imparting the same impact load for the same impact speed.

Bird impacts were conducted using chickens for the four-pound impacts and a duck for the eight-pound impact. The utilization of freshly killed bird carcasses is a standard practice for bird-impact tests of aircraft structure.

Test Arrangement.

The obstacle impact tests were conducted at the NAFEC Drop Test Facility using bungee cord to accelerate the obstacles to the range of speeds desired. The wing was placed in a vertical position without fluid in the tanks. The wing that was available for the testing was not capable of containing fluid in the leading edge tanks without extensive repairs and modifications. Also, time-consuming repairs to the wing would have been necessary after impacts which fractured the wing.

The procedure used is a relatively inexpensive method to test the wings dry (without fluid). If necessary, subsequent tests can be conducted to correlate the damage using a dry wing as compared with damage using a wet wing. The dry method does not consider the possibility of a bulkhead or tank seam failure in an impact, but if the leading edge does not fail, the fuel would not be likely to escape in the form of a spray or mist.

The equipment necessary for conducting the obstacle impact test is minimal and with some ingenuity relative to other possible methods, the test setup could be inexpensive. The equipment is as follows:

- Equipment to raise the obstacle approximately 30 feet and support a load of approximately 3,000 pounds. This project used the NAFEC Drop Test Facility.

- Equipment to control the path of the obstacle before and during impact. This project used one-quarter-inch-steel cable.

- Equipment to store and release energy in sufficiently short time to accelerate the obstacle to the speeds desired. This project used a three-quarter-inch-elastic cord (bungee).

- Equipment to measure the impact speed of the obstacle. This project used high-speed motion pictures.

- Equipment and method to measure a major input variable affecting the impact speed. This project used total load on obstacle, but could have used a height measurement of obstacle.

- Equipment to release the obstacle and allow it to impact.

See Appendix for a more detailed description of the equipment used.

Comments on Obstacle Impact Test Arrangement.

A relation of load (total downward force on obstacle at release) versus impact speed with the mass of the obstacle held constant was used to predict the impact speeds. This method of prediction was adversely affected by the tendency of the obstacle, as it accelerated toward the wing, to become other than horizontal causing the end fittings to bind with the guide cables which resulted in slower than predicted impact speeds. Table 2 (see page 10) shows the predicted impact speed and the actual impact speed. Figure 4 shows the obstacle in a position other than horizontal.

Figure 5 was plotted using the high-speed film to determine the angle of the obstacle to the horizon (β) and using the percentage error between the predicted and actual impact speeds. The two tests which are not consistent with the others are Test 4 and Test 9. A likely explanation for Test 4 is that during the obstacle acceleration toward the wing one of the guide cables broke, there was no obvious explanation for Test 9 being inconsistent.

Figure 5 shows a possible correlation between the Angle β and the amount of error between predicted and actual impact speeds. This correlation indicates that the problem of speed control could be reduced if not overcome completely by reduction of the physical contact between the obstacle and the equipment to control the path of the obstacle before and during impact. Future testing of this type will be difficult unless this problem is resolved, because the test cannot be conducted with any reasonable expectation of what the impact speed will be.

The bungee provides a good method for accelerating the obstacles into the wing. It was very consistent in the static loads it produced when stretched. The test setup using bungee as described in this report is capable of producing impact speeds of at least 100 mi/h with a

40-pound obstacle. This speed could be increased, but by how much was not determined.

Test Methods/Procedures - Obstacle Impacts. Calibration tests for the obstacle impacts were conducted at the beginning of the testing program and from these test a least squares fit of load versus speed in the linear form was found

$$V=C_1 F + C_2$$

where:

V = impact velocity (mi/h)
F = total load, including force from bungee and weight of obstacle and obstacle holder (pounds).
C_1 and C_2 = constants

This equation was then graphed and used as a guide to determine the load needed to produce a certain impact speed. After this initial work, the procedure for each test was as follows:

- The obstacle was attached to the guide cables and the wing was placed in a vertical position, with a sweepback angle of 33°, so that the obstacle would impact midway between ribs with the obstacle's major axis perpendicular to the plane of the wing.

- The load cell and large dial indicator were calibrated and put into place.

- The high-speed cameras were placed to give the desired coverage.

- The obstacle was raised and the load reading was allowed to settle until it was stable at the desired load, which took approximately 2 minutes.

- The obstacle was impacted.

- Still photos were taken of the damage.

- The film was analyzed to obtain the impact speed.

Test Methods/Procedures - Bird Impacts. Calibration tests for the bird impacts were conducted at the beginning of the testing program and an approximate fit of pressure versus impact speed was obtained by a straight line close to the data points. This graph was then used to determine the pressures to obtain the desired speeds. After this initial work, the procedure for each test was as follows:

- The wing was positioned with a sweepback angle of 33° so that the bird would impact the desired area.

- The high-speed cameras were placed to give the desired coverage.

- The bird was asphyxiated, placed in the styrofoam plug and then placed in the air gun.
- The air gun pressure was raised to the desired level and the air gun was fired.
- Photographs were taken of the damage.
- The film was analyzed to obtain the impact speed.

SUMMARY OF RESULTS

Obstacle Impact.

The results of the log- and pipe-impact test indicate that failure of the leading edge fuel tank of the four-engine jet transport wing tested would occur at speeds of approximately 93 mi/h and above with the log, and approximately 74 mi/h and above with the pipe. All three angle iron impacts mi/h caused failure; therefore, the speed at which failure would occur can only be reported as less than 74 mi/h. Table 1 (page 9) shows the results of previous testing of wings which were not designed to carry fuel in the leading edge. Table 2 shows the results of the testing of the wing designed to carry fuel in the leading edge, the obstacle impact data is shown in Tests 1 through 9. Figures 6 through 16 are photographs of the damage done by each impact.

An interesting observation made during review of the films of the angle iron impact was that sparks were detected in the immediate area of the impact with the diameter of the flash varying from approximately one to three inches.

Bird Impact. The bird impacts indicate that a bird strike at a speed greater than or equal to 314 mi/h with a bird weighing four or more pounds would cause failure of the leading edge fuel tank. Table 2 (page 10) shows the results of the bird impacts in Tests 10 through 12, and Figures 17 through 20 are photographs of the damage done by these impacts.

CONCLUSIONS

Based on the results obtained from the tests conducted, it is concluded that:

1. The test setup used is a simple and acceptable method of evaluating the strength of leading edge fuel tanks without fuel in the tanks. A possible test criteria to be used with empty tanks might be as follows:

   - The wing shall withstand, without cracking or rupture (rivet shearing allowed), the impact of a four-inch-diameter "pipe" with its major axis perpendicular to the plane of the wing. The length of the "pipe" shall be twice the vertical dimension of the fuel tank. The impact shall occur midway between the ribs. The velocity of impact shall be at least one-half the stall speed of the aircraft in the takeoff condition at the maximum takeoff weight.

   - The "pipe" will have to be designated more specifically by what the material and wall thickness will be.

2. The pipe, with possible changes in diameter and wall thickness, is the best test obstacle of the three tested.

3. Further testing would be necessary to evaluate the effects of fluid in the leading edge tanks.

4. The low number of tests makes any conclusions about the repeatability of the test results impossible, except that the angle iron impacts gave an indication of being unrepeatable.

5. A four-pound bird will cause fracture of the leading edge fuel tanks of the typical jet transport aircraft wing tested at impact speeds of approximately 314 mi/h and above.

TABLE 1. TEST RESULTS - WINGS WITHOUT LEADING EDGE FUEL TANKS

Actual Speed (mi/h)	Test Obstacle	Comment
	Four-Engine Piston Transport	
42	Log	3-inch penetration
47	Log	3 1/2-inch penetration
51	Log	3 1/2-inch penetration
60	Log	3 1/2-inch penetration
55	Log	4-inch penetration
51	Log	4-inch penetration
61	Log	4-inch penetration
73	Log	5-inch penetration
	Early Four-Engine Jet Transport	
70	Log	1-inch penetration
69	Log	1-inch penetration
29	Log	Slight dent
13	Log	No damage
15	Log	No damage
49	Log	Dent; no penetration
52	Log	Dent; no penetration
14	Log	No damage
52	Log	Slight penetration
57	Log	Slight penetration
51	Log	Slight penetration
88	Pipe	1 3/4-inch penetration
76	Pipe	1 3/4-inch penetration
89	Angle Iron	Severe damage
83	Angle Iron	Severe damage

TABLE 2. TEST RESULTS - WING WITH LEADING EDGE FUEL TANKS

Project Test	Test	Predicted Impact Speed (mi/h)	Actual Impact Speed (mi/h)	Test Obstacle	Comment
LR	1		78.6	Log	No rupture
LS	2	120	93.0	Log	6-inch rupture along rivet line
LT	3	102	99.5	Pipe	Rupture 6 inches wide, 1.5 ft long on one side and 1.1 ft long on the other
LU	4	116	92.9	Log	No rupture
LV	5	78	73.7	Pipe	Several rivets sheared, no rupture
LW	6	85	75.7	Pipe	3-inch crack through rivet holes - no rupture
LX	7	92	73.7	Angle Iron	1.5-inch rupture at point of angle iron contact with wing
LY	8	109	92.9	Angle Iron	8-inch rupture along rivet line
LZ	9	75	75.7	Angle Iron	9-inch rupture along rivet line
BA	10		314	4-Pound Chicken	Leading edge was indented 2 1/2 inches in the wing's longitudinal direction, 15 inches in the lateral direction, and 10 inches in the vertical direction. A rupture 1 1/2 inches long near the outside rib. An 11-inch crack appeared in the area of previous Test 2 and a 1-foot crack in the area of Test 3.

TABLE 2. TEST RESULTS - WING WITH LEADING EDGE FUEL TANKS (continued)

Project Test	Test	Predicted Impact Speed (mi/h)	Actual Impact Speed (mi/h)	Test Obstacle	Comment
BB	11		341	4-Pound Chicken	Leading edge was indented 2 inches in the wing's longitudinal direction, 8 inches in the lateral direction and 9 inches in the vertical direction. 11 1/2-inch rupture along rivet line.
BC	12		340	6-Pound, 13-Ounce Duck (Largest Duck Available)	Leading edge was indented 2 inches in the wings longitudinal direction, 4 1/2 inches in the lateral direction and 6 inches in the vertical direction. 11-inch rupture along rivet lines.

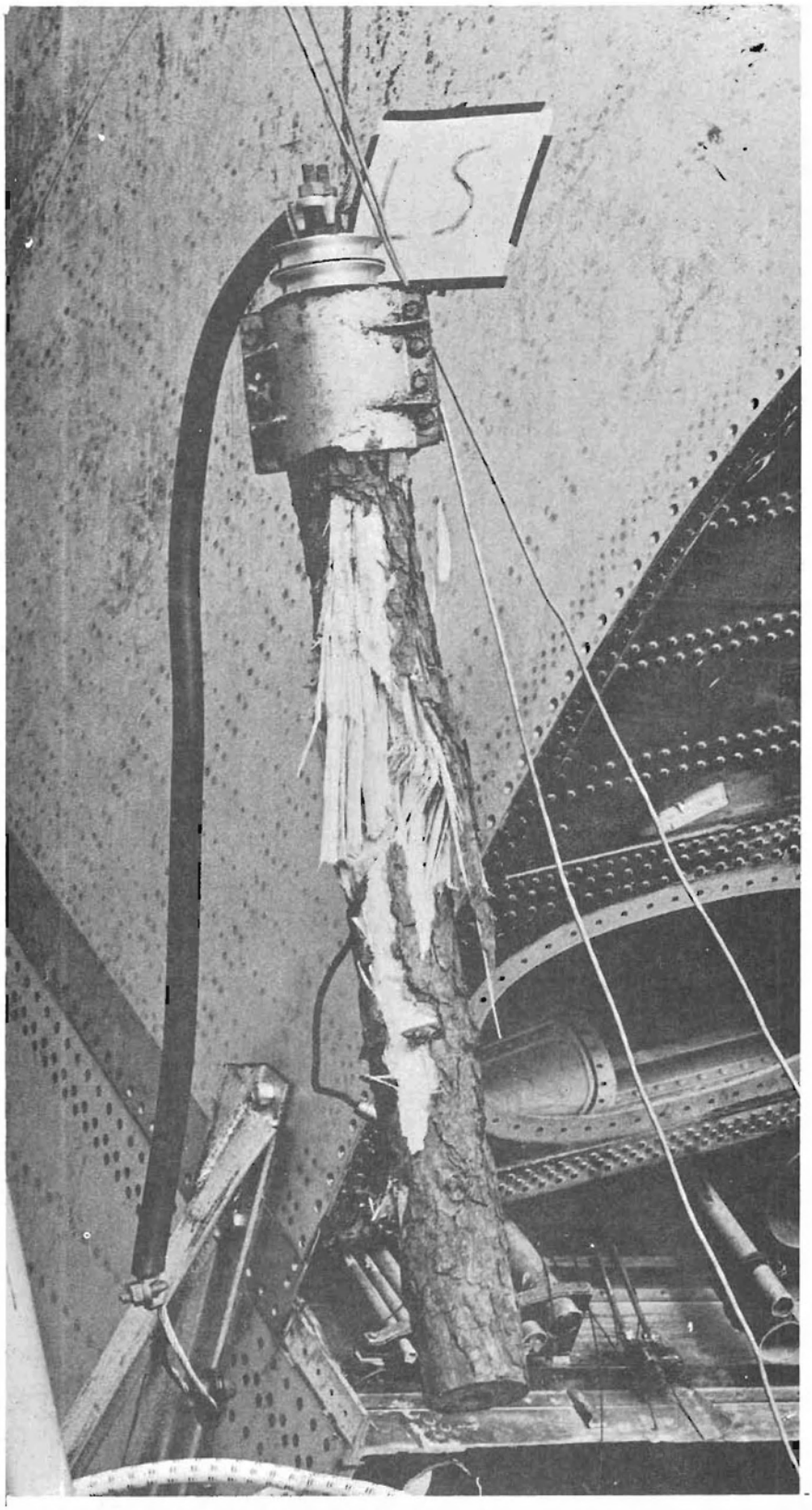

FIGURE 1. LOG FAILURE - TEST 2

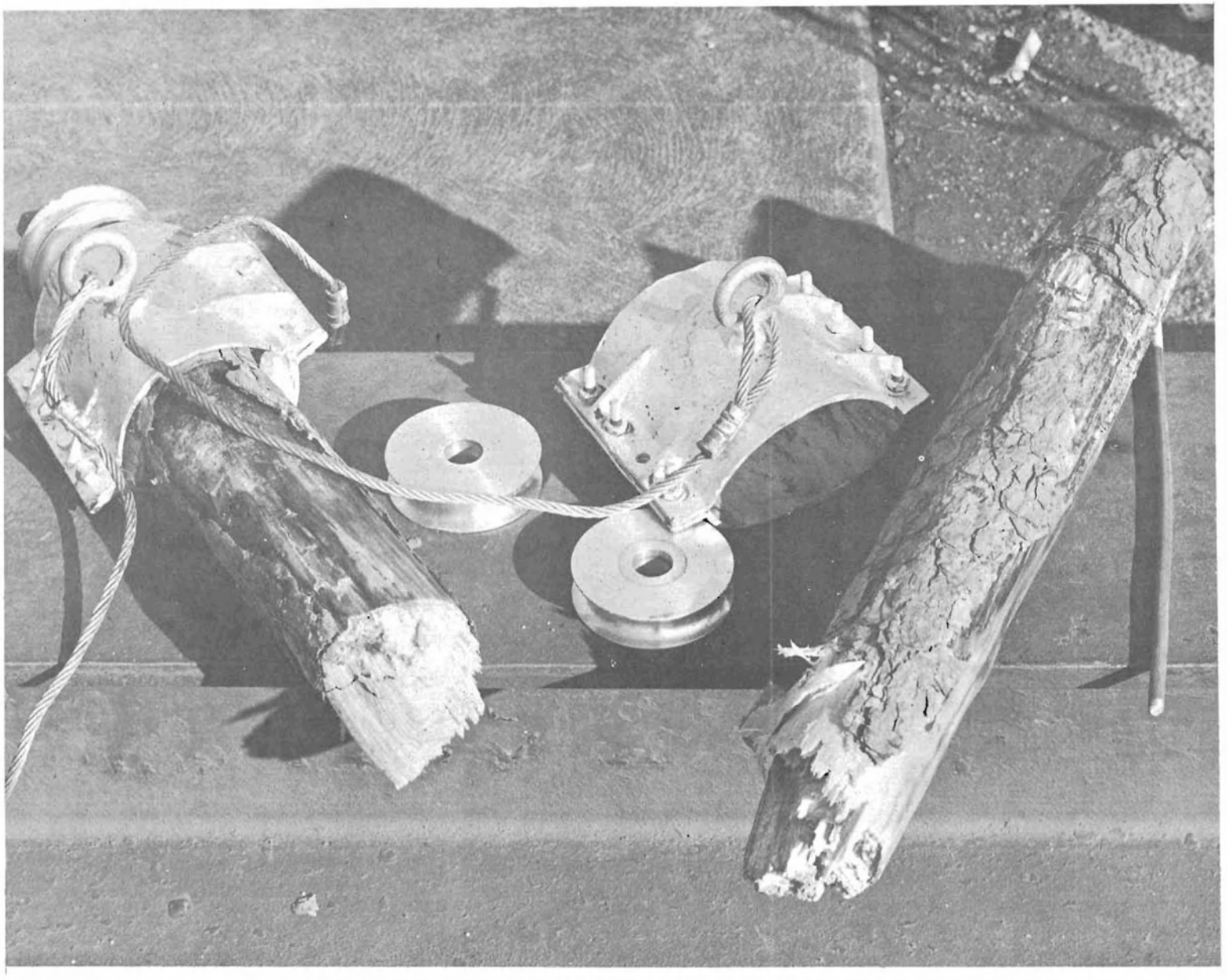

FIGURE 2. LOG FAILURE - TEST 4

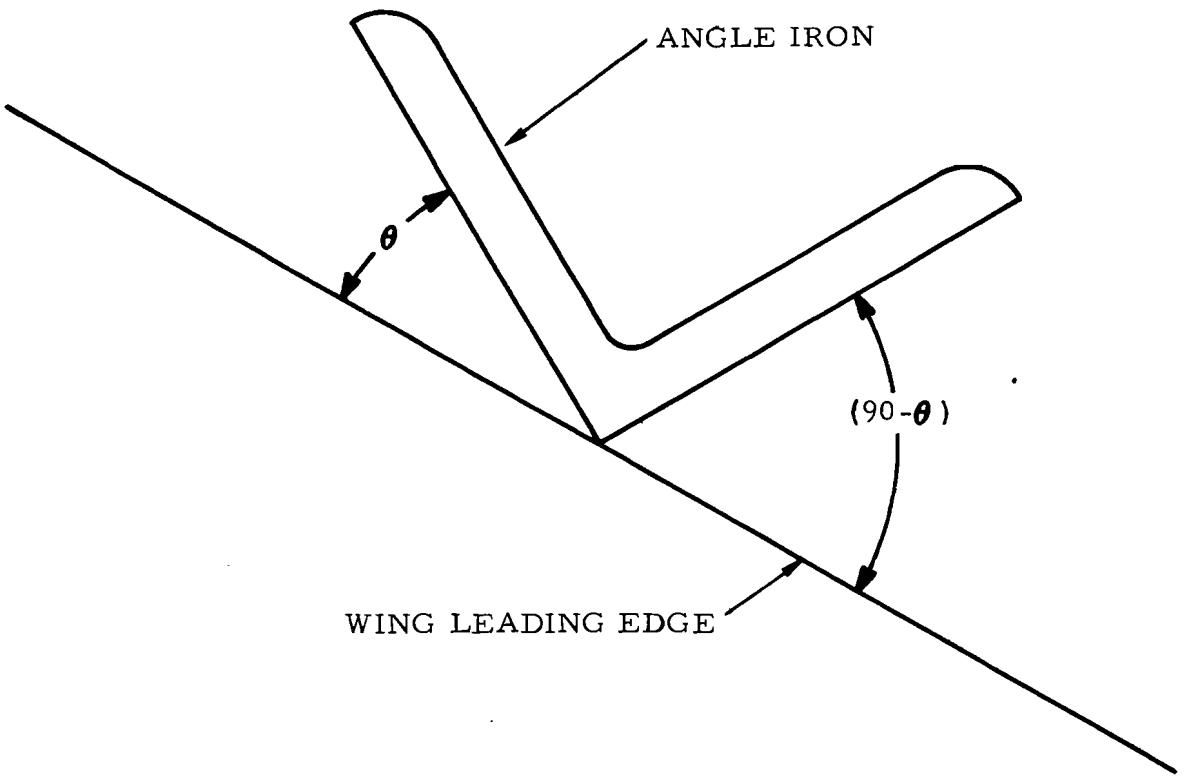

FIGURE 3. ANGLE OF IMPACT - ANGLE IRON TESTS

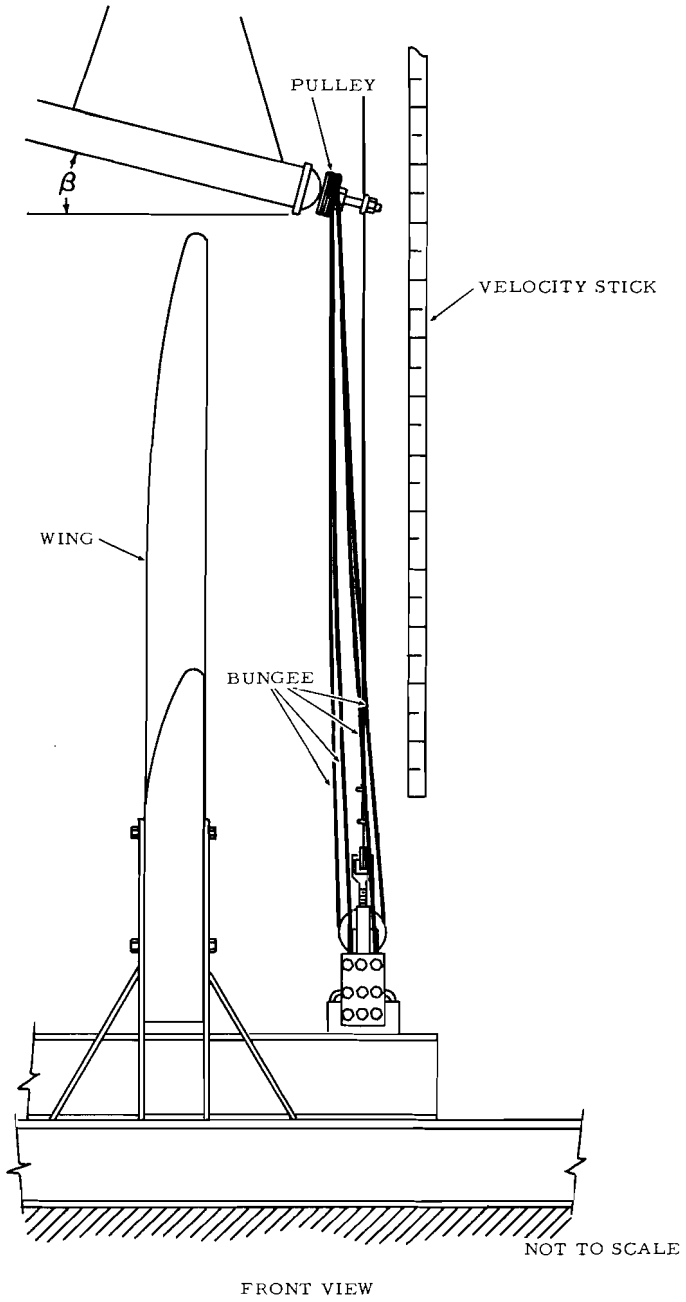

FIGURE 4. TEST OBSTACLE DURING ACCELERATION TOWARD WING

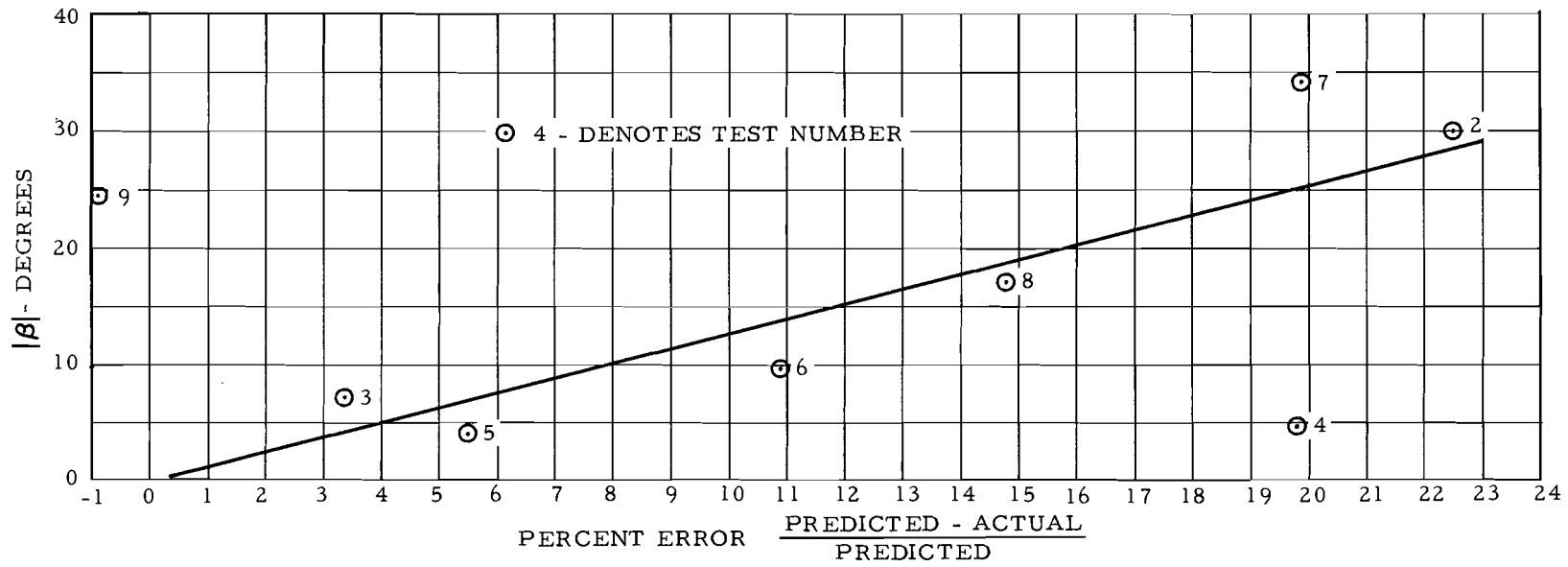

FIGURE 5. ANGLE OF IMPACT VS. PERCENT ERROR OF PREDICTED SPEED

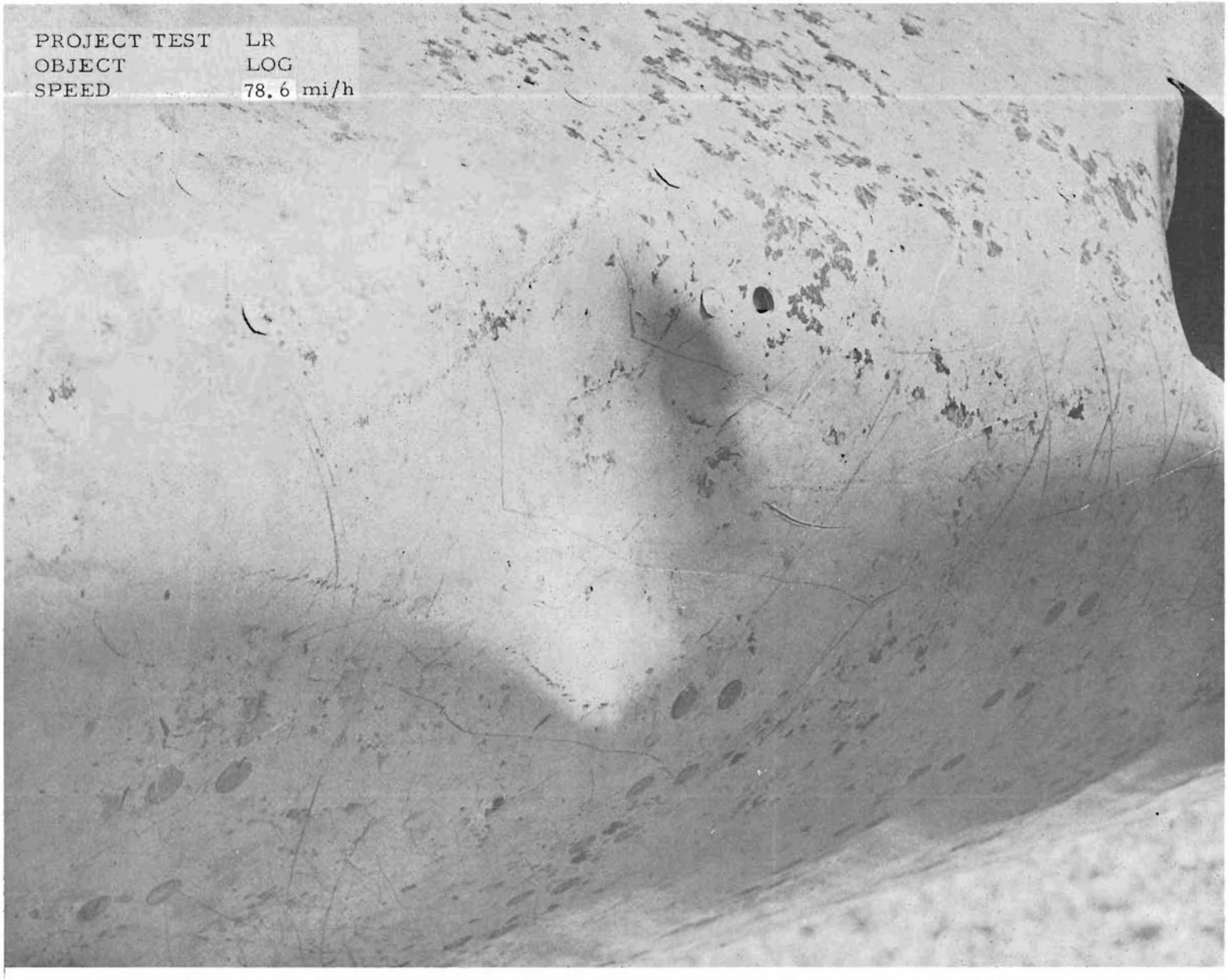

FIGURE 6. DAMAGE TO WING - TEST 1, 78.6 MI/H - LOG

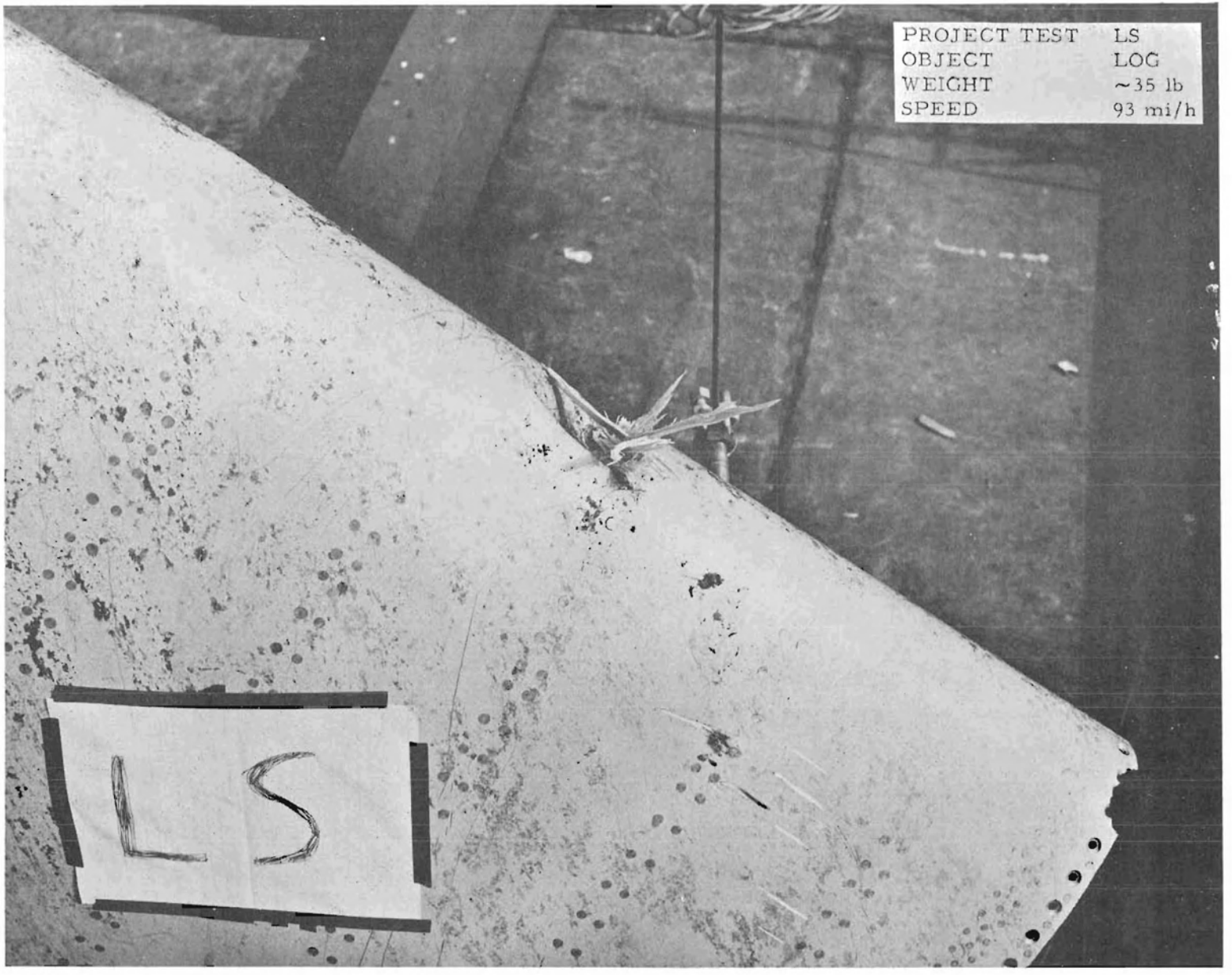

FIGURE 7. DAMAGE TO WING - TEST 2, 93.0 MI/H - LOG

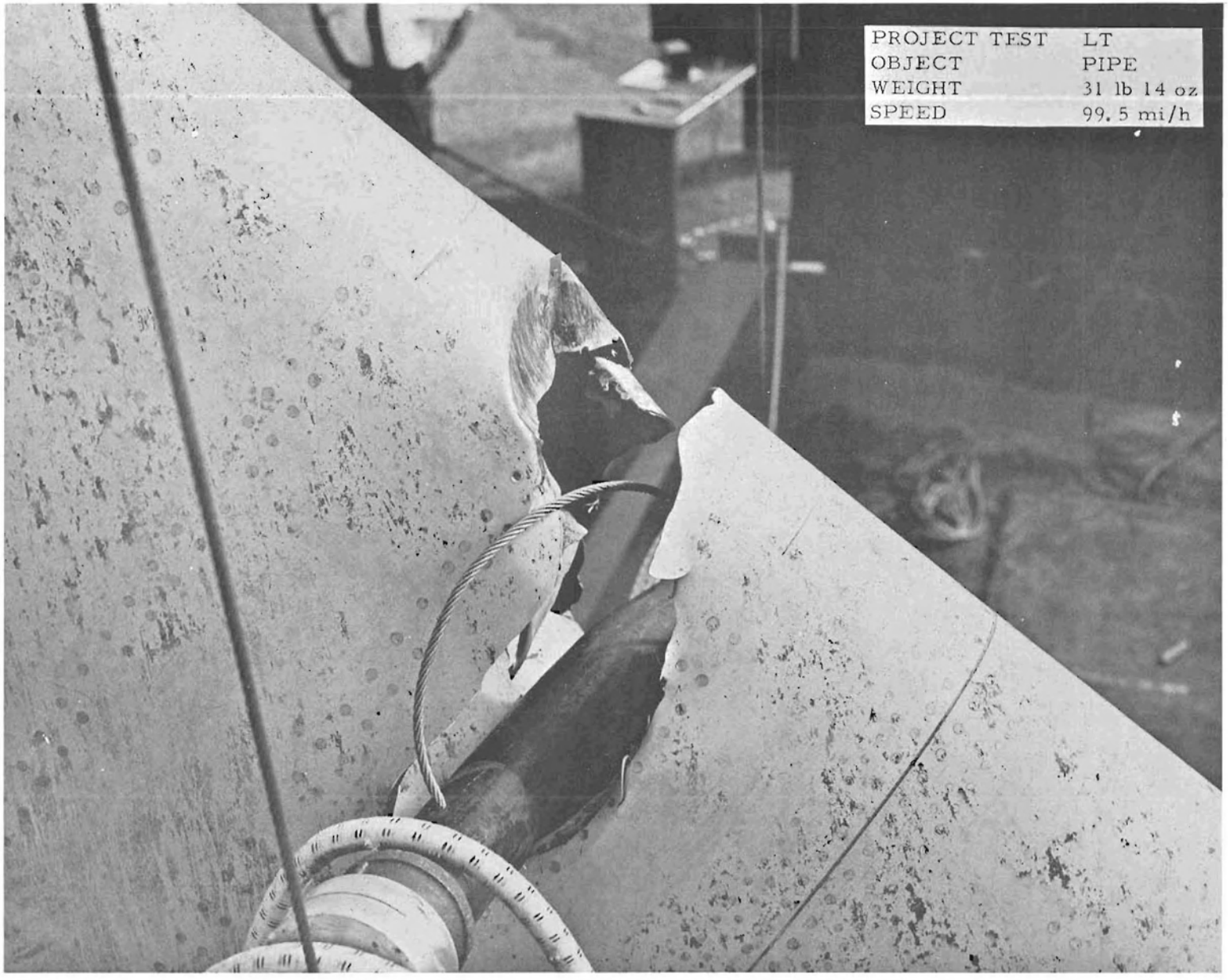

FIGURE 8. DAMAGE TO WING - TEST 3, 99.5 MI/H - PIPE

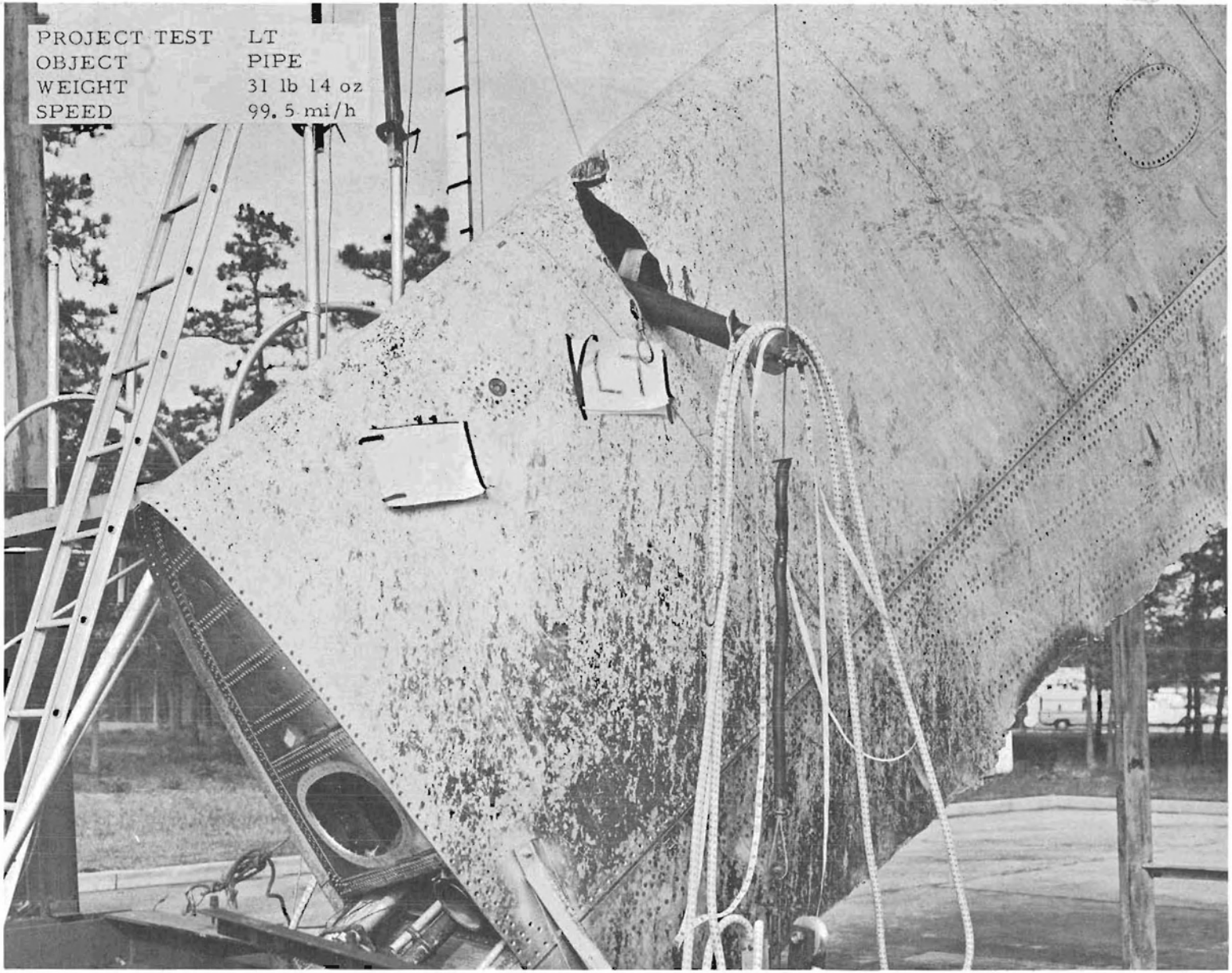

FIGURE 9. DAMAGE TO WING - TEST 3, 99.5 MI/H - PIPE

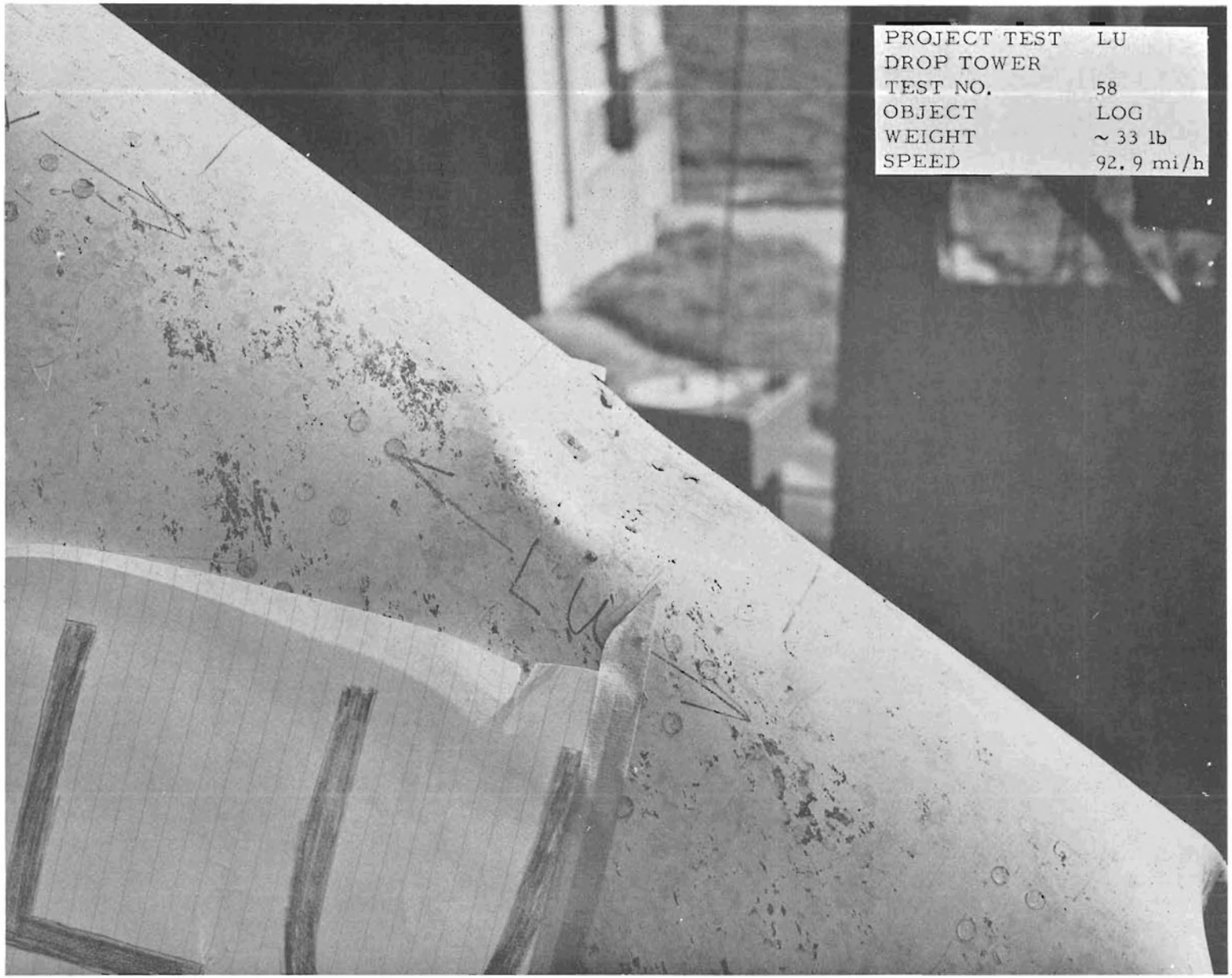

FIGURE 10. DAMAGE TO WING - TEST 4, 92.9 MI/H - LOG

FIGURE 11. DAMAGE TO WING - TEST 5, 73.7 MI/H - PIPE

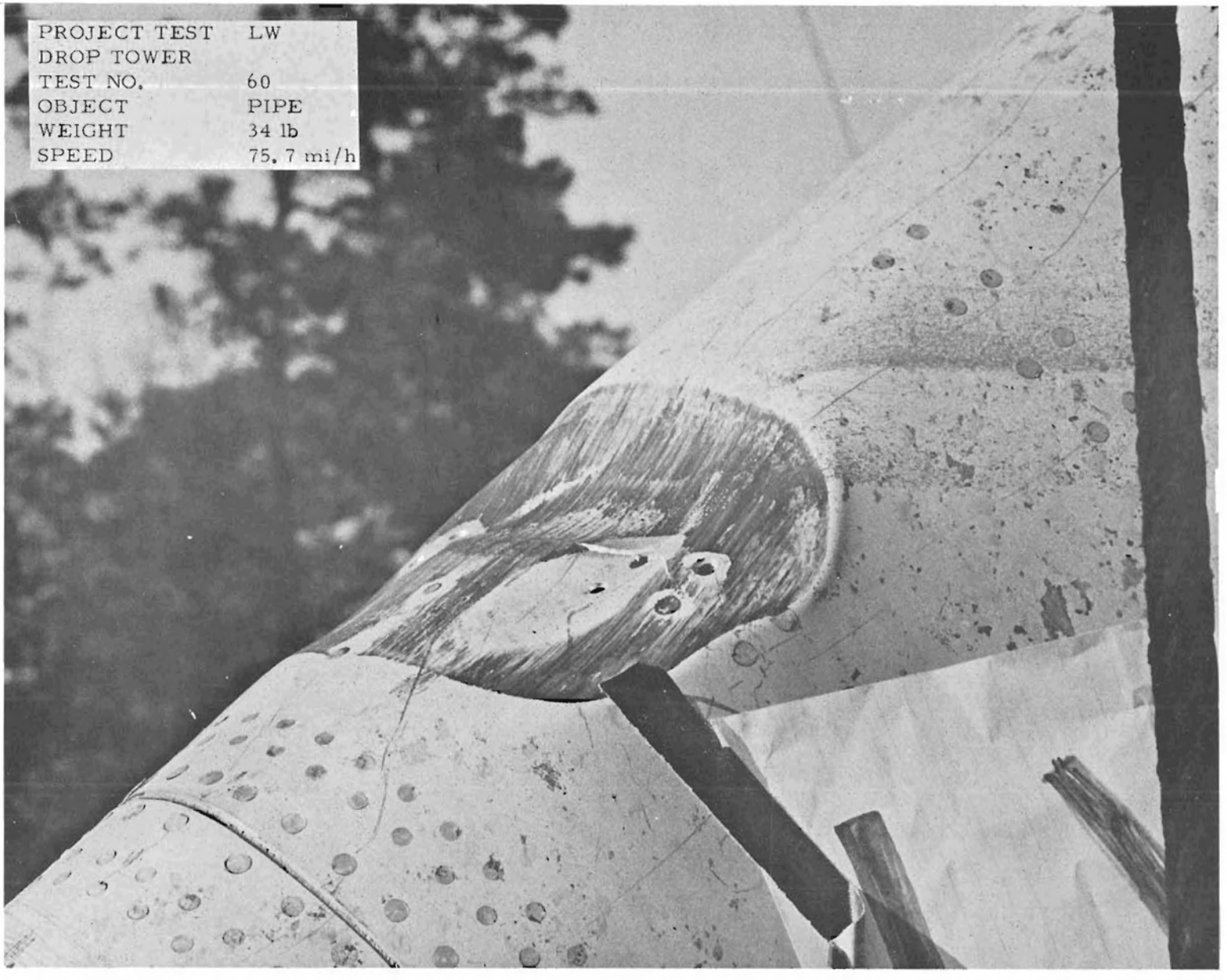

FIGURE 12. DAMAGE TO WING - TEST 6, 75.7 MI/H - PIPE

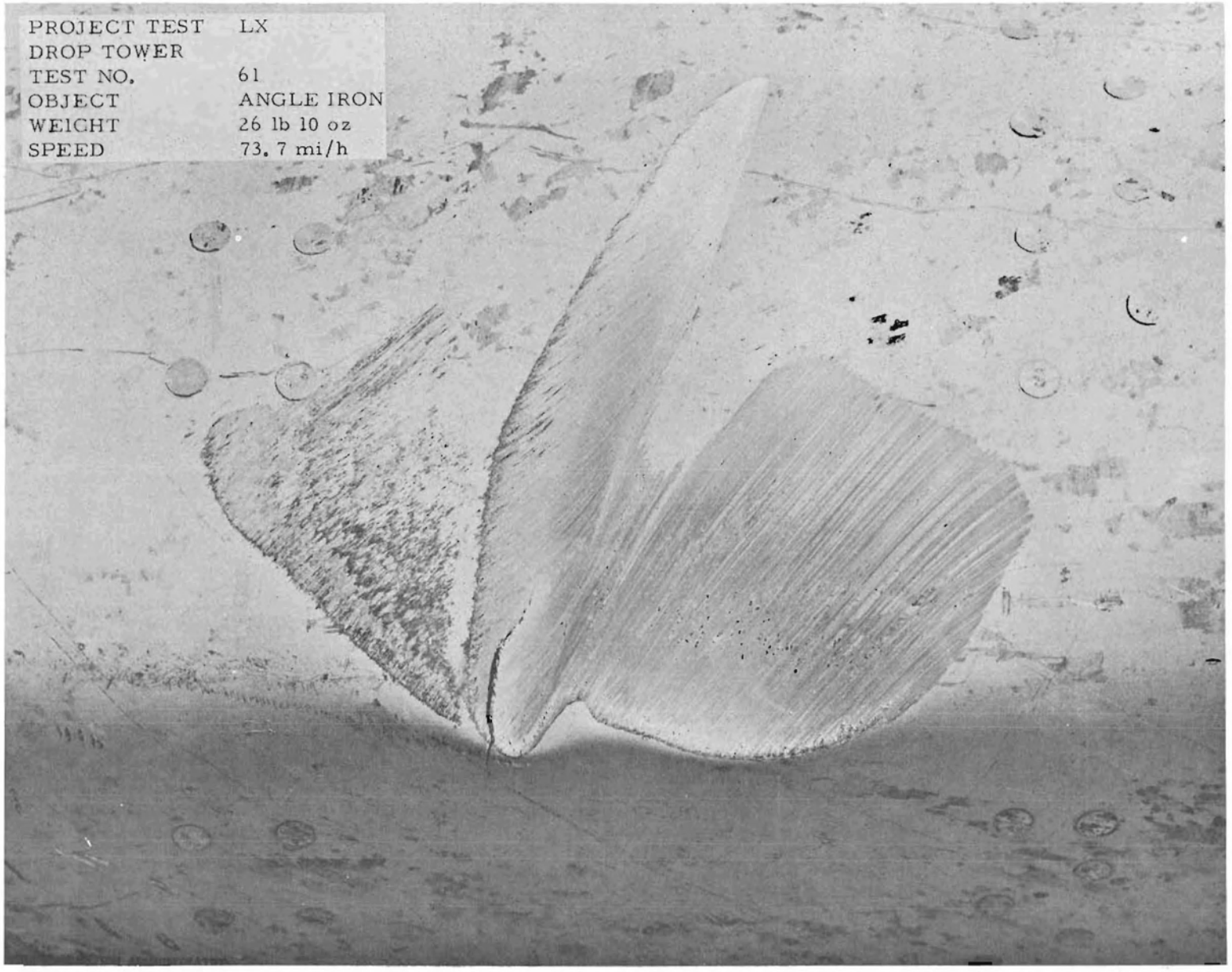

FIGURE 13. DAMAGE TO WING - TEST 7, 73.7 MI/H - ANGLE IRON

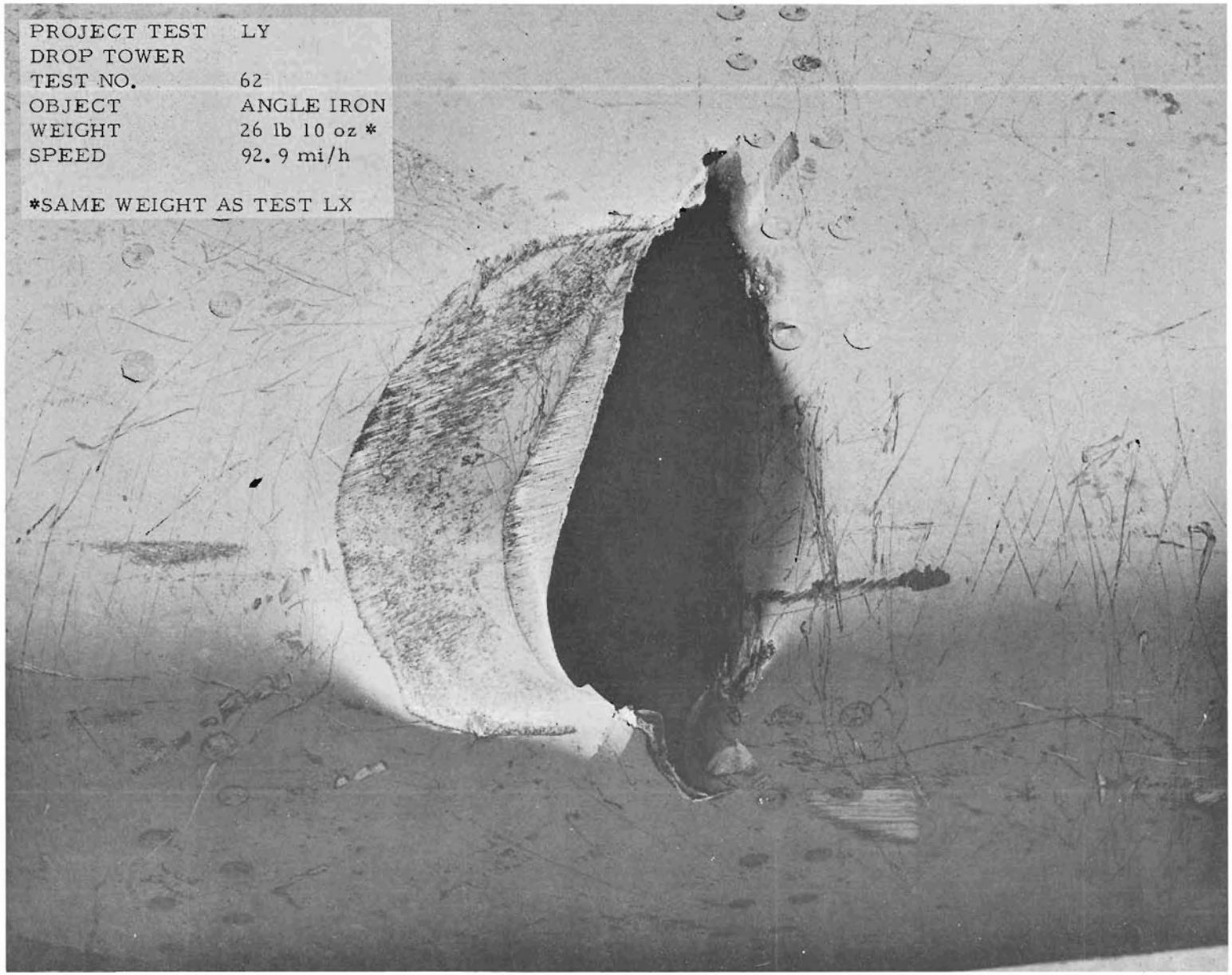

FIGURE 14. DAMAGE TO WING - TEST 8, 92.9 MI/H - ANGLE IRON

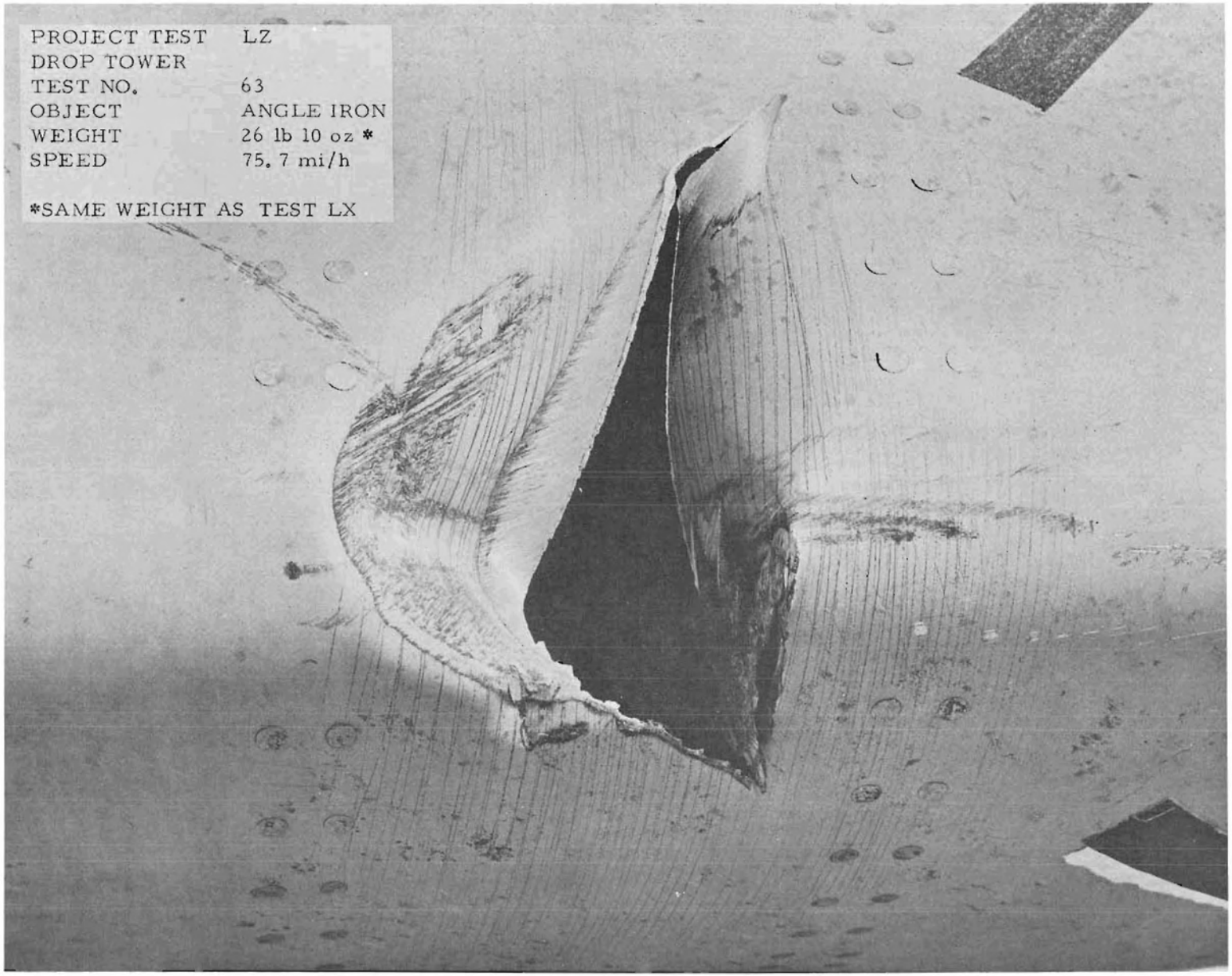

FIGURE 15. DAMAGE TO WING - TEST 9, 75.7 MI/H - ANGLE IRON

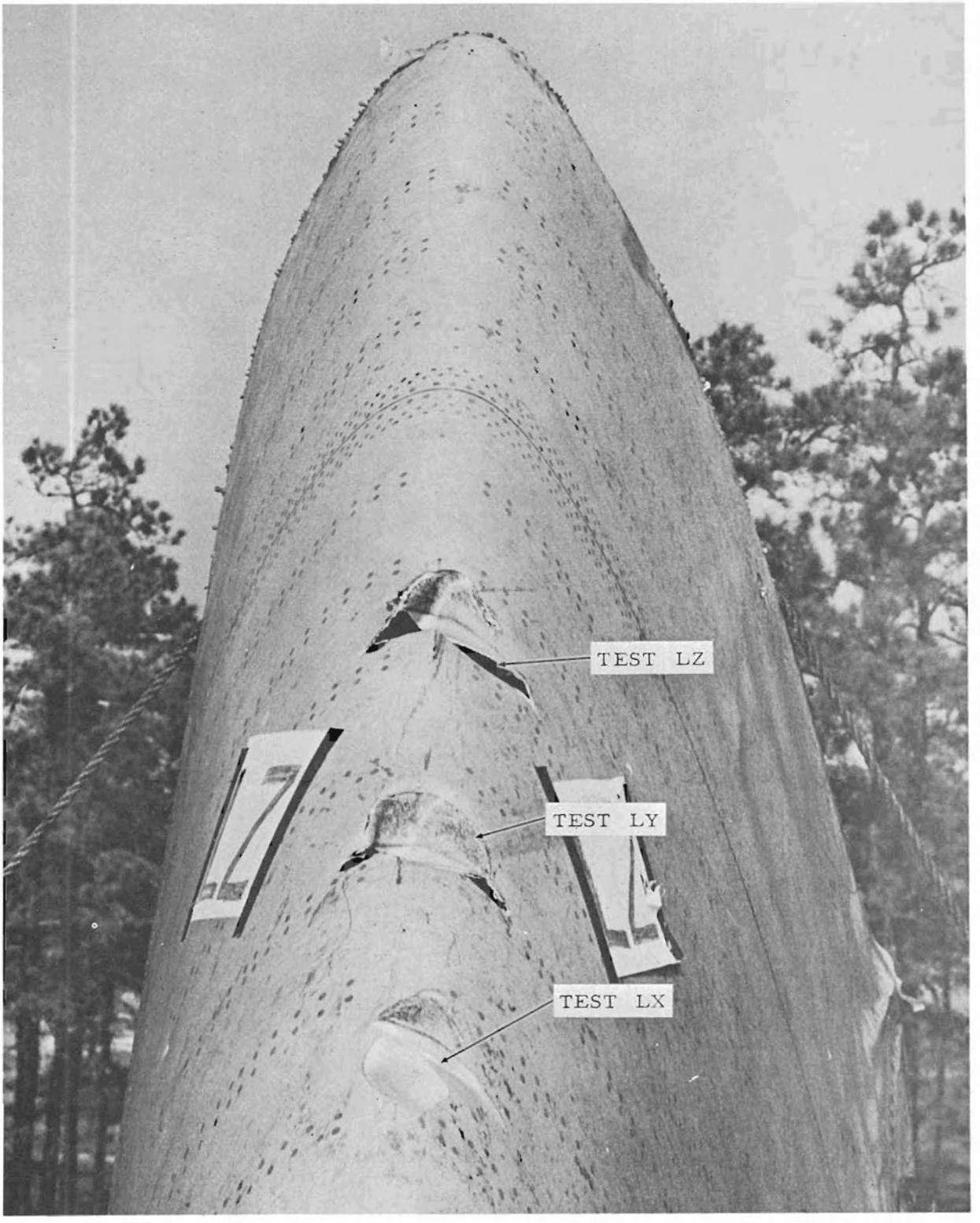

FIGURE 16. DAMAGE TO WING - TEST 7, 8, 9 - ANGLE IRON

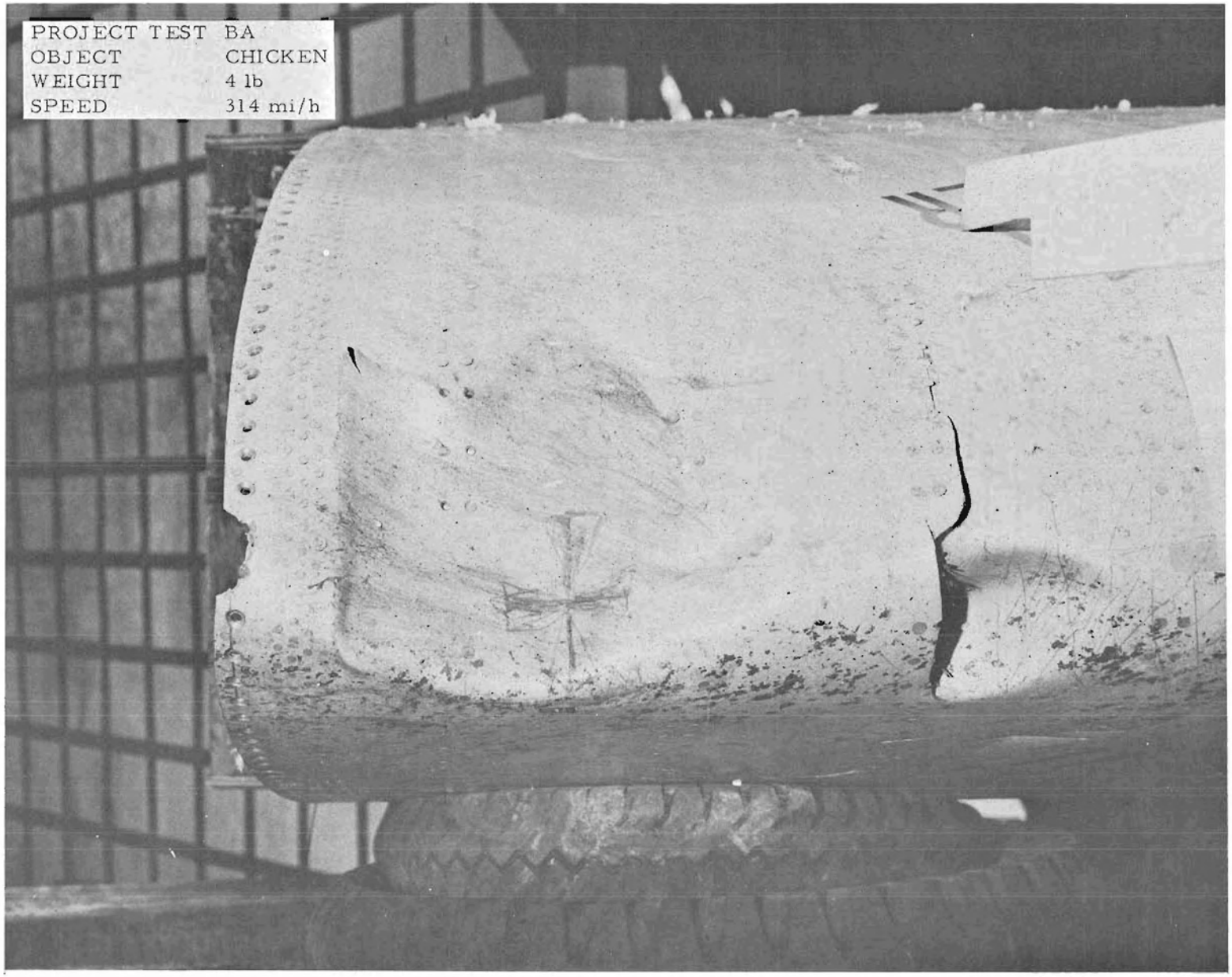

FIGURE 17. DAMAGE TO WING - TEST 10, 314 MI/H - CHICKEN

FIGURE 18. DAMAGE TO WING - TEST 11, 341 MI/H - CHICKEN

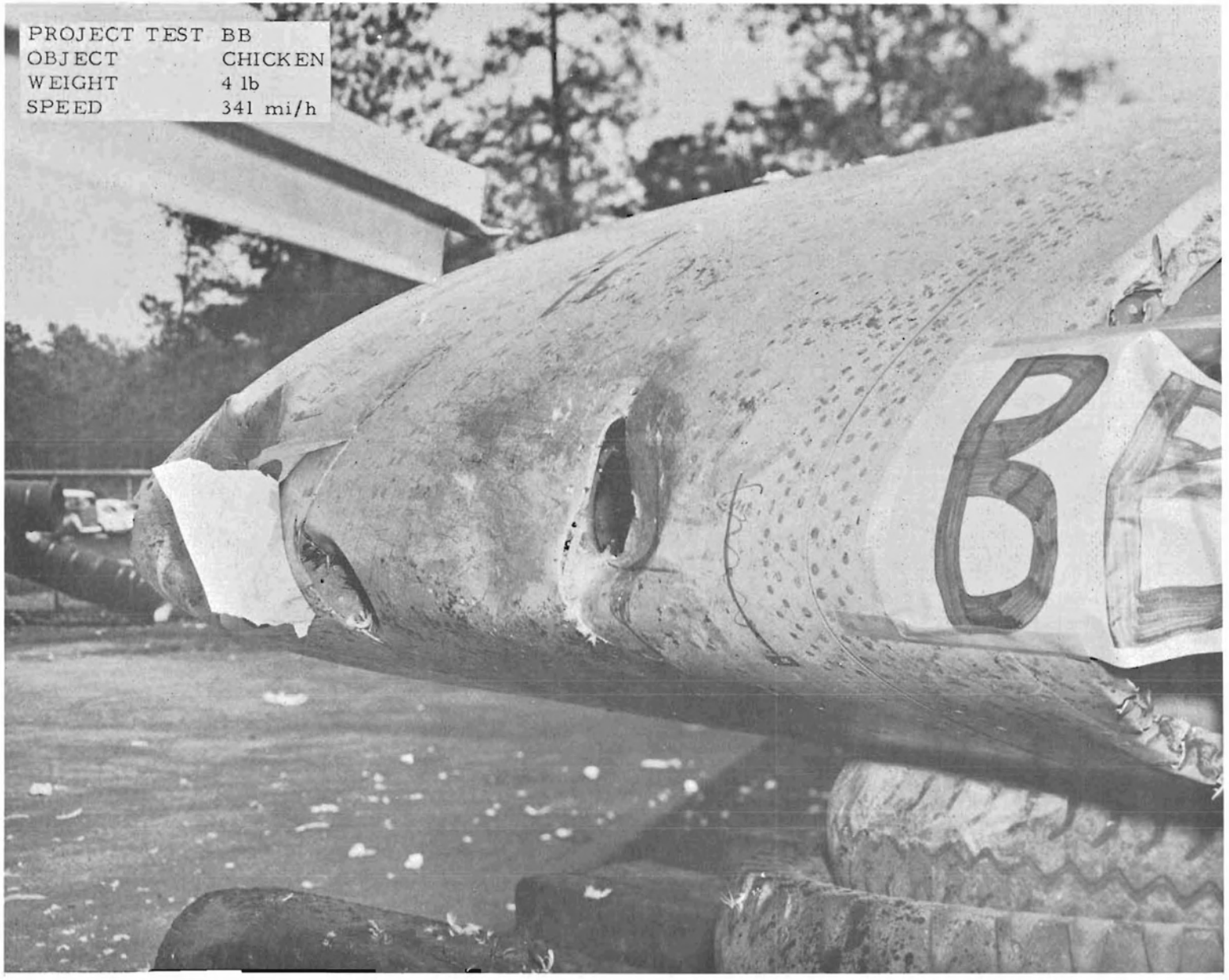

FIGURE 19. DAMAGE TO WING - TEST 11, 341 MI/H - CHICKEN

FIGURE 20. DAMAGE TO WING - TEST 12, 340 - DUCK

APPENDIX A

DESCRIPTION OF EQUIPMENT

Description of Equipment

The obstacle impacts were conducted at the National Aviation Facilities Experimental Center's Drop Test Facility, using the 50-foot tower and the associated 30,000-pound hoist to lift the impact obstacle above the wing as shown in Figure 1-1.

The impact obstacle was guided by two one-quarter-inch-steel cables fastened normally at the top of the tower and fastened to a turnbuckle at the bottom to allow for adjustment of the tension in the cable (see Figure 1-2).

The bungee used was double cover three-quarter-inch-elastic cord arranged as shown in Figures 1-2, 1-3, and 1-4. The length of bungee subject to stretching was approximately 88 feet. The bungee clamp is shown in Figure 1-5.

The quick release was solenoid operated. Any type release which could support the loads would have been acceptable.

The equipment to hold and guide the different obstacles is shown in the following figures:

Angle Iron	- Figures 1-6, 1-7, 1-8, and 1-9
Log	- Figures 1-6, 1-10, 1-11, and 1-12
Pipe	- Figures 1-6, 1-7, and 1-13

The equipment used to measure the total load on obstacle at release was a load cell, 5,000-pound capacity, 0-3 mv/volt, and a large dial indicator. A precision calibrator was used to calibrate the indicator. The load cell was checked during the testing by the calibration laboratory.

Sixteen millimeter, high-speed (Hycam) cameras were used for a speed measurement and for recording different views of the impact and test setup. The frame rate was approximately 1,500 frames per second. A time code generator was used to put 1,000 pulses per second on the edge of the film in the camera used to obtain the speed measurement. This time reference combined with a velocity stick (see Figure 1-3) graduated in one-half foot increments for a distance reference gave the impact speed. Figure 1-11, shows the general arrangement of the high-speed cameras. Cameras numbered 1, 3, and 4 are used to get a view of the impact. Camera No. 2 is mounted level with the impact area and is used to obtain the speed measurement. Camera No. 5 is used for an overall view of the test.

The electrical circuit used to control the quick release and the high-speed cameras has a time-delay circuit which allows approximately 3 seconds for the cameras to reach speed before the obstacle is dropped.

The bird-impact tests were conducted at the NAFEC Air Gun Facility. The air gun uses compressed air with pressures up to 250 psig to accelerate the bird, which is in a styrofoam cylinder, to the range of speeds desired. The overall arrangement is shown in Figure 1-15.

The wing was supported by blocking on railroad ties, with rubber tires to give a base for the wing to rest upon. See Figures 1-16 and 1-17. The wing had a sweepback angle of 33° with the impact area 10 feet from the end of the air gun barrel.

Sixteen millimeter, high-speed (Hycam) cameras were used for different views of the impact. Thirty-five millimeter high-speed cameras were used for a speed measurement. The frame rate was approximately 2,800 frames per second. A time-code generator was used to put 1,000 pulses per second on the edge of the film. This time reference combined with a velocity stick (see Figure 1-15), graduated in one-half-foot increments for a distance reference, gave the impact speed. Figure 1-18 shows the general arrangement of the high-speed cameras. Camera No. 1 was mounted level with the impact area and was used to obtain the impact speed. Cameras 2 and 3 were used to get a view of the impact.

The control circuit used to control the firing of the air gun incorporates a time-delay which allows the cameras to reach speed before the air gun is fired.

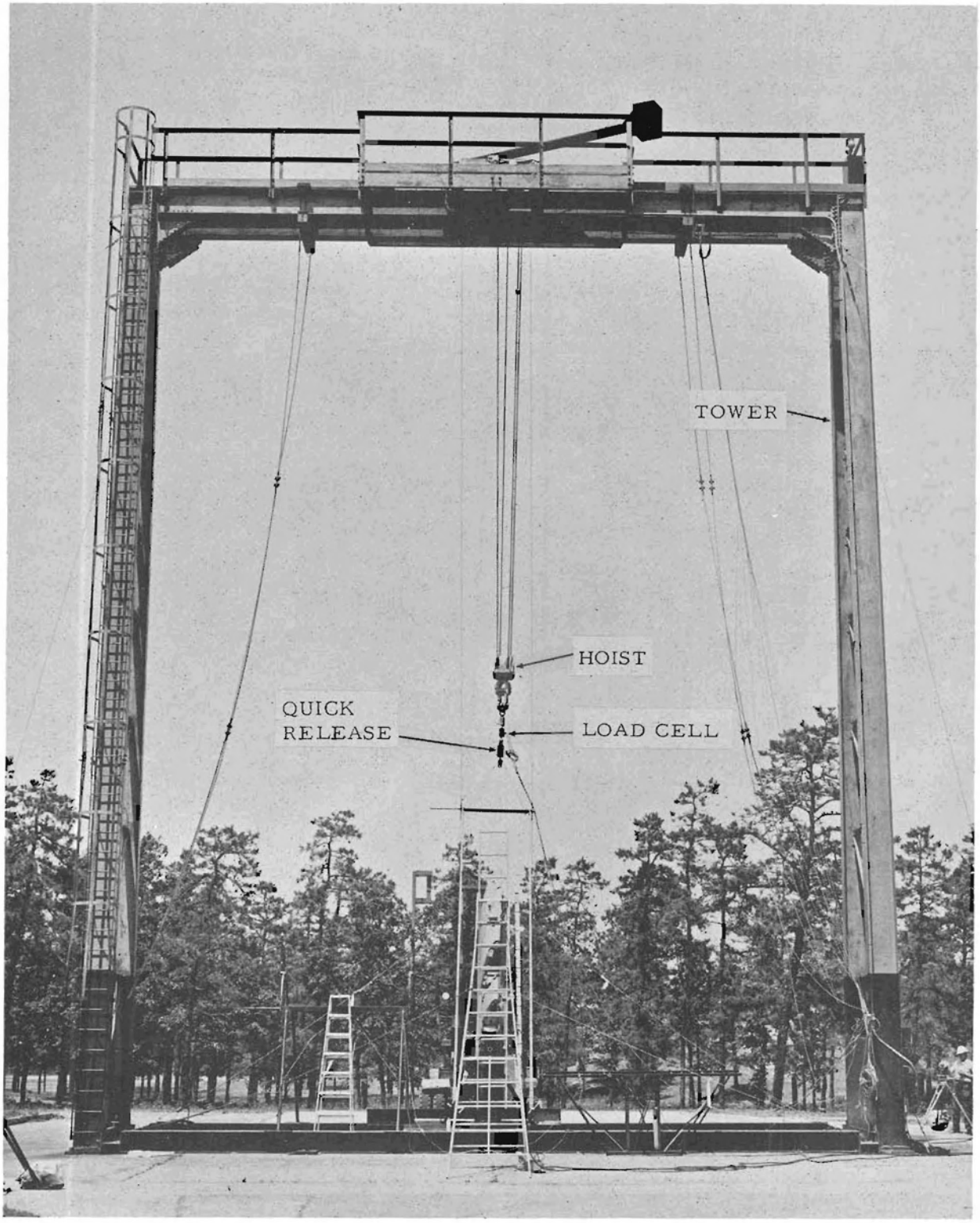

FIGURE 1-1. OVERALL VIEW OF DROP TEST FACILITY

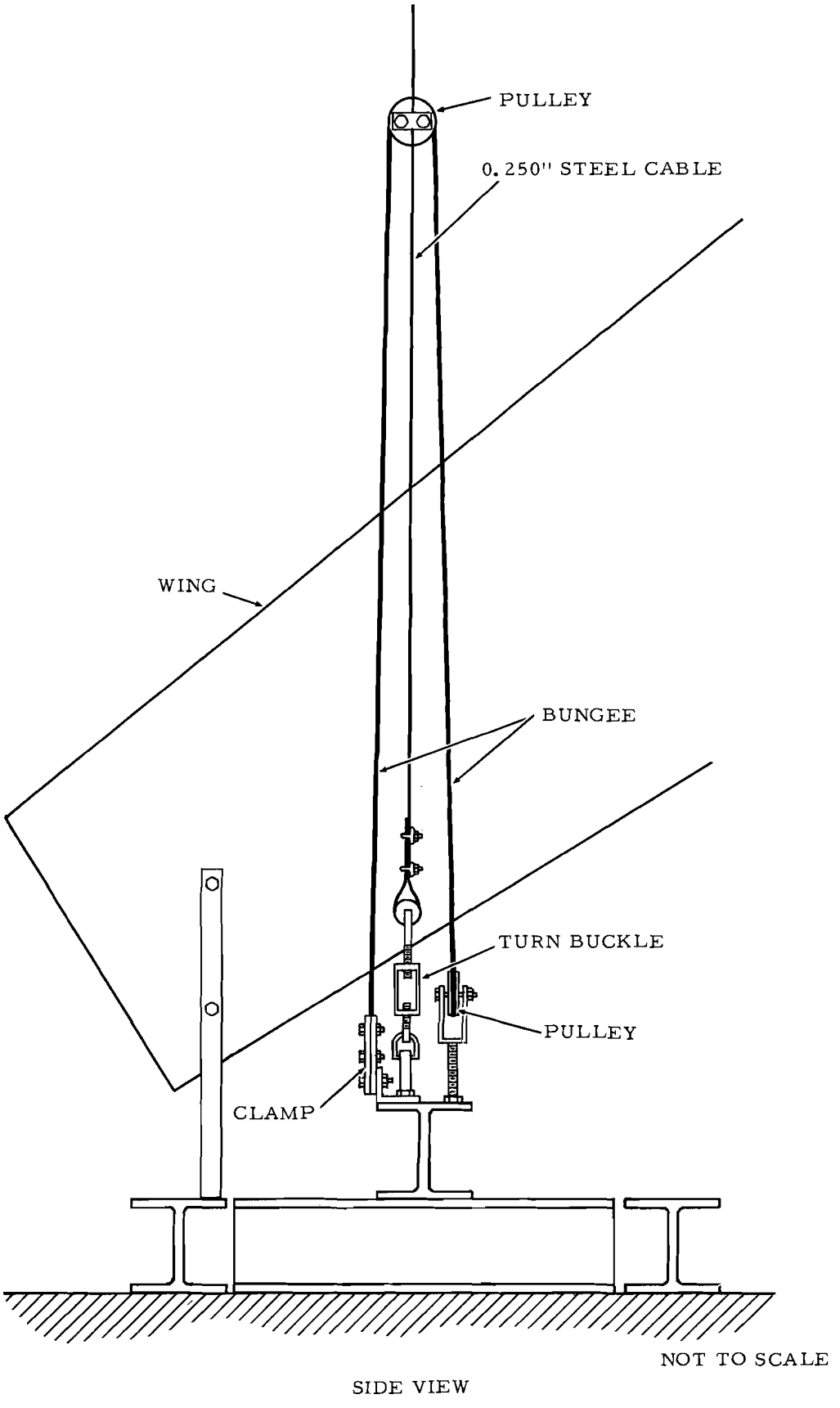

FIGURE 1-2. SIDE VIEW OF DROP TEST SETUP

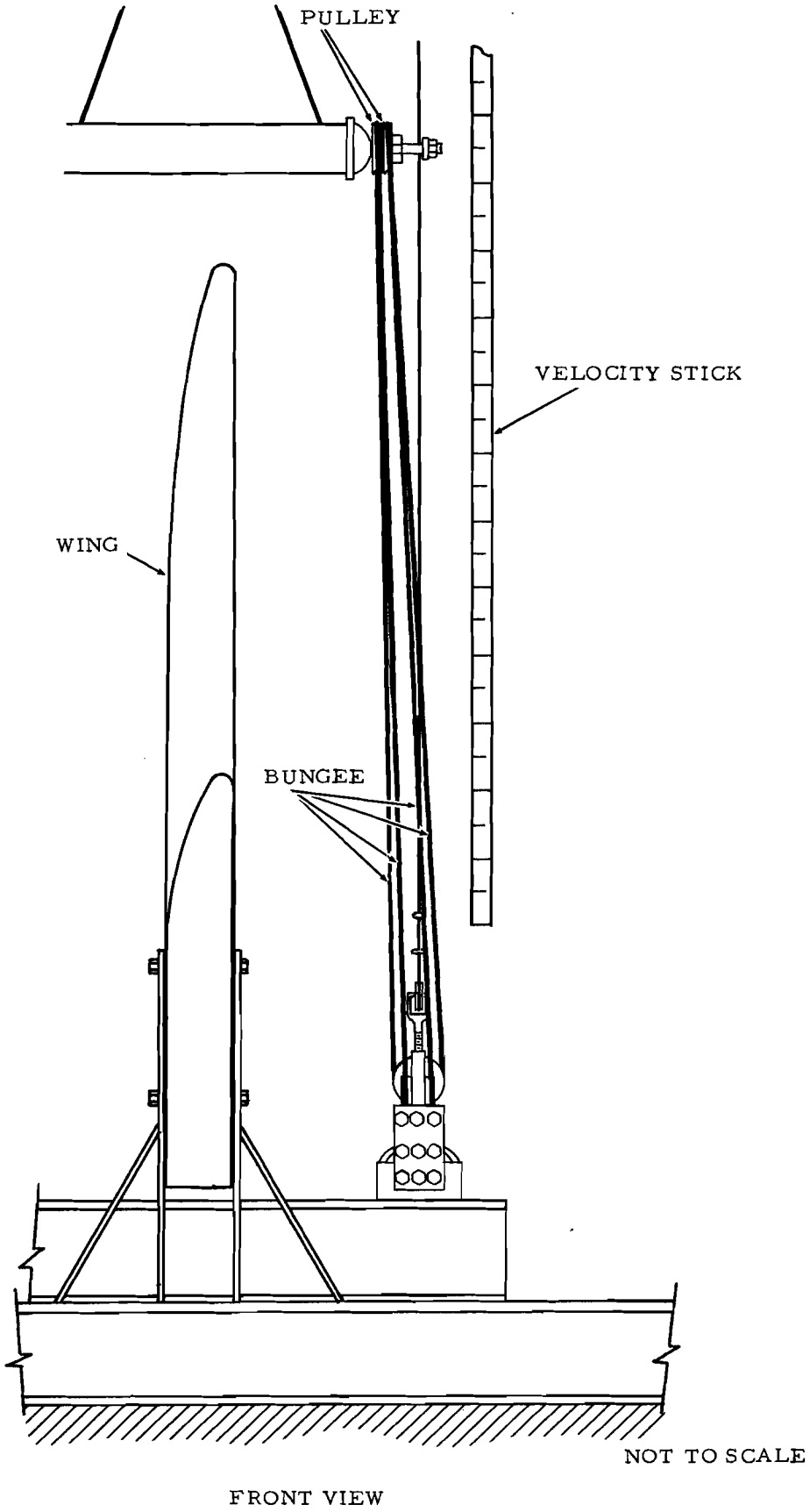

FIGURE 1-3. FRONT VIEW OF DROP TEST SETUP

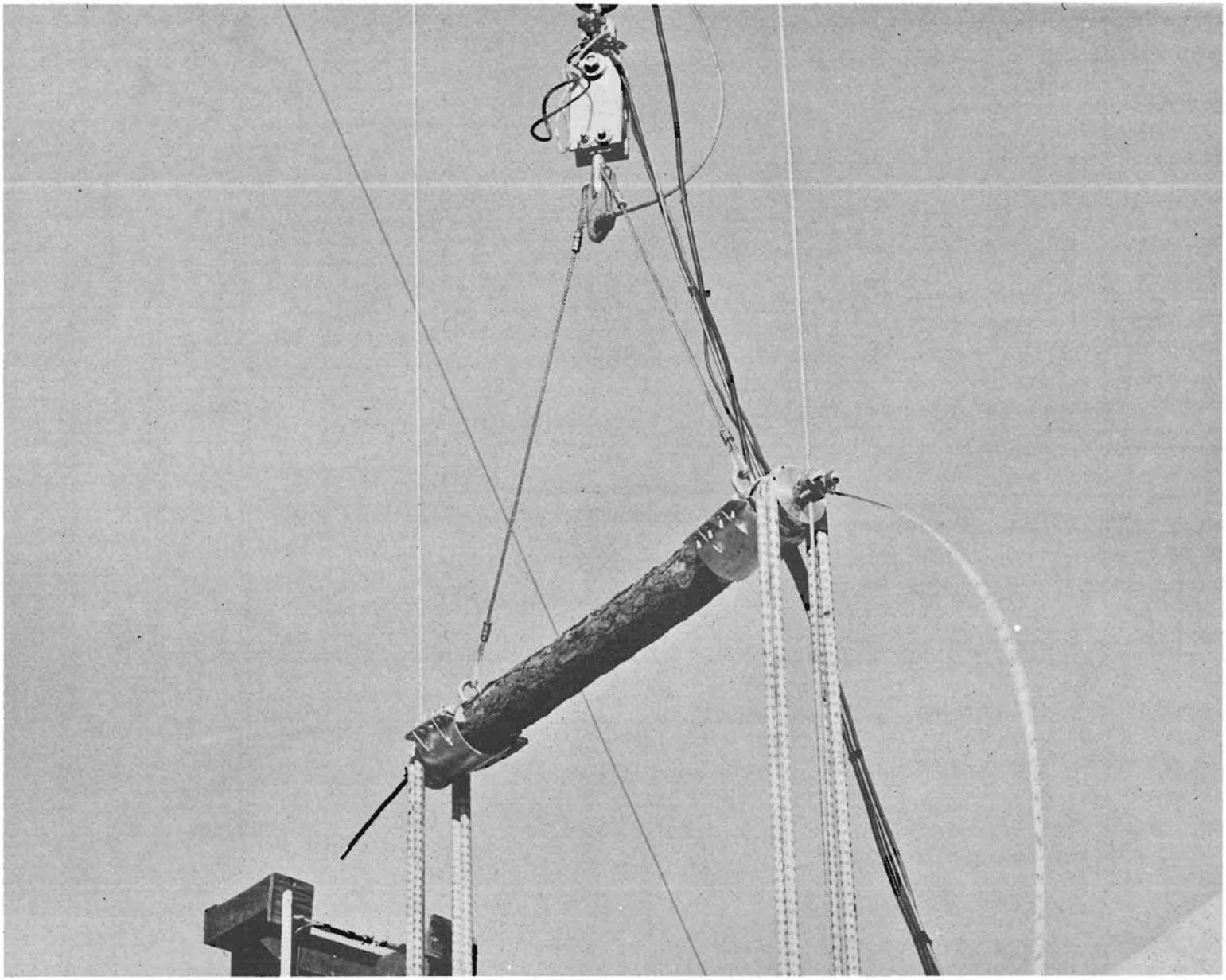

FIGURE 1-4. VIEW OF BUNGEE AND OBSTACLE IN DROP TEST SETUP

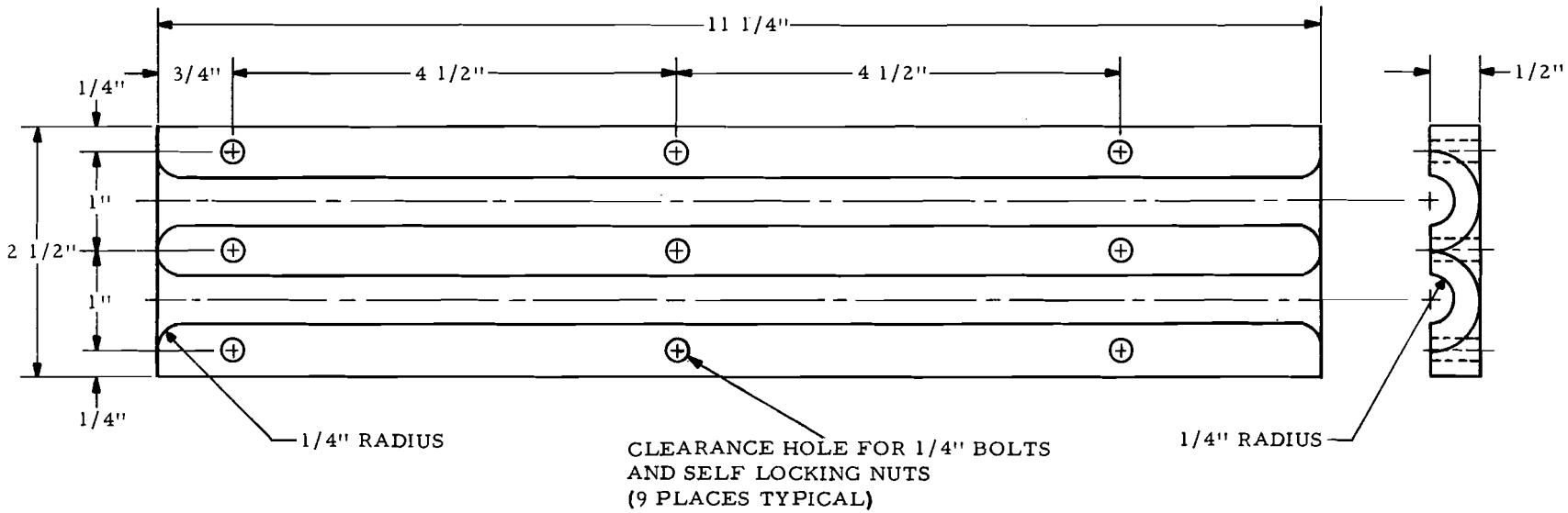

BUNGEE CLAMP - ALUMINUM - 2 REQUIRED

FIGURE 1-5. BUNGEE CLAMP

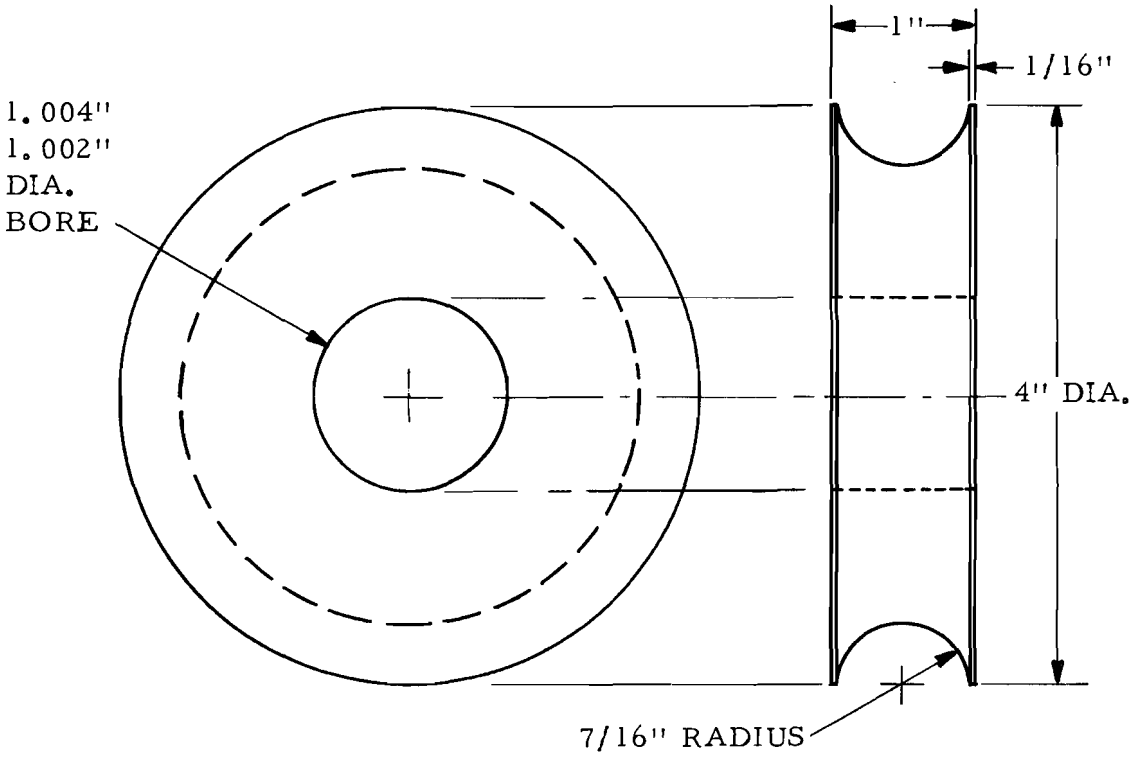

BUNGEE PULLEY - ALUMINUM - 4 REQUIRED

FIGURE 1-6. BUNGEE PULLEY WHEEL

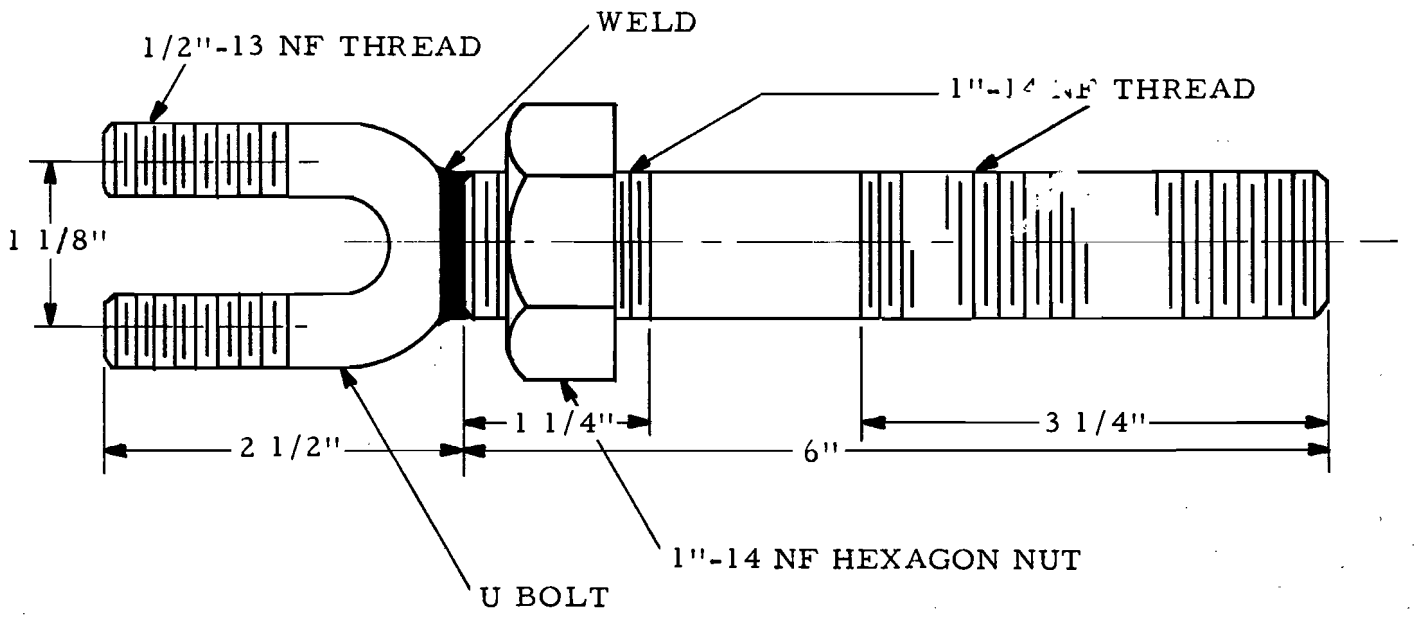

STUD & U BOLT ASSEMBLY-STEEL - 2 REQUIRED

FIGURE 1-7. STUD AND U-BOLT ASSEMBLY

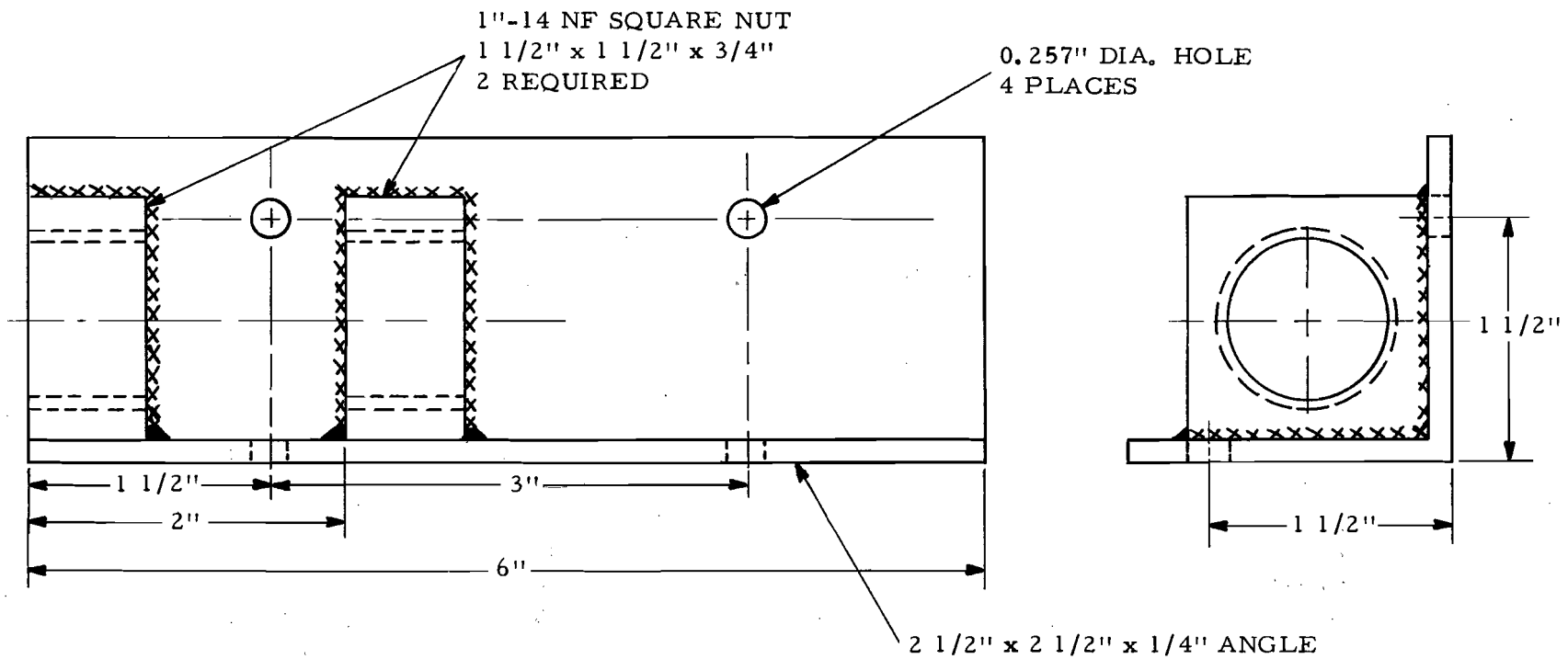

FIGURE 1-8. ANGLE IRON BRACKET ASSEMBLY

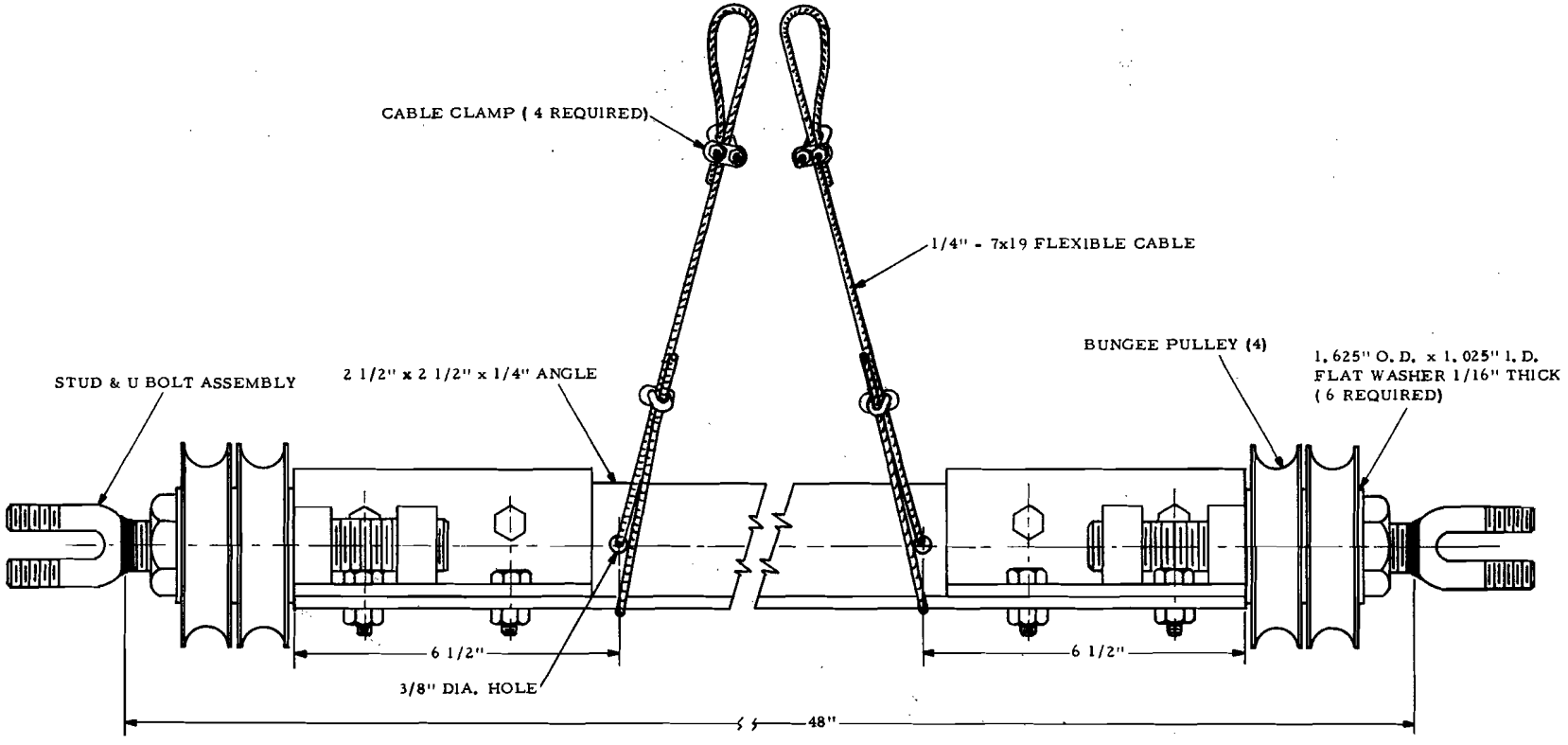

FIGURE 1-9. ANGLE IRON IMPACT ASSEMBLY

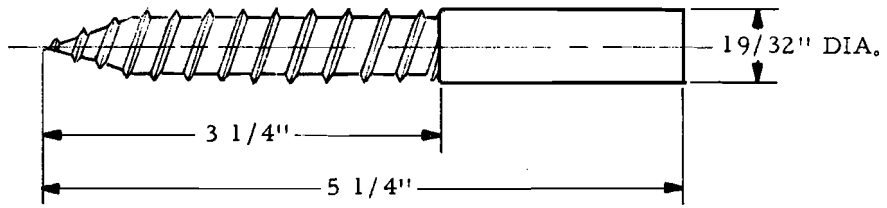

(a) LAG SCREW - STEEL - 2 REQUIRED

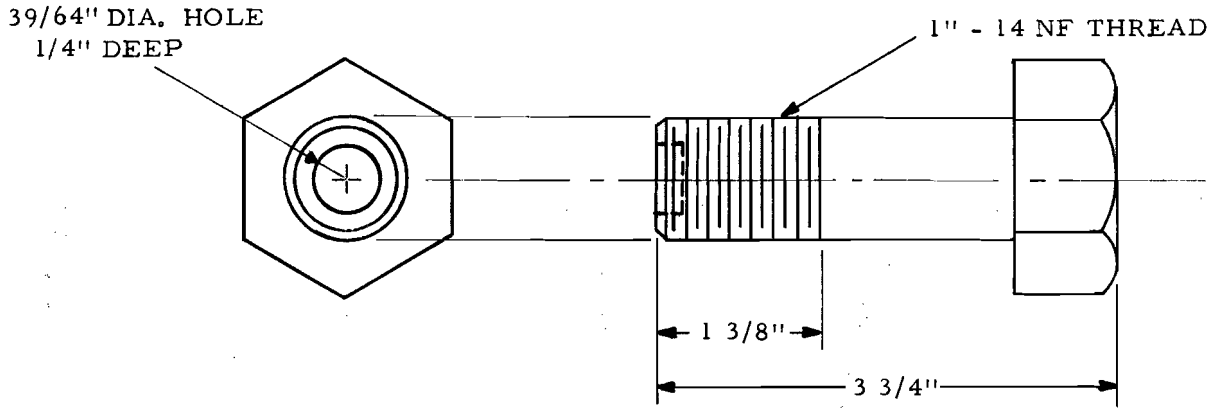

(b) HEXAGON HEAD BOLT - STEEL - 2 REQUIRED

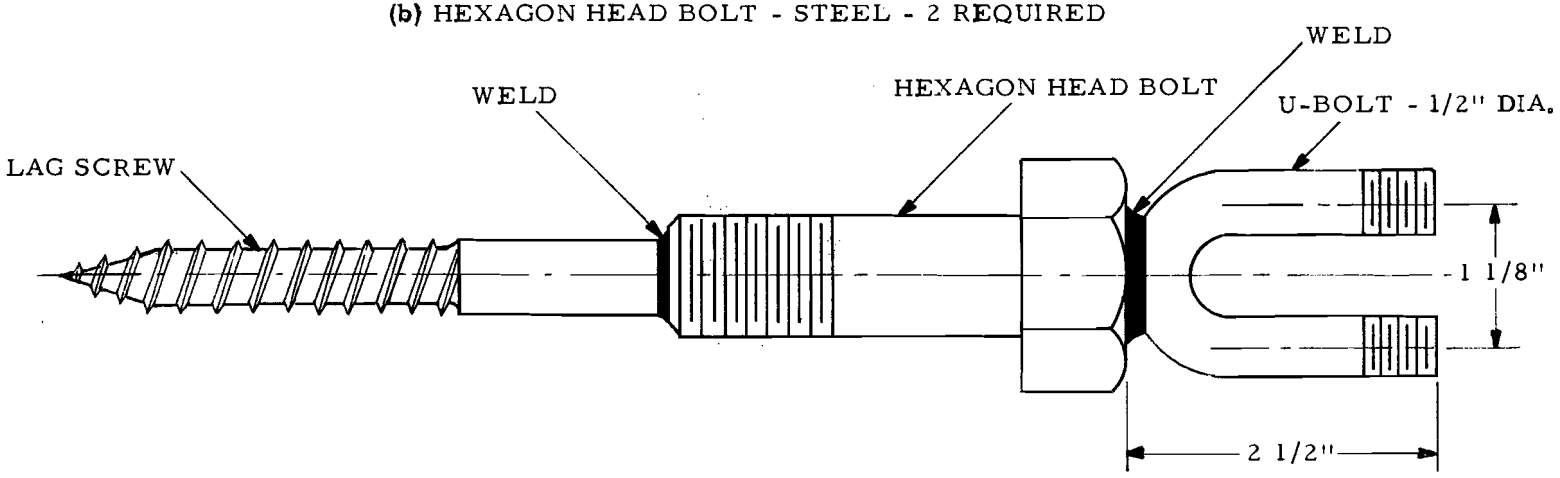

(c) LOG SCREW ASSEMBLY - 2 REQUIRED

FIGURE 1-10. LOG SCREW ASSEMBLY

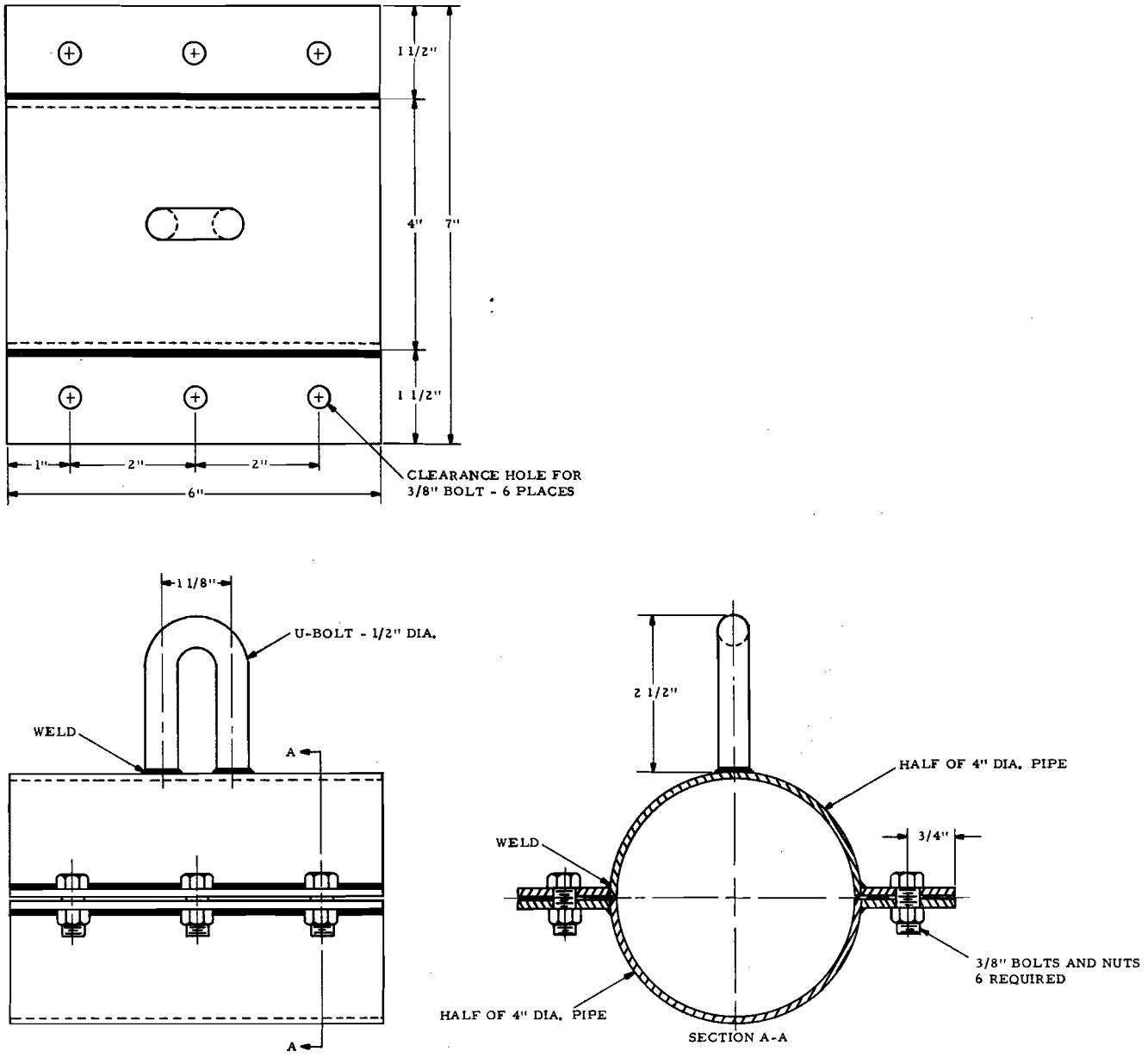

LOG CLAMP - STEEL - 2 REQUIRED

FIGURE 1-11. LOG CLAMP

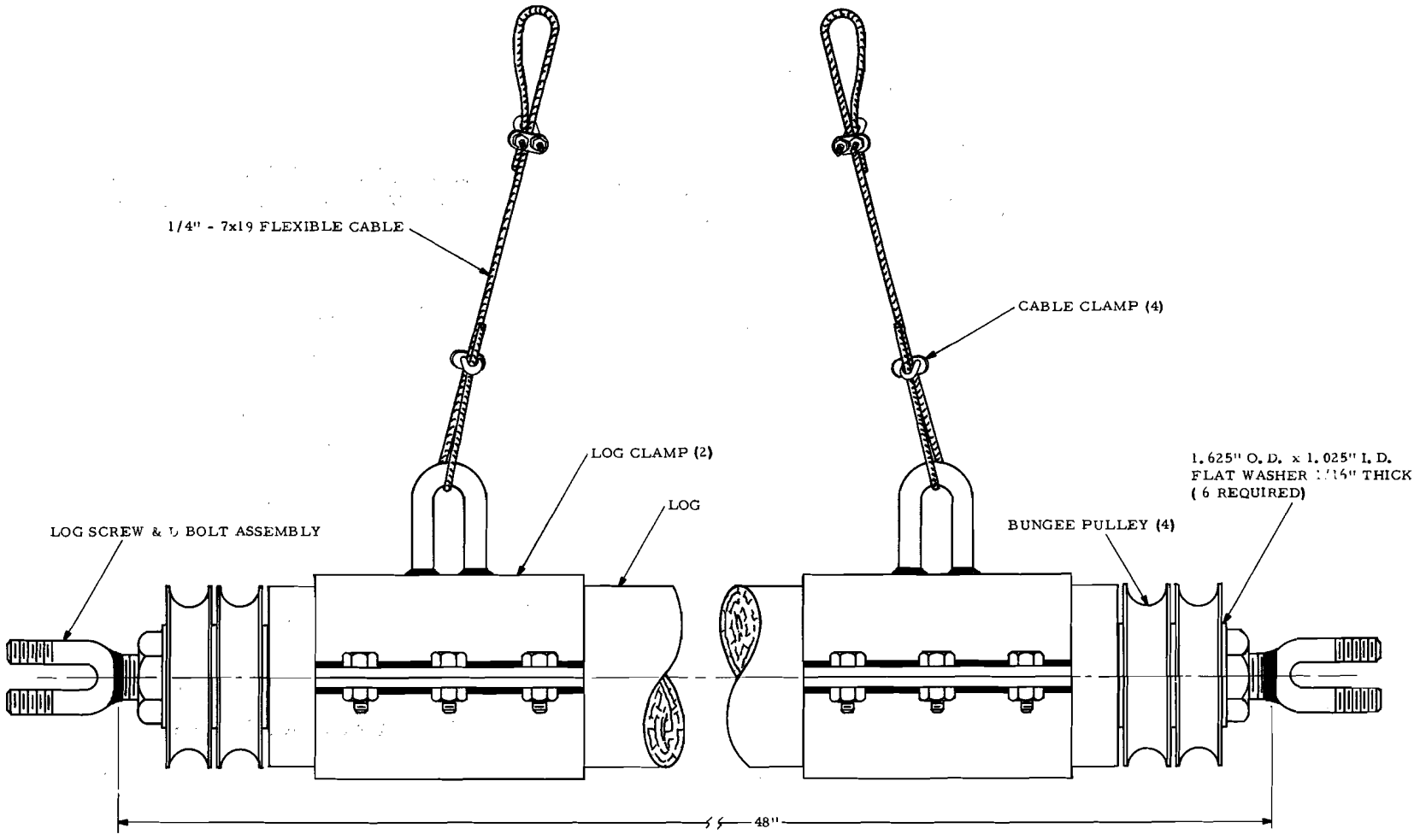

LOG IMPACT ASSEMBLY

FIGURE 1-12. LOG IMPACT ASSEMBLY

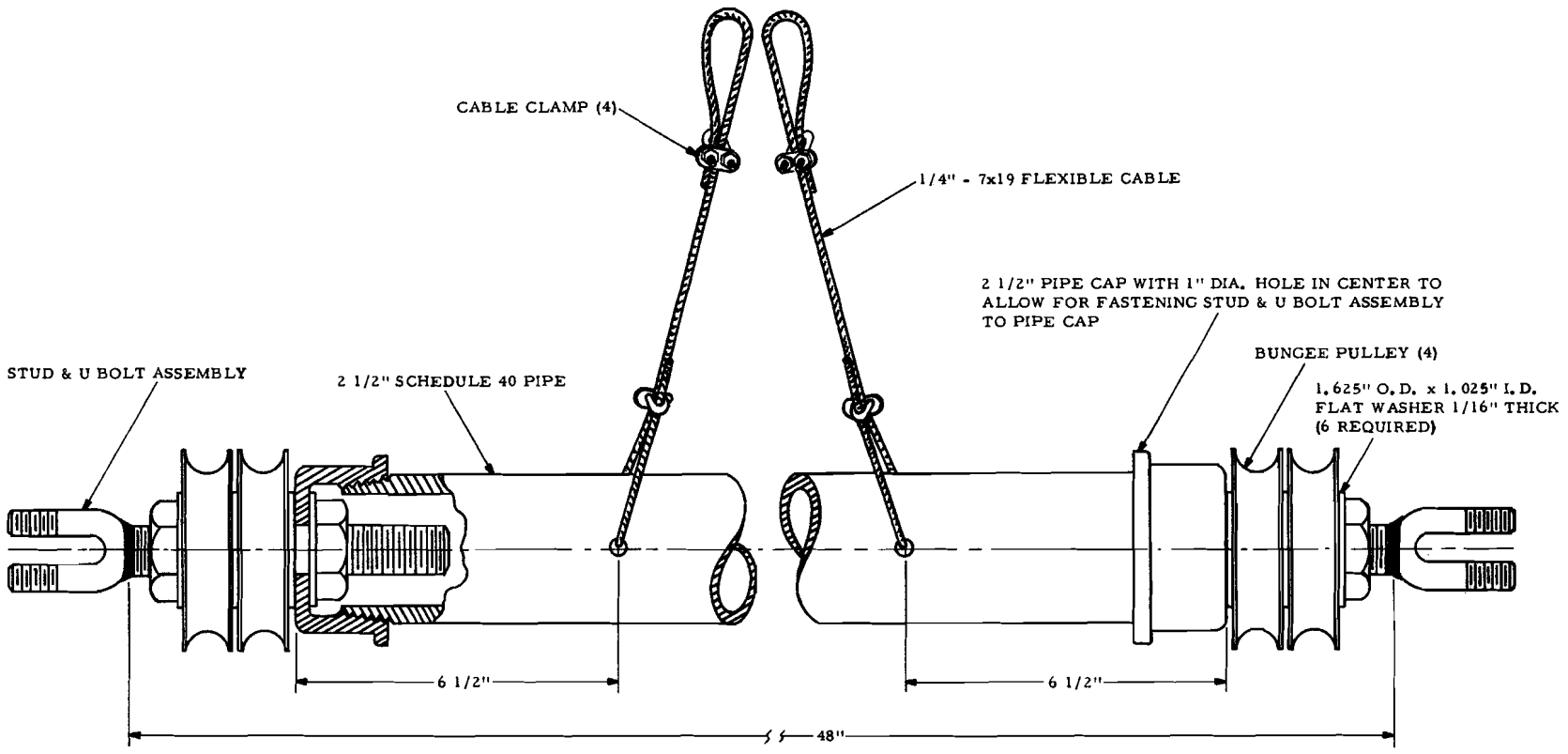

FIGURE 1-13. PIPE IMPACT ASSEMBLY

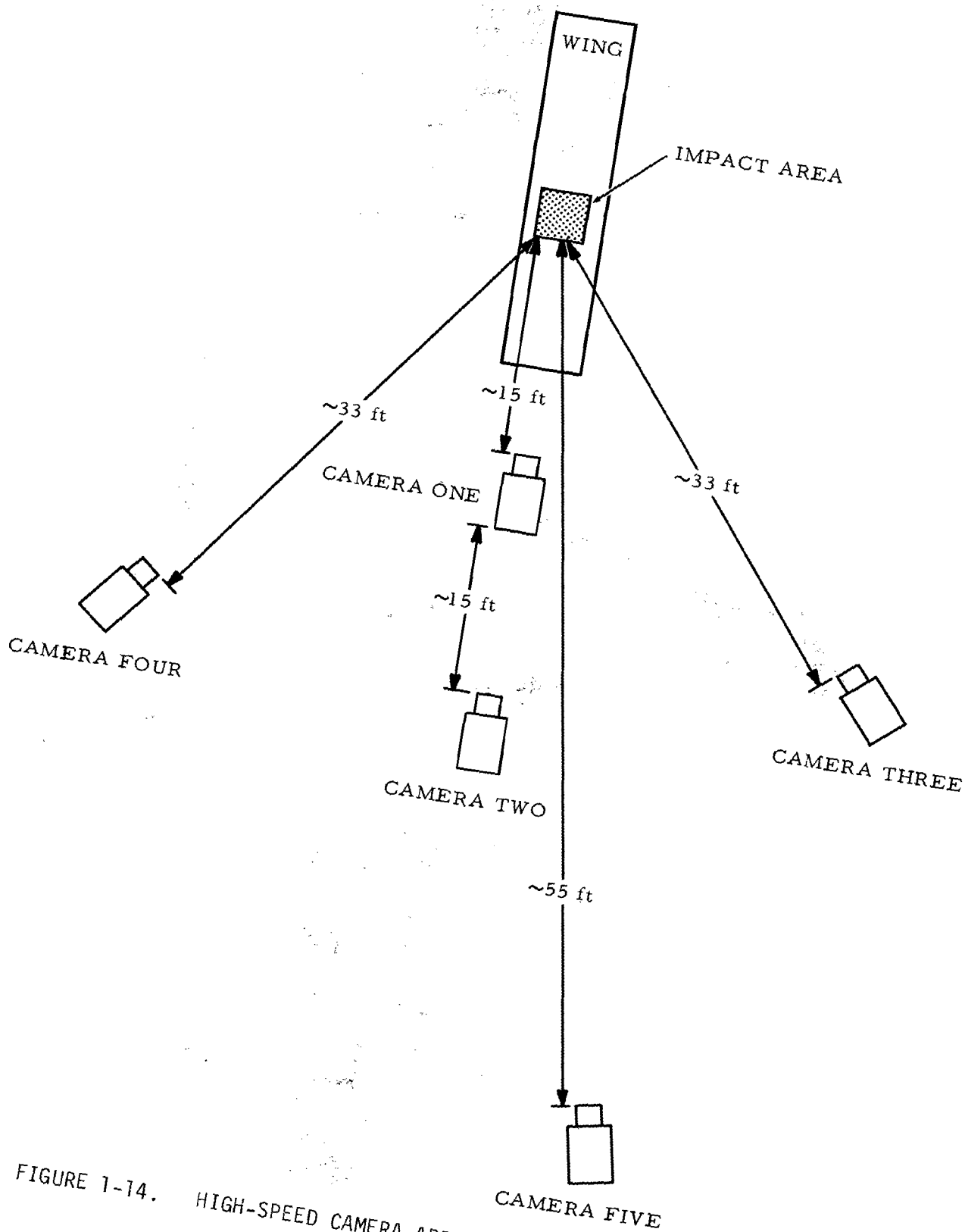

FIGURE 1-14. HIGH-SPEED CAMERA ARRANGEMENT FOR OBSTACLE IMPACTS

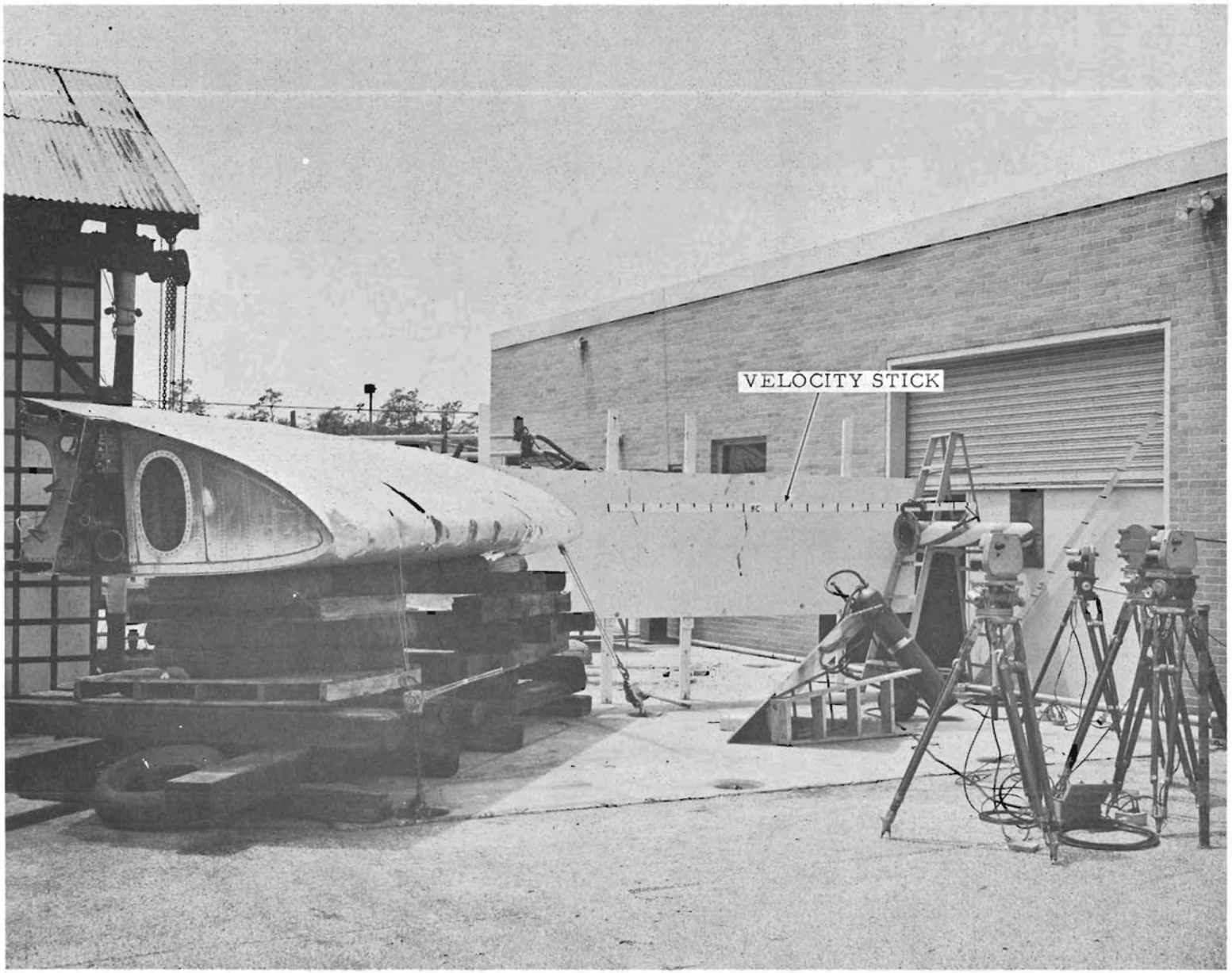

FIGURE 1-15. OVERALL VIEW OF BIRD IMPACT TEST ARRANGEMENT

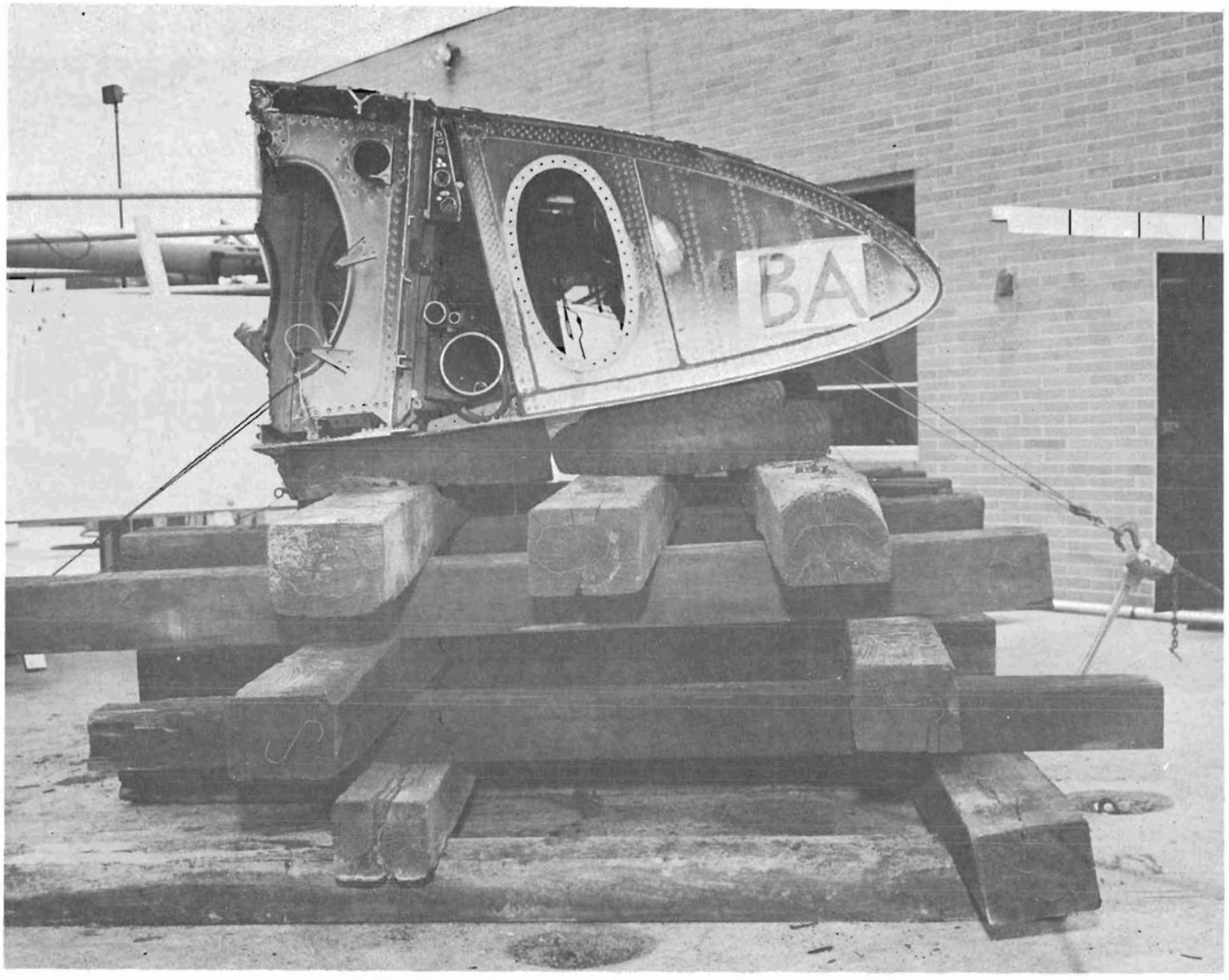

FIGURE 1-16. BIRD IMPACT TEST ARRANGEMENT

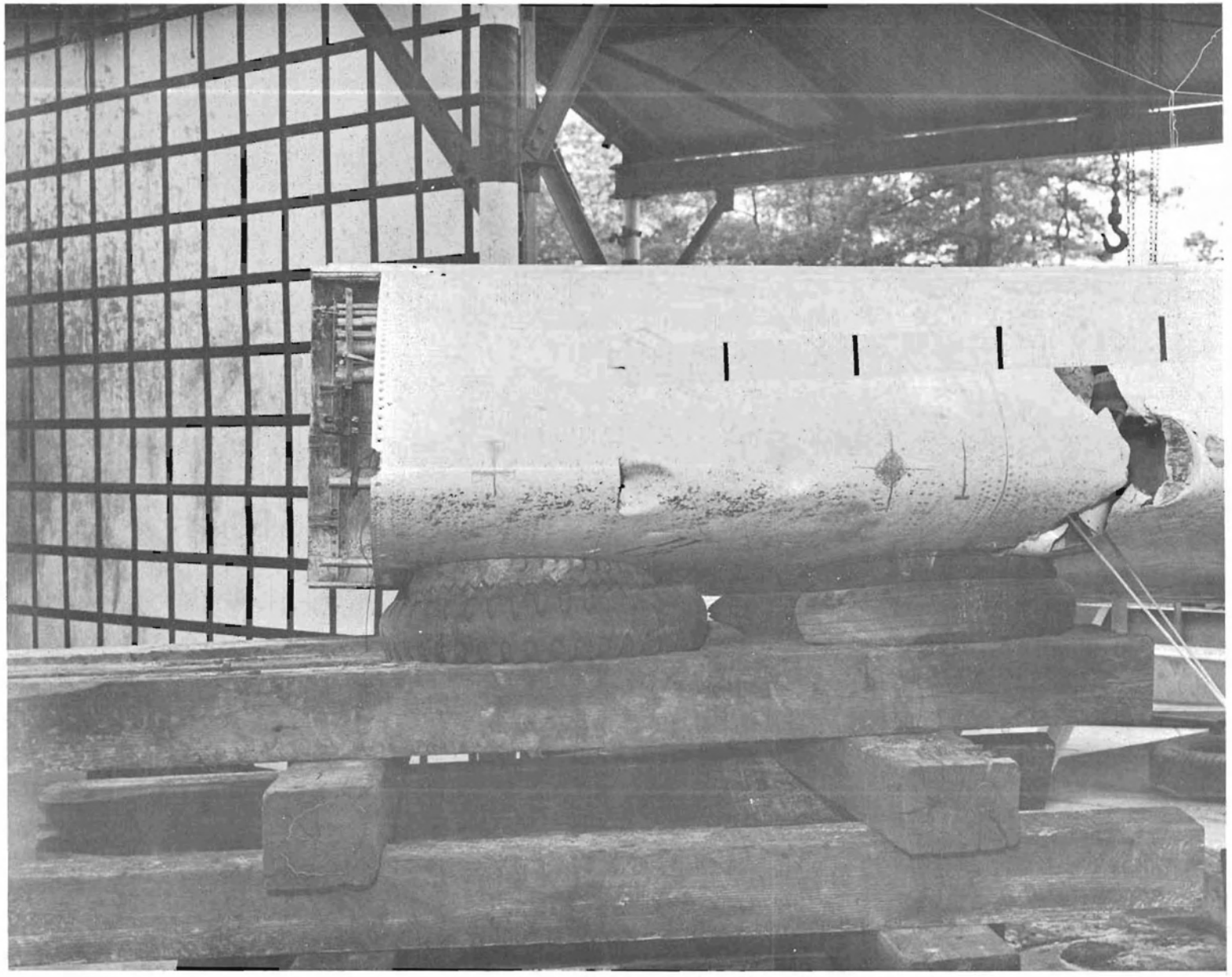

FIGURE 1-17. BIRD IMPACT TEST ARRANGEMENT

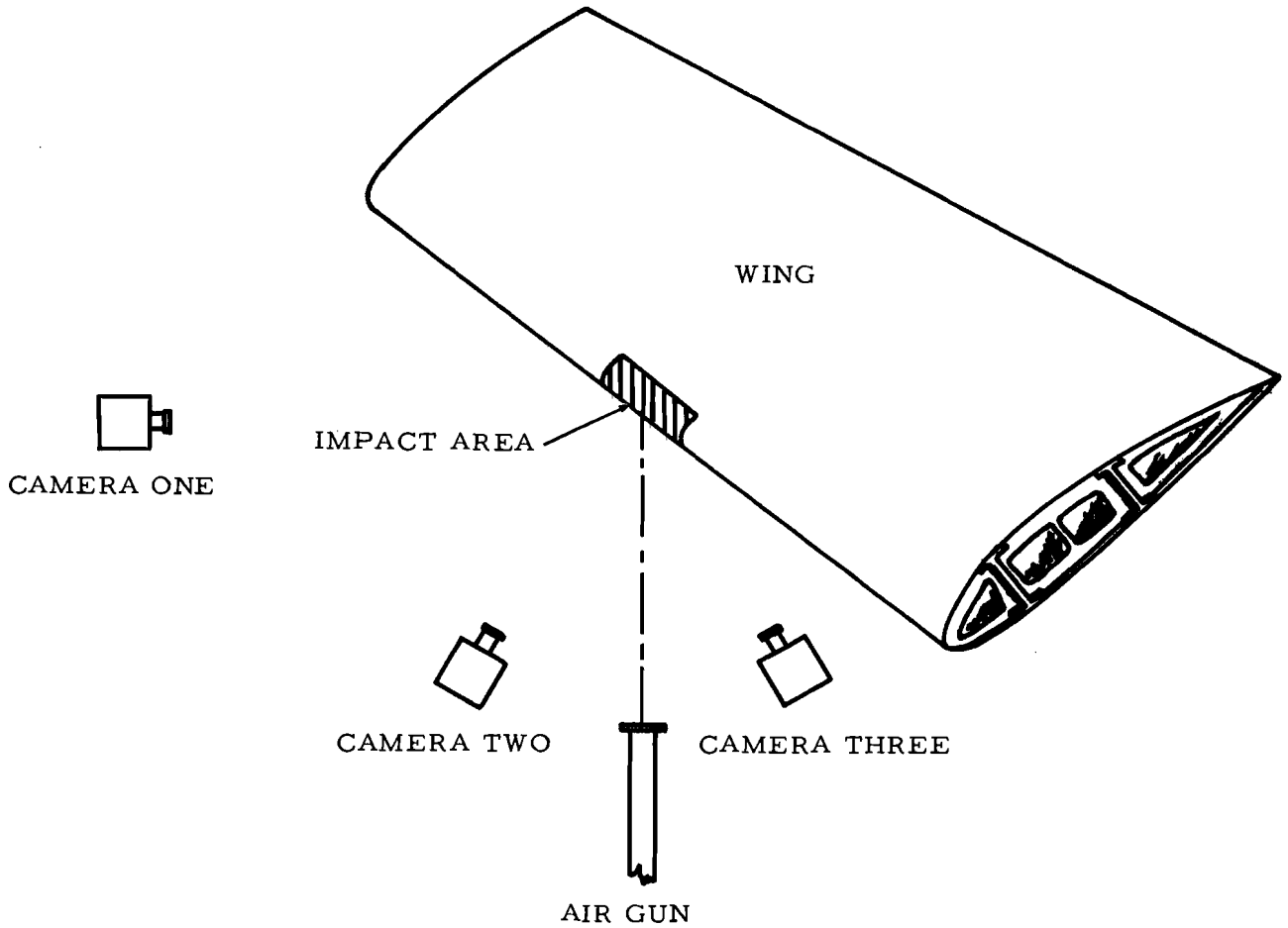

FIGURE 1-18. HIGH-SPEED CAMERA ARRANGEMENT FOR BIRD IMPACTS