Report No. FAA-RD-74-204
NA 74-19
COPY 1
FAA WJH Technical Center
00090810
NAFEC
LIBRARY
MAR 7 1975
RECEIVED

EVALUATION OF A HIGH-CAPACITY, FIREFIGHTING FOAM-DISPENSING SYSTEM

George B. Geyer
Lawrence M. Neri
Charles H. Urban

JANUARY 1975

FINAL REPORT

Document is available to the public through the
National Technical Information Service,
Springfield, Virginia 22151

Prepared for

U.S. DEPARTMENT OF TRANSPORTATION
FEDERAL AVIATION ADMINISTRATION
Systems Research & Development Service
Washington, D. C. 20590

NOTICE

This document is disseminated under the sponsorship of the Department of Transportation in the interest of information exchange. The United States Government assumes no liability for its contents or use thereof.

Technical Report Documentation Page

1. Report No. FAA-RD-74-204	2. Government Accession No.	3. Recipient's Catalog No.
4. Title and Subtitle EVALUATION OF A HIGH-CAPACITY, FIREFIGHTING, FOAM-DISPENSING SYSTEM		5. Report Date January 1975
		6. Performing Organization Code
7. Author(s) George B. Geyer, Lawrence M. Neri, and Charles H. Urban		8. Performing Organization Report No. FAA-NA-74-19
9. Performing Organization Name and Address Federal Aviation Administration National Aviation Facilities Experimental Center Atlantic City, New Jersey 08405		10. Work Unit No. (TRAIS)
		11. Contract or Grant No. 081-431-020
12. Sponsoring Agency Name and Address U.S. Department of Transportation Federal Aviation Administration Systems Research and Development Service Washington, D.C. 20590		13. Type of Report and Period Covered Final September - October 1973
		14. Sponsoring Agency Code
15. Supplementary Notes		

16. Abstract

A series of six tests was conducted using a single barrel mechanical foam nozzle discharging 1,800 gallons of foam solution per minute (English/metric conversion factors are given in appendix A). Three experiments were conducted with protein foam and three using aqueous-firm-forming-foam (AFFF). The tests were designed to dispense foam solution at a fixed rate in simulated full-scale fire-modeling experiments in which the fire area was smaller than the total area of foam application, thereby conserving fuel and reducing atmospheric contamination. The time required to foam-cover concentric circular diked areas of 12,000, 18,000, and 36,000 square feet containing a three-dimensional fire in a 2,827 square foot fire-pool was determined. The foam quality and ground patterns produced by each agent were determined for solution rates of 840 and 1,800 gallons per minute.

17. Key Words Aircraft Ground Crash Fires; Extinguishing Agents; Fire Fighting Vehicles; Suppression of Aircraft Fires; Suppression Equipment		18. Distribution Statement Document is available to the public through the National Technical Information Service, Springfield, Virginia 22151	
19. Security Classif. (of this report) Unclassified	20. Security Classif. (of this page) Unclassified	21. No. of Pages 46	22. Price

Form DOT F 1700.7 (8-72) Reproduction of completed page authorized

TABLE OF CONTENTS

	Page
INTRODUCTION	1
Purpose	1
Background	1
Scope	1
DISCUSSION	2
Description of the Airport Firefighting Foam-Dispensing System	2
Test Procedures	8
Foam Quality Determination	8
Full-Scale Fire-Modeling Experiments	11
Fire Test Facility and Test Methods	11
Estimation of Fire Control Times for Protein Foam and AFFF by Maintaining a Fixed-Fire Size and Varying the Area of Foam Application	13
Driver/Operator Visibility From the Cab of the Firefighting Vehicle During Foam Discharge	25
Results of the Simulated Full-Scale Fire Tests	27
SUMMARY OF RESULTS	34
CONCLUSIONS	35
RECOMMENDATIONS	36
REFERENCES	37
APPENDIXES	
A - Factors for Converting from English to Metric Units	
B - High-Capacity Foam-Dispensing Vehicle from Manufacturer's Literature (Approximate Cost of the Vehicle as of January 1975, $265,000.00 F.O.B. England)	
C - Electronic Fire-Monitoring Equipment	

LIST OF ILLUSTRATIONS

Figure		Page
1	General Configuration of the Foam Nozzle	3
2	General Configuration of Foam Barrel Shaper	4
3	Foam Discharge Ground Patterns Using Protein Foam and AFFF	5
4	Protein Foam Depth Contour Obtained at a Solution Rate of 1,800 Gal/Min Using the Straight-Stream Discharge	6
5	Foam Ground Pattern and Method for Measuring the Foam Depth Profile	7
6	Foam Viscometer	9
7	Viscosity of Protein Foam and AFFF as a Function of Time After Formation	10
8	Plan View of the Fire Test Bed	12
9	Pictorial View of the Fire Test Bed	13
10	View of the Fire Test Bed During the Fire Preburn Period	15
11	Test 1 - Configuration of the Fire Test Bed and the Area of Protein Foam Coverage	16
12	Test 2 - Configuration of the Fire Test Bed and the Area of Protein Foam Coverage	18
13	Test 3 - Configuration of the Fire Test Bed and the Area of Protein Foam Coverage	19
14	Test 4 - Configuration of the Fire Test Bed and the Area of AFFF Coverage	21
15	Test 5 - Configuration of the Fire Test Bed and the Area of AFFF Coverage	23
16	Test 6 - Configuration of the Fire Test Bed and the Area of AFFF Coverage	24
17	Approximate Visual Angles of Remote Nozzle Operation From Within the Cab of the "Pathfinder" Airport Crash Truck	26

LIST OF ILLUSTRATIONS (continued)

Figure		Page
18	Panoramic Views from the Driver/Operator's Seat in the Firefighting Vehicle Showing a "Target", Aircraft Through the Center of the Windshield	29
19	Foam Discharge (Fire Control) Time as a Function of the Solution Application Rate Using Protein Foam and AFFF	31
20	Fire Control Time of the Central Pool Fire (2,827 ft^2) As a Function of the Foam Solution Application Rate Using Protein Foam and AFFF	31
21	Actual Area Covered by Foam as a Percentage of the Total Area of Foam Application	33
B-1	Massport's Pyrene "Pathfinder" (Chubb Fire Security Limited) Airfield Firefighting Crash Truck	B-1

LIST OF TABLES

Table		Page
1	Quality of Protein Foam and AFFF Produced by the 1,800 Gal/Min Dispensing System	10
2	Summary of Test Results Using Protein Foam and AFFF	28

INTRODUCTION

PURPOSE.

It was the objective of this activity to obtain meaningful data concerning the foam quality and dispensing effectiveness of a high-capacity (1,800 gallons per minute (gal/min)) airport firefighting system using protein foam and aqueous-film-forming-foam (AFFF) under variable environmental airport conditions employing a modified fire test procedure.

BACKGROUND.

The development of larger commercial and military aircraft has emphasized the need for improved post-crash firefighting capabilities to effectively control the fire hazards associated with an increase in the quantity of fuel on board. The technology of fire suppression and extinguishment must, therefore, advance equally to meet the problems of these increasing hazards. One approach to a potential solution of the problem was the development of a firefighting system with a high-foam solution discharge rate and a long-range foam stream. The purpose of the high-capacity solution discharge was to provide the means for an effective foam discharge range equal to the fuselage length of the largest aircraft currently in commercial or military use. This philosophy was expressed by several members during the first Rescue and Fire Fighting Panel (RFFP-1) of the International Civil Aviation Organization (ICAO) held during March 1970 in Montreal, Canada.

SCOPE.

The scope of the project included a determination of the simulated fire control and extinguishing times representative of jet A fuel fires estimated to be consistent with the largest aircraft currently in service (reference 1) using a foam solution discharge rate of 1,800 gal/min (appendix A).

The foam agents used in the experiments included AFFF conforming to the requirements contained in reference 2 and protein foam manufactured to conform with the requirements of the pertinent federal specifications (reference 3). The quality of foam produced by each firefighting agent was evaluated in terms of the expansion ratio, 25-percent solution drainage time and foam viscosity. Foam ground patterns were determined for each agent in accordance with the procedures provided in reference 4.

A limit of one experiment with each foam agent and pit size was imposed on this test series to minimize environmental contamination and conserve fuel.

The high-capacity foam-dispensing system (appendix B) was provided by Boston-Logan International Airport with adequate operating personnel and expertise to perform and participate in the firefighting experiments.

DISCUSSION

DESCRIPTION OF THE AIRPORT FIREFIGHTING FOAM-DISPENSING SYSTEM.

The foam-dispensing system comprised a turret nozzle and a single-stage self-priming centrifugal pump. The foam monitor was hydraulically operated by remote control from a console housing a series of electro-pneumatic selection valve controls from either the normal position on the monitor platform with a mechanical override capability, or from the vehicle driver's control panel. Photographs of the foam nozzle and monitor are presented in figures 1 and 2.

The nozzle was a single-barrel unit capable of selectively discharging either 840 or 1,800 gallons of foam solution per minute. The monitor had a rotational capability of 330° with an elevation of 50° and an angle of depression of 5°. This nozzle provided means for imparting high energy to the foam stream by creating a condition of turbulence and shear to the foam during its passage through the barrel. Foam shapers, at the mouth of the barrel, were able to modify the discharge from straight stream to the fully dispersed pattern in a continuous manner. The straight stream protein foam discharge pattern at 200 pounds per square inch pressure and 1,800 gal/min was approximately 250 feet long and 47 feet wide, while the fully dispersed pattern was 140 feet long and 57 feet wide. AFFF under similar test conditions produced an effective straight stream pattern approximately 255 feet long and 50 feet wide and a fully dispersed pattern 160 feet long and 62 feet wide. In these experiments the AFFF tended to "feather" around the perimeter of the pattern to a somewhat greater extent than protein foam.

From a comparative performance standpoint it is noteworthy that the foam ground pattern produced by a composite foam nozzle (reference 1) discharging a protein foam solution at its maximum rate of 1,000 gal/min had a reach of 188 feet and a width of 35 feet.

The foam ground patterns produced with protein foam at solution discharge rates of 840 and 1,800 gal/min with both the straight and dispersed streams and for AFFF at 1,800 gal/min with the straight and dispersed streams are presented in figure 3.

A foam depth profile contour is shown in figure 4 which was developed in accordance with the procedure contained in reference 4 using protein foam and the straight-stream discharge at 1,800 gal/min with the foam nozzle elevated at an angle of 30° (figure 5A). In this procedure a grid of steel stakes is laid out on 3-foot centers over the anticipated foam ground pattern area.

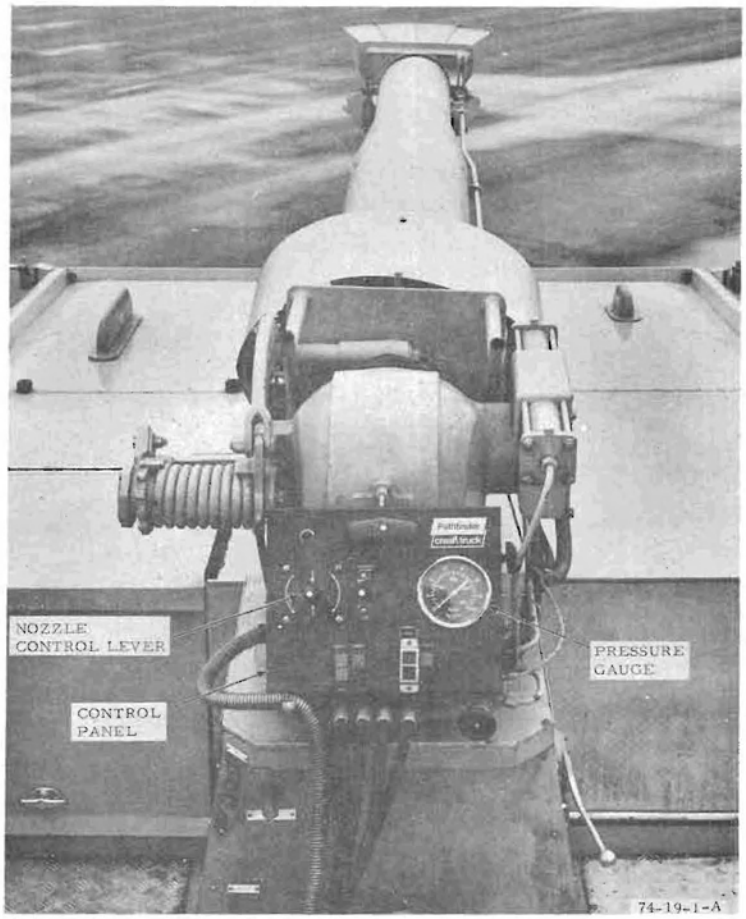

A. VIEW OF THE CONTROL PANEL FROM THE MONITOR PLATFORM

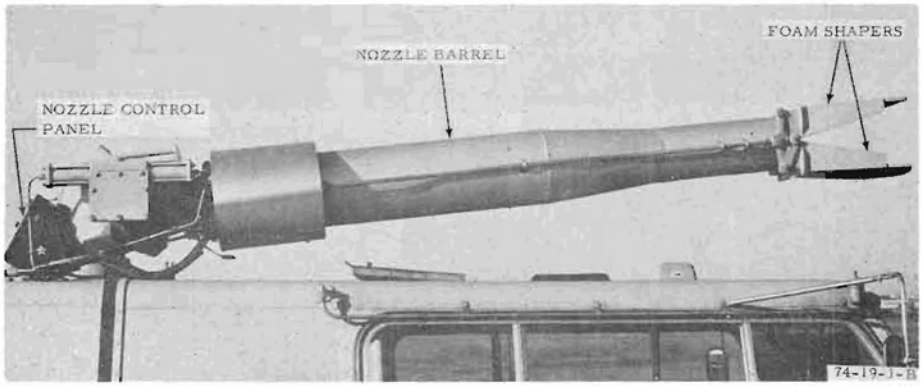

B. SIDE VIEW OF THE FOAM NOZZLE

FIGURE 1. GENERAL CONFIGURATION OF THE FOAM NOZZLE

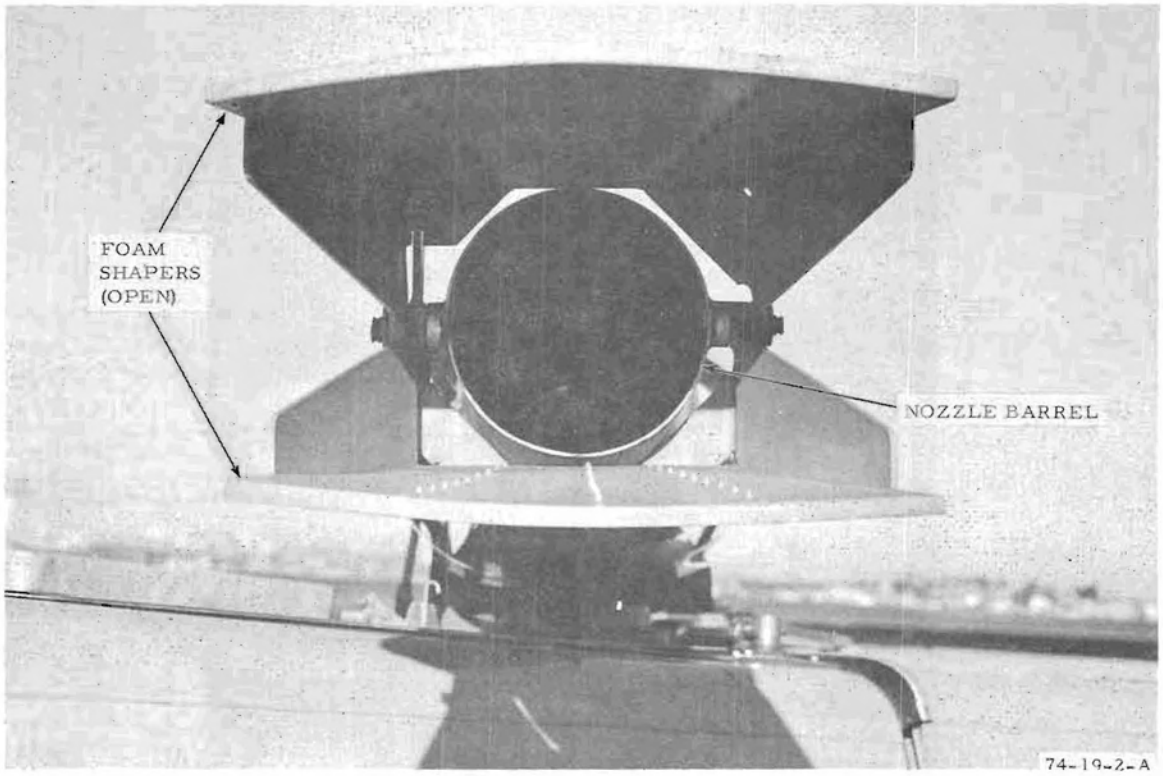

A. FOAM SHAPERS FULLY EXTENDED

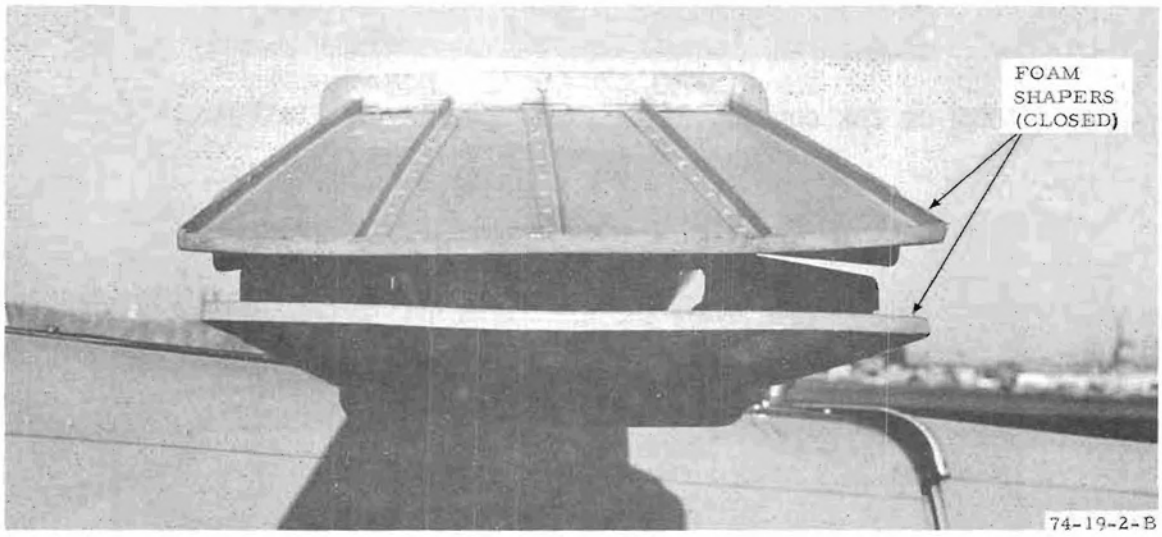

B. FOAM SHAPERS CLOSED

FIGURE 2. GENERAL CONFIGURATION OF FOAM BARREL SHAPER

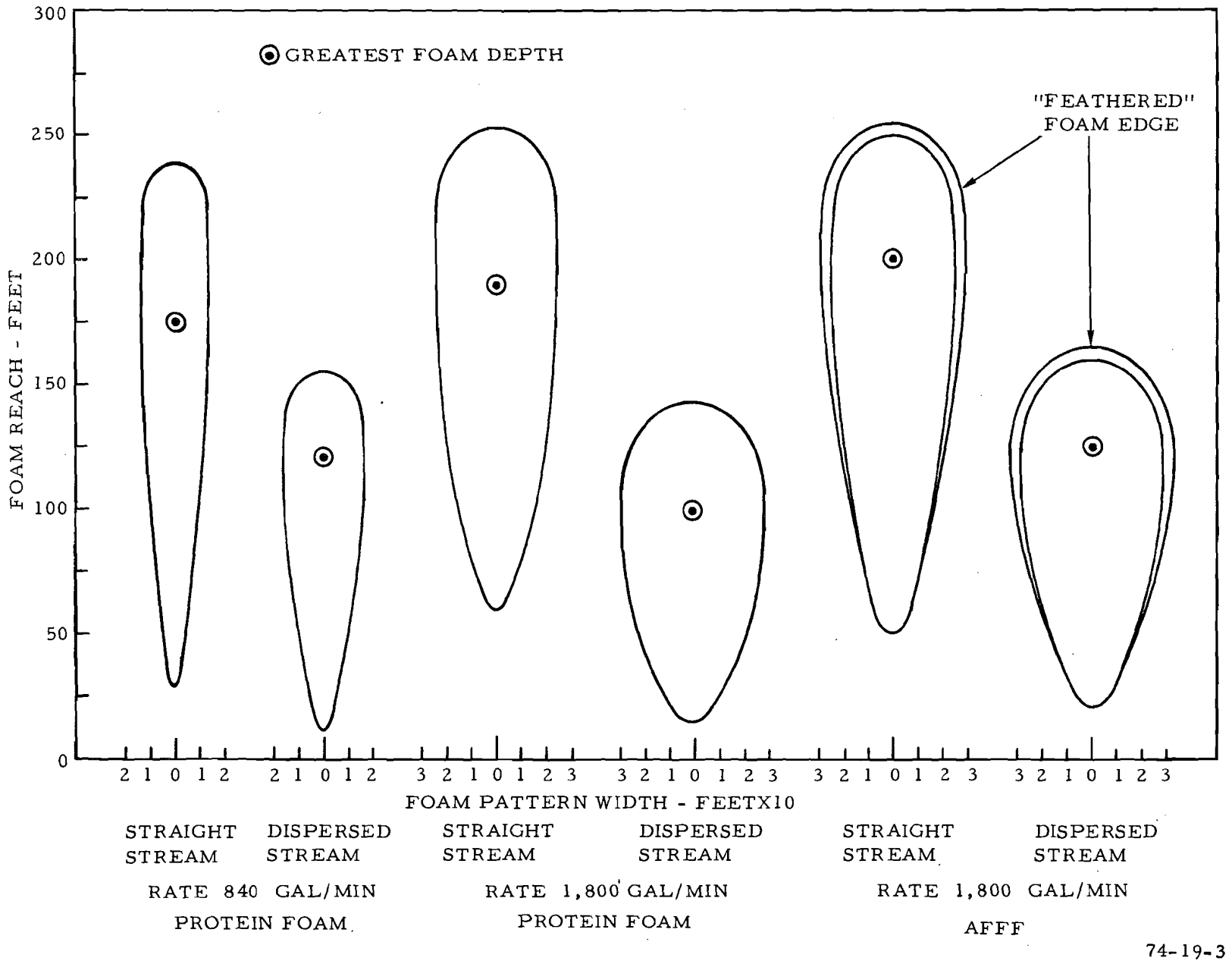

FIGURE 3. FOAM DISCHARGE GROUND PATTERNS USING PROTEIN FOAM AND AFFF

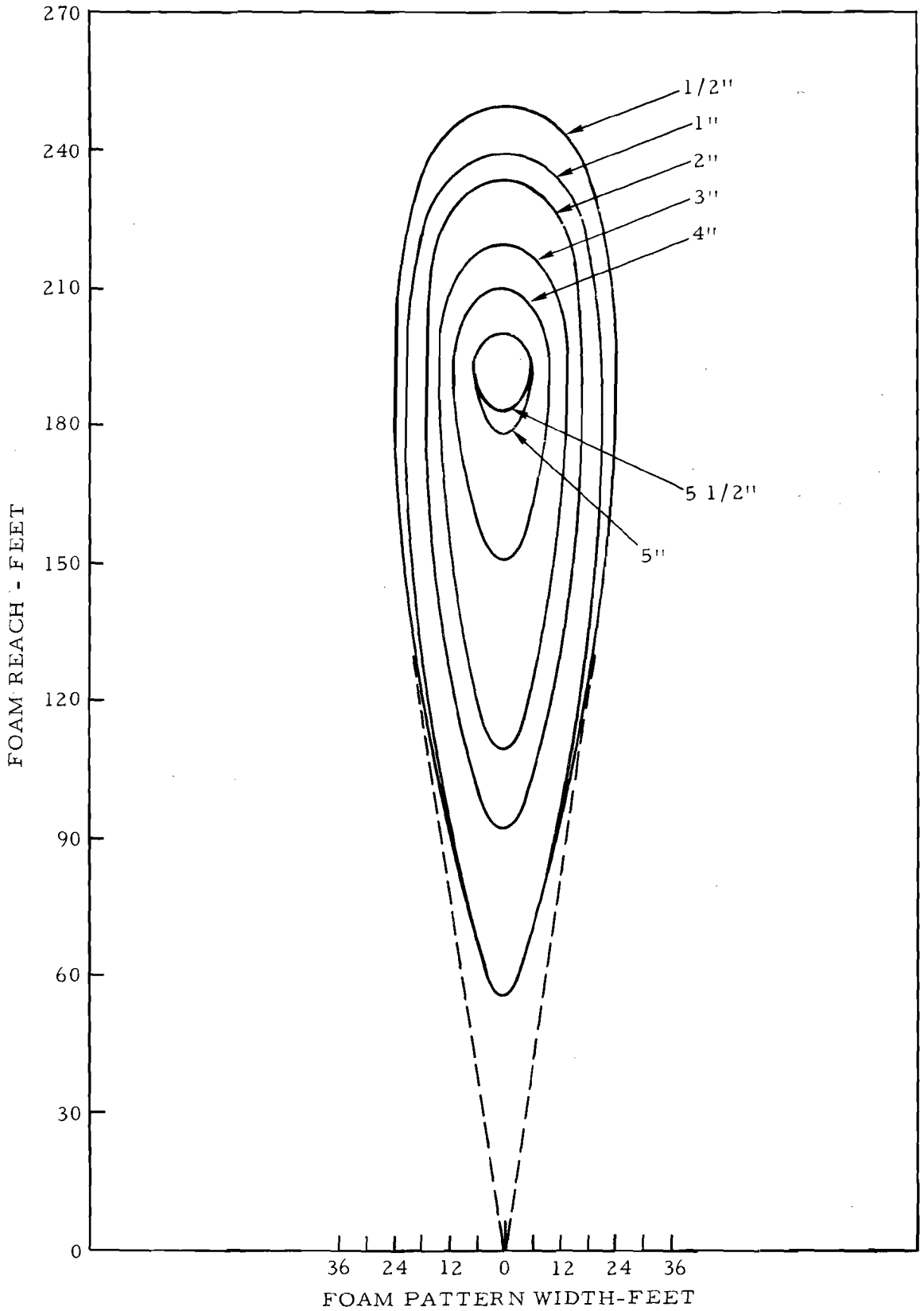

FIGURE 4. PROTEIN FOAM DEPTH CONTOUR OBTAINED AT A SOLUTION RATE OF 1,800 GAL/MIN USING THE STRAIGHT-STREAM DISCHARGE

A. PROTEIN FOAM BEING DISCHARGED AT 1800 GAL/MIN OVER THE STEEL GRID CONFIGURATION

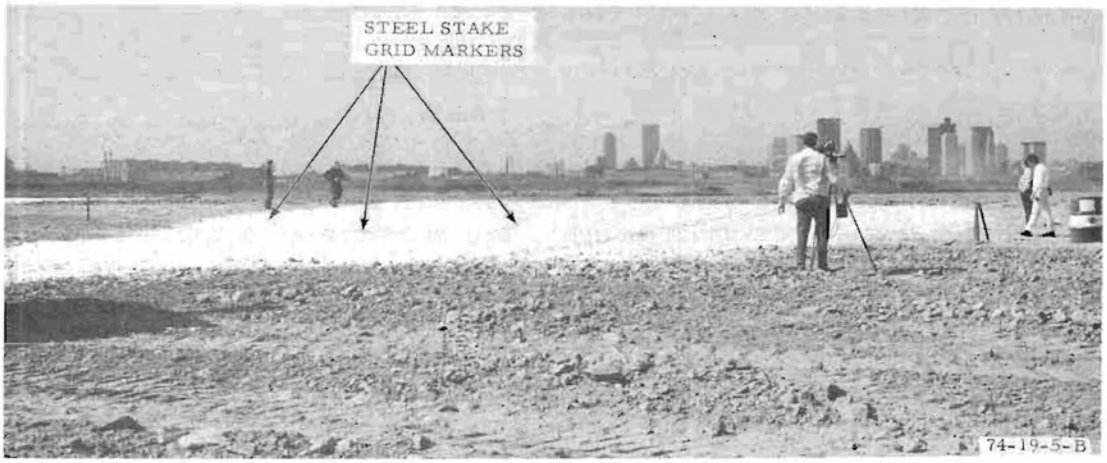

B. MEASUREMENT OF FOAM DEPTH AFTER DISCHARGE TO DETERMINE FOAM DEPTH CONTOUR

FIGURE 5. FOAM GROUND PATTERN AND METHOD FOR MEASURING THE FOAM DEPTH PROFILE

After foam has been discharged over the grid for a period of 30-seconds the depth accumulated at each stake is measured from which data the foam depth contour is constructed.

The protein foam discharge pattern and the grid of 60 steel stakes spaced on 3-foot centers are shown pictorially in figure 5B.

TEST PROCEDURES.

FOAM QUALITY DETERMINATION. The quality of expanded foams produced by protein foam (reference 3) and AFFF (reference 2) liquids was evaluated in terms of the expansion ratio and 25-percent solution drainage time in accordance with the methods contained in reference 4.

A third physical property of firefighting foams, not included as a required parametric control of quality in current federal or military specifications, is viscosity.

The instrument employed in measuring foam viscosity in these experiments is shown in figure 6. Essentially the viscometer consists of a constant speed, rotating torsion wire and vane which may be adjusted to shear a sample of foam held in a special container. The torsion wire and vane are rotated by a geared motor in the head of the instrument. The torsion wire is enclosed in a brass tube on the downward facing spindle of the gear box. Attached to the lower end of the tube is an adjustable circular scale which is divided into 100 divisions. The vane is attached to the torsion wire which is also fitted with a steel disk of sufficient size to keep the wire taut. These components are arranged so that they can be moved vertically as a unit, and the sliding head is fitted with adjustable stops which can be preset so that when the head is depressed the vane is fully immersed in the foam to its uppermost edge. The dimension of foam viscosity determined by this method is dynes per square centimeter (dyn/cm^2).

The results of the foam quality experiments in terms of the expansion ratio, 25 percent solution drainage time and foam viscosity (1,800 gallons solution per minute at 200 pounds per square inch), are summarized in table 1.

The profiles obtained by plotting the viscosity of protein foam and AFFF as a function of time after formation are presented in figure 7. The slopes of these curves indicate that the approximate rate of increase in foam viscosity for these agents is of the same order of magnitude. This behavior with AFFF is in contrast with that obtained in reference 1 in which there was no significant increase in viscosity with time. The actual significance of foam viscosity in terms of the firefighting effectiveness has not as yet been firmly established for the different types of foam agents.

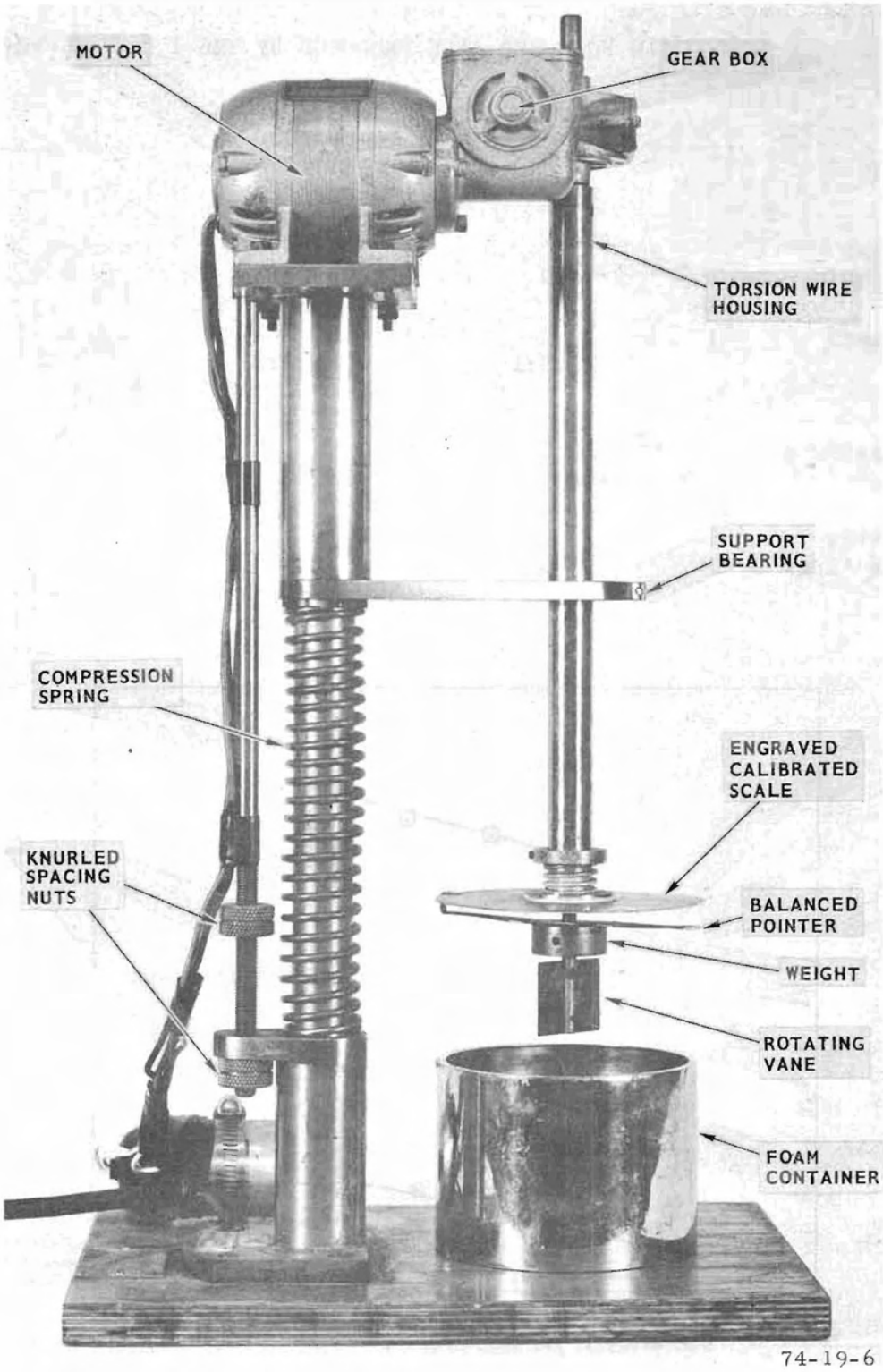

FIGURE 6. FOAM VISCOMETER

TABLE 1. QUALITY OF PROTEIN FOAM AND AFFF PRODUCED BY THE 1,800 GAL/MIN DISPENSING SYSTEM

	Foam Agents	
	AFFF	Protein Foam
Foam Solution Concentration-Percent	6.0	5.7
Foam Expansion Ratio	11.8:1	9.0:1
25 Percent Solution Drainage Time-Second	320	522
Foam Viscosity 120 Seconds After Formation Dynes/cm^2	50	360

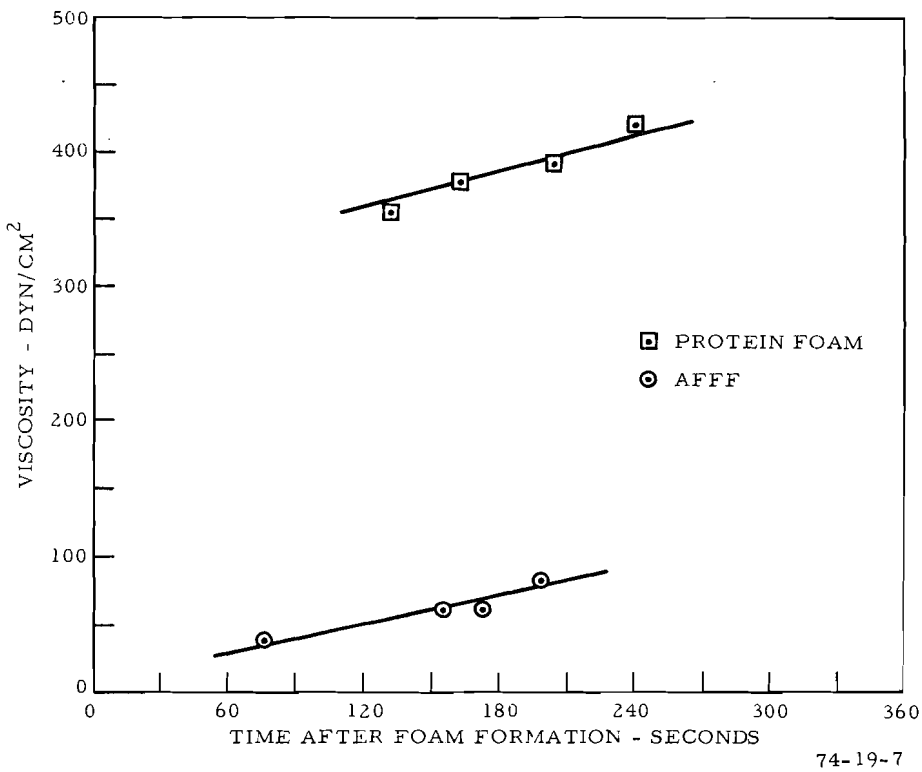

FIGURE 7. VISCOSITY OF PROTEIN FOAM AND AFFF AS A FUNCTION OF THE TIME AFTER FORMATION

FULL-SCALE FIRE-MODELING EXPERIMENTS.

FIRE TEST FACILITY AND TEST METHODS. The fire test bed was constructed to conform in general with that contained in reference 5 which comprised a series of four concentric diked areas which varied from 60 to 214 feet in diameter.

The 60-foot diameter concentric center pool contained a water base jet A fuel fire and an obstacle comprising a cruciform configuration of seven 55-gallon steel drums, which was common to all experiments. A three-dimensional fire was provided in the center of the fire pool to serve as an ignition source for estimating the rate of foam burnback after fire control had been obtained. The three-dimensional fire was sustained by directing a solid stream of fuel (50:50 mixture of jet A and aviation gasoline) which was provided by a 6-gal/min pump through a 1/4-inch-diameter copper tube from a height of 4 feet to the base of the intersecting drums.

During the experiments every effort was made to minimize air pollution insofar as possible. Toward this goal a maximum preburn time of 30 seconds was permitted after the fire pit was completely involved in flames prior to foam discharge.

A burnback test was scheduled as part of each experiment by measuring the time required for the unextinguished three-dimensional fire to progressively increase in size until a heat flux of 0.5 Btu per square foot per second was detected by either one of the two radiometers located around the pool perimeter. The radiometers were elevated on adjustable metal poles 8 feet above ground level on the diameter at right angles to the wind direction and remained in position throughout the test. Thermal data provided by the radiometers were traced by a two-pen potentiometer recorder.

The effectiveness of foam discharge on the 60-foot diameter fire pool during each experiment was measured in terms of the fire control and extinguishing times. In these experiments the fire control time is defined as the elapsed time between the initiation of the extinguishing operation to that time when the heat flux, as measured by the radiometers, was reduced to 0.20 Btu per square foot per second or when 90 percent of the area to be secured was covered by foam. The fire extinguishing time is the total elapsed time from the start of foam discharge until all flames are extinguished and foam application ceases.

A description of the instrumentation employed to monitor the full-scale fire-modeling experiments is contained in appendix C.

The protein foam and AFFF liquid concentrates were of the 6 percent type requiring that they be proportioned with water to make a 6-percent concentration by volume. The actual solution concentration produced by the round-the-pump liquid induction system using each agent was determined by means of a hand refractometer (reference 4). The refractometer measures the refractive index of the solution that drains from the foam which is proportional to the concentration. The solution concentration obtained by this means for each agent is included in table 1.

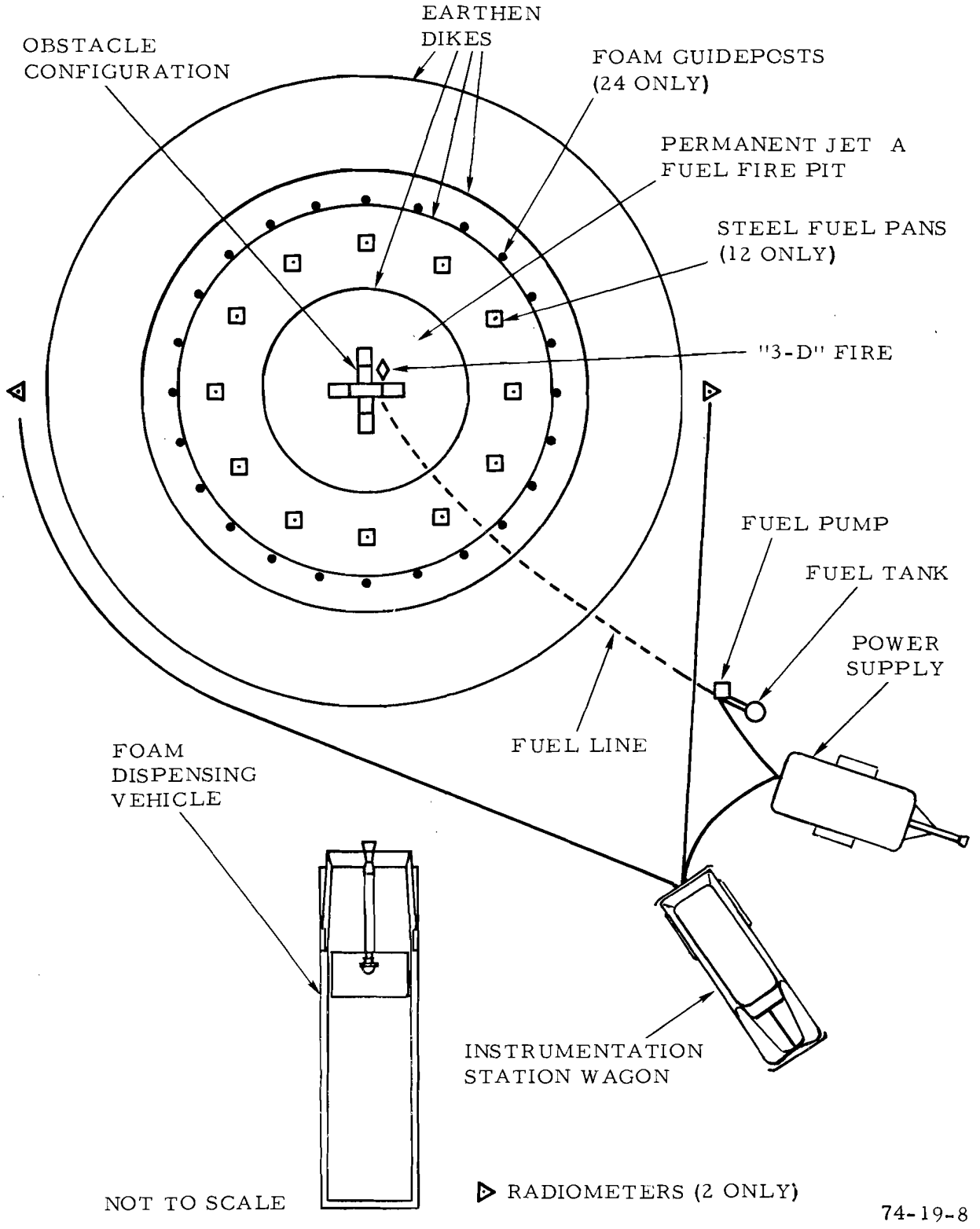

FIGURE 8. PLAN VIEW OF THE FIRE TEST BED

ESTIMATION OF FIRE CONTROL TIMES FOR PROTEIN FOAM AND AFFF BY MAINTAINING A FIXED-FIRE SIZE AND VARYING THE AREA OF FOAM APPLICATION. A series of six experiments was conducted (three with protein foam and three with AFFF) under ambient environmental conditions at Boston-Logan International Airport. The tests were designed to dispense foam solution at a fixed rate in simulated full-scale fire-modeling experiments in which the fire area was smaller than the total area of foam application, thereby conserving fuel and reducing atmospheric contamination. The adequacy of this technique for estimating the fire control time for agents applied at different solution application rates by experienced monitor operators was established in reference 5.

The tests were performed by discharging protein foam and AFFF at a fixed rate of 1,800 gal/min on a test bed comprising a 2,827-square-foot circular water base jet A fuel fire positioned concentrically in diked areas of 12,000, 18,000, and 36,000 square feet. A plan and pictorial view of the fire test bed is presented in figures 8 and 9. The area of foam application in these illustrations is indicated by the circle with the foam guide posts around its circumference (12,000 square feet) and the fire area by the smaller inscribed circle (2,827 square feet) containing the obstacle and three-dimensional fire.

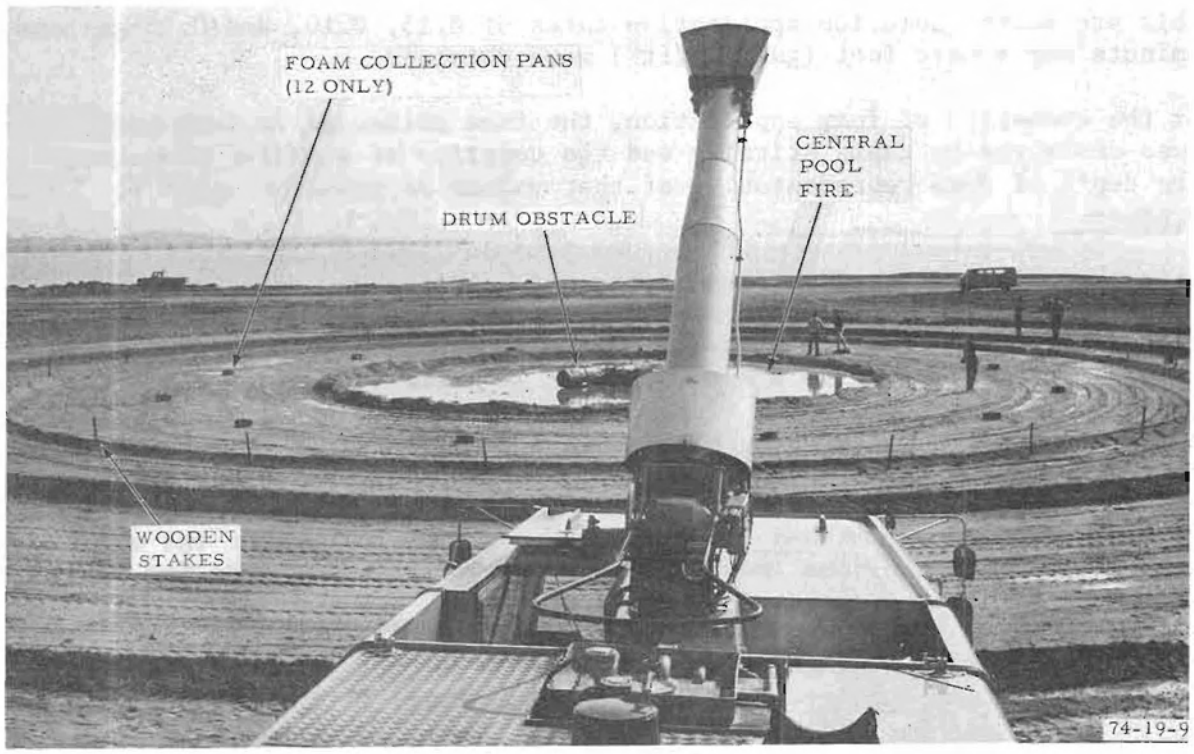

FIGURE 9. PICTORIAL VIEW OF THE FIRE TEST BED

The technique employed to simulate fire control and extinguishment was to apply foam over the entire selected area (either 12,000, 18,000, or 36,000 square feet) including the fire pit, starting with the upwind edge of the diked area and proceeding outward with a uniform side-to-side motion giving particular attention to building up as uniform a foam blanket as possible over the entire area.

As an aid in determining the adequacy of the foam-dispensing technique in establishing a uniform foam blanket after each experiment, the test bed was provided with 12 one-foot-square steel pans (figure 9) distributed within the fire-free area bound by the outside rim of the fire and the concentric dike defining the maximum limit of foam application.

The experiments were conducted by charging the center fire pit (2,827 square feet) with 1,000 gallons of jet A fuel and each of the satellite pans with a 50:50 mixture of jet A and aviation gasoline which provided a readily ignitable mixture. All of the pans were ignited prior to torching the central fire pit. After the center fire pit was completely enveloped in flame, an attempt was made to extinguish all fires by applying the selected foam over total areas of 12,000, 18,000, and 36,000 square feet in successive experiments.

By this procedure, solution application rates of 0.15, 0.10, and 0.05 gallons per minute per square foot (gal/min/ft^2) were obtained.

After the cessation of foam application, the foam collected in each satellite pan was destroyed by rapid stirring and the quantity of solution measured so the depth of foam representative of that volume of solution could be determined.

Protein Foam Tests. The first test in the series was performed with protein foam at a designed solution application rate of 0.15 gal/min/ft^2 and conducted by an operator positioned on the monitor platform using the hand-operated mechanical override system. Figure 10 shows the relative position of the turret operator, central fire pit, satellite fuel pans, and the foam guideposts during the fire preburn period for the first test. In this experiment the foam shapers were closed approximately 40 percent of the straight-stream requirement in an effort to provide the most effective foam distribution pattern. The shapers remained fixed in this position throughout the experiment because there was ample foam reach and no provision had been made for their control by the turret operator in the override mode.

Foam was applied over the diked area for 45 seconds which resulted in a solution application density of 0.132 gal/ft^2 over the area covered.

The actual area of foam coverage of the 12,000-square-foot pit is indicated in figure 11. This diagram indicates that approximately 85.2 percent of the total area was covered by foam at the conclusion of the test. This was 4.8 percent less than that established for fire control which was 90 percent of the total area of foam application.

FIGURE 10. VIEW OF THE FIRE TEST BED DURING THE FIRE PREBURN PERIOD

FAA WJH Technical Center
00090810

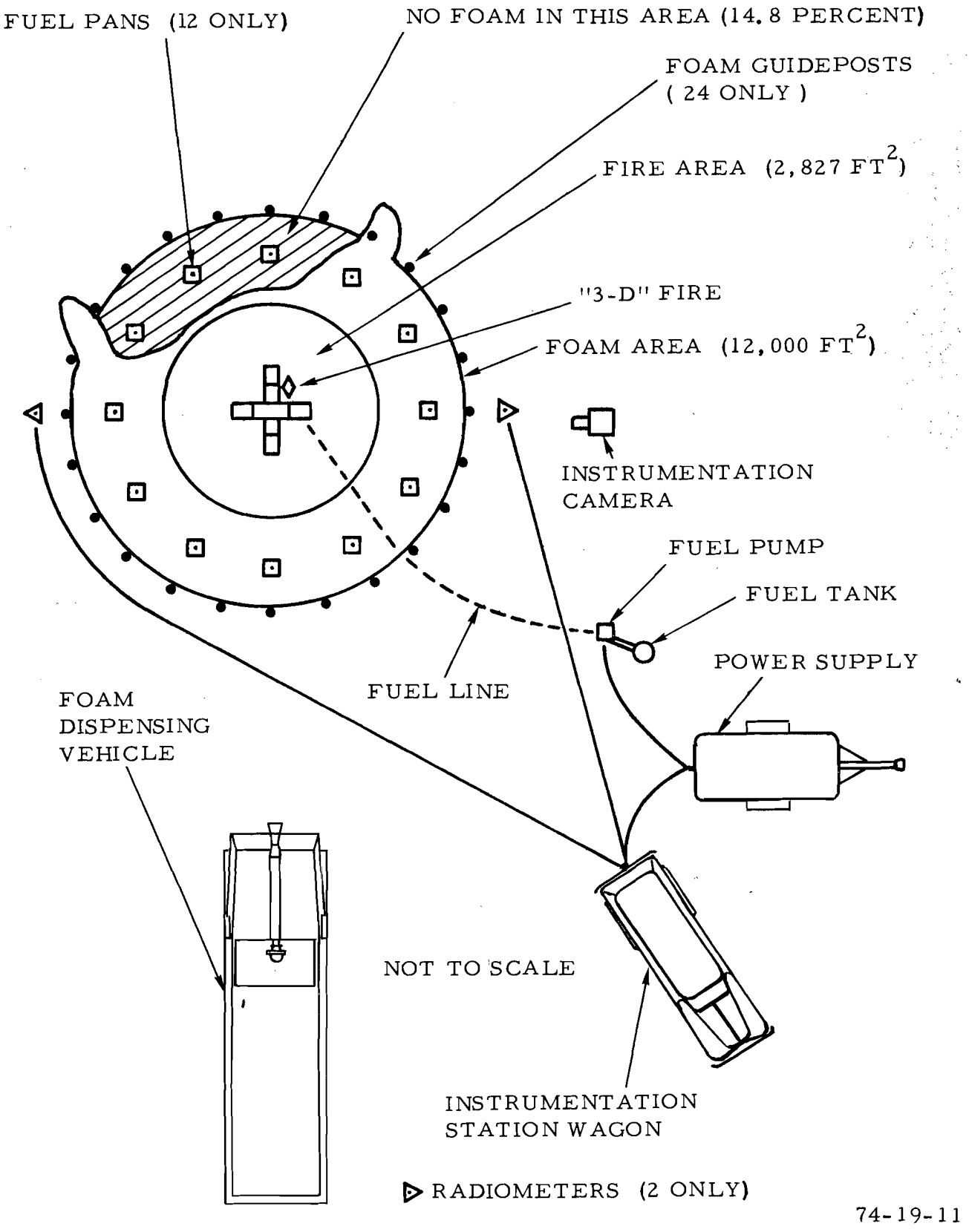

FIGURE 11. TEST 1 - CONFIGURATION OF THE FIRE TEST BED AND THE AREA OF PROTEIN FOAM COVERAGE

The estimated average foam depth was approximately 1.99 inches which is in good agreement with the minimum depth of 2.0 inches for protein foam established in reference 3 to provide adequate fuel (automotive gasoline) vapor securing for a period of 15 minutes. The failure to cover the entire diked area with foam is attributed in part to the inexperience of the monitor operator in the use of the equipment, since it was his first experiment, the resistance of the monitor to rapid lateral and vertical motion, the visual difficulty inherent in following the precise area of foam coverage with the dispersed foam pattern and the relatively high solution application rate.

During the course of foam discharge in the first experiment, the central fire pit (2,827 square feet) was controlled in 29 seconds and extinguished in 41 seconds.

The second test in the protein foam series was also performed from the monitor platform using the manual override system. Figure 12 indicates the relative positions of the foam-dispensing nozzle, central fire pit, satellite fuel pans, and the foam guideposts. In this experiment the foam pattern shapers were controlled by a firefighter positioned at the nozzle console to change the foam pattern at the discretion of the nozzle operator.

Approximately 100 percent of the 18,000-square-foot diked area indicated in figure 12 was covered by foam within 46 seconds after the start of foam discharge. The central fire pit (2,827 square feet) was brought under control within 28 seconds and extinguished in 39 seconds. In this experiment the designed foam solution application rate was 0.10 gal/min/ft^2 and the actual solution application density was 0.077 gallons per square foot. The calculated average foam depth over the area covered, including the satellite fuel pans which were extinguished, was 1.11 inches. The increase in foam-dispensing effectiveness achieved in the second test over that obtained in the first is attributed primarily to increased familiarization of the operator in the use of the equipment and the greater visibility in applying foam within the diked area through the use of the variable foam stream over the fixed dispersed foam pattern.

The third experiment with protein foam was conducted by the operator from the monitor platform using the electro-pneumatic monitor control shown in figure 1-A. The schematic drawing presented in figure 13 indicates the relative position of the foam nozzle, central fire pit, satellite fuel pans, and the foam guideposts. In this experiment the foam stream was varied at the discretion of the nozzle operator to obtain the most complete and rapid coverage of the area of application.

Approximately 76.4 percent of the 36,000-square-foot diked area indicated in figure 13 was covered by foam within 107 seconds after the start of foam discharge. During this period of discharge the central fire pit (2,827 square feet) was controlled in 44 seconds and extinguished in 62 seconds. The designed solution application rate was 0.05 gal/min/ft^2 and the actual application density was 0.117 gal/ft^2. The estimated average foam depth over the area of application and in those satellite fuel pans which were extinguished was 1.68 inches.

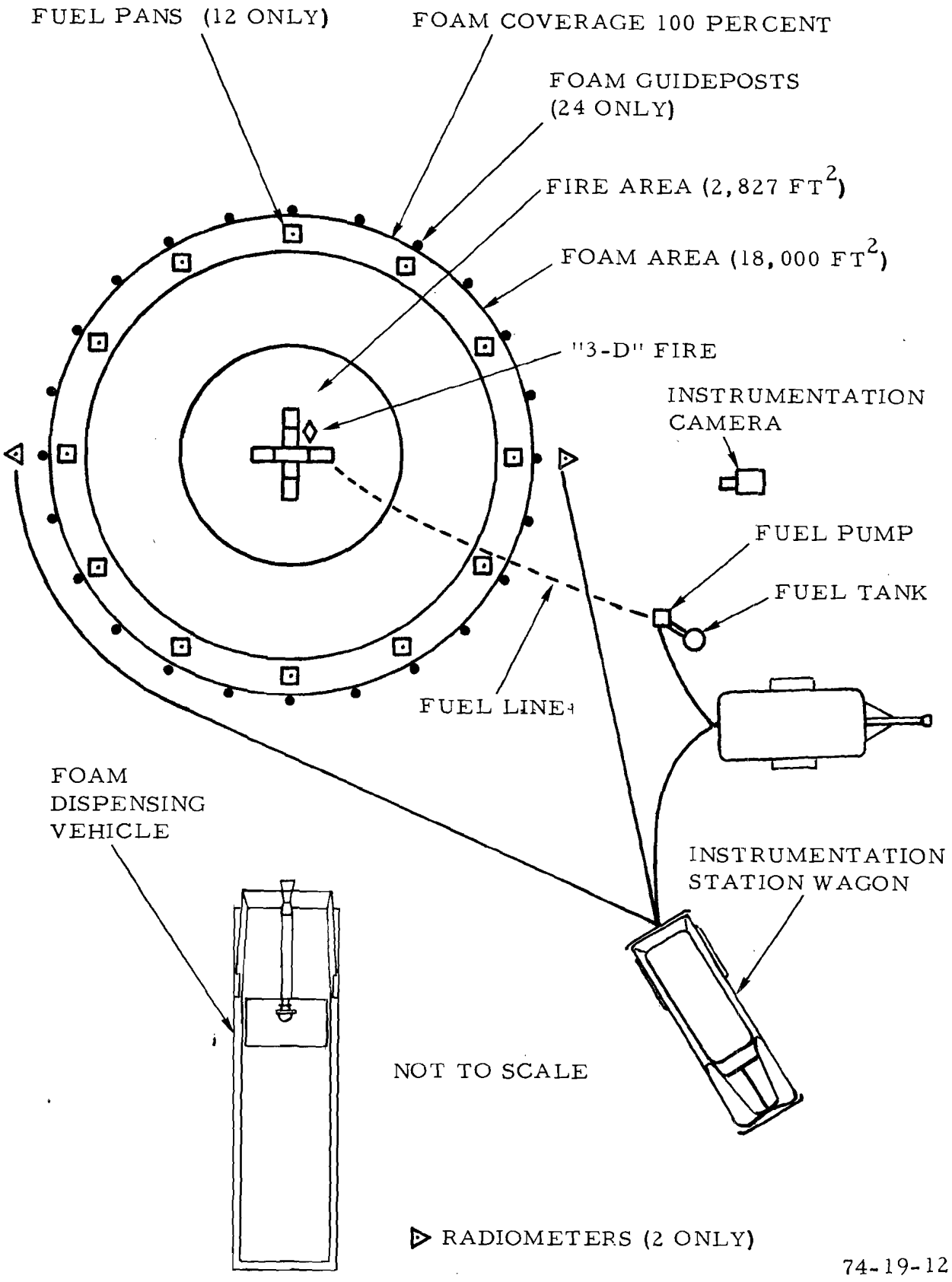

FIGURE 12. TEST 2 - CONFIGURATION OF THE FIRE TEST BED AND THE AREA OF PROTEIN FOAM COVERAGE

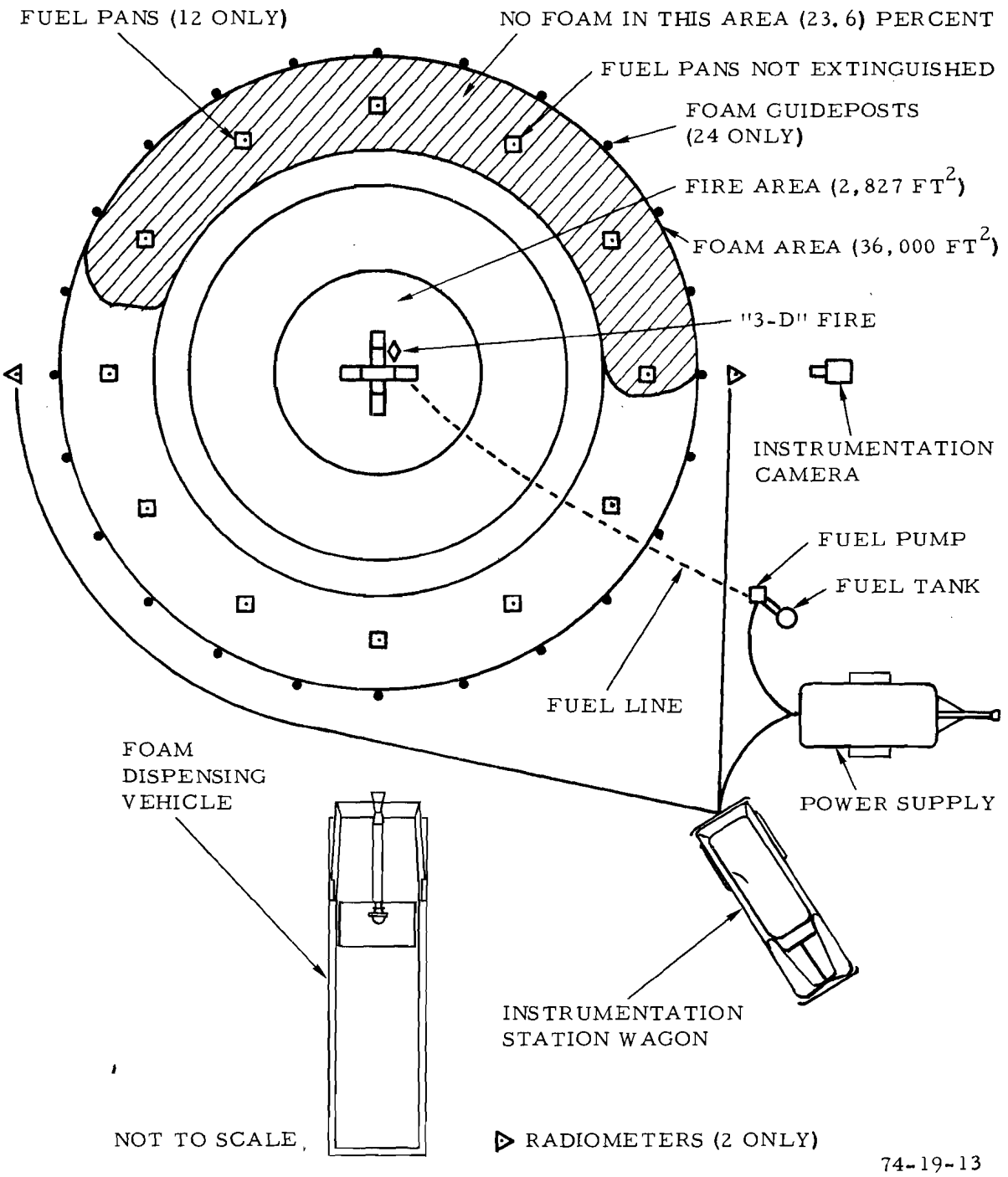

FIGURE 13. TEST 3 - CONFIGURATION OF THE FIRE TEST BED AND THE AREA OF PROTEIN FOAM COVERAGE

The lack of foam coverage on the far downwind side of the pit was attributed in part to impaired visibility through and around the foam stream and the absence of any positive means of estimating the angle of elevation of the nozzle to achieve maximum foam range. It is speculated that one way of circumventing this handicap would be to provide the operator with a means of determining the angle of elevation of the nozzle and the associated foam discharge range.

Because of equipment malfunctioning, the radiometer fire-monitoring system was operational only during test 1. The fire preburn, control and extinguishing times for subsequent tests were determined by means of a stopwatch and from an analysis of the instrumentation camera films.

The failure of the thermal recording system and the necessity to minimize atmospheric contamination required the deletion of the burnback test after the first experiment.

AFFF Tests. A series of three sequential experiments was performed with AFFF using the same test bed conditions as those employed with protein foam with the exceptions that neither the radiometer monitoring system nor the satellite fuel pans were used. The AFFF test sequence was initiated by charging the center fire pit (2,827 square feet) with 1,000 gallons of jet A fuel. After the first experiment, each succeeding test was started by applying foam to the selected diked area after the foam from the preceding experiment had been completely burned off the central fire pit. This testing technique was required to minimize air contamination in polution-sensitive areas because of the adverse wind direction.

The first experiment in the AFFF series (test 4), was performed by the operator from the monitor platform using the hand-operated mechanical override system. Figure 14 indicates the relative positions of the foam-dispensing system operator, central fire pit, satellite fuel pans, and the foam guideposts. The nozzle foam shapers were maintained in the fully extended position during this experiment which provided a solid stream discharge.

At the conclusion of a 51-second preburn period, which was the time required for complete flame involvement of the central fire pit, AFFF was applied at the rate of 0.15 gal/min/ft^2. Foam discharge was continued over the 12,000-square-foot area until the operator estimated that 90 percent had been covered by approximately 2 inches of foam. The total foam discharge required 30 seconds during which time approximately 75 percent of the total area had been covered by foam as indicated in figure 14.

During foam application the central fire pit was controlled in 17 seconds and extinguished in 27 seconds except for the small three-dimensional fire over the drum obstacle in the center of the pit. The overall foam blanket was estimated to vary in depth from 1.5 to 1.7 inches. The estimated actual foam application density in this experiment was 0.10 gal/ft^2 over the area covered, which is in general agreement with values obtained for pool fires of equivalent area (reference 1).

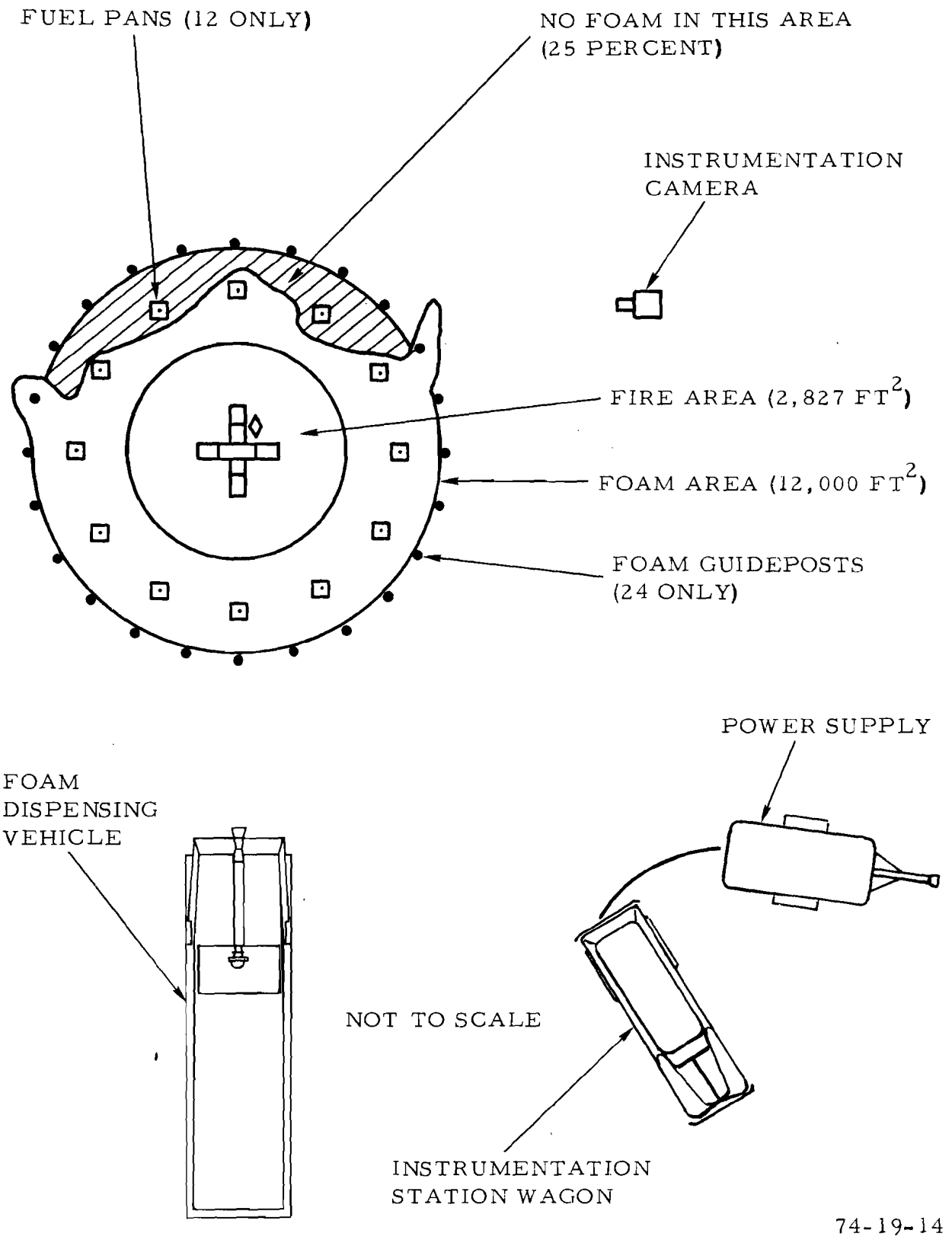

FIGURE 14. TEST 4 - CONFIGURATION OF THE FIRE TEST BED AND THE AREA OF AFFF COVERAGE

During the course of this experiment samples were taken to determine AFFF quality in terms of expansion ratio and 25 percent solution drainage time and the values obtained are presented in table 1.

The second experiment in the AFFF series (test 5) was conducted by the operator from the monitor platform using the hand-operated mechanical override system. Figure 15 indicates the relative positions of the foam-dispensing system and fire pits. The nozzle foam shapers were adjusted to provide a solid stream discharge during the entire discharge period.

The experiment was begun after the foam had completely burned from the central fire pit and the bulk of the surrounding foam on the ground had been destroyed by the thermal radiation. AFFF was applied over the 18,000-square-foot area at the designed rate of 0.10 gal/min/ft^2 over a period of 36 seconds. This discharge time was estimated by the operator to be required to cover 90 percent of the diked area to a depth of 2 inches with foam.

At the conclusion of foam application approximately 79 percent of the 18,000-square-foot diked area indicated in figure 15 was covered by foam to a depth of approximately 1.20 inches. The actual estimated foam solution application density over the area covered was 0.076 gal/ft^2 which is in nominal conformance with that obtained under full-scale fire test conditions (reference 1).

During the time required for the AFFF to burn off the central fire pit from test 5, the backboard and stand for collecting foam samples (reference 4) was erected within the foam application area. The results of the foam viscosity determinations are presented in figure 7.

The third and final experiment in the AFFF series (test 6) was performed by the operator on the monitor platform using the electro-pneumatic monitor control system from the control panel shown in figure 1A. The schematic drawing shown in figure 16 indicates the relative position of the foam nozzle, central fire pit, and the foam guideposts. The foam stream shapers were variable in this mode of operation, but because of the large area of foam application and the long foam reach required to cover the pit, there was little need to modify the solid foam stream during the discharge period.

After the residual foam from the previous experiment had burned off the central fire pit, foam was applied over the 36,000-square-foot diked area at the designed rate of 0.05 gal/min/ft^2. AFFF was discharged at the discretion of the operator for a period of 73 seconds which was the time judged to be required to obtain 90 percent foam coverage of the 36,000-square-foot diked area. After foam application 85.3 percent of the total area had been covered by AFFF to a depth of approximately 1.10 inches. During foam discharge the central pool fire (2,827 square feet) was brought under control in 22 seconds and extinguished in 34 seconds except for a small three-dimensional fire in the center of the pit. The actual foam solution application density over the area covered was approximately 0.071 gal/ft^2.

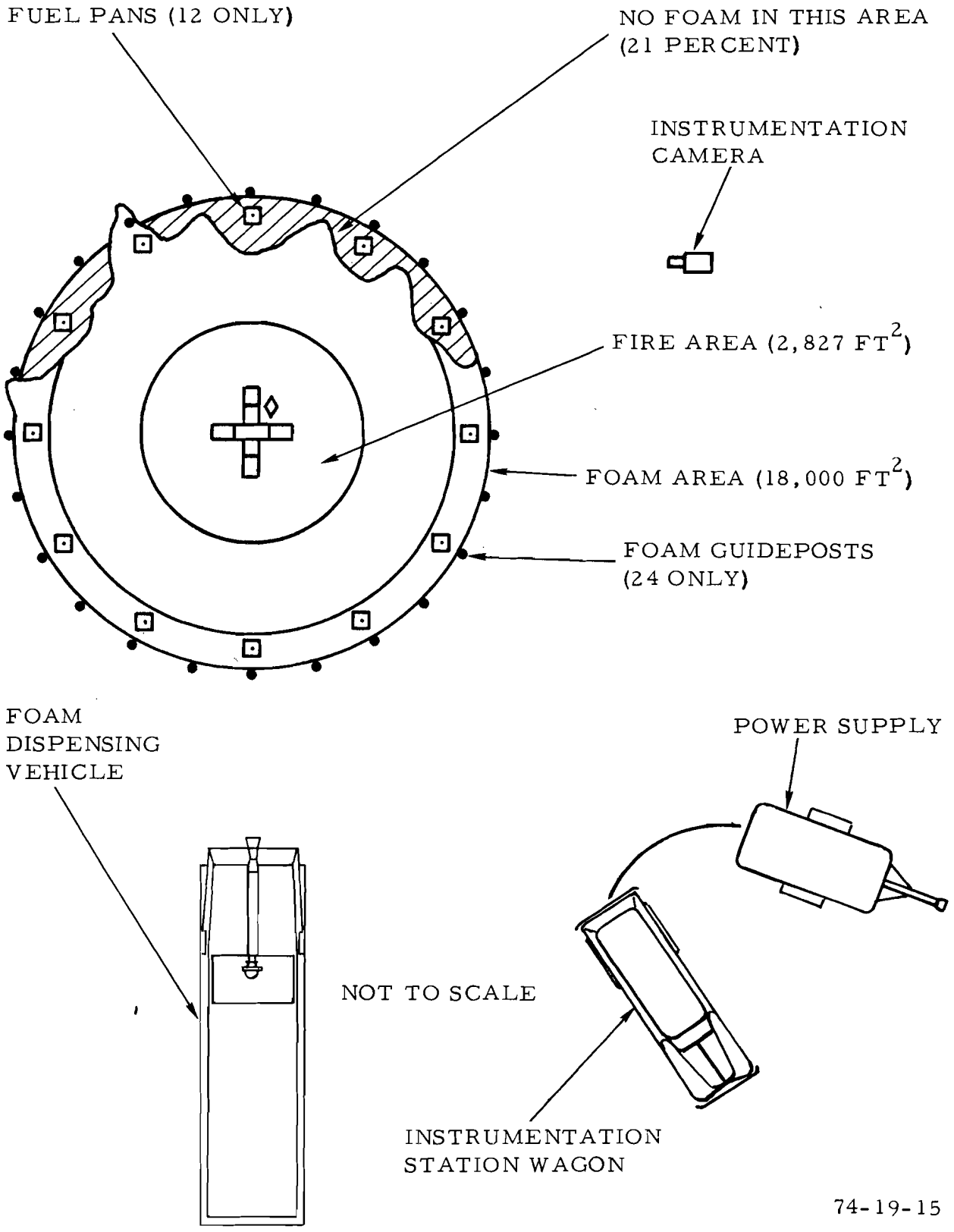

FIGURE 15. TEST 5 - CONFIGURATION OF THE FIRE TEST BED AND THE AREA OF AFFF COVERAGE

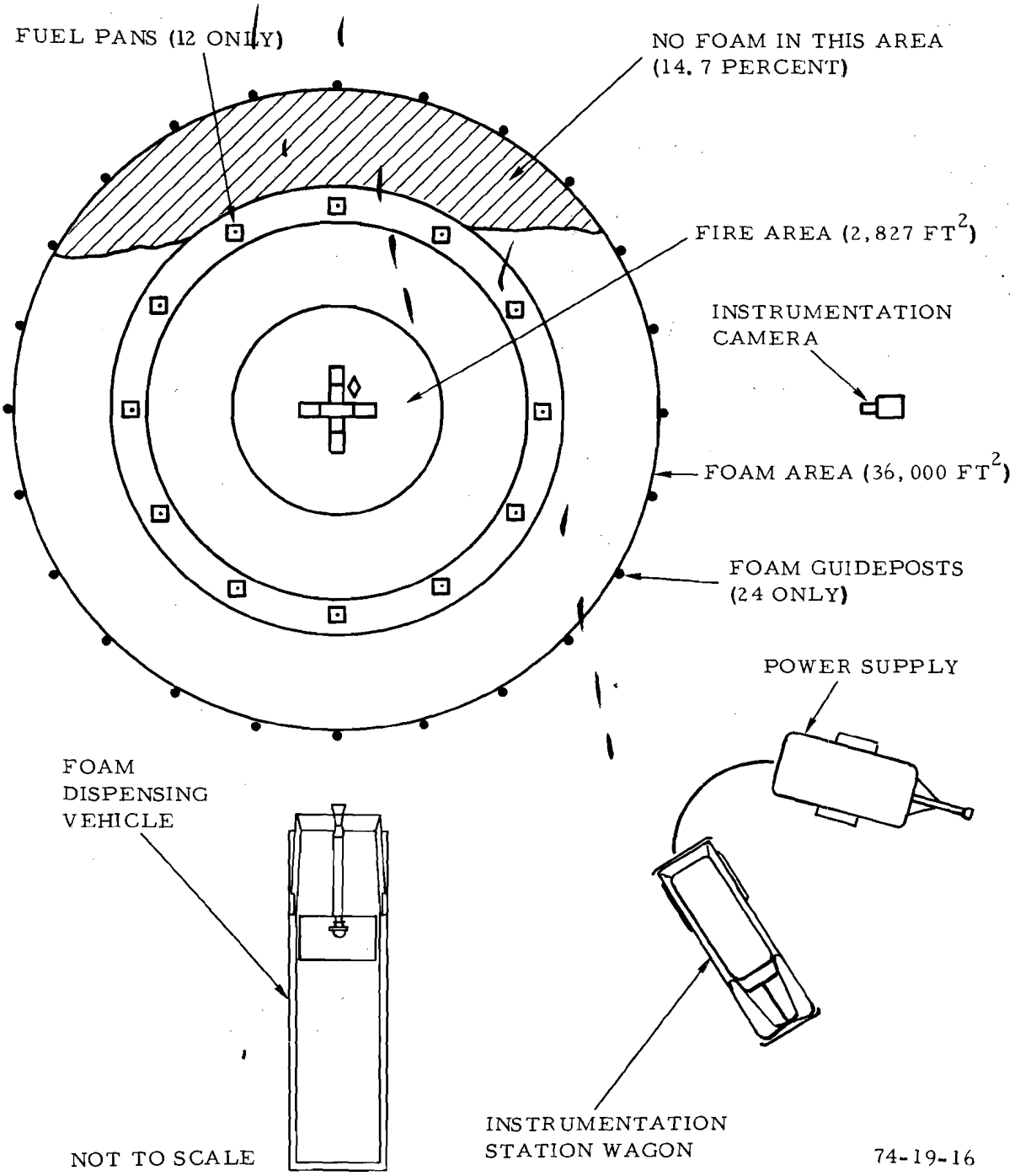

FIGURE 16. TEST 6 - CONFIGURATION OF THE FIRE TEST BED AND THE AREA OF AFFF COVERAGE

The electro-pneumatic monitor system provided adequate control and nozzle response during foam application in this experiment, but limited visibility through the foam of the far rim of the pit resulted in the foam stream falling somewhat short of the outermost dike. Here again, as in test 3, a foam-range finder based on nozzle elevation would probably have been of value to the operator in judging the proper nozzle position needed to reach the most distant area of the pit.

DRIVER/OPERATOR VISIBILITY FROM THE CAB OF THE FIREFIGHTING VEHICLE DURING FOAM DISCHARGE.

The most effective use of a high-capacity foam-dispensing system such as that employed in these experiments requires that all of the available foam solution be dispensed as expeditiously as possible over the fire area. Any time and/or foam solution lost in directing the accurate placement of foam detracts from the overall designed effectiveness of the system. Therefore, to minimize these potential losses, a knowledge of the exact position of the turret nozzle in terms of the azimuth angle and the angle of elevation is necessary for the operator when positioned in the cab of the firefighting vehicle. The horizontal position of the nozzle relative to the centerline of the truck was considered to be more critical than the angle of elevation in conserving time and materials during initial foam discharge.

The normal position for operating the foam nozzle is from the monitor platform according to the equipment manufacturers' literature. However, the nozzle may also be effectively operated from the vehicle driver's control panel which is provided with an azimuth indicator showing the position of the nozzle with regard to the centerline of the truck. Since the monitor is positioned behind the driver's seat, the angular visibility afforded the operator at the maximum angle of rotation was considered significant. Figure 17 indicates the approximate angle of visibility from the driver's seat to the point of foam impact for a nozzle elevation of 30°. The sketch shows the wide angle of approach to a fire affording good visibility for the operator. This cab configuration tends to provide maximum flexibility in visually maneuvering the vehicle through the airport operations areas and over difficult and complex terrains when responding to an aircraft accident.

To relate the measured angles of sight, shown in figure 17, with the actual visibility afforded the driver/operator positioned in the center of the cab of the foam-dispensing truck, a series of photographs was taken using the camera described in reference 7. Figure 18A shows a panoramic view of a portion of an airport encompassing an azimuth angle of 255°. In this photograph the lens of the camera was focused on the wing root of a Boeing 707 aircraft located 300 feet from the driver's seat in the cab of the foam-dispensing vehicle. The horizontal and vertical grid structure superimposed over the photograph is in increments of 5° and is used to measure the angles of visibility.

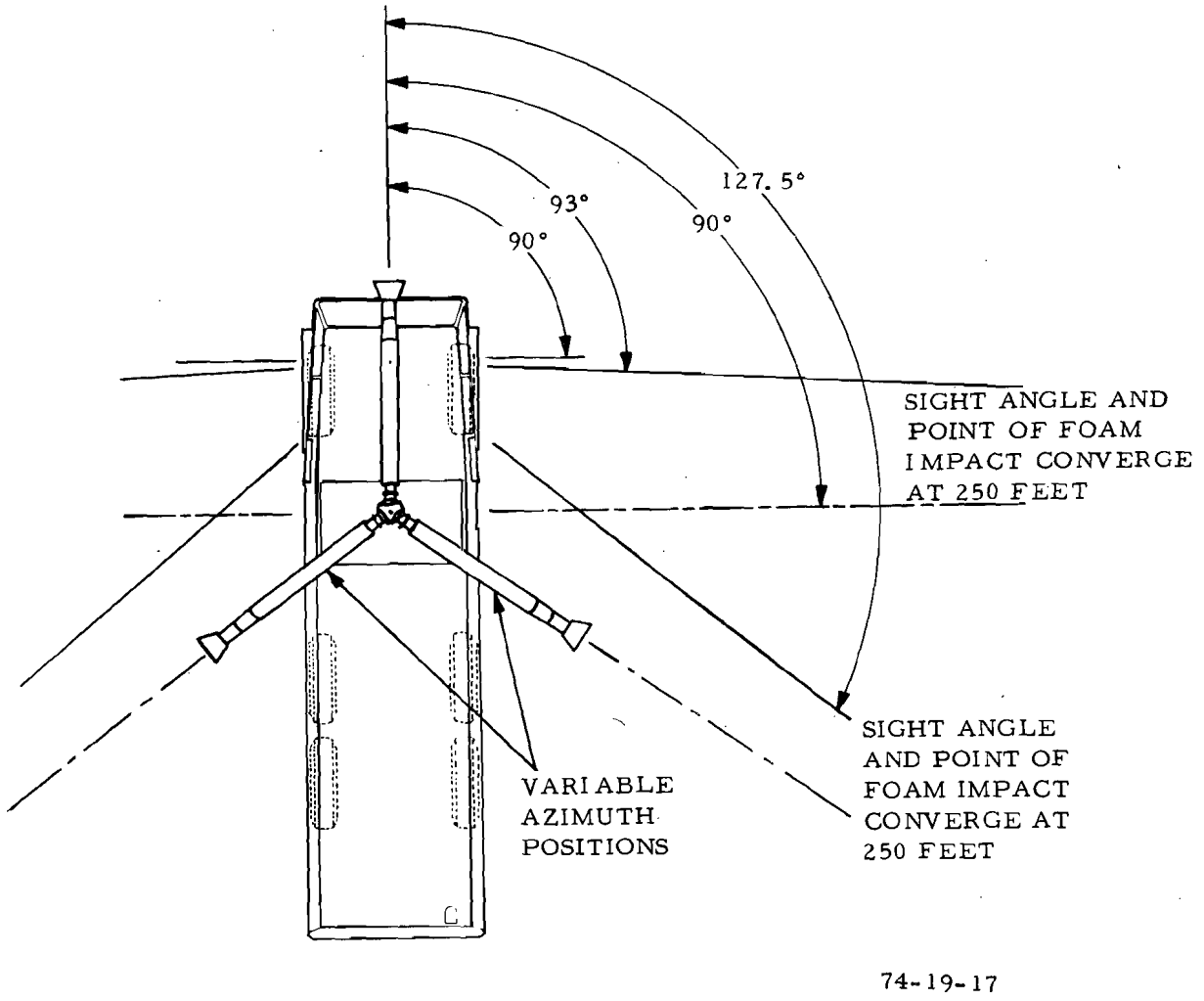

FIGURE 17. APPROXIMATE VISUAL ANGLES OF REMOTE NOZZLE OPERATION FROM WITHIN THE CAB OF THE "PATHFINDER" AIRPORT CRASH TRUCK

The photograph shown in figure 18B is a composite panoramic view taken from the same position as that presented in figure 18A.

From figures 17 and 18A it is apparent that the azimuth angle of visibility from the driver/operator's seat at the foam nozzle console permits the accurate dispensing of foam through an angle of 127.5° on either side of the centerline of the vehicle.

RESULTS OF THE SIMULATED FULL-SCALE FIRE TESTS.

The environmental conditions and test results obtained during the simulated full-scale fire-modeling experiments using protein foam and AFFF are summarized in table 2.

The profiles in figure 19 show the foam discharge (simulated fire control) time as a function of the foam solution application rate. The solid line profiles indicate that more rapid coverage of the area of foam application was obtained using AFFF than protein foam. The superimposed dashed line profiles are included for reference and were derived from reference 1 in which protein foam and AFFF were evaluated in full-scale fire-modeling experiments using a solution discharge rate of 1,000 gal/min which was the highest rate then available from a single turret nozzle. Although these curves are not directly comparable with those obtained at 1,800 gal/min in these simulated tests, the data does suggest the use of an area of foam application larger than the actual fire area for training and equipment evaluation.

A comparison of the profiles (figure 19) developed for protein foam at discharge rates of 1,000 gal/min (reference 1) and 1,800 gal/min indicates that at solution application rates above 0.08 gal/min/ft^2 the higher discharge is somewhat more effective. Although the profiles for AFFF under the same test conditions are quite similar, there is also evidence indicating that at solution application rates above 0.11 gal/min/ft^2 where these curves intersect, there was a small reduction in the foam discharge (simulated fire control) time required to obtain area coverage at the higher discharge rate. These data tend to indicate that foam application (fire control) times may be somewhat reduced by an increase in the foam solution discharge rate from a single nozzle.

The time to control the central fire pit during the course of foam application is indicated by the profiles presented in figure 20. The significance of these data is that they provide a means for comparing the relative firefighting effectiveness of protein foam and AFFF and a measure of the efficiency of foam distribution over the diked area.

From the data presented in table 2 it is apparent that the fire control time using protein foam at 0.10 gal/min/ft^2 was 28 seconds, which was somewhat less than would have been anticipated from the control times obtained at solution application rates of 0.05 and 0.15 gal/min/ft^2. This lower fire control time is attributed in part to the increased effectiveness of the foam distributing technique, in this experiment, as evidenced by the complete foam coverage of the area (18,000 sq ft) of foam application.

TABLE 2. SUMMARY OF TEST RESULTS USING PROTEIN FOAM AND AFFF

TEST PARAMETERS	FOAM AGENTS: PROTEIN FOAM TESTS			AFFF TESTS			COMMENTS
	1	2	3	4	5	6	
Wind Velocity - Knots	8-10	6-7	7-8	12-15	12-15	12-15	Occasional Gusts to 20 Knots
Air Temperature - °F	74	76	74	70	70	68	
Foam Solution Temperature - °F	72	72	70	65	68	64	
Fire Type - Water Base	Yes	Yes	Yes	Yes	Yes	Yes	
Fuel Type - Jet A	Yes	Yes	Yes	Yes	Yes	Yes	
Fuel Quantity - Gallons	1,000	1,000	700	1,000	850	700	Tests 5 and 6 Estimated
Fire Area - Square Feet	2,827	2,827	2,827	2,827	2,827	2,827	
Foam Area - Square Feet	12,000	18,000	36,000	12,000	18,000	36,000	
Foam Solution Discharge Pressure-lbf/in^2	200	200	200	200	200	200	
Foam Solution Discharge Rate - gal/min	1,800	1,800	1,800	1,800	1,800	1,800	
Foam Solution Application Rate-gal/min/ft^2	0.15	0.10	0.05	0.15	0.10	0.05	
Fire Preburn Time - Sec	110	102	118	51	Burnback From Test 4	Burnback From Test 5	
Fire Control Time - Sec (2827 ft^2)	29	28	44	17	17	22	
Fire Extinguishing Time-Sec (2827 ft^2)	41	39	62	27	-	34	
Overall Foam Coverage - Percent	85.2	100	76.4	75.0	79.0	85.3	
Total Solution Discharge Time - Sec	45	46	107	30	36	73	*
Estimated Average Foam Depth - Inches	1.99	1.11	1.68	1.60	1.20	1.10	
Foam Solution Application Density - gal/ft^2	0.132	0.077	0.117	0.100	0.076	0.071	

*Fire control time estimated in terms of solution discharge time.

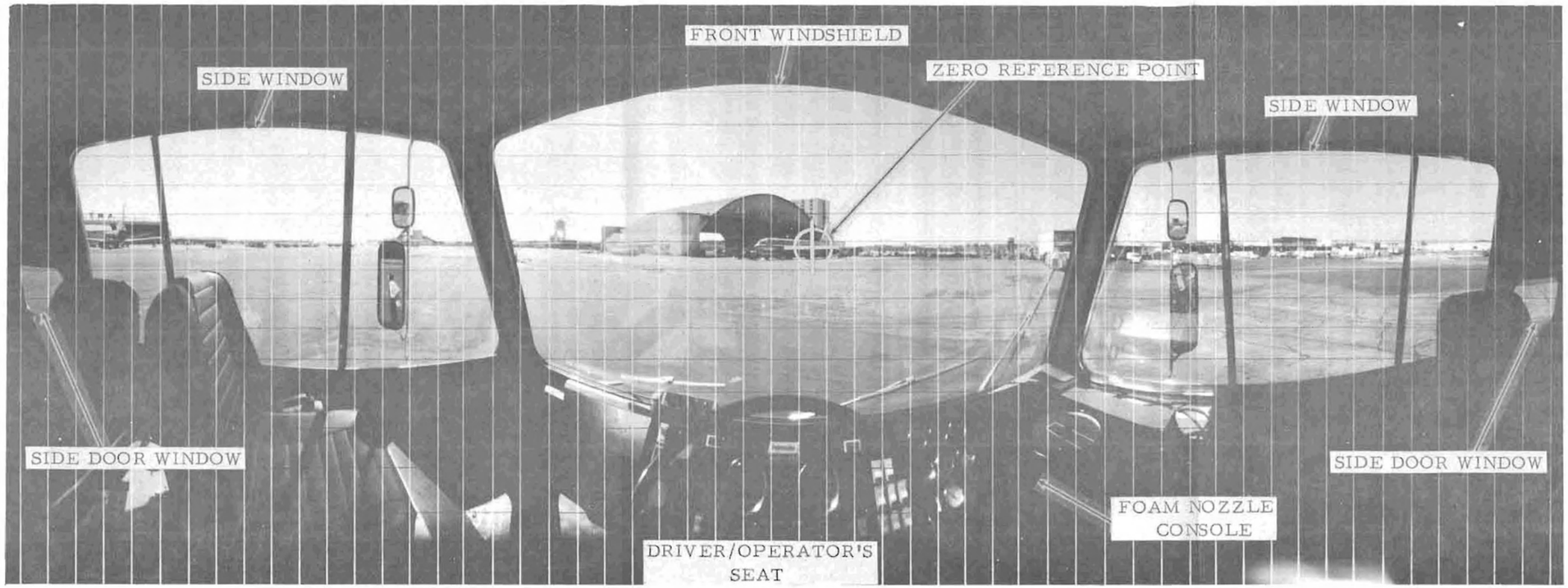

A. VIEW SHOWING THE "TARGET" AIRCRAFT AND GRID OVERLAY IN INCREMENTS OF 5°

B. PANORAMIC VIEW OF THE "TARGET" AIRCRAFT FROM THE DRIVER/OPERATOR'S SEAT

FIGURE 18. PANORAMIC VIEWS FROM THE DRIVER/OPERATOR'S SEAT IN THE FIREFIGHTING VEHICLE SHOWING A "TARGET" AIRCRAFT THROUGH THE CENTER OF THE WINDSHIELD

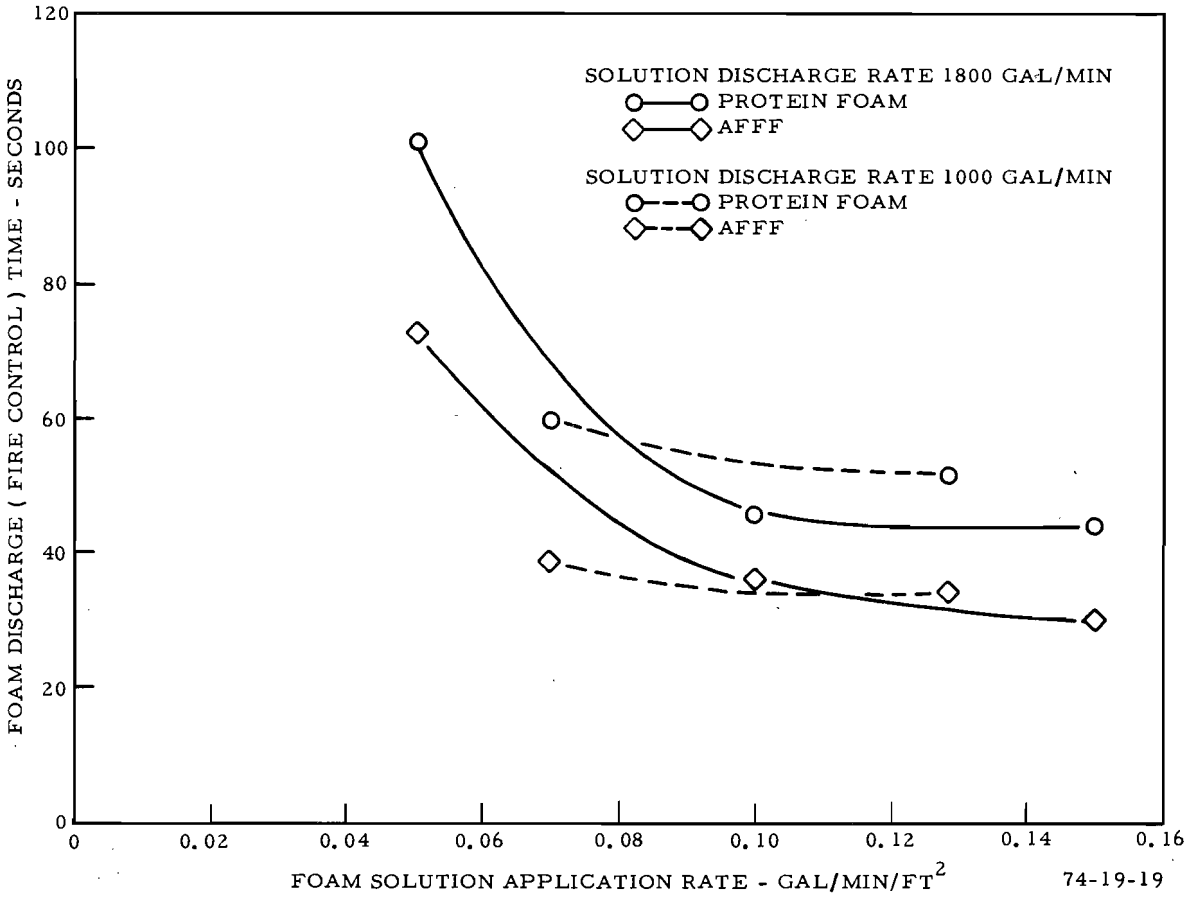

FIGURE 19. FOAM DISCHARGE (FIRE CONTROL) TIME AS A FUNCTION OF THE SOLUTION APPLICATION RATE USING PROTEIN FOAM AND AFFF

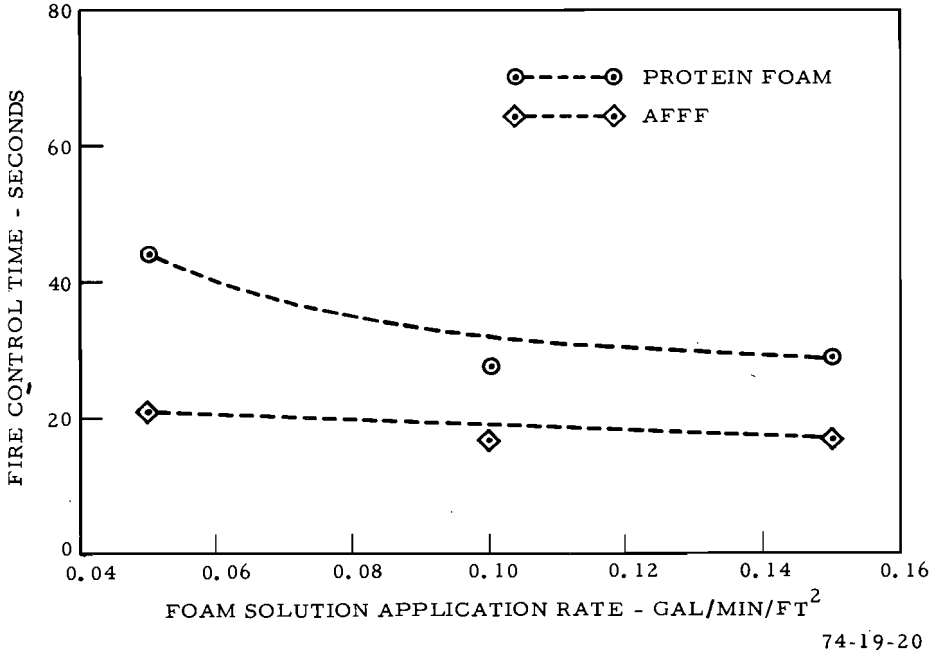

FIGURE 20. FIRE CONTROL TIME OF THE CENTRAL POOL FIRE (2,827 FT^2) AS A FUNCTION OF THE FOAM SOLUTION APPLICATION RATE USING PROTEIN FOAM AND AFFF

Control of the central pool fire using AFFF at 0.10 and 0.15 gal/min/ft^2 was 17 seconds in both experiments while the fire control times for all three tests varied by only 5 seconds. These data tend to reflect the effectiveness of the AFFF stream and the rapid coverage of the fuel surface.

The relative firefighting effectiveness of different foam solution discharge rates is of interest from both the technological and economic aspects. From the information provided in reference 8, 3,000 gallons of water/foam solution discharged at 800 gal/min from one foam truck was found adequate for controlling fires in critical access areas of a C-97 transport category aircraft under severe fuel spill fire conditions. However, at the solution rate employed, the time to control the fire was 140 seconds, which was greatly in excess of the time required for the destruction of an aircraft skin which was reported to be approximately 40 seconds in reference 9. This suggests a need for adequate solution discharge rates to protect the integrity of the fuselage and to maintain a survivable passenger environment using a minimum of manpower and equipment. One method of achieving this objective in part, would be to increase the foam solution discharge rate of major foam firefighting vehicles within reasonaable economic limits without increasing the manpower requirements.

The increased effectiveness of AFFF shown in these experiments over protein foam in terms of foam discharge (simulated fire control) time as a function of the solution application rate is in general agreement with the data presented in reference 1 employing full-scale fire-test procedures. Therefore, it is speculated that the greater firefighting effectiveness demonstrated by AFFF may lie in part in its greater ease of distribution over the area of foam application.

The average depth of foam over the area of application is presented in table 2 for each test. The foam depth varied from 1.99 to 1.11 inches within the protein foam series during tests 1 and 2. In general the protein foam solution application density, foam depth, and the total area of foam coverage were random by comparison with the data obtained using AFFF.

The effective foam coverage obtained with AFFF (figure 21) increased with the area of application, while the foam solution application density as well as the average foam depth decreased which is consistent with the trend shown during an extensive series of full-scale fire modeling experiments reported in references 1 and 6.

In all experiments there was an appreciable build-up of foam on the immediate upwind side of the cruciform drum configuration in the center of the fire pool. The largest accumulation was observed in test 3 with protein foam because of the greater number of foam traverses required to cover the diked area in this experiment. This foam accumulation was not considered when measurements were taken to estimate the average foam depth over the diked areas since no safe means was available to approach the drum configuration due to its close proximity to the three-dimensional fire.

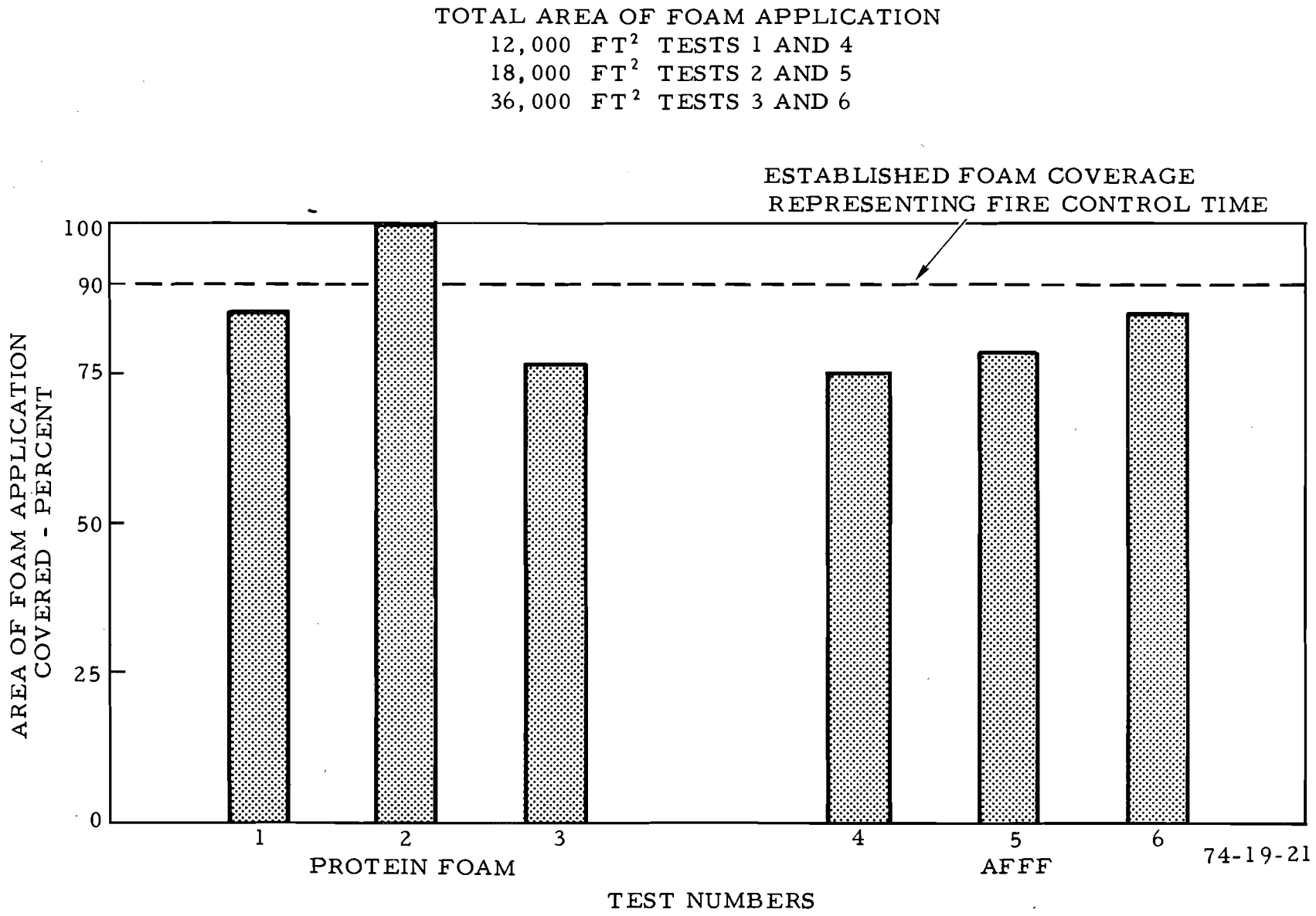

FIGURE 21. ACTUAL AREA COVERED BY FOAM AS A PERCENTAGE OF THE TOTAL AREA OF FOAM APPLICATION

SUMMARY OF RESULTS

The results obtained from the foam quality determinations and the simulated full-scale fire modeling experiments using protein foam and AFFF at different solution application rates are:

1. The protein foam produced by the 1,800 gal/min foam-dispensing system had an expansion ratio of 9:1 and a 25 percent solution drainage time of 8.7 minutes. The foam viscosity was 360 dyn/cm^2 120 seconds after formation which increased to 400 dyn/cm^2 after 210 seconds.

2. AFFF discharged at a solution rate of 1,800 gal/min had an expansion ratio of 11.8:1 and a 25 percent solution drainage time of 5.33 minutes. The foam viscosity was 50 dyn/cm^2 110 seconds after formation which increased to 80 dyn/cm^2 after 200 seconds.

3. The ground patterns produced with protein foam at a solution rate of 1,800 gal/min and a pressure of 200 pounds per square inch had a reach of approximately 250 feet and a maximum width of 47 feet using the straight stream while the reach of the fully dispersed pattern was approximately 140 feet and the maximum width 57 feet.

4. AFFF had a reach of approximately 255 feet and a maximum width of 50 feet, using the straight stream, at a solution rate of 1,800 gal/min and a pressure of 200 pounds per square inch; while the fully dispersed pattern had a reach of approximately 160 feet and a width of 62 feet under the same conditions.

5. The estimated (simulated fire control) times required to obtain 90 percent coverage of the area of foam application using protein foam and AFFF at application rates of 0.05, 0.10, and 0.15 gal/min/ft^2 using a solution discharge rate of 1,800 gal/min provided a means for estimating the performance and operational characteristics of the dispensing equipment.

6. The electro-pneumatic monitor system was capable of providing adequate horizontal and vertical control of the nozzle during foam discharge from both the cab and monitor platform of the vehicle.

7. The manual foam monitor override system was effective in dispensing foam over the simulated fuel-spill areas, but considerable physical effort was required to provide adequate mobility and response.

8. The driver/operator position in the forward center of the cab of the "Pathfinder" vehicle provided an effective viewing azimuth angle of approximately 255°.

9. Maximum effectiveness was obtained in dispensing foam on the extreme downwind side of the diked area in only one experiment, because of limited visibility through the foam stream and the inability of the operator to estimate the optimum angle (30°) of nozzle elevation to obtain adequate foam reach.

CONCLUSIONS

Based upon the results of the foam quality tests and the simulated full-scale fire-modeling experiments, it is concluded that:

1. The quality of protein foam and AFFF produced by the 1,800 gal/min foam discharge in terms of the expansion ratio, 25 percent solution drainage time and foam viscosity was in nominal conformance with that determined to be effective (reference 1) in combatting large aircraft-fuel spill fires.

2. The foam ground patterns produced by protein foam and AFFF using a solution discharge rate of 1,800 gal/min provided adequate reach and width to cover each of the concentric simulated fuel-spill areas.

3. The hydraulically operated electro-pneumatic selection valve system provided adequate response and control for accurate foam application over the simulated fuel-spill area.

4. The application of protein foam and AFFF over diked areas larger than the fire area is economical of fuel and more ecologically acceptable for estimating the fire control times of large simulated fuel-spill fires than the use of completely flooded fuel areas.

5. The location of the driver/operator in the forward center of the cab of the "Pathfinder" vehicle provides a clear view for dispensing foam and maneuvering in congested airport operational areas and over difficult terrain.

6. To assure maximum range during foam discharge a knowledge of nozzle elevation is required.

RECOMMENDATIONS

Based upon the results of the foam quality, foam ground patterns and the simulated full-scale fire-modeling experiments, it is recommended that:

1. The quality of protein foam and AFFF produced by high-capacity airport firefighting equipment be evaluated in terms of the expansion ratio and 25 percent solution drainage time in accordance with the methods (reference 4) employed in this effort.

2. Studies be conducted and/or continued by investigators in an effort to determine the effect, if any, of foam viscosity on the control and extinquishing times of large simulated aircraft fuel spill fires.

3. Foam ground patterns be determined for dispensing equipment employing the straight and fully dispersed streams in accordance with the method employed in this evaluation using the procedure contained in reference 4.

4. Fire control times be estimated and foam application techniques be evaluated for high-capacity airport foam discharge equipment by dispensing foam over a larger area than the actual fire area to conserve fuel and minimize environmental contamination.

5. A means be provided the nozzle operator indicating the optimum angle (30°) of elevation from the horizontal to obtain the maximum foam/water discharge range.

REFERENCES

1. Geyer, George B., Evaluation of Aircraft Ground Firefighting Agents and Techniques, National Aviation Facilities Experimental Center, Atlantic City, N.J., Report No. FAA-RD-71-57, FAA-NA-72-20. Prepared for Tri-Service System Program Office for Ground Fire Suppression and Rescue, SMF Wright-Patterson Air Force Base, Ohio, Report No. AGFSRS-71-1, February 1972.

2. Military Specification MIL-F-24385 (Navy), Fire Extinguishing Agent, Aqueous Film Forming Foam (AFFF) Liguid Concentrate Six Percent for Fresh and Sea Water, November 21, 1969 and Interim Amendments dated July 7, 1971.

3. Federal Specification O-F-555C, Form Liquid, Fire Extinguishing Mechanical, January 3, 1969.

4. NFPA No. 412, Evaluating Foam Fire Equipment Aircraft Rescue and Fire Fighting Vehicles, 1973 National Fire Protection Association, Boston, Mass.

5. Geyer, George B., Firefighting Effectiveness of Aqueous-Film-Forming-Foam (AFFF) Agents, National Aviation Facilities Experimental Center, Atlantic City, N.J., FAA-NA-72-48, Prepared for DOD Aircraft Ground Fire Suppression and Rescue Unit, Wright Patterson Air Force Base, Ohio, Report No. ASD-TR-73-13 April 1973.

6. Peterson, H. B., Jablonski, E. J., Neill, R. R., Gipe, R. L., and Tuve, R. L., Full-Scale Fire Modeling Test Studies of "Light Water " and Protein Type Foams, Naval Research Laboratory Report 6573, August 15, 1967.

7. Edwards, Thomas M., Development of an Instrument for Measuring Aircraft Cockpit Visibility Limits Technical Development Report No. 153 Civil Aeronautics Administration Technical Development and Evaluation Center, Indianapolis, Indiana, January 1952.

8. Conley, Donald W., Post-Crash Firefighting Studies on Transport Category Aircraft, Report No. RD-65-50, Federal Aviation Agency, Systems Research and Development Service, Atlantic City, New Jersey, May 1965.

9. Geyer, George B., An Investigation of the Resistance of an Aircraft Fuselage to Fire, Report No. NA-69-37, Department of Transportation, Federal Aviation Administration, National Aviation Facilities Experimental Center, Atlantic City, New Jersey, August 1969.

APPENDIX A

FACTORS FOR CONVERTING FROM ENGLISH TO METRIC UNITS

To Convert From	Multiply By	To Obtain
Gallons (U.S. Liquid)	3.785	Liters
Gallons (U.S. Liquid/ft^2/min)	40.74	Liters/Square Meters/Minutes
Square Feet	0.0929	Square Meters
Feet	0.3048	Meters
Inches	2.54	Centimeters
Square Inches	6.4516	Square Centimeters
Degree Fahrenheit (°F)	5/9 (°F-32°)	Degree Celsius
Btu (British Thermal Unit)	252.0	Gram-Calories

APPENDIX B

HIGH-CAPACITY FOAM-DISPENSING VEHICLE FROM MANUFACTURER'S LITERATURE

(Approximate Cost of the Vehicle as of January 1975, $265,000.00 F.O.B. England)

A. PROFILE VIEW OF THE FOAM TRUCK

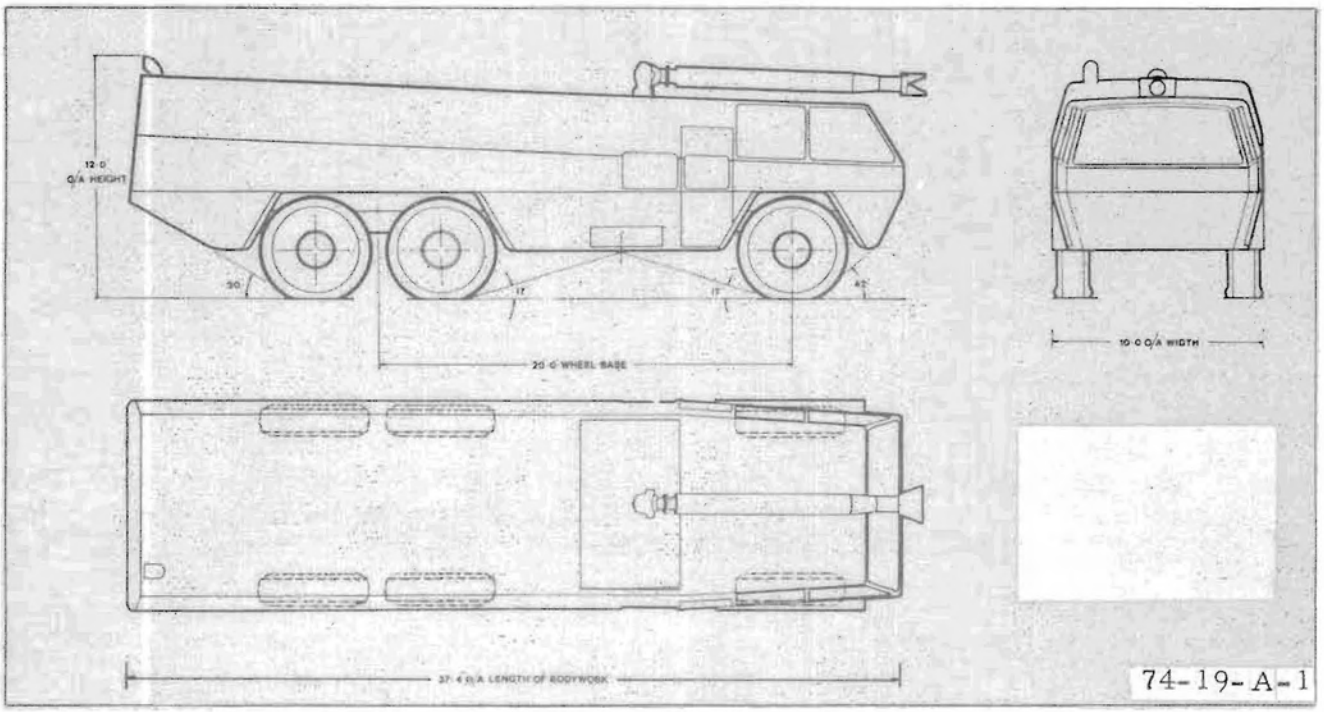

B. OVERALL DIMENSIONS OF THE FOAM TRUCK
(FROM MANUFACTURER'S LITERATURE)

FIGURE B-1. MASSPORT'S PYRENE "PATHFINDER" (CHUBB FIRE SECURITY LIMITED) AIRFIELD FIREFIGHTING CRASH TRUCK

APPENDIX C

ELECTRONIC FIRE-MONITORING EQUIPMENT

The instrumentation employed for the required parametric measurements consisted of radiometers and cameras. Recording instruments consisted of one potentiometer recorder, Dynamaster Model No. 960 manufactured by the Bristol Company, with two pens and equipped with an event marker which was manually actuated when foam was discharged.

Two heat-flux transducers manufactured by Heat Technology Laboratory, Inc., Model GRW20-64P-SP, were mounted on metal stands and positioned around the fire pool. These radiometers measured the radiant heat flux and were rated at 10 ± 1.5 millivolts (mv) at 15 Btu/ft^2-sec. The angle of view was 120 degrees. Each unit was provided with a calibration curve by the manufacturer.