Report No. FAA-RD-74-10,II

OPERATIONAL EVALUATION of an AIRBORNE OMEGA NAVIGATION SYSTEM

VOLUME II
APPENDICES

R. Latchford

R.C. Sanders

October 1973

Prepared for

DEPARTMENT OF TRANSPORTATION
FEDERAL AVIATION ADMINISTRATION
Systems Research & Development Service
Washington, D.C. 20591

Technical Report Documentation Page

1. Report No. FAA-RD-74-10, II	2. Government Accession No.	3. Recipient's Catalog No.
4. Title and Subtitle OPERATIONAL EVALUATION OF AN AIRBORNE OMEGA NAVIGATION SYSTEM		5. Report Date October, 1973 6. Performing Organization Code
7. Author(s)		8. Performing Organization Report No.
9. Performing Organization Name and Address Northrop Corporation, Electronics Division 2301 West 120th Street Hawthorne, California 90274		10. Work Unit No. 043-311-013 11. Contract or Grant No. DOT-FA71WA-2648
12. Sponsoring Agency Name and Address Department of Transportation Federal Aviation Administration Systems Research & Development Service Washington, D.C. 20591		13. Type of Report and Period Covered Final Report June 1971-October 1973 14. Sponsoring Agency Code
15. Supplementary Notes		

16. Abstract

This report covers the evaluation of the Omega Navigation System for aircraft utilization on routes traversing the North Atlantic from the East coast of the United States to Europe. The user equipment was a commercial version of the AN/ARN-99 which is an automatic computerized Omega receiver designed for airborne use and was installed on a DC-8 type aircraft. The principal areas of interest in this evaluation were operational utility, signal reliability and track comparison with other aids available. The Omega system demonstrated its ability to provide smooth bounded position information in a varying and somewhat limited signal environment due to a transitional transmitter configuration.

17. Key Words Omega System Transatlantic Navigation Airborne Omega	18. Distribution Statement Document is available to the public through the National Technical Information Service, Springfield, Virginia 22151.

19. Security Classif. (of this report)	20. Security Classif. (of this page)	21. No. of Pages	22. Price
unclassified	unclassified	84	

Form DOT F 1700.7 (8-72) Reproduction of completed page authorized

APPENDIX A

The following tables list all flights by sequence number. Data includes Route, Fix Update (if any), Number of Signal Acquisitions from the critical 3 stations over segments of the route, and Landfall Error.

*Denotes OMEGA Warning Indicators on at the time of the error measurement.

Sequence No.	Flight No.	Date	Route	Fix Update	Signal Acquisitions			Landfall Error
					Departure	Atlantic	Terminal	
					A B D	A B D	A B D	
1	W0105	1/5/72	McGuire AFB - Frankfurt	None	106 245 133 McGuire Saint John	327 160 078 Saint John Cork	154 030 000 Cork Frankfurt	8.9*
2	W0106A	1/6/72	McGuire AFB Frankfurt	None	054 175 111 McGuire Ramea	356 350 155 Ramea Cork	128 004 000 Cork Frankfurt	4.9
3	W0106B	1/6/72	Frankfurt McGuire AFB	Belfast	177 016 000 Frankfurt Belfast	378 073 020 Belfast Hopedale	030 131 140 Hopedale McGuire	9.3*
4	W0107A	1/7/72	McGuire AFB Zurich	Nantucket	063 110 078 McGuire Sable Island	373 319 155 Sable Island Quimper	102 024 001 Quimper Zurich	2.0
5	W0107C	1/7/72	Frankfurt Detroit	Glasgow	176 039 000 Frankfurt Glasgow	419 353 054 Glasgow Wabush	001 113 081 Wabush Detroit	5.3*
6	W0109A	1/9/72	Bangor Frankfurt	Halifax	042 085 094 Bangor Saint John	381 418 230 Saint John Cork	178 153 054 Cork Frankfurt	2.4
7	W0109C	1/9/72	Amsterdam New York	Eagle	149 018 000 Amsterdam Eagle	344 117 002 Eagle Cartwright	019 153 082 Cartwright New York	52.3*

Sequence No.	Flight No.	Date	Route	Fix Update	Signal Acquisitions			Landfall Error
					Departure	Atlantic	Terminal	
					A B D	A B D	A B D	
8	W0112	1/12/72	Geneva Boston	Belfast	132 037 001 Geneva Belfast	359 133 033 Balfast Cartwright	062 257 210 Cartwright Boston	7.5*
9	W1010A (Note 1)	10/10/72	New York Madrid	Sable Island	004 078 052 New York Sable Island	273 214 017 46°N/50°W Santiago	060 014 000 Santiago Madrid	12.5*
10	W1011A (Note 2)	10/11/72	Malaga Bangor	Marateca	006 036 000 Malaga Marateca	192 413 334 Marateca Sable Island	017 037 144 Sable Island Bangor	2.2
11	W1012B	10/12/72	McGuire AFB Frankfurt	Bangor	014 127 262 McGuire St. Anthony	381 185 151 St. Anthony Belfast	164 008 000 Belfast Frankfurt	5.7
12	W1013C	10/13/72	Amsterdam Baltimore	Land's End	137 008 002 Amsterdam Land's End	371 321 319 Land's End Sable Island	022 101 322 Sable Island Baltimore	6.0
13	W1017A	10/17/72	Dulles Paris	Kennebunk	098 203 318 Dulles Gander	371 203 397 Gander Wallassey	083 010 006 Wallassey Paris	9.1*
14	W1017B	10/17/72	Paris Boston	Cork	076 022 000 Paris Cork	203 137 095 Cork Gander	012 075 337 Gander Boston	1.4

Sequence No.	Flight No.	Date	Route	Fix Update	Signal Acquisitions									Landfall Error
					Departure			Atlantic			Terminal			
					A	B	D	A	B	D	A	B	D	
15	W1210A (Note 3)	12/10/72	Bangor Zurich	Charlottetown	108 Bangor 51°N/40°W	227	293	266 51°N/40°W Cork	310	322	188 Cork Zurich	200	216	1.6
16	W1210D	12/10/72	Vienna Goose Bay	Wallassey	268 Vienna Dublin	062	003	603 Dublin Goose Bay	274	351	Goose Bay			1.2
17	W1228	12/28/72	Los Angeles Amsterdam	Saglek	000 Los Angeles Saglek	236	490	436 Saglek Glasgow	454	419	111 Glasgow Amsterdam	051	032	0.6
18	W1231B	12/31/72	Amsterdam New York	Machrihanish	077 Amsterdam Machrihanish	024	010	556 Machrihanish Goose Bay	241	481	033 Goose Bay New York	462	774	1.2
19	W0314C	3/14/73	Bangor Keflavik	None	011 Bangor Hopedale	153	330	268 Hopedale Keflavik	276	299	Keflavik			4.6*
20	W0315	3/15/73	Keflavik Bangor	None	Keflavik			285 Keflavik Cartwright	341	268	050 Cartwright Bangor	214	278	1.1
21	W0325A	3/25/73	New York Frankfurt	None	055 New York Sable Island	200	370	471 Sable Island Land's End	574	392	146 Land's End Frankfurt	065	037	3.7

Sequence No.	Flight No.	Date	Route	Fix Update	Signal Acquisitions			Landfall Error
					Departure	Atlantic	Terminal	
					A B D	A B D	A B D	
22	W0325C	3/25/73	London Toronto	Shannon	108 049 000 London Shannon	502 378 163 Shannon Springdale	095 229 573 Springdale Toronto	2.2
23	W0326B	3/26/73	McGuire AFB Frankfurt	None	003 183 315 McGuire Saint John	326 264 243 Saint John Land's End	091 030 005 Land's End Frankfurt	3.1
24	W0326C	3/26/73	Frankfurt McGuire AFB	Ottringham	238 080 007 Frankfurt Eagle	486 383 312 Eagle Heath Point	058 176 245 Heath Point McGuire	1.1
25	W0327A	3/27/73	McGuire AFB Frankfurt	None	040 264 429 McGuire Springdale	359 309 258 Springdale Cork	156 072 000 Cork Frankfurt	7.5*
26	W0327B	3/27/73	Frankfurt McGuire AFB	Eagle	227 055 003 Frankfurt Eagle	607 523 311 Eagle Cartwright	090 371 551 Cartwright McGuire	1.2
27	W0419	4/19/73	Niagara Falls Amsterdam	St. Anthony	038 183 403 Niagara St. Anthony	438 501 195 St. Anthony Belfast	084 106 037 Belfast Amsterdam	1.7
28	W0420	4/20/73	Amsterdam Dulles	Shannon	138 037 004 Amsterdam Shannon	368 292 111 Shannon St. Anthony	039 205 400 St. Anthony Dulles	0.7

Sequence No.	Flight No.	Date	Route	Fix Update	Signal Acquisitions			Landfall Error
					Departure	Atlantic	Terminal	
					A B D	A B D	A B D	
29	W0712B	7/12/73	Bangor Rome	None	059 114 288 Bangor Gander	334 406 339 Gander Cork	200 190 129 Cork Rome	2.0
30	W0713C	7/13/73	Prestwick New York	57°N/10°W	Prestwick	483 188 190 Prestwick Cartwright	010 058 252 Cartwright New York	0.9
31	W0714A	7/14/73	New York London	New York on Taxiway	051 234 530 New York Gander	306 296 316 Gander Shannon	116 024 022 Shannon London	0.8
32	W0714C	7/14/73	Prestwick Bangor	None	083 008 005 Prestwick Eagle	355 210 221 Eagle St. Anthony	022 108 300 St. Anthony Bangor	2.0
33	W0725D	7/25/73	Brussels New York	None	152 098 004 Brussels Glasgow	451 340 271 Glasgow Cartwright	044 200 386 Cartwright New York	5.8
34	W0727A	7/27/73	Bangor Rome	Gander (Note 4)	075 187 282 Bangor Gander	376 427 355 Gander Shannon	242 081 045 Shannon Rome	3.5
35	W0727B	7/27/73	Paris Gander	None	104 045 007 Paris Land's End	416 281 169 Land's End Gander	Gander	0.0

Note 1: Station D went off the air for 3 hours from shortly after takeoff to 48°N/28°W. System was airstarted at 46°N/50°W.
Note 2: Power transient airstarted system at 44°N/59°W. Old system time and position used.
Note 3: System airstarted at 51°N/40°W with 'B' fix.
Note 4: Fix was made to correct an erroneously entered 3° latitude error made at Bangor.

APPENDIX B

This appendix includes an example of the Data Sheet used during the program and the completed Data Sheets from a selected flight (Sequence # 26).

An explanation of the terms on the Data Sheet follows:

TIME - Zulu Time at which the data was taken.

POS UNC/AMB - Status of the Omega Warning Indicators. (√) indicates On.

SYSTEM DATA:

- LAT/LONG - Omega System Position
- BRG/RNG - Omega System Bearing and Range to the selected Destination Point (DP)
- TK/GS - Omega System Track and Groundspeed
- POS VAR - Omega System Estimated Position Variance

AIRCRAFT DATA:

- LAT(BRG)/LONG(RNG) - Aircraft Position defined by SOURCE
- SOURCE - Reference used to determine position
  - VOR or NDB - Needle Swing On-Top Mark over Radio Checkpoint
  - DME - Bearing and Range to VORTAC
  - DOP - Doppler Position
- MAG/TAS - Magnetic Compass and True Air Speed Readouts
- DFT/DGS - Drift Angle and Groundspeed from Doppler
- POS ERR - Position Error relative to source
- DP # - Destination Point (Waypoint) Number

OMEGA Signal Data:

- 10.2/13.6/11.3 - Burst Display giving relative strength of each station by frequency.
- A/B/C/D - Signal Acquisition Display giving number acquisitions of each frequency by station.

AIRBORNE OMEGA
FLIGHT DATA SHEET

FLIGHT # W ________ PAGE ____ OF ____

TIME	SYSTEM DATA		AIRCRAFT DATA			COMMENT
TIME	LAT	LONG	LAT (BRG)	LONG (RNG)	SOURCE	
POS UNC (√)	BRG/RNG	TK/GS	MAG/TAS	DFT/DGS	POS ERR	
AMB (√)	POS VAR	10.2	13.6	11.3	DP#	
	A	B	C	D		

DESTINATION POINTS (Per Flight Leg)

Flight # W0327B

DP Number	Coordinates Latitude	Longitude	Type		
Ø	N 50° 02.0	E008° 34.0	Field	Frankfurt	
1	51° 20.0	07° 11.0	Vor	Barmen	113.6
2	52° 32.0	04° 51.0	Vortac	Spijkerboor	113.3
3	53° 24.0	W 03° 08.0	"	Wallasey	114.1
4	53° 24.9	06° 18.4	"	Dublin	114.9
5	54° 16.0	10° 03.4	"	Eagle	117.4
6	56 00.0	20 00.0	Ocean Point	56/20	
7	57 00.0	30 00.0	"	57/30	
8	57 00.0	40 00.0	"	57/40	
9	56 00.0	50 00.0	"	56/50	
10	53° 56.0	55 04.0	"	SCAD	
11	53° 42.0	57 02.0	NDB	Cartwright	
12	49 50.3	64 23.2	NDB	Port Menier	
13	46 46.5	68 05.6	Vortac	Prosque Isle	116.4
14	40 55.1 44 50.5	72 19.0 68 52.5	"	Hampton Bangor	114.8
15	43 25.5	70 36.8	"	Kennebunk	117.1
16	42 21.5 41 57.3	70 54.6 71 50.7	"	Boston Putnam	117.4
17	41 43.4 40 37.8	71 25.8 73 46.8	"	Providence Kennedy	115.4
18	40 01.0	74 36.0	Field	McGuire AFB	

AIRBORNE OMEGA
FLIGHT DATA SHEET

FLIGHT # W0327B

TIME	SYSTEM DATA LAT	SYSTEM DATA LONG	AIRCRAFT DATA LAT (BRG)	AIRCRAFT DATA LONG (RNG)	SOURCE	COMMENT
POS UNC(√)	BRG/RNG	TK/GS	MAG/TAS	DFT/DGS	POS ERR	
AMB (√)	POS VAR	10.2	13.6	11.3	DP#	
	A	B	C	D		
1731	N50 02.0	E 08 34.0				Power X Sys. Sync 1 minute with 'A' only.
		3100	6111	0201		All Stations In.
M3713	50 01.5	083 1.6			Field	Takeoff, Frankfurt
1749	075/1.6	255/150			1.6	Ω Amb On.
	.5 X .5	6210	4112	1101	0	Ω Amb Off. Got some
✓	7 6 —	0 — 0	—	0 — 0		Thinidad.
175542	51 21.6	07 05.9	51 20.0	07 11.0	Vor	Barmen On Top
1800	120/3.6	324/424	321/443	005/397	3.6	Pos unc on
	1.9 X 2.4	7101	7312	2211	1	
	24 26 —	0 1 3	—	0 — 0		
181145	52 34.4	04 43.3	52 32.0	04 51.0	Vor	Spijkeboor On Top
	122/5.3	268/455		0/438	5.3	
✓	3.9 X 5.2	6220	5100	0201	2	
	41 43 —	1 2 6	—	0 — 0		
183856	53 34.0	W 00 24.6	(280)	(100)	DME	Wallussey 100 miles
	273/97.9	278/447	287/468	0/455	2.1	
✓	5.8 X 4.9	6130	7001	1200	100 to 3	
	63 65 —	3 4 10	—	1 1 0		
185234	53 35.0	03 18.3	53 24.0	03 08.0	Vor	Wallassey, Missed it
	160/12.6	274/463	284/468	357/440	12.6	to the North.
✓	7.2 X 7.1	6110	6201	0200	3	
	75 77 —	3 7 13	—	1 1 0		Going direct Eagle
141317	54 05.4	0 29.8	(298)	(100)	DME	Eagle 100 miles
	289/10.6	289/454	299/470	005/455	9.4	
✓	10.6 X 9.6	7202	7100	0400	100 to 5	
	98 00 —	4 1 27	—	1 1 0		
192657	54 19.8	10 09.7	54 16.0	10 03.4	Vor	Eagle. 'A' FIX.
	150/5.3	274/447		008/427	5.3	
	11.1 X 10.8	7301	7100	1202	5	
	12 15 —	5 2228	—	1 2 0		

AIRBORNE OMEGA
FLIGHT DATA SHEET

FLIGHT # W0327B

TIME	SYSTEM DATA LAT	SYSTEM DATA LONG	AIRCRAFT DATA LAT (BRG)	AIRCRAFT DATA LONG (RNG)	SOURCE	COMMENT
POS UNC(√)	BRG/RNG	TK/GS	MAG/TAS	DFT/DGS	POS ERR	
AMB (√)	POS VAR	10.2	13.6	11.3	DP#	
	A	B	C	D		
194149	5451.6	1253.5	(180)	(105)	DME	Eagle 105 miles back
	124/105.1	288/429	297/480	005/428	0.1	Trinidad still weak,
	.9X.9	7100	7211	1401	105 to 5	North Dakota 13.6 is
	2933–	72735	—	151		the strongest
195629	5520.0	1545.1	(303)	(150)	DOP	56/20 150 miles
	303/148.9	287/433	301/477	003/412	1.1	
	.9X.8	7310	7522	1301	150 to 6	
	4549–	082942	—	184		
201836	5557.0	1955.1	5600.0	2000.0	DOP	56/20 On Top
	337/4.0	283/399	304/476	0/385	4.0	Error: S 3.0 X E 4.9
	.9X.8	6222	7211	1502	6	
	7074–	123655	—	2117		
205037	5634.6	2518.4	(303)	(150)	DOP	57/30 150 miles
	304/156.6	281/353	303/466	0/336	6.6	
	.9X.9	7102	7401	1301	150 to 7	
	0513–	175277	—	051815		
211725	5659.4	2946.4	5700.0	3000.0	DOP	57/30 On Top
	300/7.4	278/350	298/468	001/334	7.4	Error: S 0.6 X E 13.6
	1.1X1.1	6304	5000	0301	8	
	3343–	267195	—	111921		13.6 on 'D' weak now
215521	5702.8	3609.8	(298)	(115)	DOP	57/40 115 miles
	299/255	269/345	295/469	004/330	10.5	
	.7X.7	6304	6301	1103	115 to 8	
	7387–	410121	—	252733		
221652	5659.9	3935.0	5700.0	4000.0	DOP	57/40 On Top
	301/13.6	269/332	291/470	003/315	13.6	Error: S 0.1 X E 25.0
	.6X.6	6304	6100	0402	8	
	9310–	501836	—	363241		
225935	5621.9	4555.8	(286)	(120)	DOP	56/50 120 miles
	296/137.9	258/322	285/476	007/305	17.9	
	.4X.5	7423	6401	0613	120 to 9	
	3555–	765472	—	634669		

AIRBORNE OMEGA
FLIGHT DATA SHEET

FLIGHT # W0327B

TIME	SYSTEM DATA LAT	SYSTEM DATA LONG	AIRCRAFT DATA LAT (BRG)	AIRCRAFT DATA LONG (RNG)	SOURCE	COMMENT
POS UNC(√)	BRG/RNG	TK/GS	MAG/TAS	DFT/DGS	POS ERR	
AMB (√)	POS VAR	10.2	13.6	11.3	DP#	
	A	B	C	D		
232327	5557.5	4926.1	5600.0	5000.0	Pop	56/50 On Top
	312/19.2	254/323	267/460	005/335	19.2	Error: S2.5 X E33.9
	.4 X .5	5504	4301	0501		Loran + Ocean station
	5881 –	937391	—	785382		agrees with Omega.
235755	5351.7	5422.6	5356.0	5504.0	Dop	Scad On Top
	313/24.8	236/399	293/477	0/386	24.8	Error: S4.3 X E4.4
	.3 X .4	5315	6400	0402	10	
	8818 –	160721	—	047504		
001246	5343.0	5703.2	5342.0	5702.0	NDB	Cartwright on Top
	176/1.2	262/403	260/471	003/400	1.2	Error: N1.0 X W1.2
	.3 X .4	2424	3201	0504	11	Omega was right.
	0034 –	232134	—	158415		Doppler off coming across
010552	4949.1	6424.2	4950.3	6423.2	NDB	Port Mouton On Top
	053/1.3	227/446		355/437	1.3	Error: S1.2 X W1.0
	.3 X .4	2518	0206	1707	12	
	2170 –	486883	—	623369		
012445	4742.3	6640.6	(247)	(85)	DME	Presque Isle 80 miles
	250/80.4	225/444	254/279	354/444	0.4	Going direct Kennebunk
	.4 X .4	2308	1306	0607	80 to 13	
	2381 –	618402	—	855491		
015218	4453.6	6930.7	(230)	(100)	DME	Kennebunk 100 miles
	228/100.3	208/452	232/466	350/450	0.3	
	.3 X .4	1528	1508	0607	100 to 15	
	2588 –	800728	—	178324		
020536	4325.5	7036.1	4325.5	7036.8	Vor	Kennebunk On Top
	287/0.4	210/454	211/470	350/454	0.4	Error: N0.0 X E0.7
	.5 X .4	1418	2518	0717	15	
	2690 –	891740	—	310039		
021404	4221.2	7101.3	4221.5	7059.6	Vor	Boston On Top
	093/1.3	208/465	228/467	350/465	1.3	Error: S0.3 X W1.7
	.6 X .6	1409	1408	0707	16	
	2691 –	962348	—	421150		

AIRBORNE OMEGA
FLIGHT DATA SHEET

FLIGHT # W032713

TIME	SYSTEM DATA LAT	SYSTEM DATA LONG	AIRCRAFT DATA LAT (BRG)	AIRCRAFT DATA LONG (RNG)	SOURCE	COMMENT
POS UNC(√)	BRG/RNG	TK/GS	MAG/TAS	DFT/DGS	POS ERR	
AMB (√)	POS VAR	10.2	13.6	11.3	DP#	
	A	B	C	D		
021920	4144.3	7125.4	4143.4	7125.8	VOR	Providence On Top
	212/0.9	207/473	241/466	355/467	0.9	Error: N0.9 X E0.4
	.4 X .5	1408	1308	1707	17	
	27 92 –	00 27 53	—	48 18 56		
022739	4056.2	7218.7	4055.1	7219.0	VOR	Hampton On Top
	205/1.1	229/451	241/479	355/448	1.1	Error: N1.1 X E0.3
	.5 X .5	0318	0228	0707	14	
	28 93 –	07 30 61	—	58 30 67		
023847	3953.3	7334.1	(272)	(40)	DME	Coyle 40 miles
	276/40.1	219/353		358/340	0.1	
	.6 X .6	3408	2218	1707	40 to 19	
	28 95 –	10 34 72	—	71 45 79		
025750	4002.2	7434.8	4001.0	7436.0	Field	Touchdown, McGuire
	27/1.8	130/140			1.8	Error: N1.2 X E1.2
	1.1 X 1.0	1409	0218	0717	18	
	28 96 –	17 43 79	—	94 70 03		

APPENDIX C

The following tables are extracts from the monthly Progress Reports submitted during the program. Data consists of position error over the entire flight route and in reverse order by Sequence Number.

Sequence #35

FLT # W0727B

OMEGA VERSUS LORAN AND VOR/DME

Time	Omega Position		LORAN Data	LORAN Position		VOR/DME Position		Radial Error N.Miles	Comment
	Latitude (BRG)	Longitude (RNG)		Latitude	Longitude	Latitude (BRG)	Longitude (RNG)		
1722	N48°57.0	E02°26.1				N48°57.0	E02°26.1	0	Takeoff. Paris Le Bourget. System resolved. Lights out.
1803	(313)	(99.8)				(311)	(101)	1.2	Land's End 101 Miles. Receiving North Dakota.
1816	N50°09.5	W05°38.4				N50°08.2	W05°38.2	1.3	Land's End. No lights. Variance under 1 mile.
1828	(093)	(92.5)				(99)	(92)	0.5	Land's End 92 miles.
1837	(096)	(171)				(102)	(172)	1.0	Land's End 172 miles.
1900 - 2200	---	---				---	---	---	Normal 3-station operation. No lights. Small variance.
---	---	---				---	---	---	Position close to LORAN and Doppler.
2208	(298)	(100.0)				(294)	(100)	0.0	Gander 100 miles. Variance down to .5 miles.
2225	(296)	(50.0)				(294)	(50)	0.0	Gander 50 miles.
2234	N48°56.5	W54°34.5				N48°56.4	W54°34.2	0.0	Touchdown. Gander. Position shown at Ramp.

Sequence #34
Page 1 of 2

FLT # W0727A

OMEGA VERSUS LORAN AND VOR/DME

Time	Omega Position		LORAN Data	LORAN Position		VOR/DME Position		Radial Error N.Miles	Comment
	Latitude (BRG)	Longitude (RNG)		Latitude	Longitude	Latitude (BRG)	Longitude (RNG)		
0316	N41°48.5	W68°49.5				N44°48.9	W68°49.6	180.0	Takeoff - Bangor. Present Position insert 3° South. Both lights on.
0336	N43°12.4	W66°40.6				N45°24.4	W65°52.3	137.0	Saint John. Both lights on. Receiving Norway now.
0416	N45°30.3	W59°28.4				N47°34.0	W59°07.5	124.7	Channel Head.
0440	N46°48.6	W54°54.3				N48°54.0	W54°32.2	126.5	Gander. "B" fix to correct erroneous Bangor position.
0440 - 0800	---	---				---	---	---	System resolved 3 minutes after fix. Normal 3-station operation.
---	---	---				---	---	---	Position close to LORAN and Doppler. No lights.
0753	(109)	(100.7)				(107)	(100)	0.7	Shannon 100 miles. No lights. Small variance.
0805	N52°44.9	W08°58.6				N52°42.1	W08°55.1	3.5	Shannon. Still receiving North Dakota.
0823	N52°02.6	W05°02.1				N51°59.7	W05°02.3	2.9	Strumble.
0831	N51°43.2	W03°17.5				N51°43.4	W03°15.7	1.1	Brecon. Variance still about .5 miles
0842	N51°26.1	W00°57.4				N51°27.2	W00°52.7	3.1	Woodley.
0904	N48°38.5	E02°03.2				N48°39.2	E01°59.7	2.4	Rambouillet. Losing North Dakota now. Variance growing.
0919	N46°51.1	E04°13.5				N46°48.4	E04°15.6	3.0	Autun.

Sequence #34

Page 2 of 2

FLT # W0727A

OMEGA VERSUS LORAN AND VOR/DME

Time	Omega Position		LORAN Data	LORAN Position		VOR/DME Position		Radial Error N.Miles	Comment
	Latitude (BRG)	Longitude (RNG)		Latitude	Longitude	Latitude (BRG)	Longitude (RNG)		
0928	N46°11.6	E05°57.1				N46°09.8	E06°00.4	2.9	Passeiry.
0941	N44°54.1	E07°57.7				N44°55.5	E07°51.7	2.5	Torino. Still receiving a little North Dakota.
0947	N44°27.2	E09°03.7				N44°25.4	E09°04.9	1.9	Genova. No lights.
0958	N43°31.6	E10°16.7				N43°35.2	E10°17.8	3.7	Pisa.
1004	N42°48.6	E11°03.4				N42°42.7	E11°01.6	6.1	Grossetto.
1025	N41°49.1	E12°31.5				N41°47.8	E12°35.4	3.2	Touchdown. Rome. No lights entire flight. Variance out to 1 mile.

Sequence #33

FLT #W0725D

OMEGA VERSUS LORAN AND VOR/DME

Time	Omega Position		LORAN Data	LORAN Position		VOR/DME Position		Radial Error N.Miles	Comment
	Latitude (BRG)	Longitude (RNG)		Latitude	Longitude	Latitude (BRG)	Longitude (RNG)		
2219	N50°54.0	E04°30.0				N50°54.0	E04°30.0	0.0	Takeoff - Brussels. Resolved. No North Dakota yet.
2225	N51°10.7	E04°10.5				N51°10.0	E04°11.1	0.8	Nicky. Variance growing.
2325	N55°41.1	W04°17.5				N55°42.0	W04°21.0	2.2	Glasgow. POS UNC on. Variance out to 4 miles. Weak North Dakota.
0030	---	---				---	---	---	Position uncertainty resolved with North Dakota signal. Lights out.
0030 - 0330	---	---				---	---	---	Normal 3-station operation. No lights. Small variance.
---	---	---				---	---	---	Position close to LORAN and Doppler.
0330	N53°46.3	W57°08.6				N53°42.6	W57°01.1	5.8	Cartwright. No lights.
0416	N49°52.3	W64°21.1				N49°50.0	W64°17.0	5.3	Port-Menier. No lights. Variance still small.
0447	N46°46.1	W68°02.5				N46°46.5	W68°05.7	2.2	Presque Isle. Lost Norway signal. Variance growing.
0527	---	---				---	---	---	System kicked. Both lights on. Variance 5 miles.
0531	N41°40.5	W71°42.5				N41°33.4	W72°00.0	14.8	Norwich. Both lights still on.
0605	N40°47.7	W73°33.4				N40°38.0	W73°47.0	14.2	Touchdown. New York. Both lights on. Large variance.

Sequence #32

OMEGA VERSUS LORAN AND VOR/DME

FLT # W0714C

Time	Omega Position		LORAN Data	LORAN Position		VOR/DME Position		Radial Error N.Miles	Comment
	Latitude (BRG)	Longitude (RNG)		Latitude	Longitude	Latitude (BRG)	Longitude (RNG)		
1403	N55°30.8	W04°36.8				N55°29.1	W04°35.6	1.9	Takeoff - Prestwick. Resolved. Lights out.
1422	(257)	(99.7)				(256)	(100)	0.3	Eagle 100 miles. Getting some North Dakota signal now.
1436	N54°18.7	W10°07.0				N54°16.0	W10°03.4	1.5	Eagle. Passed to the right of it. Error approximate.
1500 - 1800	---	---				---	---	---	Normal 3-station operation. No lights enroute. Position close to LORAN and Doppler.
1810	N51°28.4	W55°55.6				N51°32.8	W55°55.6	2.0	St. Anthony. Passed to the south few miles. Error approximate.
1847	N49°03.8	W61°40.4				N49°05.1	W61°42.1	1.0	Heath Point. Passed south about 1 mile. Losing Norway.
1914	(247)	(94.8)				(245)	(95)	0.2	Frederickton 95 miles. No more Norway.
1932	(259)	(101.2)				(257)	(100)	1.2	Bangor 100 miles. Variance out to over 1 mile.
1939	(256)	(52.3)				(255)	(50)	2.3	Bangor 50 miles. Variance still growing.
1957	N44°52.0	W68°44.6				N44°48.0	W68°50.0	5.6	Touchdown. Bangor. System ambiguous.

Sequence #31

OMEGA VERSUS LORAN AND VOR/DME

FLT # W0714A

Time	Omega Position		LORAN Data	LORAN Position		VOR/DME Position		Radial Error N.Miles	Comment
	Latitude (BRG)	Longitude (RNG)		Latitude	Longitude	Latitude (BRG)	Longitude (RNG)		
0238	N40°36.5	W73°47.9				N40°37.8	W73°46.4	1.7	Takeoff - New York. "A" fix on taxiway. Lights out.
0303	N41°43.8	W71°26.4				N41°43.5	W71°25.8	0.5	Providence. Getting some Norway signal already.
0318	N43°25.8	W70°38.1				N43°25.5	W70°36.9	0.9	Kennebunk. Variance under a mile.
0346	N45°24.2	W65°50.0				N45°24.4	W65°52.3	1.6	Saint John. Good signal all stations.
0422	N47°35.3	W59°07.6				N47°33.9	W59°07.6	1.4	Channel Head. Variance under .5 mile.
0500 - 0800	---	---				---	---	---	Normal 3-station operation. POS UNC on for 10 minutes enroute.
---	---	---				---	---	---	Resolved normally. Position close to LORAN and Doppler.
0759	(112)	(99.1)				(109)	(100)	0.9	Shannon 100 miles. Still getting North Dakota.
0811	N52°41.7	W08°53.9				N52°42.1	W08°55.0	0.8	Shannon. Still good signal. Variance of .5 mile.
0818	(118)	(89.8)				(118)	(90)	0.2	Strumble 90 miles. Losing North Dakota now.
0829	N52°00.9	W05°00.4				N51°59.7	W05°02.3	1.7	Strumble. Variance growing.
0841	(311)	(30.6)				(310)	(30)	0.6	Brecon 30 miles. On descent.
0909	N51°08.6	W00°12.5				N51°09.0	W00°12.0	0.5	Touchdown. Gatwick. Still getting some North Dakota. Variance less than 1 mile.

Sequence #30

FLT # W0713C

OMEGA VERSUS LORAN AND VOR/DME

Time	Omega Position		LORAN Data	LORAN Position		VOR/DME Position		Radial Error N.Miles	Comment
	Latitude (BRG)	Longitude (RNG)		Latitude	Longitude	Latitude (BRG)	Longitude (RNG)		
1516	N55°30.7	W04°34.5				N55°30.0	W04°35.0	1.1	Takeoff-Prestwick. No North Dakota signal.
1548	---	---				---	---	---	57 N/10 W. "B" fix from Doppler. POS UNC on.
1702	---	---				---	---	---	Resolved uncertainty with North Dakota reception. Lights out.
1710 - 1930	---	---				---	---	---	Normal 3-station operation. Position close to LORAN & Doppler.
---	---	---				---	---	---	No lights. Small variance enroute.
1925	N53°43.3	W57°00.3				N53°42.6	W57°01.1	0.9	Cartwright. Still getting Norway. No lights.
2015	N49°51.9	W64°21.1				N49°50.3	W64°23.2	2.1	Port Menier. Losing Norway. Variance growing.
2046	N46°50.5	W67°58.9				N46°46.5	W68°05.7	6.2	Presque Isle. Norway signal completely gone.
2101	N44°57.0	W68°46.3				N44°50.5	W68°52.5	7.8	Bangor. Variance out to 2 miles now.
2205	N40°43.1	W73°43.5				N40°38.0	W73°47.0	6.1	Touchdown. New York. POS UNC on. Variance out to 4 miles.

Sequence #29

OMEGA VERSUS LORAN AND VOR/DME

FLT # W0712B

Time	Omega Position		LORAN Data	LORAN Position		VOR/DME Position		Radial Error N.Miles	Comment
	Latitude (BRG)	Longitude (RNG)		Latitude	Longitude	Latitude (BRG)	Longitude (RNG)		
2250	N44°48.5	W68°51.0				N44°48.0	W068°50.0	0.7	Takeoff - Bangor. Trinidad and North Dakota only.
2313	N45°26.2	W65°50.0				N45°24.5	W65°52.3	1.9	Saint John. POS UNC on. No Norway yet.
2350	N47°34.5	W59°06.0				N47°35.6	W59°07.5	1.5	Channel Head. Lights out. Getting Norway now.
0013	N48°53.6	W54°31.6				N48°54.0	W54°32.2	0.6	Gander. Good signal. Small variance. No lights.
0030 - 0300	---	---				---	---	---	Normal 3-station operation. Excellent enroute navigation.
---	---	---				---	---	---	System position close to LORAN and Doppler.
0318	(112)	(97.5)				---	(100)	2.5	Cork 100 miles. No lights. Small variance.
0329	N51°49.0	W08°27.2				N51°50.4	W08°29.6	2.0	Cork. No lights. Still receiving North Dakota
0347	N50°08.2	W05°36.8				N50°08.2	W05°38.2	0.8	Lands End.
0425	N48°38.3	E01°57.4				N48°39.0	E02°00.0	1.8	Rambouillet. Still getting some North Dakota.
0441	N46°47.7	E04°14.8				N46°48.0	E04°16.0	0.9	Autun.
0519	N43°59.5	E11°01.3				N44°02.0	E11°00.0	2.3	Firenze. No lights yet.
0550	N41°45.1	E12°36.0				N41°48.0	E12°36.0	3.0	Touchdown. Rome Ciampino. Still receiving all 3 stations. No lights.

Sequence #28

OMEGA VERSUS LORAN AND VOR/DME

FLT # W0420

Time	Omega Position		LORAN Data	LORAN Position		VOR/DME Position		Radial Error N.Miles	Comment
	Latitude (BRG)	Longitude (RNG)		Latitude	Longitude	Latitude (BRG)	Longitude (RNG)		
1620	N53°19.0	E004° 44.8				N52°19.0	E004° 46.0	0.7	Takeoff. Schipol. Only Norway coming in.
1646	(133)	(85.0)				(140)	(80)	5.0	Schipol 80 miles. No North Dakota. In difference frequency.
1718	(287)	(39.1)				(288)	(40)	0.9	Dublin 40 miles. Both lites on. No North Dakota. Weak Trinidad.
1723	53° 28.1	W06° 16.5				53° 29.9	W06° 18.4	2.2	Dublin on top. Both lites on. Large variance.
1736	---	---				52° 42.1	08° 55.0	---	Shannon. "A" fix. Getting some North Dakota now.
1800 - 2100	---	---				---	---	---	Normal 3-station operation enroute. Excellent navigation.
2110	----	---				---	---	---	System kicked into difference frequency.
2114	51° 33.2	55° 55.5				51° 32.6	55° 55.7	0.7	St. Anthony. Landfall. Norway getting weak.
2207	(253)	(101.7)				(250)	(100)	1.7	Fredrickton 100 miles. In differance frequency.
2219	45° 53.8	66° 30.7				45° 53.7	66° 25.2	3.8	Fredrickton on top. Ambiguity on.
2234	44° 47.8	68° 54.9				44° 50.5	68° 52.5	3.0	Bangor on top. Ambiguity on. No Norway.
2248	43° 26.0	70° 38.3				43° 25.5	70° 36.8	1.2	Kennebenk on top. Got some Norway. Resolved. Lites out.
2351	38° 59.6	77° 15.1				38° 57.0	77° 27.0	9.6	Touchdown. Dulles. In difference frequency. Large variance.

Sequence #27

FLT # W0419

OMEGA VERSUS LORAN AND VOR/DME

Time	Omega Position		LORAN Data	LORAN Position		VOR/DME Position		Radial Error N.Miles	Comment
	Latitude (BRG)	Longitude (RNG)		Latitude	Longitude	Latitude (BRG)	Longitude (RNG)		
1957	N43°06.9	W078° 56.3				N43°06.0	W078° 57.0	1.0	Takeoff. Niagara Falls, No Norway.
2023	(257)	(53.2)				(255)	(50)	3.2	Stirling 50 miles. Weak Trinidad.
2053	46° 53.3	71° 29.9				46° 42.3	71° 37.6	12.2	Quebec on top. Large variance. In difference frequency.
2137	49° 58.0	64° 09.1				49° 50.3	64° 17.1	9.3	Port Menier on top. No Norway. In difference frequency.
2219	---	---				51° 32.6	55° 55.7	---	St. Anthony. "A" fix. Starting to get Norway now.
2230 - 0130	---	---				---	---	---	Normal 3-station operation. Excellent enroute navigation.
0148	(135)	(131.0)				(135)	(130)	1.0	Isle of Man 130 miles. No lites.
0159	54° 31.2	05° 52.6				54° 29.6	05° 51.9	1.7	Belfast on top. Landfall. North Dakota weak. No lites.
0213	(113)	(101.5)				(114)	(100)	1.5	Ottringham 100 miles.
0225	53° 42.7	00° 09.7				53° 41.0	00° 06.0	2.8	Ottringham on top. No lites. Variance growing.
0247	(125)	(31.7)				(128)	(30)	1.7	Schipol 30 miles, No Norway now.
0257	52° 24.4	E04° 42.8				52° 19.0	E04° 46.0	5.7	Touchdown. Schipol. No Norway last 30 minutes.

Sequence #26

OMEGA VERSUS LORAN AND VOR/DML

FLT # W0327B

Time	Omega Position		LORAN Data	LORAN Position		VOR/DME Position		Radial Error N.Miles	Comment
	Latitude (BRG)	Longitude (RNG)		Latitude	Longitude	Latitude (BRG)	Longitude (RNG)		
1737	N50°01.5	E008°31.6				N50°02.0	E008°34.0	1.6	Takeoff. Frankfurt. Only Norway. In difference frequency.
1812	52°34.4	04°43.3				52°32.0	04°51.0	5.3	Spijkeboor. On-top. Some Trinidad. No North Dakota.
1927	--	--				54°16.0	W 10°03.4	--	Eagle. "A" fix. Getting some North Dakota now.
1930 2400	--	--				--	--	--	Excellent enroute navigation. No lites. Small variance.
0013	53°43.0	57°03.2				53°42.0	57°02.0	1.2	Cartwright. On-top. Landfall. No lites.
0104	49°49.1	64°24.2				49°50.3	64°23.2	1.3	Port Menier. On-top. Norway getting weak.
0152	(228)	(100.3)				(230)	(100)	0.3	Kennebunk. 100 miles. No lites. Small variance.
0206	43°25.5	70°36.1				43°25.5	70°36.8	0.4	Kennebunk. On-top.
0214	42°21.2	71°0.13				42°21.5	70°59.6	1.3	Boston. On-top.
0219	41°44.3	71°25.4				41°43.4	71°25.8	0.9	Providence. On-top.
0228	40°56.2	72°18.7				40°55.1	72°19.0	1.1	Hampton. On-top.
0239	(276)	(40.1)				(272)	(40)	0.1	Coyle. 40 miles. Variance growing.
0258	40°02.2	74°34.8				40°01.0	74°36.0	1.8	Touchdown. McGuire AFB. Variance out to 1 mile. No lites.

Sequence #25

FLT # W0327A

OMEGA VERSUS LORAN AND VOR/DME

Time	Omega Position		LORAN Data	LORAN Position		VOR/DME Position		Radial Error N.Miles	Comment
	Latitude (BRG)	Longitude (RNG)		Latitude	Longitude	Latitude (BRG)	Longitude (RNG)		
0555	N40°02.1	W074°35.2				N40°01.0	W074°36.0	1.7	Takeoff. McGuire AFB. Getting Norway. No lites.
0618	40°56.2	72°18.6				40°55.1	72°19.0	1.2	Hampton. On-top. No lites.
0653	(075)	(99.5)				(074)	(100)	0.5	Fredrickton. 100 miles. Norway getting stronger.
0704	45°55.2	66°25.1				45°53.7	66°25.2	1.5	Fredrickton. On-top. No lites.
0741	48°32.4	58°30.0				48°32.3	58°33.7	2.4	Stephenville. On-top.
0752	40°31.8	56°11.0				49°29.4	56°11.1	2.4	Springdale. On-top. No lites.
0800 1000	--	--				--	--	--	Good enroute navigation. Close to Doppler. No lites.
1018	--	--				--	--	--	Both lites on. Weak North Dakota signal at 15° west.
1053	(105)	(96.9)				(104)	(100)	3.1	Cork. 100 miles. In difference frequency.
1103	51°45.9	08°19.9				51°50.4	08°29.6	7.5	Cork. On-top. Landfall. No North Dakota. Weak Trinidad.
1149	51°06.7	E 01°31.9				51°10.0	E 01°21.0	7.6	Dover. On-top. In difference freq.
1210	50°25.2	05°53.3				50°35.0	05°43.0	11.8	Olno. On-top.
1240	49°54.5	08°53.1				50°02.0	08°34.0	14.4	Touchdown. Frankfurt. In difference frequency.

Sequence #24

FLT # W0326C

OMEGA VERSUS LORAN AND VOR/DME

Time	Omega Position		LORAN Data	LORAN Position		VOR/DME Position		Radial Error N.Miles	Comment
	Latitude (BRG)	Longitude (RNG)		Latitude	Longitude	Latitude (BRG)	Longitude (RNG)		
1637	N50°02.5	E008°36.5				N50°02.0	E008°34.0	1.7	Takeoff. Frankfurt. Only receiving Norway.
1658	51°21.9	07°08.1				51°20.0	07°11.0	2.6	Barmen. On-top. In difference freq. No North Dakota yet.
1712	52°36.0	04°45.2				52°32.0	04°51.0	5.3	Spijkerboor. On-top. Still no North Dakota.
1738	--	--				--	--	--	Ottringham. "A" fix. Weak North Dakota now.
1822	(293)	(33.6)				(290)	(40)	6.4	Eagle, 40 miles. Variances growing. No lites.
1828	54°22.6	W 10°12.3				54°16.0	W 10°03.0	8.5	Eagle. On-top. North Dakota getting stronger. No lites.
1900 2300	--	--				--	--	--	Good enroute navigation relative to Doppler. No lites.
2315	49°06.2	61°42.6				49°05.1	61°42.1	1.1	Heath Point. On-top. Landfall. No Lites.
2355	(252)	(39.4)				(250)	(40)	0.6	Fredrickton. 40 miles. Norway getting weak.
0002	45°54.1	66°26.2				45°52.7	66°25.2	0.8	Fredrickton. On-top.
0021	44°50.5	68°52.7				44°50.5	68°52.5	0.1	Bangor. On-top.
0038	43°25.7	70°38.2				43°25.5	70°36.8	1.0	Kennebunk. On-top.
0129	40°02.3	74°34.8				40°01.0	74°36.0	1.4	Touchdown. McGuire AFB. No lites.

OMEGA VERSUS LORAN AND VOR/DME

Sequence #23
FLT # W0326B

Time	Omega Position		LORAN Data	LORAN Position		VOR/DME Position		Radial Error N.Miles	Comment
	Latitude (BRG)	Longitude (RNG)		Latitude	Longitude	Latitude (BRG)	Longitude (RNG)		
0645	N40°01.7	W074°36.3				N40°01.0	W074°36.0	0.8	Takeoff. McGuire AFB. Only Trinidad and North Dakota.
0720	41°12.5	70°13.3				41°16.9	70°01.6	9.8	Nantucket. On-top. In difference frequency. No Norway.
0746	43°48.8	66°13.4				43°49.5	66°05.5	6.2	Yarmouth. On-top.
0818	46°11.2	60°04.8				46°09.2	60°03.4	2.2	Sydney. On-top. Still in difference frequency.
0851	47°25.6	52°49.5				47°29.1	52°51.2	3.7	St. Johns. On-top. Norway coming in now.
0930	--	--				--	--	--	Out of difference frequency. Ambiguity on. Small error.
1000	--	--				--	--	--	Resolved. Lites out. Small variance. Small error.
1000 1200	--	--				--	--	--	Good enroute navigation. Doppler off to North.
1217	50°10.5	05°41.4				50°08.2	05°38.2	3.1	Land's End. On-top. Landfall. Weak North Dakota.
1251	51°14.8	E 01°13.4				51°10.0	E 01°21.0	6.8	Dover. On-top.
1312	50°38.5	05°37.6				50°35.0	05°43.0	4.9	Olno. On-top.
1335	50°08.0	08°33.1				50°02.0	08°34.0	6.5	Touchdown. Frankfurt. No North Dakota.

OMEGA VERSUS LORAN AND VOR/DME

Sequence #22
FLT # W0325C

Time	Omega Position		LORAN Data	LORAN Position		VOR/DME Position		Radial Error N.Miles	Comment
	Latitude (BRG)	Longitude (RNG)		Latitude	Longitude	Latitude (BRG)	Longitude (RNG)		
1527	N51°08.9	W000°13.7				N51°09.0	W000°12.0	1.1	Takeoff. Gatwick. Only receiving Norway.
1559	52°04.9	05°09.0				52°00.0	05°02.0	6.5	Strumble. On-top. In difference frequency. No North Dakota
1620	--	--				52°42.0	08°55.0	--	Shannon. "A" fix. Still no North Dakota.
1630 2000	--	--				--	--	--	Good position to Doppler/LORAN. In difference freq. to 45° west.
2044	49°30.6	56°13.9				49°29.4	56°11.1	2.2	Springdale. On-top. Landfall. Lites out.
2102	48°33.3	58°31.2				48°32.3	58°33.7	2.0	Stephensville. On-top.
2125	47°25.1	61°55.8				47°22.6	61°54.4	2.0	Grinstone. On-top. Norway and Trinidad weak.
2208	46°00.1	67°54.5				46°02.3	67°50.1	3.8	Houlton. On-top. Lites on. No Norway.
2250	45°33.4	74°03.3				45°37.0	73°58.3	5.0	St. Eustache. On-top. Ambiguity on.
2302	45°26.4	75°57.2				45°26.5	75°53.8	2.4	Ottowa. On-top. No Norway or Trinidad.
2344	43°43.0	79°38.5				43°41.0	79°38.7	2.0	Touchdown, Toronto. Ambiguity on.

Sequence #21

FLT # W0325A

OMEGA VERSUS LORAN AND VOR/DME

Time	Omega Position		LORAN Data	LORAN Position		VOR/DME Position		Radial Error N.Miles	Comment
	Latitude (BRG)	Longitude (RNG)		Latitude	Longitude	Latitude (BRG)	Longitude (RNG)		
0155	N40°38.8	W073°48.1				N40°37.8	W073°46.3	1.7	Takeoff. Kennedy. Receiving a little Norway signal.
0214	(085)	(80.6)				(088)	(80)	0.6	Nantucket 80 miles. No lites.
0225	41°15.6	70°04.8				41°16.9	70°01.6	2.8	Nantucket on-top.
0232	(266)	(59.9)				(265)	(60)	0.1	Nantucket 60 miles back.
0322	43°57.4	60°01.6				43°56.0	60°00.7	1.5	Sable Island on-top. No lites. Small variance.
0330 0700	--	--				--	--	--	Good enroute navigation. Close to Doppler and LORAN.
0719	(096)	(134.1)				(098)	(130)	4.1	Land's End 130 miles. Trinidad and North Dakota weak.
0728	(100)	(53.7)				(096)	(50)	3.7	Land's End 50 miles.
0735	50°11.6	05°40.5				50°08.2	05°38.2	3.7	Land's End on-top. Variance growing.
0753	50°58.9	01°51.1				50°53.6	01°44.7	6.7	Ibsley on-top. Very little Trinidad or North Dakota.
0808	51°16.3	E 01°11.3				51°10.0	E 01°21.0	8.8	Dover on-top.
0829	50°42.4	05°31.6				50°35.0	05°43.0	10.3	Olno on-top.
0859	50°11.8	08°18.2				50°02.0	08°34.0	14.0	Touchdown. Frankfurt. Large position variance.

Sequence #20

FLT # W0315

OMEGA VERSUS LORAN AND VOR/DME

Time	Omega Position		LORAN Data	LORAN Position		VOR/DME Position		Radial Error N.Miles	Comment
	Latitude (BRG)	Longitude (RNG)		Latitude	Longitude	Latitude (BRG)	Longitude (RNG)		
0230	N63°58.1	W022°36.4				N63°59.2	W022°36.6	1.2	Takeoff. Keflavik. Very weak North Dakota on 13.6 KHz.
0234	--	--				--	--	--	System kicked on North Dakota. Resolved ambiguity. In difference freq.
0237	(118)	(39.5)				(106)	(30)	9.5	Keflavik 30 miles back. Not receiving North Dakota. In difference freq.
0253	(106)	(138.1)				(105)	(130)	8.1	Keflavik 130 miles back. Still in difference frequency.
0321	--	--				--	--	--	Out of difference frequency with reception of North Dakota. Small error.
0330 0515	--	--				--	--	--	Good navigation enroute. No lites. Small variance.
0521	(297)	(96.7)				(296)	(95)	1.7	Goose Bay 95 miles.
0601	49°49.2	64°22.9				49°50.3	64°23.2	1.1	Port Menier on-top. No lites. Norwa signal fading.
0618	(244)	(99.5)				(240)	(100)	0.5	Presque Isle 100 miles.
0633	(224)	(96.2)				(225)	(95)	1.2	Bangor 95 miles. No more Norway.
0641	(221)	(41.6)				(218)	(40)	1.6	Bangor 40 miles.
0656	44°48.8	68°48.4				44°48.0	68°50.0	1.1	Landing. Bangor. No lites.

Sequence #19

OMEGA VERSUS LORAN AND VOR/DME

FLT # W0314C

Time	Omega Position		LORAN Data	LORAN Position		VOR/DME Position		Radial Error N.Miles	Comment
	Latitude (BRG)	Longitude (RNG)		Latitude	Longitude	Latitude (BRG)	Longitude (RNG)		
1937	N44°48.3	W068°50.6				N44°48.0	W068°50.0	0.5	Takeoff. Bangor. Only receiving North Dakota and Trinidad.
2000	46°48.8	68°03.1				46°46.5	68°05.7	2.9	Presque Isle on-top. No Norway received yet.
2006	--	--				--	--	--	Ambiguity on. Received a Norway 10.2 signal.
2036	50°22.0	66°09.5				50°13.9	66°16.3	9.2	Sept-Iles on-top. Still ambiguous. No Norway.
2045	(254)	(39.8)				(255)	(40)	0.2	Sept-Iles 40 miles back. Received Norway. Ambiguity off.
2055	51°54.0	63°17.2				51°51.3	63°16.8	2.8	Lake Eon on-top. System normal with 3 stations.
2126	55°27.4	60°11.0				55°27.7	60°13.2	1.3	Hopedale on-top. Small position variance.
2200 2330	--	--				--	--	--	Good navigation enroute. No lites. Small variance.
2341	(99)	(123.4)				(103)	(125)	1.6	Keflavik 125 miles. North Dakota weak.
2350	(109)	(49.7)				(105)	(50)	0.3	Keflavik 50 miles. Not much North Dakota.
2359	--	--				--	--	--	System kicked. Both lites on. Resolved ambiguity. Position okay.
0005	64°02.2	22°44.4				63°59.2	22°36.6	4.6	Touchdown. Keflavik. In difference frequency.
0009	--	--				--	--	2.5	At ramp. Still in difference frequency. Not much North Dakota.

Sequence #18

FLT # 1231B

OMEGA VERSUS LORAN AND VOR/DME

Time	Omega Position		LORAN Data	LORAN Position		VOR/DME Position		Radial Error N.Miles	Comment
	Latitude (BRG)	Longitude (RNG)		Latitude	Longitude	Latitude (BRG)	Longitude (RNG)		
1620	N52°18.1	E004°45.0				N52°19.0	E004°46.0	1.4	Takeoff. Amsterdam. Norway only. In Diff Freq
1715	55°44.9	W003°20.9				55°29.9	W003°21.0	14.9	Talla on top. Norway off 15 mins. In Diff Freq and ambiguous
1726	55°26.5	05°41.3				-	-	-	Machrilanish. "A" fix. Getting 3 stations. Lites out. System agrees with Loran enroute. No lights.
2153	53°19.2	60°27.8				53°18.0	60°27.6	1.2	Goose Bay on top. Landfall. Still receiving 3 stations.
2235	50°14.0	66°14.5				50°13.9	66°16.5	1.3	Sept Iles on top. Norway fading.
2254	48°21.7	68°21.8				48°31.5	68°22.4	0.4	Mont Joli on top. Only Trinidad and North Dakota now.
2329	45°19.6	71°48.6				45°19.0	71°47.3	1.1	Sherbrooke on top.
0205						40°38.0	73°46.4	13.6	Touchdown. New York. In holding holding pattern 90 mins. Some Hawaii came in. In Diff Freq.

OMEGA VERSUS LORAN AND VOR/DME

Sequence #17
FLT # 1228

Time	Omega Position		LORAN Data	LORAN Position		VOR/DME Position		Radial Error N.Miles	Comment
	Latitude (BRG)	Longitude (RNG)		Latitude	Longitude	Latitude (BRG)	Longitude (RNG)		
2330	N33°56.5	W118°24.5				N33°56.0	W118°24.0	0.7	Takeoff. Los Angeles. Only receiving Hawaii & No. Dakota.
0028	38°26.3	113°00.9				---	---	---	Milford. "B" Fix. Getting some Trinidad now.
0035	39°20.6	112°30.7				39°18.2	112°30.3	2.4	Delta on top. In diff. freq. and amiguous
0124	43°56.3	106°29.4				44°00.0	106°26.1	4.3	Crazy Woman on top. Inside North Dakota limit. In Diff Freq.
0241	50°54.5	93°57.1				51°04.4	93°45.5	12.3	Red Lake, Ont. On top. Outside North Dakota now. In Diff Freq
0354	55°18.3	77°47.4				55°17.1	77°45.1	1.8	Poste-Baleine On top. Still in Diff Freq. Variance decreasing
0500	58°30.4	62°34.0				-	-	-	Saglek "A" Fix. Hawaii out. Getting Norway now.
0520 0555									North Dakota off 30 minutes. Resolved after. No lites enroute
0830	(140)	(99.4)				(140)	(100.0)	0.6	Glasgow DME 100 miles. Still receiving 3 stations. No lites.
0842	55°42.3	04°22.0				55°42.0	04°21.0	0.6	Glasgow on top. Landfall. No lites.
0940	52°15.3	E004°45.8				52°19.0	E004°46.0	3.8	Touchdown. Amsterdam. In Diff Freq. and ambiguous.
									No Trinidad or North Dakota.

Sequence #16

FLT # 1210D

OMEGA VERSUS LORAN AND VOR/DME

Time	Omega Position		LORAN Data	LORAN Position		VOR/DME Position		Radial Error N.Miles	Comment
	Latitude (BRG)	Longitude (RNG)		Latitude	Longitude	Latitude (BRG)	Longitude (RNG)		
1359	N48°08.1	E016°33.9				N48°07.3	E016°33.6	0.9	Takeoff. Vienna. Only receiving Norway.
1444	49°35.4	10°39.9				49°31.0	10°49.0	7.4	Nuremberg on top. Little Trinidad now. In diff. freq.
1613	53°23.9	W003°26.5				---	---	---	Wallassey. "A" Fix. Starting to get North Dakota now.
1629	53°29.8	06°17.1				53°30.0	06°18.0	0.6	Dublin on top. System resolved. No lites. Getting North Dakota.
									System close to LORAN. No lights enroute. Small Variance.
2105	53°18.8	60°27.0				53°19.0	60°25.0	1.2	Touchdown. Goose Bay. Still receiving 3 sta'ns. No lights.

Sequence #15

FLT # 1210A

OMEGA VERSUS LORAN AND VOR/DME

Time	Omega Position		LORAN Data	LORAN Position		VOR/DME Position		Radial Error N.Miles	Comment
	Latitude (BRG)	Longitude (RNG)		Latitude	Longitude	Latitude (BRG)	Longitude (RNG)		
0151	N44°47.5	W068°49.7				N44°48.0	W068°50.0	0.5	Takeoff. Bangor.
0227	46°09.5	63°14.2				---	---	---	Charletown. "A" Fix. Norway signal coming in now.
0248	(086)	(173.0)				(088)	(172)	1.0	Gander DME 172 miles. In diff. frequency.
0300	(060)	(77.8)				(060)	(76.5)	1.3	Gander DME 76.5 miles. In diff. frequency and ambiguous.
0406	50°58.0	40°00.0				---	---	---	"B" Fix off doppler. Airstart system resolved. All lights off.
0601	(106)	(98.1)				(105)	(100)	1.9	Cork DME 100 miles.
0612	51°49.3	08°27.7				51°50.4	08°29.6	1.6	Cork on top. Landfall. No lights since airstart.
0630	50°07.0	05°34.6				50°08.2	05°38.2	2.6	Lands End on top.
0654	49°08.6	00°24.4				49°10.3	00°27.3	2.6	Caen on top.
0728	47°42.1	E 06°20.1				47°41.0	E06°18.0	1.8	Luxeil on top.
0749	47°27.6	08°29.7				47°28.0	08°33.0	2.3	Touchdown. Zurich. No lights. Still receiving 3 stations.

Sequence #14

FLT #W1017B

OMEGA VERSUS LORAN AND VOR/DME

Time	Omega Position		LORAN Data	LORAN Position		VOR/DME Position		Radial Error N.Miles	Comment
	Latitude (BRG)	Longitude (RNG)		Latitude	Longitude	Latitude (BRG)	Longitude (RNG)		
1350	N48°57.8	E02°27.0				N48°57.8	E02°27.0	0	Paris. Takeoff. No sync.
1457	51°50.0	W08°30.0				--	--	--	Cork. "B" Fix
1837	48°52.6	54°32.3				48°54.0	54°32.1	1.4	Gander. Landfall
2028	43°24.5	70°44.6				43°25.5	70°36.9	5.7	Kennebunk
2050	42°26.2	70°54.0				42°22.0	71°00.0	6.1	Boston. Touchdown

Sequence #13

FLT # W1017A

OMEGA VERSUS LORAN AND VOR/DME

Time	Omega Position		LORAN Data	LORAN Position		VOR/DME Position		Radial Error N.Miles	Comment
	Latitude (BRG)	Longitude (RNG)		Latitude	Longitude	Latitude (BRG)	Longitude (RNG)		
0434	N38°57.0	W077°27.0				N38°57.0	W077°27.0	0	Dulles. Takeoff
0532	43°25.5	70°36.9						--	Kennebunk. "B" Fix
0653	49°00.2	54°30.9				48°54.0	54°32.1	3.9	Gander
1051	53°32.3	03°13.9				53°24.0	03°08.0	9.1	Wallassey. Landfall
1146	49°03.8	E02°25.1				48°57.8	E02°27.0	6.2	Paris. Touchdown

Sequence #12

FLT # W1013C

OMEGA VERSUS LORAN AND VOR/DME

Time	Omega Position		LORAN Data	LORAN Position		VOR/DME Position		Radial Error N.Miles	Comment
	Latitude (BRG)	Longitude (RNG)		Latitude	Longitude	Latitude (BRG)	Longitude (RNG)		
1303	N52°21.0	E 04°46.2				N52°19.0	E04°46.0	2.0	Amsterdam. Takeoff
1338	51°09.6	W 00°27.8				51°03.0	00°37.0	8.8	Midhurst. Only receiving Norway.
1403	50°08.2	05°38.2				--	--	--	Lands End. "A" Fix
1851	43°59.3	60°08.0				43°56.0	60°01.0	6.0	Sable Island. Landfall.
2003	(269)	(85.8)				(270)	(90)	4.2	Hampton 90 miles. Only receiving Trinidad & North Dakota
2023	(241)	(102.5)				(240)	(100)	2.5	Sea Isle 100 miles
2037	(276)	(75.6)				(277)	(75)	0.6	Baltimore 75 miles
2042	(276)	(51.2)				(276)	(50)	1.2	Baltimore 50 miles
2100	39°10.8	76°38.6				39°10.2	76°39.7	1.0	Baltimore. Touchdown

OMEGA VERSUS LORAN AND VOR/DME

Sequence #11
FLT # W1012B

Time	Omega Position		LORAN Data	LORAN Position		VOR/DME Position		Radial Error N.Miles	Comment
	Latitude (BRG)	Longitude (RNG)		Latitude	Longitude	Latitude (BRG)	Longitude (RNG)		
1143	N39°59.4	W075°37.4				N40°00.5	W075°35.8	2.0	McGuire AFB. Takeoff
1230	(056)	(114.8)				(052)	(100)	14.8	Bangor 100 miles. No signal on climbout.
1242	44°31.8	69°22.4						--	Bangor. "A" Fix. Outside New York limit now.
1328	49°00.7	61°54.8				49°05.1	61°42.1	9.4	Heath Point. Norway coming in now.
1358	51°35.2	56°04.8				51°32.8	55°55.6	6.3	St. Anthony
1726	54°25.6	05°58.7				54°29.6	05°51.9	5.7	Belfast. Landfall. Only receiving Norway now.
1732	54°00.4	04°52.8				54°04.0	04°46.0	5.4	Isle of Man
1754	53°33.2	E00°02.6				53°41.0	E00°06.0	9.4	Ottringham
1837	(171)	(68.7)				(165)	(80)	11.3	Frankfurt 80 miles
1858	49°50.0	08°5[illegible].2				50°02.0	08°34.0	15.9	Frankfurt. Touchdown

Sequence #10

OMEGA VERSUS LORAN AND VOR/DME

FLT #W1011A

Time	Omega Position		LORAN Data	LORAN Position		VOR/DME Position		Radial Error N.Miles	Comment
	Latitude (BRG)	Longitude (RNG)		Latitude	Longitude	Latitude (BRG)	Longitude (RNG)		
1504	N36°41.1	W04°31.5				N36°40.0	W04°30.0	1.6	Malaga. Takeoff. No sync
1545	38°40.0	08°37.0						--	Marateca. "A" Fix. No signal on climbout. Getting Norway now.
1730	(244)	(89.5)				(240)	(89)	0.5	Lajes 89 miles abeam
1753	(142)	(159)				(140)	(156)	3.0	Lajes 156 miles behind
2058	43°55.9	60°04.1				43°56.0	60°01.0	2.2	Sable Island. Landfall
2127	(308)	(177.8)				(305)	(180)	2.2	Bangor 180 miles. Only Trinidad and North Dakota now.
2137	(307)	(99.5)				(305)	(100)	0.5	Bangor 100 miles Start descent.
2201	44°42.4	68°50.4				44°48.5	68°50.2	6.1	Bangor. Touchdown. Error was 2.8 crossing VOR.

Sequence #9

FLT # W1010A

OMEGA VERSUS LORAN AND VOR/DME

Time	Omega Position		LORAN Data	LORAN Position		VOR/DME Position		Radial Error N.Miles	Comment
	Latitude (BRG)	Longitude (RNG)		Latitude	Longitude	Latitude (BRG)	Longitude (RNG)		
1320	N40°38.5	W073° 47.8				40°37.8	73°46.3	1.3	Takeoff. Field coordinates JFK
1350	41°16.9	70°01.6						--	Nantucket. "A" Fix. No signal on climbout
1406	43°56.0	60 01.0						--	Sable Island. "A" Fix. North Dakota off at 1400
1856	43°06.0	08°34.9				42°55.6	08°25.6	12.5	Santiago. Landfall. Only receiving Norway now.
1937	40°37.3	03°47.5				40°28.0	03°34.0	13.8	Madrid. Touchdown

Sequence #8

FLT # W 0112

OMEGA VERSUS LORAN AND VOR/DME

Time	Omega Position		LORAN Data	LORAN Position		VOR/DME Position		Radial Error N.Miles	Comment
	Latitude (BRG)	Longitude (RNG)		Latitude	Longitude	Latitude (BRG)	Longitude (RNG)		
1436	N46°13.7	E006° 06.1				N46° 13.7	E006° 06.2	0.1	Takeoff. Field Coordinates. Geneva.
1617								--	Montdidier. "A" Fix Norway and Trinidad only.
1651								--	Lichfield. "A" Fix.
1658								--	Wallassey. "A" Fix
1707	54 03.3	W004° 41.0				54 04.0	W004° 46.0	2.4	Isle of Man on top.
1713									Belfast. "A" Fix Norway and Trinidad only.
2123	53 37.0	57 02.6				53 44.0	56 58.0	7.5	Cartwright. "B" Fix Receiving New York
2219	49 50.3	64 22.7				49 50.0	64 17.0	3.7	Port Menier on top. Three stations coming in.
2259	46 44.9	68 02.7				46 46.4	68 05.8	2.6	Presque Isle on top.
2336	43 25.2	70 36.3				43 25.5	70 36.8	0.4	Kennebunk on top. Inside New York limit. Norway faded.
2358	42 26.7	70 48.7				42 21.5	71 00.0	9.9	Touchdown. Field coordinates. Boston. Trinidad only.

Sequence #7

OMEGA VERSUS LORAN AND VOR/DME

FLT # W0109C

Time	Omega Position Latitude (BRG)	Omega Position Longitude (RNG)	LORAN Data	LORAN Position Latitude	LORAN Position Longitude	VOR/DME Position Latitude (BRG)	VOR/DME Position Longitude (RNG)	Radial Error N.Miles	Comment
1221	N52° 18.0	E004° 48.7				N52° 18.0	E004° 46.0	1.7	Takeoff. Field Coordinates. Amsterdam Schiphol
1255	(270)	(97.9)				(269)	(100.0)	2.1	Wallassey 100 miles. Norway and Trinidad only.
1309	53 26.6	W003° 19.1				53 24.0	W003°08.0	7.1	Wallassey on top. Very little Trinidad.
1323	53 24.9	06 08.1				53 30.0	06 18.0	7.8	Dublin on top.
1342	54 16.0	10 03.0						--	Eagle. "A" Fix Strong Norway, weak Trinidad
1554	57 09.3	40 04.9	1L2 7110 1L4 2340 1L5 4040	57 17.0	40 15.0			9.5	Only Norway and Trinidad. LORAN
1717	54 05.7	58 18.5				53 44.0	56 58.0	52.3	Cartwright on top. Still only Norway and Trinidad.
1809	49 50.2	64 23.2						--	Port-Menier. "A" Fix Getting New York now, Norway faded.
1843	46 48.4	68 05.3				46 46.4	68 05.7	2.0	Presque Isle on top. Trinidad and New York only.
1902	(225)	(98.6)				(233)	(100.0)	1.4	Kennebunk 100 miles. Inside New York limit. Trinidad only.
2009	40 21.2	74 59.5				40 37.8	73 46.3	58.2	Touchdown. Field Coordinates. Kennedy.

Sequence #6

FLT #W0109A

OMEGA VERSUS LORAN AND VOR/DME

Time	Omega Position		LORAN Data	LORAN Position		VOR/DME Position		Radial Error N.Miles	Comment
	Latitude (BRG)	Longitude (RNG)		Latitude	Longitude	Latitude (BRG)	Longitude (RNG)		
0140	N44° 48.5	W068° 50.2						--	Takeoff. Bangor
0219								--	Halifax. "A" Fix. New York Incoherent
0222		(114.0)					(112.0)	2.0	Sydney 112 miles.
0244								--	Sydney "A" Fix. Good coherency on Norway, Trinidad and New York
0315	47 29.2	52 50.7				47 28.1	52 51.2	1.2	Saint John on top Good 3 stations. No Hawaii.
0641	51 49.3	06 26.2				51 50.4	08 29.6	2.4	Cork on top. Still getting Norway, Trinidad and New York.
0713	50 51.7	01 42.2				50 53.6	01 44.7	2.5	Ibsley on top.
	51 07.3	E001° 25.5				51 10.0	E001° 21.0	3.9	Dover on top.
0734	51 01.0	02 44.1				51 05.0	02 42.0	4.2	Wulpen on top.
0748	50 33.3	05 44.5				50 35.0	05 43.0	1.9	Olno on top. Still receiving New York.
0826	50 00.1	08 34.2				50 00.2	08 34.0	1.9	Touchdown. Field coordinates Frankfurt.

Sequence #5

FLT # W0107C

OMEGA VERSUS LORAN AND VOR/DME

Time	Omega Position Latitude (BRG)	Omega Position Longitude (RNG)	LORAN Data	LORAN Position Latitude	LORAN Position Longitude	VOR/DME Position Latitude (BRG)	VOR/DME Position Longitude (RNG)	Radial Error N.Miles	Comment
1842	N50° 02.5	E008° 34.5				N50° 02.0	E008°34.0	0.5	Takeoff. Field Coordinates Frankfurt
1956	55 12.8	W001° 21.0				55 01.8	W001°43.0	12.0	Newcastle on top. Norway and Trinidad only.
2009	55 42.0	04 21.0						--	Glasgow. "A" Fix
2049	57 36.0	12 36.0	1L6 1530 1L7 3800	57 32.0	12 45.0			7.1	LORAN
2057	57 57.0	14 30.0	1L6 1740 1L7 3400	57 57.0	14 40.0			5.3	LORAN
2113	58 38.0	18 10.0	1L6 2030 1L7 2600	58 40.0	18 12.0			2.3	LORAN
2130	59 07.0	22 50.0	1L4 4900 1L5 2510 1L6 1880	59 10.0	22 10.0			20.8	LORAN
2145	59 35.0	27 10.0	1L4 4300 1L5 2700	59 20.0	26 45.0			19.7	LORAN
2205	59 56.0	31 46.0	1L4 3300 1L5 3090	59 40.0	32 40.0			31.6	LORAN
2326	56 48.0	53 21.0	1L2 4450 1L3 1150 1L4 1440	56 55.0	53 20.0			7.0	Receiving New York. Still have Norway and Trinidad. LORAN
0039	52 58.5	66 45.5				52 55.0	66 52.0	5.3	Wabush on top Norway faded. Trinidad and N.Y. only.
0119	(259)	(50.0)				(274)	(50.0)	0	Chibougamau 50 miles
0128	49 52.3	74 24.0				49 57.0	74 19.0	5.7	Chibougamau on top. N.Y. limit. Trinidad only

Sequence #5

OMEGA VERSUS LORAN AND VOR/DME

FLT #W0107C (continued)

Time	Omega Position		LORAN Data	LORAN Position		VOR/DME Position		Radial Error N.Miles	Comment
	Latitude (BRG)	Longitude (RNG)		Latitude	Longitude	Latitude (BRG)	Longitude (RNG)		
0151	48 09.9	77 39.4				48 03.4	77 47.6	8.5	Val-Dor on top Some Hawaii in now.
0301	42 34.9	83 03.5				42 13.0	83 21.0	25.4	Touchdown. Field Coordinates. Detroit. Trinidad and Hawaii only.

Sequence #4

OMEGA VERSUS LORAN AND VOR/DME

FLT # W0107A

Time	Omega Position		LORAN Data	LORAN Position		VOR/DME Position		Radial Error N.Miles	Comment
	Latitude (BRG)	Longitude (RNG)		Latitude	Longitude	Latitude (BRG)	Longitude (RNG)		
0611	N39° 59.0	W074° 38.2				N40° 00.6	W074°35.8	2.5	Takeoff, Field Coordinates McGuire AFB
0632	(084)	(106.1)				(088)	(100.0)	6.1	Nantucket 100 miles System Ambiguous
0643	41 16.9	70 01.6						--	Nantucket. "A" Fix
0652	(268)	(98.0)				(270)	(100.0)	2.0	Nantucket 100 miles reverse. System looks good.
0701	(271)	(189.0)				(265)	(191.0)	2.0	Nantucket 191 miles reverse
0729	43 53.7	59 59.3				43 55.9	60 00.7	2.5	Sable Island on top.
0845	47 29.7	42 40.8	1L2 3540 1L3 3320	47 38.0	42 55.0			12.7	LORAN
1145	48 00.2	04 10.3				48 01.0	04 13.8	2.0	Quimper on top Norway and Trinidad only.
1156	48 35.3	02 05.3				48 35.0	02 05.0	0.3	Dinard on top
1209	(098)	(100.3)				(097)	(100.0)	0.3	Bray Surseine 100 miles
1221	48 23.3	E003° 16.7				48 24.0	E003° 18.0	1.1	Bray Surseine on top.
1236	47 40.7	06 18.2				47 41.0	06 18.0	0.3	Luxueil on top
1255	47 28.9	08 30.8				47 28.0	08 33.0	1.7	Touchdown, Field Coordinates Zurich

Sequence #3

FLT # W0106B

OMEGA VERSUS LORAN AND VOR/DME

Time	Omega Position		LORAN Data	LORAN Position		VOR/DME Position		Radial Error N.Miles	Comment
	Latitude (BRG)	Longitude (RNG)		Latitude	Longitude	Latitude (BRG)	Longitude (RNG)		
1458	N50° 02.0	E008° 35.1				N50° 02.0	E008°34.0	0.7	Takeoff. Field Coordinates. Frankfurt
1536	52 41.5	04 38.7				52 32.0	04 51.0	12.1	Spijkerboor on top. Norway and Trinidad only.
1625	54 26.2	W005° 33.1				54 04.0	W004°46.0	35.4	Isle of Man on top.
1631	54 31.3	05 57.0						--	Belfast. "A" fix.
2034	55 31.6	60 28.0				55 27.7	60 13.2	9.3	Hopedale on top Norway, Trinidad and New York
2109	51 53.4	63 21.2				51 51.3	63 16.8	3.4	Lake Eon on top.
2130	50 12.8	66 21.3				50 13.9	66 16.5	3.3	Sept Iles on top.
2149	48 29.6	68 23.4				48 31.6	68 22.3	2.1	Mont Joli on top Trinidad and New York only.
2225	45 12.1	72 13.7				45 19.1	71 47.4	19.8	Sherbrooke on top. Inside New York. Trinidad only.
2339	40 09.1	75 17.6				40 00.6	74 35.8	33.2	Touchdown, Field Coordinates McGuire AFB

Sequence #2

FLT #W0106A

OMEGA VERSUS LORAN AND VOR/DME

Time	Omega Position		LORAN Data	LORAN Position		VOR/DME Position		Radial Error N.Miles	Comment
	Latitude (BRG)	Longitude (RNG)		Latitude	Longitude	Latitude (BRG)	Longitude (RNG)		
0508	N40° 00.9	W074° 36.0				N40° 00.6	W074° 35.8	0.3	Takeoff. Field coordinates. McGuire AFB.
0530	40 53.8	72 22.3				40 55.1	72 19.0	2.8	Hampton on top.
0542	41 43.3	70 15.6				41 42.7	70 13.0	2.0	Hyannis on top.
0605	43 50.5	66 11.2				43 49.5	66 05.0	4.6	Yarmouth on top.
0626	(084)	(99.9)				(077)	(100.0)	0.1	Sydney 100 miles.
0632	(086)	(50.6)				(070)	(50.0)	0.6	Sydney 50 miles.
0638	46 10.7	60 21.6				46 09.2	60 03.4	1.9	Sydney on top.
0653	47 31.0	57 27.1				47 30.7	57 24.6	1.7	Ramea on top.
0747	49 16.2	45 21.7	1L2 3208 1L3 3190 1L4 2320	49 03.0	45 33.0			15.2	LORAN
1018	(092)	(101.1)				(092)	(100.0)	1.1	Cork 100 miles Norway only.
1030	51 47.8	08 22.9				51 50.4	08 29.6	4.9	Cork on top. Late Hack. Error closer to 2.0.
1135	50 32.3	E005°08.6				50 35.0	E005°43.0	22.0	Olno on top.
1145	(083)	(45.7)				(092)	(47.0)	1.3	Frankfurt 47 miles.

Sequence #2

OMEGA VERSUS LORAN AND VOR/DME

FLT # W0106A(continued)

Time	Omega Position		LORAN Data	LORAN Position		VOR/DME Position		Radial Error N.Miles	Comment
	Latitude (BRG)	Longitude (RNG)		Latitude	Longitude	Latitude (BRG)	Longitude (RNG)		
1157	49 53.1	08 38.9				50 02.0	08 34.0	9.5	Frankfurt. Field Coordinates.

Sequence #1

FLT #W 0105

OMEGA VERSUS LORAN AND VOR/DME

Time	Omega Position Latitude (BRG)	Omega Position Longitude (RNG)	LORAN Data	LORAN Position Latitude	LORAN Position Longitude	VOR/DME Position Latitude (BRG)	VOR/DME Position Longitude (RNG)	Radial Error N.Miles	Comment
0810	N40°01.0	W074° 34.7				N40°00.6	W074°35.8	0.9	Takeoff. Field Coordinates McGuire AFB
0824	(062)	(52.0)				(061)	(50.0)	2.0	Hampton 50 miles.
0836	(072)	(52.1)				(062)	(50.0)	2.1	Hyannis 50 miles.
0842	41 42.6	70 12.8				41 42.7	70 13.0	0.2	Hyannis on top.
0923	(085)	(100.7)				(081)	(100.0)	0.7	Sydney 100 miles.
0934	46 08.5	60 03.6				46 09.2	60 03.4	0.7	Sydney on top.
1004	47 31.8	52 42.3				47 29.1	52 51.2	6.6	Memory check sum failure Saint John on top.
1030	49 34.4	47 53.9	1L2 2800 1L3 3080	49 53.0	48 05.0			20.0	LORAN
1056	51 11.5	42 30.8	1L2 4400 1L3 2627	51 45.0	43 25.0			47.6	LORAN
1322	(103)	(92.8)				(105)	(100.0)	7.2	Cork 100 miles Norway and Trinidad only.
1334	51 42.8	08 22.3				51 50.4	08 29.6	8.9	Cork on top.
1405	50 43.3	01 24.1				50 53.6	01 44.7	16.6	Ibsley on top.
1419	51 00.7	E001° 34.6				51 10.0	E001° 21.0	12.7	Dover on top.

Sequence #1

FLT # W0105 (continued)

OMEGA VERSUS LORAN AND VOR/DME

Time	Omega Position		LORAN Data	LORAN Position		VOR/DME Position		Radial Error N.Miles	Comment
	Latitude (BRG)	Longitude (RNG)		Latitude	Longitude	Latitude (BRG)	Longitude (RNG)		
1452	(052)	(23.2)				(073)	(30.0)	6.8	Frankfurt 30 miles.
1506	49 46.3	09 01.1				50 02.0	08 34.0	23.6	Frankfurt, Field Coordinates.

APPENDIX D

This appendix is the Operational Manual used by system operators during the test program.

OPERATIONAL INSTRUCTIONS

OMEGA NAVIGATION SET

WORLD/FAA DC-8

Northrop Corporation Electronics Division
2301 West 120th Street Hawthorne, California 90250

NORTHROP

CONTENTS

Section		Page
1.0	GENERAL OMEGA SYSTEM DESCRIPTION	1-1
2.0	AN/ARN-99 EQUIPMENT	2-1
3.0	CONTROL/INDICATOR PANEL DESCRIPTION	3-1
4.0	SYSTEM OPERATION	4-1
	4.1 Power On/Initialization	4-1
	4.2 Input Functions	4-1
	4.3 Navigational Output Functions	4-7
	4.4 Status Output Functions	4-11
	4.5 C/I Procedures Short Form	4-15

1.0 GENERAL OMEGA SYSTEM DESCRIPTION

OMEGA is a radio navigation system which uses eight broadcasting transmitters spotted over the globe. Figure 1.1 shows four of the stations presently in operation as well as the locations of the other four. Since the system is designed to use all eight broadcasting stations, this description will assume that all eight are built and operating. Figure 1.2 shows the current status of the stations.

Each of the eight stations transmits a sequence of three CW pulses, hereafter referred to as "bursts". The first burst will be on 10.2 kHz, the second on 13.6 kHz and the third on 11-1/3 kHz. The duration of each burst is about one second; specifically the total span of a burst varies between 0.9 and 1.2 seconds with a non-transmission time between bursts of 0.2 second. After the third burst the station will not transmit for about 6-1/2 seconds. This OMEGA transmission pattern repeats every 10 seconds.

Figure 1.3 shows the specific synchronization relationships between stations. The eight stations are represented as letters A through H on the left of the transmission pattern and pulse length is represented in seconds across the top. The separation line between bursts represents the 0.2 second period of non-transmission. Notice that at any point in time (except during the 0.2 second off-time) there are three bursts being transmitted, one from each of three stations, one on each of the three frequencies. To receive the simultaneous bursts on each of the three frequencies, the Airborne OMEGA system uses not one, but three receivers, each tuned to one of the OMEGA frequencies.

Thus there are eight stations and three frequencies; 24 bursts in each 10-second period. How are the frequencies and bursts related? First, each OMEGA transmitting station uses an atomic clock to generate all three frequencies. Each frequency is time-synchronized, which here means that for each station and each frequency the representative sinusoid will rise from zero at universal time-zero. This not only synchronizes the eight transmitters to time but to each other as well.

Second, the CW burst pattern must be fixed in time. This is done by the logic gates that permit a frequency to reach the antenna and become a transmitter burst. Once the opening gate for any burst from any station is fixed in time then the entire pattern is fixed and predictable at every moment. The gat from Station A, Norway, on 10.2 kHz begins at universal time-zero.

Each receiver uses a reference oscillator to measure the difference in phase between itself and the incoming CW bursts. This oscillator is not as precise as the atomic clock of the transmitting stations, and thus may drift a bit. Also, when the OMEGA receiver is turned on the oscillator zero time is unknown. However, the fact that the receiver oscillator is not time-synchronized to universal time zero is unimportant, for either the measurements from two station can be differenced, thus subtracting out the arbitrary oscillator

zero time, or the error in receiver oscillator zero time can be calculated, its drift measured and tracked, thereby permitting single station phase measurements.

Position fixing by the first method, using two-station, difference measurements, is referred to as hyperbolic navigation; position fixing by the second, which uses the phase measurements from each station, is called circular or rho-rho navigation. The Northrop Airborne OMEGA system uses rho-rho navigation once the error in oscillator start time has been calibrated.

OMEGA TRANSMITTER LOCATIONS

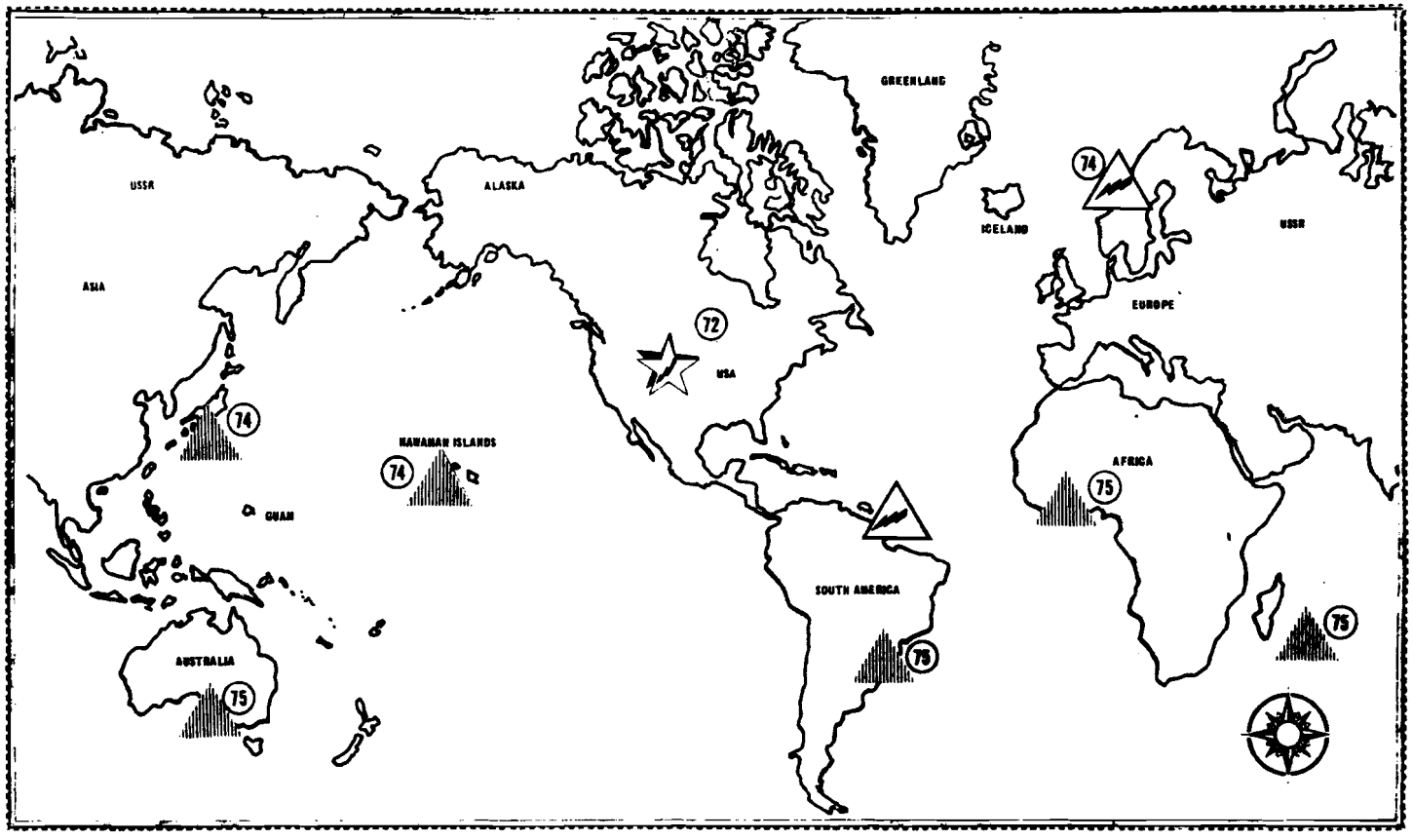

CURRENTLY TRANSMITTING

FULL POWER

FULL POWER DATE

PARTIAL POWER

FUTURE/UPGRADED TRANSMITTER LOCATIONS

73-649B

FIGURE 1.1

STATION	STATUS	FULL POWER DATE	COMMENTS
A - NORWAY 66°25.3' N 13°09.2' E	OFF FOR UPGRADING	12-73	
B - TRINIDAD 10°42.1' N 61°38.3' W	SEMI-OPERATIONAL 1 KW OUTPUT POWER		MOVES TO LIBERIA 3-75 06°18.2' N 10°39.7' W
C - HAWAII 21°24.3' N 157°49.8' W	OFF FOR UPGRADING	6-74	
D - NO. DAKOTA 46°21.9' N 98°20.1' W	OPERATIONAL	10-72	
E - LA REUNION TBD	ENGINEERING STARTED	1-75	
F - ARGENTINA 43°03.2' S 65°11.5' W	AGREEMENT NEGOTIATED	3-75	
G - AUSTRALIA TBD	PLANNED	12-75	
H - JAPAN 34°36.9' N 129°27.2' E	UNDER CONSTRUCTION	4-74	

FIGURE 1.2 OMEGA TRANSMITTER STATUS

Omega TRANSMISSION FORMAT

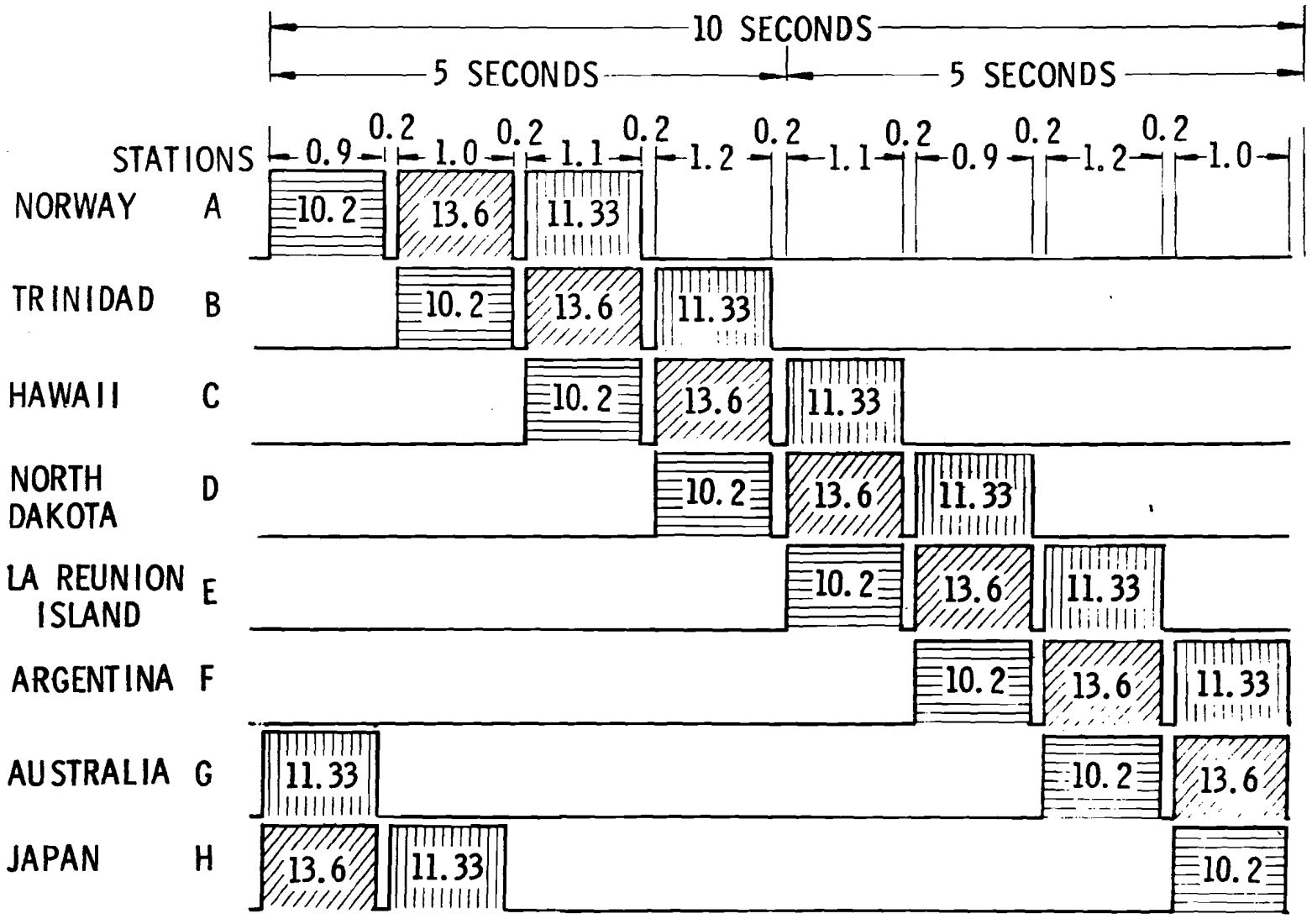

70-1695C

FIGURE 1.3

2.0 AN/ARN-99 EQUIPMENT

The OMEGA Navigation Set consists of the following three units.

RECEIVER/COMPUTER
CONTROL/INDICATOR PANEL
NOLA II LOOP ANTENNA

Input power and rate-aid information are supplied by the aircraft as shown in the simplified block diagram.

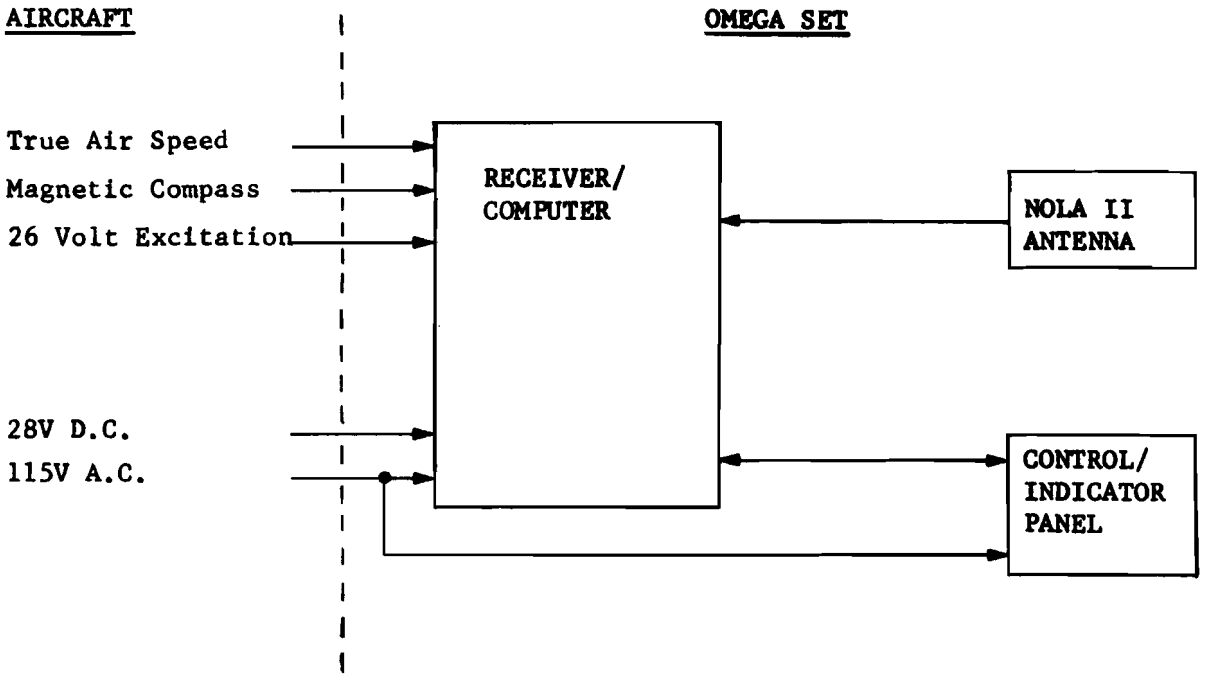

All control of the system, including Input and Output, is achieved through the Control/Indicator Panel. The panel layout is shown in Figure 2.1. The remainder of this document will describe the C/I panel and operation of the set.

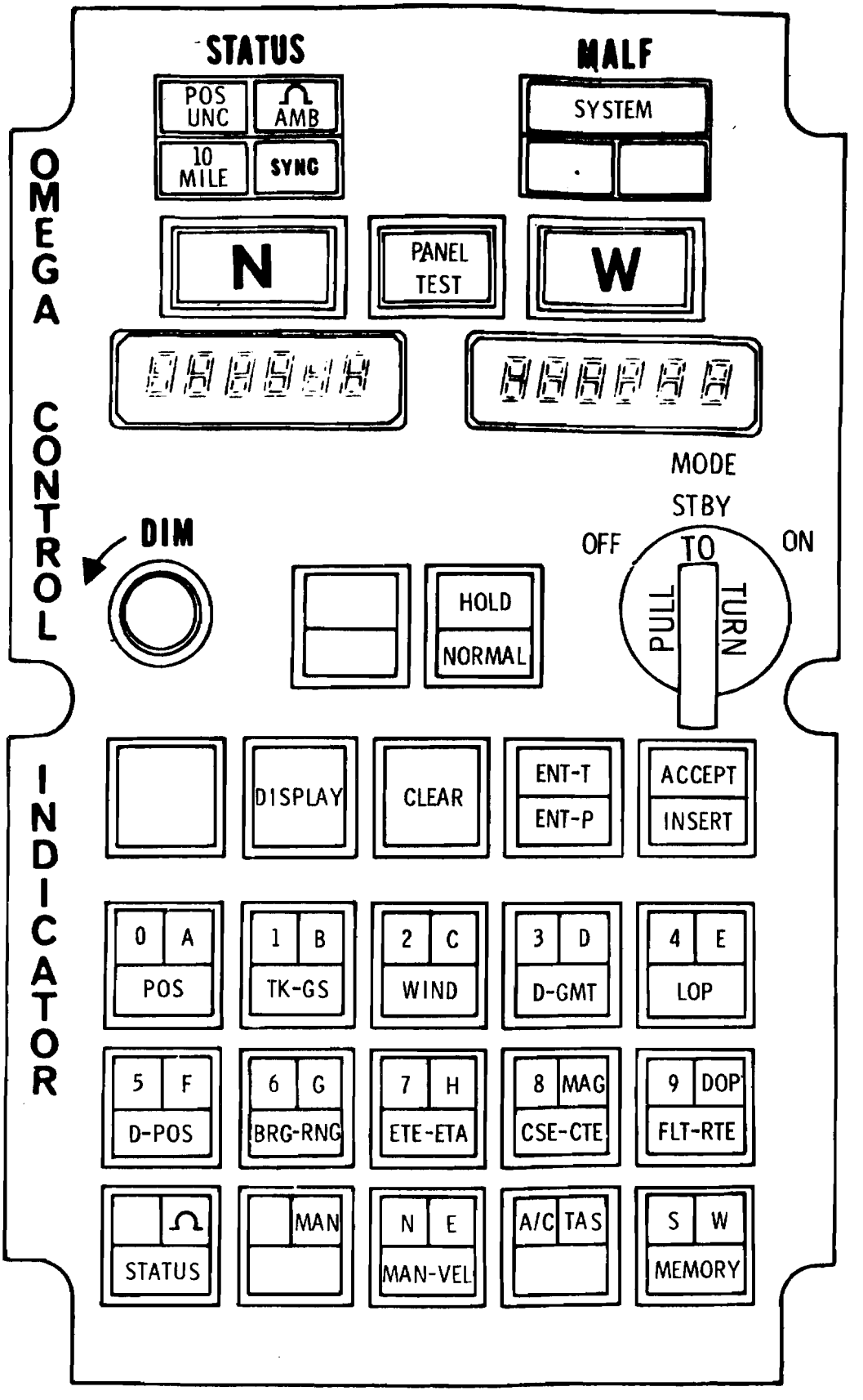
STATUS
MALF
POS UNC
AMB
10 MILE
SYNC
SYSTEM
OMEGA CONTROL INDICATOR
N
PANEL TEST
W
MODE
STBY
OFF
TO
ON
PULL
TURN
DIM
HOLD
NORMAL
DISPLAY
CLEAR
ENT-T
ENT-P
ACCEPT
INSERT
0 A
POS
1 B
TK-GS
2 C
WIND
3 D
D-GMT
4 E
LOP
5 F
D-POS
6 G
BRG-RNG
7 H
ETE-ETA
8 MAG
CSE-CTE
9 DOP
FLT-RTE
STATUS
MAN
N E
MAN-VEL
A/C TAS
S W
MEMORY

FIGURE 2.1

3.0 CONTROL/INDICATOR PANEL DESCRIPTION

3.1 MODE

The MODE switch is a 3-position, "Pull to Turn," rotary switch which controls power input to the system. In the STBY (Standby) position only 28 volt D.C. power is applied to the heater circuit of the reference oscillator. The heater circuit temperature stabilizes the oscillator to ensure an accurate frequency reference. In the ON position 115 volt A.C. power is applied to the Receiver/Computer and the C/I Panel. The computer begins its initialization process at this time.

3.2 MALF

The only malfunction indicator used on the C/I Panel is the SYSTEM indicator. This is a red indicator and it will be on any time a system failure has been detected by the Self-Test routine. Once set the SYSTEM indicator will remain on until power is cycled or the PANEL TEST switch is actuated (See PANEL TEST). A fault isolation routine denoting the type of failure exists in the program (See Page 4-14 for the procedure).

Two additional malfunction indicators are located on the front of the Receiver/Computer. The first is the BITE (Built-In-Test-Equipment) indicator which will be set to a red state in parallel with the SYSTEM indicator when Self-Test detects a failure. The BITE indicator can only be reset manually. The second indicator is POWER MALF, a red bulb which will be on when the computer power supply fails.

3.3 STATUS

3.3.1 SYNC

This indicator comes on after initialization. It means that the system is in the process of synchronization to the OMEGA signal pattern. Under normal signal conditions this process will be completed in less than 2 minutes whereupon the indicator will go off. It will remain off until power is cycled or a failure of the oscillator is detected.

3.3.2 Ω AMB

This is the OMEGA Ambiguity indicator and it will be on whenever more than one estimate of position exists in the system. Its normal implication is that signal reception is insufficient to completely resolve position. It also may be on initially if the system has more than one estimate of oscillator starting time.

3.3.3 POS UNC

This is the Position Uncertainty indicator and it will be on whenever position variance is greater than 4 miles. The system operates in the Difference Frequency mode during this time. The indicator also is on initially until the oscillator is calibrated.

3.3.4 10 MILE

This indicator has no function in the present program and will remain off.

3.4 PANEL TEST

Actuation of this switch causes a signal to be sent to the computer. The computer executes a routine whereby all indicators and switches are illuminated for 2 seconds. The routine then commands the legend displays to cycle through each of their alpha characters. The panel is then returned to its quiescent state.

A secondary function of this switch is to reset the SYSTEM malfunction indicator. If, at the completion of the Panel Test routine, the indicator remains off the detected failure is of a one-time or an intermittent nature. The indicator will remain off until Self-Test has detected another failure. If the indicator remains on the failure is of a hard type.

3.5 LEGEND AND SEGMENT DISPLAYS

The two Legend displays contain alpha characters and are used in conjunction with the numeric characters of the Segment displays to define data outputs.

3.6 DIM

This is a potentiometer used to vary light intensity on the C/I Panel.

3.7 SWITCH/INDICATORS

The remainder of the C/I Panel is composed of switch/indicators, most of which are multi-function types and are completely under program control. In all input or output procedures the program illuminates all valid switches in sequence. Actuation of any invalid or dark switch will result in the panel being cleared and returned to its "quiescent" state. The

quiescent state of the panel is defined as the Legend and Segment displays blanked out and the NORMAL, DISPLAY, CLEAR and INSERT switch/indicators on. The STATUS and MALF indicators will remain in their previous state. In effect, actuation of an invalid switch will be identical to actuation of the CLEAR switch, which is described below.

3.7.1 HOLD/NORMAL

This is a 2 position switch that controls certain output displays. In the NORMAL position the displays are updated at their usual rate. In the HOLD position these displays are frozen or held until the switch is returned to NORMAL. The HOLD function is used for data taking purposes at points of interest (on-top marks, terminal position, etc.).

3.7.2 DISPLAY

This switch initiates all output data displays to the panel. Actuation of this switch results in all valid lower keyboard indicators being illuminated. The specific display is selected at this point. (See Outputs for individual procedures)

3.7.3 CLEAR

This switch is used to clear out erroneously entered data from the Legend and Segment displays during data input procedures. Actuation of this switch will return the panel to its quiescent state.

3.7.4 ENT-T/ENT-P

This switch is used only as an indicator and has no switching function. The ENT-T portion comes on after power on requesting a Date/Time input. Once Date/Time have been entered the indicator will remain off until the next power cycle. The ENT-P portion comes on after completion of the Date/Time input requesting Present Position input. After Present Position has been entered the ENT-P indicator goes off.

3.7.5 ACCEPT/INSERT

This switch/indicator is used to input all data to the system. The INSERT portion initiates all input functions. Actuation of INSERT results in all valid lower keyboard indicators being illuminated. At completion of the input procedure the ACCEPT portion of the switch/indicator will come on. Actuation of ACCEPT results in the input data being accepted by the computer.

3.7.6 Lower Keyboard

The Lower Keyboard is comprised of 15 switch/indicators. These are used for numeric input, mode/station selection and output display selection. Their operation, with the exception of MEMORY, will be described in the Input/Output procedures. The MEMORY indicator is used to display computer memory locations for checkout purposes. In the present program the DOP and FLT-RTE indicators have no function.

4.0 SYSTEM OPERATION

4.1 POWER ON/INITIALIZATION

Power to the system is applied by setting the MODE switch to the STBY position whereby 28V D.C. power is applied to the heater circuit. Approximately 3 to 5 minutes are required for temperature stabilization from a cold start. Setting the switch to the ON position applies 115V A.C. power to the rest of the system which starts the initialization process.

The computer automatically begins a system self-test routine whereby the Computer, Input/Output, and Receiver portions of the system are tested. This routine takes about 6 seconds. Successful completion of self test is indicated by the MALF SYSTEM indicator remaining off. The SYNC indicator comes on at this time and the panel is set to its quiescent state with the ENT-T indicator also on. This initialization process will occur every time power is cycled, with a ground to airborne (or vice versa) power transfer being most common occurrence.

4.2 INPUT FUNCTIONS

4.2.1 Date and Time (D-GMT)

The system requires an initial Julian Date and Zulu Time input for OMEGA signal propagation prediction purposes. The time input itself does not necessarily have to be accurate (within a few minutes of actual time). However, if accurate ETA and Time output displays are desired the actual time should be inserted. Date/Time is a one-time input and is only valid after initialization, i.e., ENT-T indicator is on.

There are 2 options available for Date/Time insert. The first is so-called Old Time which is defined as the last date and time stored in computer memory at the previous power off condition. If power to the system has been off only a short time, such as in a power transfer or power dropout condition, Old Time would still be accurate and valid as an input. Input procedure is as follows.

Switch	Indications
1) INSERT	All Valid Input Functions.
2) D-GMT	Old Time Displayed in Segments; 0, 1, 2, ... 9; ACCEPT.
3) ACCEPT	Time Display; D-GMT; ENT-T Off; ENT-P On.

The second option is New Time which would be inserted after a "cold start" condition when the computer has been off for a long period and Old Time is inaccurate. Procedure is as follows.

Switch	Indications
1) INSERT	All Valid Input Functions.
2) D-GMT	Old Time Displayed in Segments; 0, 1, 2, ... 9; ACCEPT.
3) XX XX XX (YR) (MO) (DATE) XX XX XX (HR)(MIN) (SEC)	12 Digits Representing Julian Date And Zulu Time; ACCEPT
4) ACCEPT	Time Display; D-GMT; ENT-T Off; ENT-P On.

4.2.2 Present Position (POS)

After Date/Time has been entered the ENT-P indicator comes on requesting present position input. In addition to latitude and longitude a quality of the known position accuracy is required. There are 3 types of quality inputs. These are defined as:

'A' Quality - Known position accuracy of 0.5 miles

'B' Quality - Known position accuracy of 5.0 miles

'C' Quality - Known position accuracy of 36.0 miles

NOTE: Three frequencies from three stations are needed to resolve a 'C' quality input. If Norway, which presently only transmits two frequencies, is the third station a 'C' quality cannot be resolved.

Position stored in memory at previous power off is displayed at the beginning of the input routine and is available for use if the position is still accurate. The program automatically assigns a 'B' quality to this input. Procedure is as follows.

Switch	Indications
1) INSERT	All Valid Input Functions
2) POS	Previous Position Displayed; N; S; ACCEPT
3) ACCEPT	Position Displayed; POS; ENT-P Off

In most cases, a new position will be entered for present position input. Procedure is as follows:

Switch	Indications
1) INSERT	All Valid Input Functions.
2) POS	Previous Position Displayed; N; S; ACCEPT.
3) N(S)	N(S) In Legend Display; 0, 1, 2, ... 9.
4) XX°XX.X	Latitude In Segment Display; E; W.
5) E(W)	E(W) In Legend Display; 0, 1, 2, ... 9.
6) XXX°XX.X (Leading Zero Needed If Longitude Less Than 100°)	Longitude In Segment Display; A; B; C.
7) A (B, C)	A (B, C); ACCEPT.
8) ACCEPT	Position Displayed; POS; ENT-P Off.

4.2.3 Rate Aid Modes (STATUS)

In the present installation there is one speed and one heading input to the system. These are True Air Speed and Magnetic Compass, both received as synchro inputs. The system uses TAS as a gross tracking filter rate aid and Dead Reckon source. The Mag Compass is used as a navigational input and as an antenna lobe select source.

There are three possible modes of operation in this installation. These are:

TAS Mode

The system uses both the TAS and Mag Compass inputs as rate aids. In the present application the TAS mode is the normal flight mode. The TAS mode is usually activated at the start of takeoff roll (See Checklist). The system begins to use TAS when the synchro input represents 205 knots or higher. Any value below 205 knots will be read in as 150 knots. The 150 knot value is used to rate aid the system in takeoff and landing situations. The Mag Compass is always read in.

MAG Mode

The system uses Mag Compass input and a manually inserted speed as rate aids. The MAG mode is used as the normal ground mode up until start of takeoff roll. The MAG mode is automatically selected by the program when a New Time is entered. Also, the manually inserted speed is forced to zero knots at this time regardless of which mode or manual speed was in force at last power off. The MAG mode also can be used as a backup in event of a TAS failure.

MAN Mode

The system uses both a manually inserted heading and speed as rate aids. The MAN mode will have use as a backup in event of both a TAS and Mag Compass failure or in event of a system A/D failure.

Mode Selection procedure is as follows.

	Switch	Indications
1)	INSERT	All Valid Input Functions
2)	STATUS	Ω; TAS; MAG; MAN.
3)	TAS (MAG, MAN) Desired Mode	Desired Mode; All Others Off; ACCEPT.
4)	ACCEPT	Desired Mode.

4.2.4 OMEGA Station Selection (STATUS)

Any of the available stations may be "disallowed" or "blocked out" from use by the system. Signals from a "disallowed" station will not be used for either synchronization or navigational purposes. Procedure is as follows.

Switch	Indications
1) INSERT	All Valid Input Functions.
2) STATUS	Ω; TAS; MAG; MAN.
3) Ω	A; B; C; D; ACCEPT.
4) A (B, C, D) Disallowed Station	Remaining Stations On; ACCEPT
5) ACCEPT	Allowed Stations.

To enable a previously disallowed station(s) the procedure is the inverse. That is, the station(s) to be enabled is left on before actuating ACCEPT.

4.2.5 Fixpoint Update (POS)

This input is used, if necessary, to update system position anytime after initial Present Position has been inserted. Its usual application is to update or fix position at an on-top mark over a visual or radio checkpoint. The procedure is identical to Present Position insert with the exceptions that the ENT-P indicator is off and the old position is not displayed at the start of the routine. The A, B or C quality of known position accuracy applies as in Present Position insert. The procedure is not repeated.

4.2.6 Destination Position Or Waypoint (D-POS)

A total of 10 Destination Positions or Waypoints can be entered into the system for flight route or any other purpose. These positions provide end points for the output displays of Bearing and Range, Estimated Time Enroute, Estimated Time of Arrival, Course and Cross Track Error. Procedure is as follows.

Switch	Indications
1) INSERT	All Valid Input Functions.
2) D-POS	0, 1, 2, ... 9.
3) X (DP NO.)	N; S.
4) N (S)	0, 1, 2, ... 9.
5) XX°XX.X	Latitude Displayed; E; W.
6) E (W)	0, 1, 2, ... 9.
7) XXX°XX.X	Longitude Displayed; ACCEPT.
8) ACCEPT	Position Displayed; D-POS; X (DP NO.).

4.2.7 Manual Speed And Heading (MAN-VEL)

An estimated speed and true heading can be inserted as back-up rate aids. The values inserted are only used when the system is in the MAG or MAN modes. Procedure is as follows.

Switch	Indications
1) INSERT	All Valid Input Functions.
2) MAN-VEL	0, 1, 2, ... 9.
3) XXX°	True Heading Displayed; 0, 1, 2, ... 9.
4) XXX	Estimated Speed Displayed; ACCEPT.
5) ACCEPT	Heading And Speed; MAN-VEL.

4.3 NAVIGATIONAL OUTPUT FUNCTIONS

The following are descriptions and display procedures for navigational outputs available in the present program. All outputs are initiated by actuation of the DISPLAY switch. This action results in all valid output functions, represented on the lower keyboard, coming on. The switch representing the desired output is then actuated. The first step, actuation of the DISPLAY switch, will not be repeated in the procedures.

4.3.1 Aircraft Position (POS)

The system-derived present position of the aircraft is displayed in latitude and longitude.

Switch	Indications	
1) POS	N(S) XX°XX.X (Lat)	E(W) XXX°XX.X (Long)

4.3.2 Track Angle and Groundspeed (TK-GS)

The track angle is displayed relative to True North. Groundspeed is displayed in knots along track.

Switch	Indications	
1) TK-GS	XXX° (Angle)	XXX (Knots)

4.3.3 Wind Direction and Speed (WIND)

The wind direction is displayed in True angle in the direction from which it is blowing. Speed is displayed in knots. The computation is based on the difference between System Track/Groundspeed and True Air Speed/System True Heading.

Switch	Indications	
1) WIND	XXX° (Angle)	XXX (Knots)

4.3.4 Date and Time (D-GMT)

This display is an updated readback of the initially inserted Julian Date and Zulu Time, and its accuracy is the same as the input accuracy.

Switch	Indications					
1) D-GMT	XX (Yr)	XX (Mo)	XX (Date)	XX (Hr)	XX (Min)	XX (Sec)

4.3.5 Omega Line of Position (LOP)

The lines of position for two station pairs are displayed in Lane Count and percent of lane on any of the three frequencies. This display has little navigational value without an OMEGA chart of the area.

Switch	Indications	
1 LOP	A,B;C,D,E,F,G,H.	
2) XX (Pair #1) XX (Pair #2)	4,5,6	
3) X (4,5,6) Freq. Select 4 = 10.2 kHz 5 = 13.6 kHz 6 = 11.3 kHz	XX (Stat. Pair #1) XXXX.XX (LOP)	XX (Stat. Pair #2) XXXX.XX (LOP)

4.3.6 Destination Position or Waypoint (D-POS)

This display is a readback in latitude and longitude of previously inserted DP's.

Switch	Indications	
1) D-POS	0,1,2, ... 9.	
2) X (0,1,2 ... 9)	N(S) XX°XX.X (Lat)	E(W) XXX°XX.X (Long)

4.3.7 Bearing and Range from Aircraft Position to Destination Point (BRG-RNG)

The bearing from the aircraft to any DP is displayed as a Magnetic Great Circle bearing. The Magnetic Variation value at aircraft position is used in the computation. Range is displayed in nautical miles along the Great Circle.

Switch	Indications	
1) BRG-RNG	A/C; 0,1,2, ... 9.	
2) A/C	0,1,2, ... 9.	
3) X (DP No.)	XXX° (Angle)	XXXXX.X (Miles)

4.3.8 Bearing and Range between any Two Destination Points (BRG-RNG)

The bearing from the first DP to the second DP is displayed as a Magnetic Great Circle bearing. The Magnetic Variation value at the first DP is used in the computation. Range is displayed in nautical miles along the Great Circle.

Switch	Indications	
1) BRG-RNG	A/C; 0,1,2, ... 9.	
2) XY (DP No.'s)	XXX° (Angle)	XXXXX.X (Miles)

4.3.9 Estimated Time Enroute and Estimated Time of Arrival from Aircraft Position to any Destination Point (ETE-ETA)

The estimated time enroute from the aircraft to the selected DP is displayed in minutes with a maximum of 600. The estimated time of arrival is displayed in Zulu (hours and minutes only) and has a maximum delta of 10 hours. Both displays indicate time to overfly the selected DP at the current groundspeed.

Switch	Indications	
1) ETE-ETA	0,1,2, ... 9	
2) X (DP No.)	Min XXX (Enroute)	XXXX (Zulu Arrival)

4.3.10 Course to any Destination Point and Crosstrack Error between any Two Destination Points (CSE-CTE)

The course from the aircraft position to the second selected DP is displayed as Magnetic Great Circle course with drift compensation included. Crosstrack error between any two DPs is displayed as a perpendicular distance in miles right or left of the Great Circle track from the first to the second selected DP. The right or left indication means the direction to which the aircraft must steer to intercept desired track.

Switch	Indications	
1 CSE-CTE	0,1,2, ... 9.	
2 XY (DP No.'s)	XXX° (Angle)	R(L) XXXXX.X (Miles)

4.3.11 Manual Heading and Speed (MAN-VEL)

This display is a readback of previously inserted manual values for rate aid purposes in the MAG or MAN modes. Heading is displayed as True and speed in knots.

Switch	Indications	
1) MAN-VEL	XXX° (Angle)	XXX (Knots)

4.3.12 Displays Affected by NORMAL/HOLD Switch

The data in the following output displays will be held or "frozen" when the NORMAL/HOLD switch is in the HOLD position.

1) Aircraft Position (POS)
2) Track Angle and Groundspeed (TK-GS)
3) Date and Time (D-GMT)
4) Bearing and Range (BRG-RNG)
5) Estimated Time Enroute and Estimated Time Arrival (ETE-ETA)

4.4 STATUS OUTPUT FUNCTIONS

In the present program there are ten various types of outputs, under control of the STATUS switch, which are available for display. These outputs include OMEGA signal strength, acquisition and coherency; system position variance; local Magnetic Variation; synchro input values; and malfunction fault isolation.

All outputs are initiated by actuation, in order, of the DISPLAY switch, STATUS switch and the number code (0 to 9) which represents the desired display. Only the number code will be included in the following description and procedures.

4.4.1 OMEGA Signal Burst Strength, OMEGA Stations in Use and Selected Rate Aid Mode (STATUS 0)

The signal burst strength from the available OMEGA stations is displayed in the segments. The burst strength is a rough signal-to-noise measurement on a scale of 0 to 9. All eight stations are represented although all are not transmitting. The last two digits in the segments represent a noise measurement on the selected frequency. Frequencies are selected by a number code of 4,5,6 representing 10.2 kHz, 13.6 kHz and 11.3 kHz respectively. The stations in use and the selected Rate Aid Mode are displayed on the keyboard.

Switch	Indications
1) 0	4,5,6
2) X (4,5,6) Selected Frequency 4 = 10.2 kHz 5 = 13.6 kHz 6 = 11.3 kHz	X X X X X X X X X X (A)(B)(C)(D) (E)(F)(G)(H)(Noise) Stations in Use (A,B,C,D) Rate-Aid Mode (TAS, MAG, MAN)

4.4.2 OMEGA Signal Acquisitions (STATUS 1)

Signal acquisitions from each OMEGA station on all three frequencies are displayed in the segments. In addition to the acquisitions, a Tracking Filter count and a Tracking Filter variance are also displayed. The signal acquisitions, also referred to as "Kalman Dumps", represent the number of times that the specific frequency from the selected station has been used by the system for navigational measurements. The range of the acquisitions is 00 to 99 and the indicators are reset to 00 when the number exceeds 99. The Tracking Filter count is represented by a single

digit with a range of 0 to 7. The count must increase to 3 or more before an acquisition is made. The Tracking Filter variance is represented by a single digit with a range of 0 to 9. The variance must decrease to 3 or less before a count is made.

The format of the display is:

10.2 kHz				13.6 kHz				11.3 kHz			
K	K	N	V	K	K	N	V	K	K	N	V

K = Signal Acquisitions (00-99)
N = Tracking Filter Counts (0-7)
V = Tracking Filter Variance (0-9)

Procedure:

Switch	Indications
1) 1	A,B,C,D,E,F,G,H
2) X (A,B,C,D) Selected Station	KK NV KK NV KK NV (See Format)

4.4.3 Position Variance (STATUS 2)

The system position variance is displayed in nautical miles North/South and East/West. The North and East indications are not directional.

Switch	Indications	
1) 2	N	E
	XX.X	XX.X

4.4.4 System Heading and Magnetic Variation (STATUS 3)

The system derived heading is displayed in True. Magnetic Variation is displayed in degrees East or West and is the value at system present position.

Switch	Indications	
1) 3		E(W)
	XXX°	XX°
	(Angle)	(Mag Var)

4.4.5 True Airspeed Synchro Angle (STATUS 4)

The TAS synchro angle is displayed in degrees of rotation. This output has no function other than installation checkout.

Switch	Indications
1) 4	XXX° (Angle)

4.4.6 OMEGA Signal Calculated Coherency (STATUS 5)

The calculated coherency of the signals from each station is displayed in the segments. Each frequency is represented by a pair of numbers indicating centicycles (CECs), or percent of lane. The three pairs of numbers in the left segment are a calculation based on geographic position. The three pairs of numbers in the right segment are a measurement of the Tracking Filter output. Ideally, the left and right segments will match. In normal operation a strong station will indicate only a few CECs' difference between the left and right segments. A weaker station will indicate a greater difference. The display format is as follows:

Geographic Position			Tracking Filter		
10.2	11.3	13.6	10.2	11.3	13.6

Procedure:

Switch	Indications
1) 5	A,B,C,D,E,F,G,H.
2) X (A,B,C,D)	XX XX XX XX XX XX (See Format)

4.4.7 Magnetic Heading and True Airspeed (STATUS 6)

The two synchro inputs from the aircraft are read in and scaled by the system for rate aid purposes. The display is mainly used for checkout purposes.

Switch	Indications	
1) 6	XXX° (Angle)	XXX (Knots)

4.4.8 Unmodified Coherency (STATUS 7)

A coherency output not modified by geographical position is displayed in CECs similar to the Calculated Coherency display. However, a large table of values is needed to correlate this output. It is used only for installation checkout purposes. The procedure is identical to STATUS 5 and will not be repeated.

4.4.9 Malfunction Indication/Fault Isolation (STATUS 8)

A system failure(s) detected by the self-test routine will result in the MALF SYSTEM indicator coming on. The program defines which test has failed by means of a code in this display. The failure code is as follows:

A = Memory Checksum
B = RF 10.2
C = Phase/Digital 10.2
D = RF 13.6
E = Phase/Digital 13.6
F = RF 11.3
G = Phase/Digital 11.3
H = Analog/Digital

0 = Phase Counter Up
1 = Phase Counter Up-Down
2 = Direct Memory Access
3 = GP Test
4 = Receiver 10.2
5 = Receiver 13.6
6 = Receiver 11.3

Switch	Indications
1) 8	See Code

4.4.10 Calculated Lines of Position (STATUS 9)

The OMEGA lines of position are displayed as a geographical position calculation rather than a Tracking Filter output. This display has use as a checkout function only. The procedure is identical to LOP (4.3.5) and will not be repeated.

4.5 CONTROL INDICATOR PROCEDURES SHORT FORM

On the following pages a condensed version of the most commonly used Input/Output routines and a brief Check List are given.

CONTROL-INDICATOR PANEL PROCEDURES
(SHORT FORM)

Insert Routines

1) Date/Time (ENT-T On Only)
   INSERT
   D-GMT
   XXXXXX (Yr. Mo. Day)
   XXXXXX (Hr.Min.Sec.)
   ACCEPT (ENT-T Off)

2) Present Position (ENT-P On)
   INSERT
   POS
   N/S XX°XX.X (Lat)
   E/W XXX°XX.X (Long)
   A (B,C)
   ACCEPT (ENT-P-Off)

3) Fix Point Update (ENT-P-Off)
   (Same as Present Position)
   ACCEPT (at On Top Mark)

4) Destination Position (Flight Plan)
   INSERT
   D-POS
   X (0 to 9)
   N/S XX°XX.X (Lat)
   E/W XXX°XX.X (Long)
   ACCEPT

5) Mode Change
   INSERT
   STATUS
   TAS (MAG,MAN) (Desired Mode)
   ACCEPT

6) Block Station(s)
   INSERT
   STATUS
   S
   A(B,C,D)
   ACCEPT

7) Manual Heading/Speed
   INSERT
   MAN VEL
   XXX° (True Heading)
   XXX (Knots)
   ACCEPT

Display Routines

1) Date/Time
   DISPLAY
   D-GMT

2) System Position
   DISPLAY
   POS

3) Destination Position
   DISPLAY
   D-POS
   X (0 to 9)

4) Track/Groundspeed
   DISPLAY
   TK-GS

5) Bearing/Range Aircraft to DP
   DISPLAY
   BRG-RNG
   A/C
   X (0 to 9)

6) Bearing/Range DP to DP
   DISPLAY
   BRG-RNG
   X (0 to 9)
   Y (0 to 9)

7) Estimated Time Enroute/Arrival
   DISPLAY
   ETE-ETA
   X (0 to 9)

8) Wind
   DISPLAY
   WIND

9) Course/Cross Track Error
   DISPLAY
   CSE-CTE
   X (0 to 9)
   Y (0 to 9)

10) Manual Heading/Speed
    DISPLAY
    MAN-VEL

11) Mag Heading/True Air Speed
    DISPLAY
    STATUS
    6

12) True Heading/Mag Variation
    DISPLAY
    STATUS
    3

13) Position Variance
    DISPLAY
    STATUS
    2

14) Burst Data/Stations/Nav Mode
    DISPLAY
    STATUS
    0
    4 (5,6)

15) Signal Acquisitions
    DISPLAY
    STATUS
    1
    A (B,C,D)

16) Error Word (System Malf)
    DISPLAY
    STATUS
    8

CHECKLIST

BEFORE ENGINE START

1. Circuit Breakers (AC & DC) In
   (Bulkhead above cockpit door)
2. System ON
3. Insert Flight Plan in D-POS#0 thru 9
   Ensure Airport Position is inserted in D-POS#0
4. System to STANDBY

AFTER POWER TRANSFER

1. System ON
2. Insert D-GMT
3. Insert POS (D-POS#0 Coordinates) Use 'A' fix
4. Record initial position and time as first entry on data sheet

START OF TAKEOFF ROLL

1. Insert TAS Mode

IN FLIGHT

1. Record System Data at Takeoff
2. Verify TAS input after Aircraft reaches 205 knots
   (DISPLAY STATUS 6)
3. Record System and Aircraft Data at Points of interest
   and as desired

LANDING

1. Record System Data at Touchdown
2. System to OFF at Ramp or as desired