COPY 1,
Catalogued

Report No. FAA-RD-74-21

NAFEC
LIBRARY
FEB 21 '74
RECEIVED

Project Report

ATC-32

D. A. Shnidman

The Effect of Phase Error on the DPSK Receiver Performance

4 February 1974

Prepared for Federal Aviation Administration by

Lincoln Laboratory

MASSACHUSETTS INSTITUTE OF TECHNOLOGY

LEXINGTON, MASSACHUSETTS

Document is available to the public through the
National Technical Information Service,
Springfield, Virginia 22151

This document is disseminated under the sponsorship of the Department of Transportation in the interest of information exchange. The United States Government assumes no liability for its contents or use thereof.

D4-120

TECHNICAL REPORT STANDARD TITLE PAGE

1. Report No.	2. Government Accession No.	3. Recipient's Catalog No.
FAA-RD-74-21		

4. Title and Subtitle	5. Report Date
The Effect of Phase Error on the DPSK Receiver Performance	4 February 1974
	6. Performing Organization Code
7. Author(s)	8. Performing Organization Report No.
D.A. Shnidman	ATC-32
9. Performing Organization Name and Address	10. Work Unit No. (TRAIS) 45364
Massachusetts Institute of Technology Lincoln Laboratory P.O. Box 73 Lexington, Massachusetts 02173	Project No. 034-241-012
	11. Contract or Grant No.
	IAG-DOT-FA72WAI-261
12. Sponsoring Agency Name and Address	13. Type of Report and Period Covered
Department of Transportation Federal Aviation Administration Systems Research and Development Service Washington, D.C. 20591	Project Report
	14. Sponsoring Agency Code

15. Supplementary Notes

The work reported in this document was performed at Lincoln Laboratory, a center for research operated by Massachusetts Institute of Technology under Air Force Contract F19628-73-C-0002.

16. Abstract

Several methods of realizing a DPSK receiver use a delay line. Temperature variations cause changes in the delay which, in turn, cause errors in the phase differences between the reference and information signals. The effect of these errors on the performance of an optimum DPSK receiver is studied in this report.

17. Key Words	18. Distribution Statement
DPSK Delay Error	Document is available to the public through the National Technical Information Service, Springfield, Virginia 22151

19. Security Classif. (of this report)	20. Security Classif. (of this page)	21. No. of Pages	22. Price
Unclassified	Unclassified	26	3.00 HC 1.45 MF

Form DOT F 1700.7 (8-69)

TABLE OF CONTENTS

Section		Page
1	INTRODUCTION.	1
2	EXACT ERROR EXPRESSION	3
3	P_e/bit FOR E/N_0 INFINITE.	8
4	CONCLUSIONS	13
APPENDIX		
A	DERIVATION OF $P_e(E/N_0, \rho_1, \rho_2, \Delta, \Theta)$. . . .	15
B	COMPUTER SUBROUTINE	20
	REFERENCES	21

LIST OF ILLUSTRATIONS

Figure		Page
1.	Realization of DPSK Receiver	1
2.	Plot of P_e/bits vs. Δ for Several Values of ρ and E/N_0.	7
3A.	"Largest Value of Δ" Which Yields No Error For Infinite E/N_0 and $-\pi \leq \theta < 0$.	9
3B.	Δ Must Be Greater Than $\pi/2$ To Cause an Error at Infinite E/N_0 With $0 \leq \theta \leq \pi$	9
4.	Plot of Δ_M vs. ρ	11
5.	$\Delta_e(\theta,\rho)$ vs. θ	12
6.	P_e/bit vs. Δ	12
7.	Percent Tolerance of 250 nsec Delay Line vs. IF Carrier Frequency.	14
A-1.	Normalized ($E/N_0 = 1$) Phasor Diagram for DPSK Receiver Output in Interfereces ρ_1 and ρ_2, with Phase Offset, Δ	17

LISTS OF TABLES

Table		Page
1	Δ (degrees) vs. ε (nsec) for 60 MHz.	2
2	P_e/bit vs. Δ for ρ = 0, 0.5, 0.8, and 0.9. . . .	6

SECTION 1

INTRODUCTION

Several methods of realizing a DPSK receiver use delay lines. Errors in the delay cause a phase difference error, Δ, between the reference and information pulses. The delay can be adjusted at any given temperature but, since the delay line is temperature sensitive and the receiver is subject to a range of temperatures, phase errors are likely to arise. The effect of these errrors on the performance of the receiver is analyzed in this report.

Represented in Figure 1 is the design of an optimum receiver. The delay τ is equal to $T + \varepsilon$ where ε is the delay error. The output of the mixer has a phase error Δ.

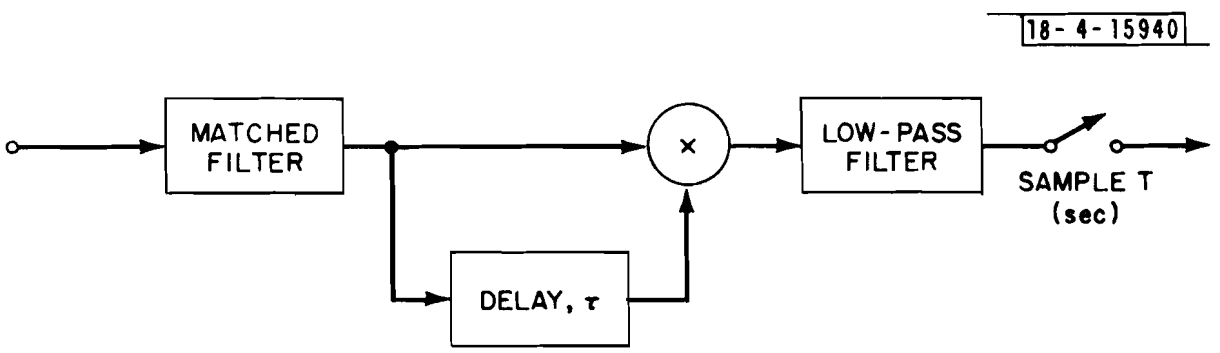

Figure 1. Realization of DPSK Receiver.

$$\Delta \text{ (rad)} = 2\pi F_c \varepsilon \tag{1}$$

or

$$\Delta \text{ (deg)} = 360 F_c \varepsilon \tag{2}$$

where F_c is the carrier frequency of the input to the matched filter. At an IF frequency of 60 MHz we get

$$\Delta \text{ (deg)} = 21.6 \varepsilon \text{ (nsec)} \quad . \tag{3}$$

Table 1 presents Δ in degrees vs ε. The effect of Δ on P_e/bit is analyzed below and limits on the range of Δ are determined.

Table 1. Δ (degrees) vs. ε (nsec) for 60 MHz.

ε (nsec)	Δ (degrees)
0.5	10.8
1.0	21.6
1.5	32.4
2.0	43.2
2.5	54.0
3.0	64.8
3.5	75.6
4.0	86.4

SECTION 2

EXACT ERROR EXPRESSION

The P_e/bit formulas for DPSK given in Project Report ATC-12 [1] do not include the parameter Δ. It is therefore necessary to generalize the P_e/bit expressions and to accomplish this, we take a slightly different approach. First, we define the following parameters:

E/N_0	is the signal-to-noise ratio.
ρ_1^2	is the jamming-to-signal ratio on one of the pulse pairs.
ρ_2^2	is the jamming-to-signal ratio on the other of the pulse pairs.
Δ	is the phase difference error.
θ	is the phase angle between the signal and jamming carriers.

$\rho_2 = |\rho_2|$ if the jamming pulses have the same phase relationship over the two baud intervals as do the reference and information pulses.

$\rho_2 = -|\rho_2|$ if the jamming pulses in the two baud intervals have the opposite phase relationship as do the reference and information pulses.

If we define $P_\theta(E/N_0, \rho_1, \rho_2, \Delta, \theta)$ as the bit probability of error for a given set of values for E/N_0, ρ_1, ρ_2, Δ, and θ, then it is shown in Appendix A that

$$P_\theta(E/N_0, \rho_1, \rho_2, \Delta, \theta) = \frac{1}{2}[1 - Q(\sqrt{b}, \sqrt{a}) + Q(\sqrt{a}, \sqrt{b})] \qquad (4)$$

where

$$a = a(E/N_0, \rho_1, \rho_2, \Delta, \theta)$$

$$= \frac{E}{N_0}\left\{[1 + (\rho_1 + \rho_2)\cos\theta](1 - \cos\Delta) + \frac{\rho_1^2 - 2\rho_1\rho_2\cos\Delta + \rho_2^2}{2}\right.$$

$$\left. + (\rho_1 - \rho_2)\sin\theta\sin\Delta\right\} \qquad (5)$$

and

$$b = b(E/N_0, \rho_1, \rho_2, \Delta, \theta)$$

$$= \frac{E}{N_0}\left\{[1 + (\rho_1 + \rho_2)\cos\theta)](1 + \cos\Delta) + \frac{\rho_1^2 + 2\rho_1\rho_2\cos\Delta + \rho_2^2}{2}\right.$$

$$\left. - (\rho_1 - \rho_2)\sin\theta\sin\Delta\right\} \quad . \qquad (6)$$

In order to obtain the P_e/bit, we must sum the two cases $\rho_2 = |\rho_2|$ and $\rho_2 = -|\rho_2|$ and average over the uniformly distributed variable, θ

$$P_e/\text{bit} = \frac{1}{4\pi} \int_{-\pi}^{\pi} \left[P_\theta\left(\frac{E}{N_0}, \rho_1, \rho_2, \Delta, \theta\right) + P_\theta\left(\frac{E}{N_0}, \rho_1, -\rho_2, \Delta, \theta\right) \right] d\theta \quad . \tag{7}$$

Using Eq. (7), we generate Table 2, showing P_e/bit vs. Δ for different E/N_0 and ρ, where $\rho_1 = |\rho_2| = \rho$. In Figure 2, some of these results are plotted. We note that for $\Delta > 10°$, the P_e/bit is dependent on ρ and to a much lesser extent on E/N_0. This is especially true for very large E/N_0 . We can, therefore, obtain an understanding of the relationship of P_e/bit vs. ρ by letting E/N_0 go to infinity. The results are presented in the next section.

Table 2. P_e/bit vs. Δ for ρ = 0, 0.5, 0.8, and 0.9.

ρ	Δ (degrees)	$E/N_0 \approx 16$ dB	$E/N_0 = 20$ dB	$E/N_0 \approx 25$ dB
0	0	$< 10^{-12}$	$< 10^{-12}$	$< 10^{-12}$
	10	$< 10^{-12}$	$< 10^{-12}$	$< 10^{-12}$
	20	$< 10^{-12}$	$< 10^{-12}$	$< 10^{-12}$
	30	$< 10^{-12}$	$< 10^{-12}$	$< 10^{-12}$
0.5	0	2.8×10^{-6}	2.5×10^{-12}	$< 10^{-12}$
	10	5.6×10^{-5}	7.4×10^{-7}	7.3×10^{-7}
	20	1.7×10^{-3}	3.1×10^{-5}	7.3×10^{-7}
	30	1.8×10^{-2}	6.0×10^{-3}	4.3×10^{-4}
0.8	0	2.1×10^{-2}	1.3×10^{-3}	2.7×10^{-7}
	10	5.7×10^{-2}	3.1×10^{-2}	1.2×10^{-2}
	20	1.4×10^{-1}	1.4×10^{-1}	1.4×10^{-1}
	30	1.9×10^{-1}	1.9×10^{-1}	1.9×10^{-1}
0.9	0	1.0×10^{-1}	4.2×10^{-2}	3.8×10^{-3}
	10	1.5×10^{-1}	1.4×10^{-1}	1.4×10^{-1}
	20	2.1×10^{-1}	2.0×10^{-1}	2.0×10^{-1}
	30	2.3×10^{-1}	2.2×10^{-1}	2.2×10^{-1}

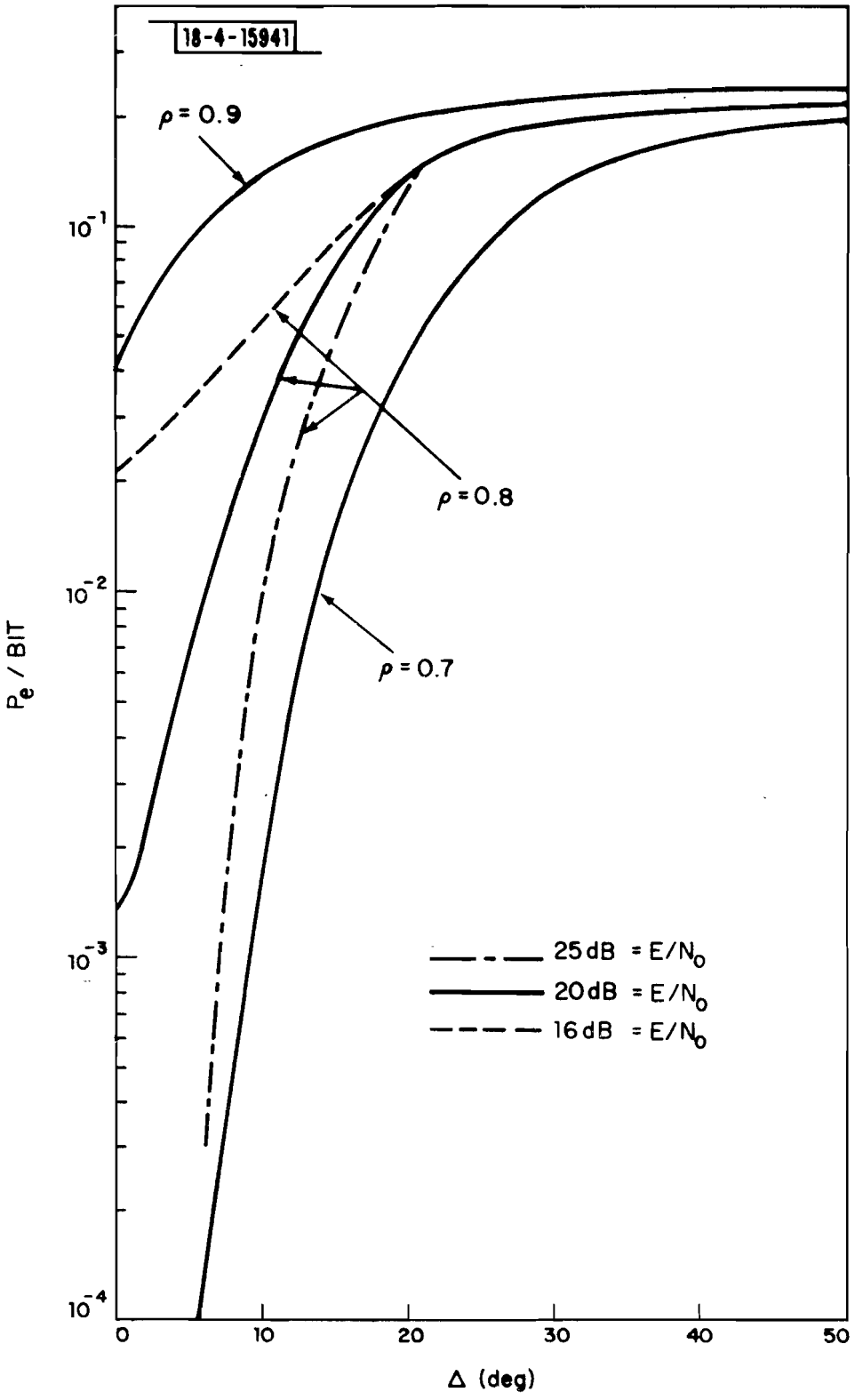

Fig. 2. Plot of P_e/bits vs Δ for Several Values of ρ and E/N_0.

SECTION 3

P_e/bit FOR E/N_0 INFINITE

For E/N_0 infinite, the P_e/bit will depend only on ρ and Δ. Figure 3 represents a worst-case situation for P_e/bit with $\rho_1 = \rho$ and $\rho_2 = -\rho$. In this case, we have an error only if Δ is larger than $\Delta_e(\theta,\rho)$ where

$$\Delta_e(\theta,\rho) = \frac{\pi}{2} - \psi(\theta,\rho) \qquad -\pi \leq \theta \leq 0 \tag{8}$$

where, in turn, $\psi(\theta,\rho)$ (See Figure 3) is

$$\psi(\theta,\rho) = \cos^{-1}\left(\frac{1 - \rho^2}{\sqrt{1 + 2\rho^2 - 4\rho^2 \cos\theta + \rho^4}}\right) ; \tag{9}$$

that is, P_e/bit is zero if $\Delta < \Delta_e(\theta,\rho)$.

$\psi(\theta,\rho)$ is a maximum and $\Delta_e(\theta,\rho)$ is a minimum when $\theta = -\frac{\pi}{2}$ so that

$$\Delta_M = \Delta_e(-\frac{\pi}{2},\rho) = \frac{\pi}{2} - \cos^{-1}\left(\frac{1 - \rho^2}{1 + \rho^2}\right) \quad . \tag{10}$$

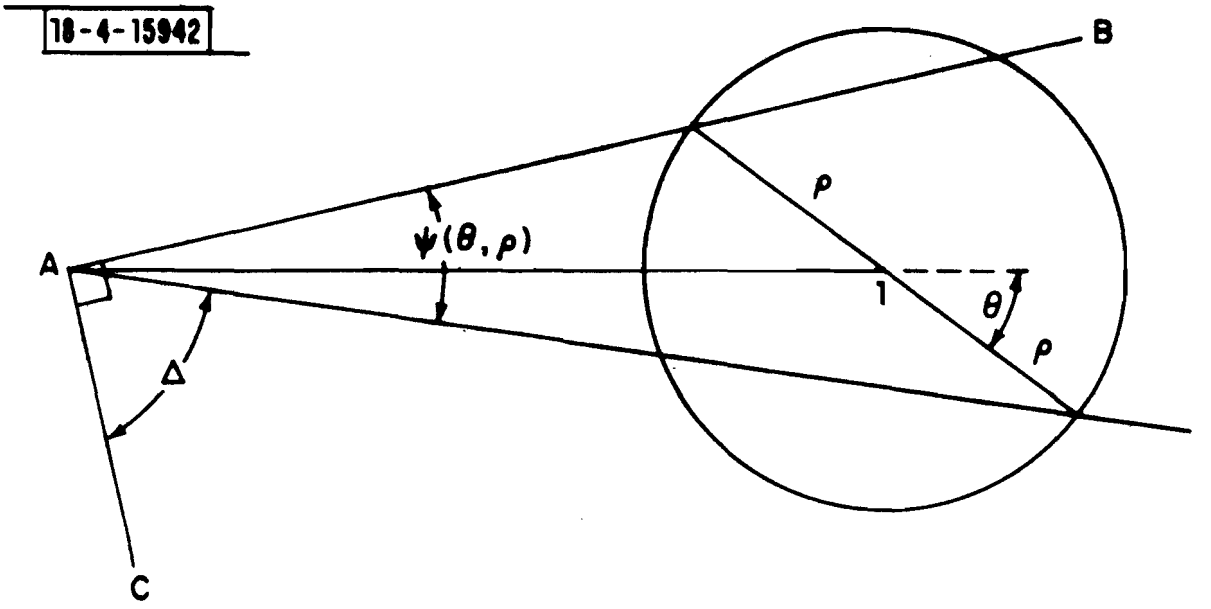

Fig. 3A. "Largest Value of Δ" Which Yields No Error for Infinite E/N_0 and $-\pi \leq \theta < 0$.

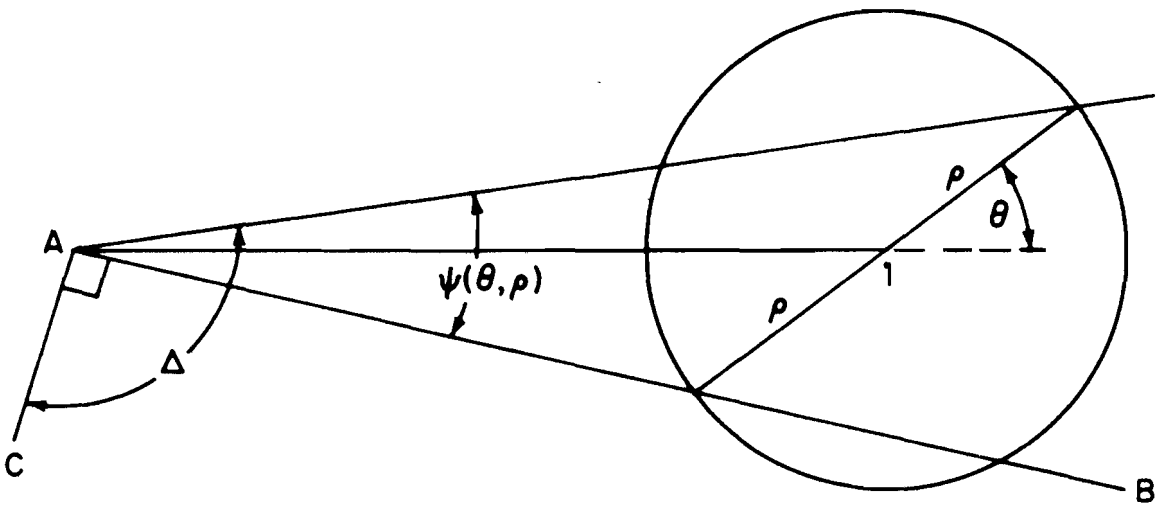

Fig. 3B. Δ Must Be Greater Than π/2 To Cause an Error at Infinite E/N_0 with $0 \leq \theta \leq \pi$.

Δ_M is the largest value of Δ for which $P_{e|\theta}$/bit is zero for all θ. In Figure 4, Δ_M vs. ρ is plotted. An acceptable range for Δ is $-\Delta_M \leq \Delta \leq \Delta_M$ for E/N_0 infinite. For finite E/N_0, we would want to narrow the tolerance on Δ.

We can also obtain P_e/bit for infinite E/N_0 for $\Delta > \Delta_M$ since

$$P_{e|\Delta}/\text{bit} = \frac{1}{4} \Pr\{\Delta > \Delta_e(\theta,\rho)\} \qquad \text{for } -\pi \leq \theta \leq 0 \tag{11}$$

The factor of 1/4 comes about from two factors of 1/2. The first is due to the fact that the cases $\rho_2 = -\rho$ and $\rho_2 = \rho$ are equally likely and only the former case leads to an error for $\Delta < \pi/2$ and $\theta < 0$. The second is due to the fact that for positive Δ we have an error only for θ negative and θ is equally likely to be positive as negative. Figure 5 shows a plot of $\Delta_e(\theta,\rho)$ vs.θ for $\rho = 0.5$ and 0.8. From this plot the $E/N_0 = \infty$ curves in Figure 6 are derived.

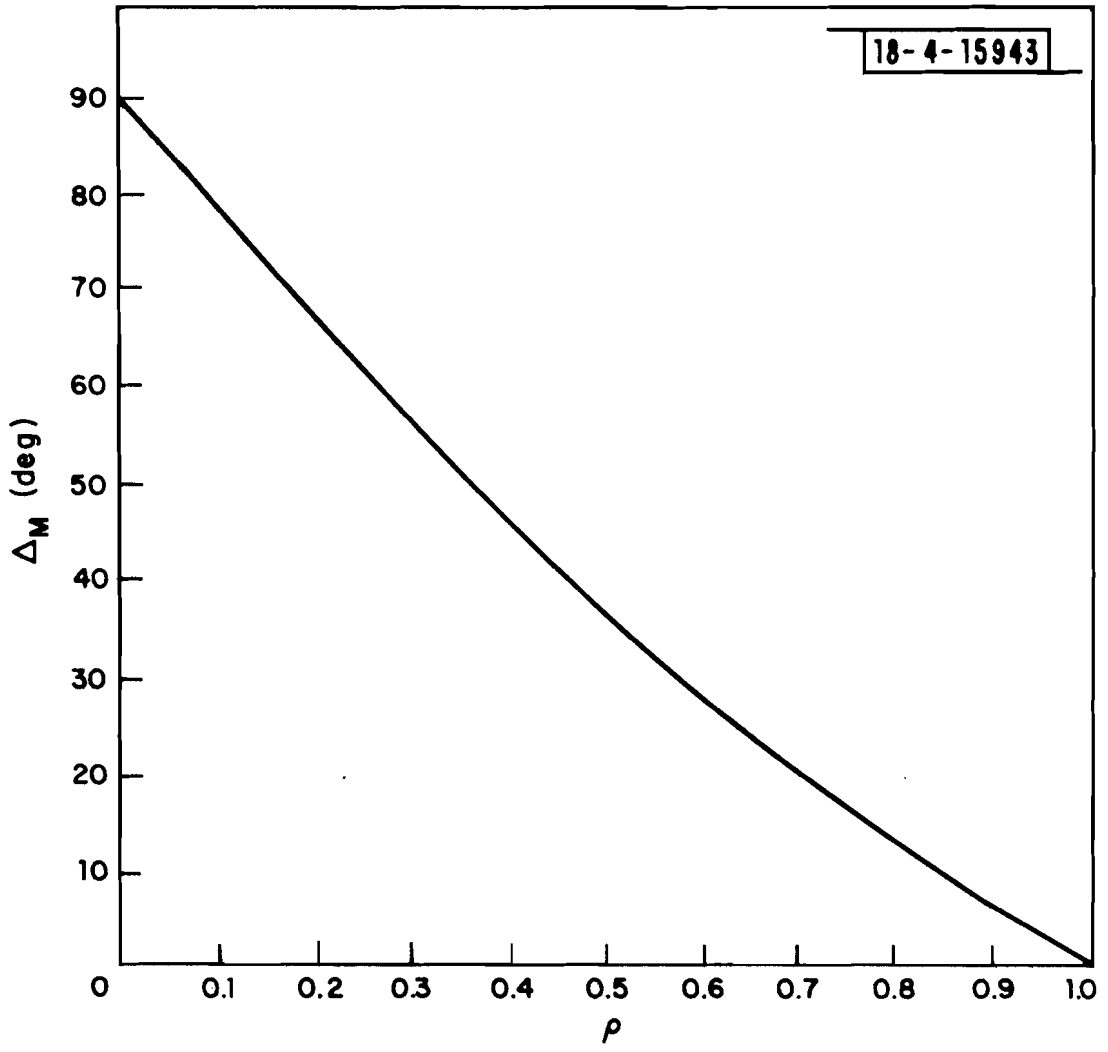

Fig. 4. Plot of Δ_M vs ρ.

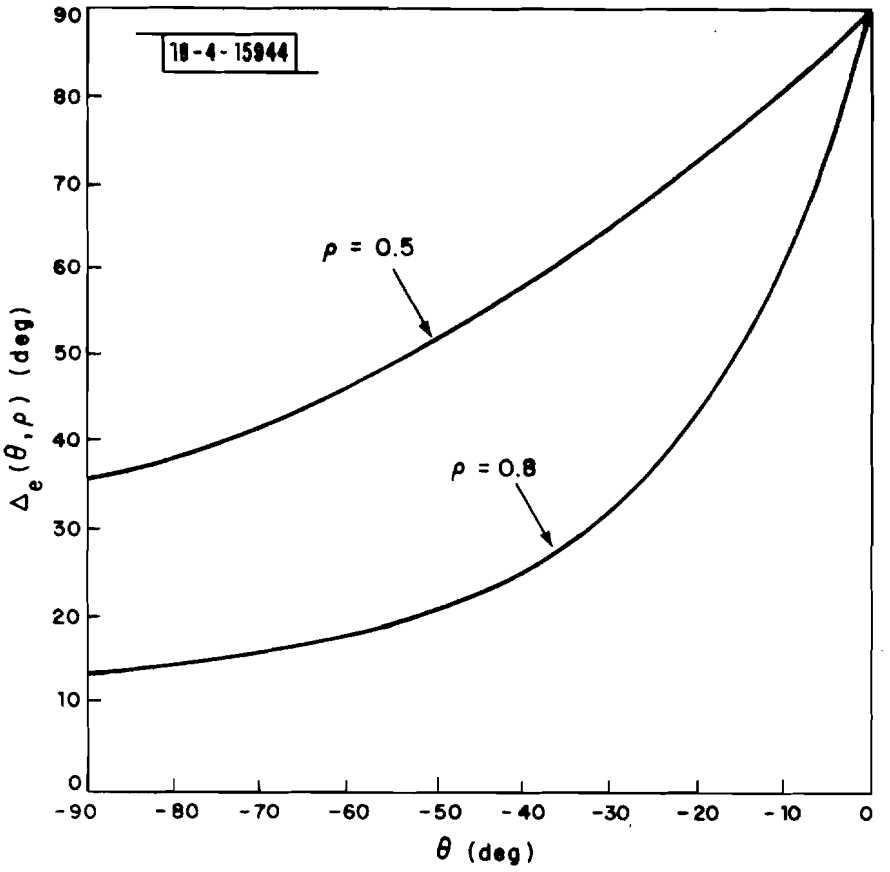

Fig. 5. Δ_e (θ,ρ) vs θ.

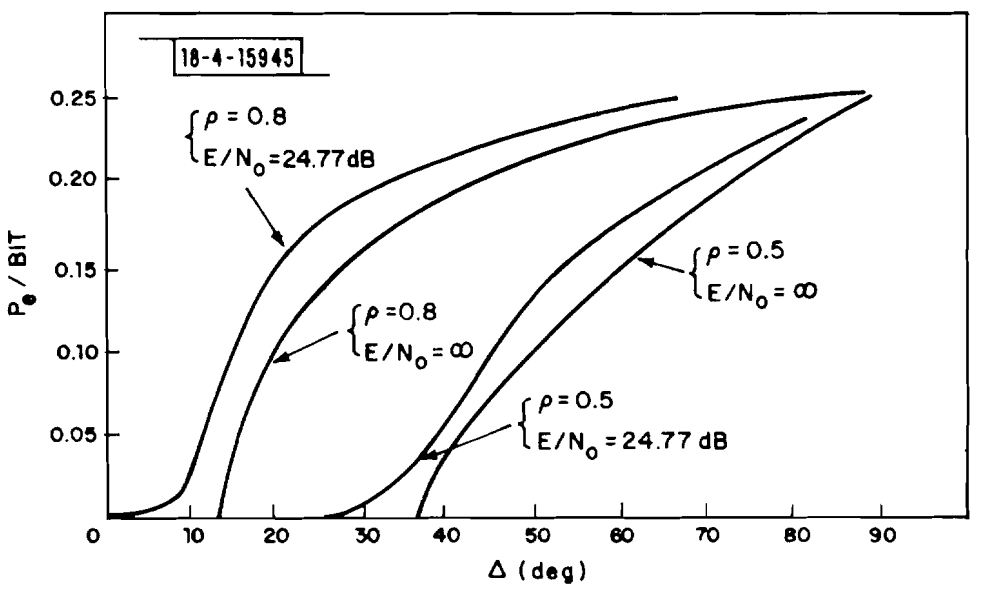

Fig. 6. P_e/bit vs Δ.

SECTION 4

CONCLUSIONS

We have seen that the DPSK receiver can have large phase shifts and still yield negligible P_e/bit in the absence of interference. In interference, the situation is complicated and we attempt to summarize the results for $E/N_0 \approx$ 25 dB in Figure 7 and its accompanying table. The table gives combinations of Δ and ρ which bracket P_e/bit of 10^{-3}. The figure plots the percent of tolerance error which corresponds to a given Δ vs IF carrier frequency. From the table, we can estimate an acceptable value of Δ and from the figure convert Δ to % tolerance necessary over the temperature range (nominally -20°C to 70°C) for a specific IF carrier frequency.

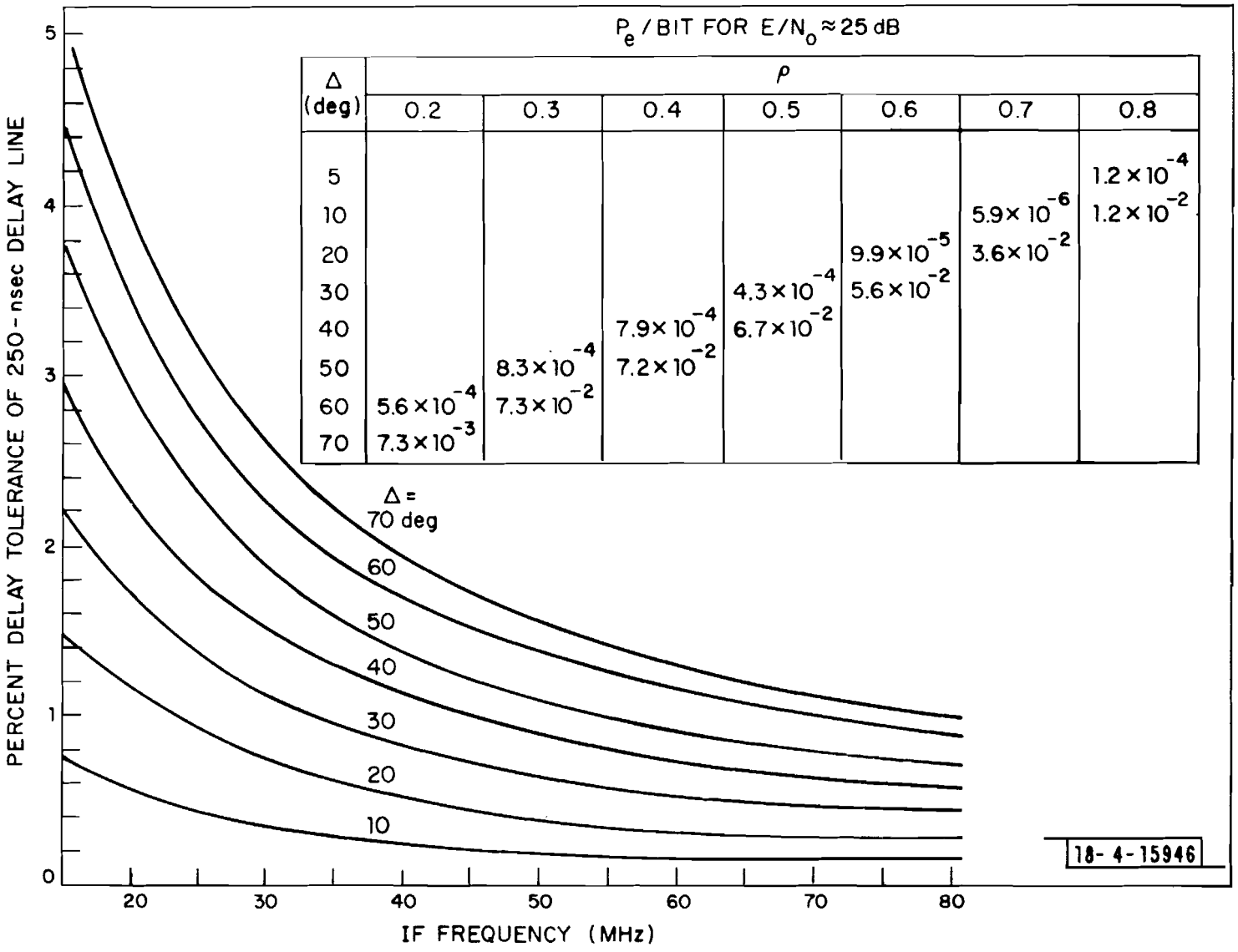

P_e / BIT FOR $E/N_0 \approx 25$ dB

Δ (deg)	ρ = 0.2	0.3	0.4	0.5	0.6	0.7	0.8
5							1.2×10^{-4}
10						5.9×10^{-6}	1.2×10^{-2}
20					9.9×10^{-5}	3.6×10^{-2}	
30				4.3×10^{-4}	5.6×10^{-2}		
40			7.9×10^{-4}	6.7×10^{-2}			
50		8.3×10^{-4}	7.2×10^{-2}				
60	5.6×10^{-4}	7.3×10^{-2}					
70	7.3×10^{-3}						

Fig. 7. Percent Tolerance of 250 nsec Delay Line vs IF Carrier Frequency.

APPENDIX A

DERIVATION OF $P_e(E/N_0, \rho_1, \rho_2, \Delta, \theta)$

Applying the results of Stein [2,3] to our problem, we obtain for a given θ

$$P_{e/\theta}/\text{bit} = \frac{1}{2}\left[1 - Q(\sqrt{\beta},\sqrt{\alpha}) + Q(\sqrt{\alpha},\sqrt{\beta})\right] \tag{A-1}$$

where

$$\alpha = \frac{1}{2}\frac{E}{N_0}\Big[(1 + 2\rho_1 \cos\theta + \rho_1^2) + (1 + 2\rho_2 \cos\theta + \rho_2^2) - 2\sqrt{(1 + 2\rho_1 \cos\theta + \rho_1^2)(1 + 2\rho_2 \cos\theta + \rho_2^2)}\cos(\psi+\Delta)\Big] \tag{A-2}$$

and

$$\beta = \frac{1}{2}\frac{E}{N_0}\Big[(1 + 2\rho_1 \cos\theta + \rho_1^2) + (1 + 2\rho_2 \cos\theta + \rho_2^2) + 2\sqrt{(1 + 2\rho_1 \cos\theta + \rho_1^2)(1 + 2\rho_2 \cos\theta + \rho_2^2)}\cos(\psi+\Delta)\Big]. \tag{A-3}$$

ψ and Δ are pictured in Figure A-1 where ψ is the angle between the resultant reference signal and the resultant information signal and Δ is the phase offset. Since we have

$$\cos(\psi + \Delta) = \cos \psi \cos \Delta - \sin \psi \sin \Delta \tag{A-4}$$

we must determine $\cos \psi$ and $\sin \psi$. From Figure A-1 we see

$$x^2 + y^2 = \ell_2^2 \tag{A-5}$$

$$(\ell_1 - x)^2 + y^2 = (\rho_1 - \rho_2)^2 \quad . \tag{A-6}$$

Combining (A-5) and (A-6) we obtain

$$x = \frac{\ell_1^2 + \ell_2^2 - (\rho_1 - \rho_2)^2}{2\ell_1} \tag{A-7}$$

and

$$\cos \psi = \frac{x}{\ell_2} = \frac{\ell_1^2 + \ell_2^2 - (\rho_1 - \rho_2)^2}{2\ell_1 \ell_2}$$

$$= \frac{1 + (\rho_1 + \rho_2) \cos \theta + \rho_1 \rho_2}{\sqrt{(1 + 2 \rho_1 \cos \theta + \rho_1^2)(1 + 2 \rho_2 \cos \theta + \rho_2^2)}} \tag{A-8}$$

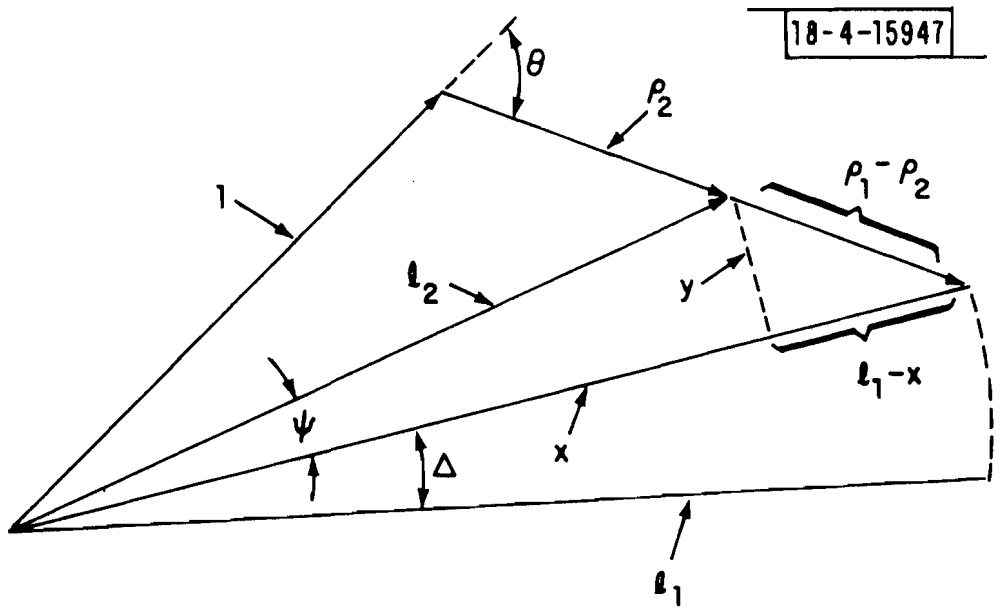

$$\ell_1 = \sqrt{1 + 2\rho_1 \cos\theta + \rho_1^2}$$

$$\ell_2 = \sqrt{1 + 2\rho_2 \cos\theta + \rho_2^2}$$

$$x^2 + y^2 = \ell_2^2$$

$$(\ell_1 - x)^2 + y^2 = (\rho_1 - \rho_2)^2$$

$$\cos\psi = \frac{x}{\ell_2} = \frac{\ell_1^2 + \ell_2^2 - (\rho_1 - \rho_2)^2}{2\ell_1 \ell_2}$$

Fig. A-1. Normalized ($E/N_0 = 1$) Phasor Diagram for DPSK Receiver Output in Interferences ρ_1 and ρ_2, with Phase Offset, Δ.

From (A-8) we obtain sin ψ as

$$\sin \psi = \frac{(\rho_1 - \rho_2) \sin \theta}{\sqrt{(1 + 2 \rho_1 \cos \theta + \rho_1^2)(1 + 2 \rho_2 \cos \theta + \rho_2^2)}} \tag{A-9}$$

Substituting (A-8) and (A-9) into (A-4) and using the results in (A-2) and (A-3), we obtain Eqs. (5) and (6) respectively. The expressions can be simplified when $\Delta = 0$, since

$$\alpha = \frac{E}{2N_0} (\rho_1 - \rho_2)^2 \tag{A-10}$$

and

$$\beta = \frac{E}{2N_0} \left[4 + 4 (\rho_1 + \rho_2) \cos \theta + (\rho_1 + \rho_2)^2\right] . \tag{A-11}$$

When $\Delta = 0$ and $\rho_1 = \pm\rho_2$, the error expressions simplify as follows:

If $\rho_1 = \rho$, $\rho_2 = -\rho$ then

$$P_e/\text{bit} = \frac{1}{2}[1 - Q(\sqrt{b}, \sqrt{a}) + Q(\sqrt{a}, \sqrt{b})] \tag{A-12}$$

$$a = 2\rho^2 E/N_0 \tag{A-13}$$

$$b = 2 E/N_0 \tag{A-14}$$

and if $\rho_2 = \rho_1 = \rho$ then

$$P_e/\text{bit} = \frac{1}{2} e^{-\frac{E}{N_0}(1+\rho^2)} I_0(2\rho \frac{E}{N_0}) \ . \qquad \text{(A-15)}$$

A computer subroutine (Appendix B) has been written by Louise Balboni to evaluate Eq. (4). We can evaluate P_e/bit from Eq. (7) using this program or if appropriate (A-12) or (A-15).

APPENDIX B

COMPUTER SUBROUTINE

```
      SUBROUTINE CALPTH(PTH,EN0,RHO1,RHO2,DEL,THETA)
      IMPLICIT REAL*8(A-H,O-Z)
C  COMPUTE COMMON TERMS
      CDEL=DCOS(DEL)
      TERM1=1.D0+(RHO1+RHO2)*DCOS(THETA)
      ATERM2=1.D0-CDEL
      BTERM2=1.D0+CDEL
      RHO1SQ=RHO1**2
      RHO2SQ=RHO2**2
      PRTERM=2.D0*RHO1*RHO2*CDEL
      ATERM3=(RHO1SQ-PRTERM+RHO2SQ)*.5D0
      BTERM3=(RHO1SQ+PRTERM+RHO2SQ)*.5D0
      TERM4=(RHO1-RHO2)*DSIN(DEL)*DSIN(THETA)
C  COMPUTE A & B AS A COMBINATION OF THESE PREDEFINED TERMS
      A=EN0*(TERM1*ATERM2+ATERM3+TERM4)
      B=EN0*(TERM1*BTERM2+BTERM3-TERM4)
C  ERROR PRINTOUT IN CASE OF NEGATIVE VALUE FOR SQRT FUNCTION
      IF(A.LT.0.D0.OR.B.LT.0.D0)
     1WRITE(6,101)EN0,RHO1,RHO2,DEL,THETA,CDEL,TERM1,ATERM2,BTERM2,TERM3
     1,TERM4,A,B
  101 FORMAT(' EN0=',D12.5,' RHO1=',D12.5,' RHO2=',D12.5,' DEL=',D12.5,'
     1 THETA=',D12.5/' CDEL=',D12.5,' TERM1=',D12.5,' ATERM2=',D12.5,' B
     2TERM2=',D12.5,' TERM3=',D12.5/' TERM4=',D12.5,' A=',D12.5,' B=',D1
     32.5)
C  COMPUTE ARGUMENTS FOR Q FUNCTION
      SQRTA=DSQRT(A)
      SQRTB=DSQRT(B)
C  COMPUTE PTH
      PTH=.5D0*(1.D0-QFUNCT(SQRTB,SQRTA)+QFUNCT(SQRTA,SQRTB))
      RETURN
      END
```

REFERENCES

[1] Shnidman, David A., "A Comparison of Immunity to Garbling for Three Candidate Modulation Schemes for DABS," Project Report, ATC-12, Lincoln Laboratory, M.I.T. (14 August 1972).

[2] Stein, Seymour, "Unified Analysis of Certain Coherent and Noncoherent Binary Communications Systems," IEEE Transactions on Information Theory, IT-10, (January 1964), pp. 43-51.

[3] Schwartz, Mischa, Bennett, William R., and Stein, Seymour, Communication Systems and Techniques, (McGraw-Hill, Inc., N.Y.), 1965.