Catalogued

Report No. FAA-RD-74-47

FAA WJH Technical Center
00090127

APPROACH LIGHT SYSTEM (ALS) MULTIPLE DISTRIBUTION SYSTEM REDESIGN

Richard P. Marek

AVAILABLE IN ELECTRONIC FORMAT

March 1974

Final Report

Document is available to the public through the
National Technical Information Service,
Springfield, Virginia 22151.

U.S. DEPARTMENT OF TRANSPORTATION
FEDERAL AVIATION ADMINISTRATION
Systems Research & Development Service
Washington, D.C. 20590

NOTICE

This document is disseminated under the sponsorship of the Department of Transportation in the interest of information exchange. The United States Government assumes no liability for its contents or use thereof.

Technical Report Documentation Page

1. Report No. FAA-RD-74-47	2. Government Accession No.	3. Recipient's Catalog No.
4. Title and Subtitle Approach Light System (ALS) Multiple Distribution System Redesign		5. Report Date March 1974
		6. Performing Organization Code
7. Author(s) Richard P. Marek		8. Performing Organization Report No. ESR-95
9. Performing Organization Name and Address Hevi-Duty Electric Division, Sola Basic Industries Goldsboro, N.C.		10. Work Unit No. (TRAIS) 45330
		11. Contract or Grant No. DOT-FA71WA-2633
12. Sponsoring Agency Name and Address Department of Transportation Federal Aviation Administration Systems Research and Development Service Washington, D. C. 20590		13. Type of Report and Period Covered Final Report
		14. Sponsoring Agency Code
15. Supplementary Notes		

16. Abstract

This effort is an attempt, without sacrificing reliability, to provide a lower cost Approach Light System (ALS) distribution system by changing from the present series output circuits to a multiple type with constant voltage and using parallel step-down transformers, in lieu of the present series to series transformers. Moreover, modern Urban Residential Distribution (URD) design concepts are used for smaller and more compact major components. Extensive field testing is required to decide whether the concept is desirable for a standard ALS distribution system.

17. Key Words Approach Lighting System (ALS) Multiple Distribution System Redesign ALS		18. Distribution Statement Document is available to the public through the National Technical Information Service, Springfield, Va. 22151.	
19. Security Classif. (of this report) Unclassified	20. Security Classif. (of this page) Unclassified	21. No. of Pages 85	22. Price

Form DOT F 1700.7 (8-72) Reproduction of completed page authorized

TABLE OF CONTENTS

INTRODUCTION	1
DESIGN AND DEVELOPMENT	2
TESTING	8
CONCLUSION	13
APPENDIX A - DIAGRAMS AND SCHEMATICS	A-1
APPENDIX B - PHOTOGRAPHS	B-1
APPENDIX C - TEST RESULTS	C-1
APPENDIX D - INDEPENDENT TEST RESULTS	D-1

Report No. 1 (6 pages)
Report No. 2 (9 pages)
Report No. 3 (21 pages)

INTRODUCTION

The power and control portion of the present Approach Lighting System utilizes three series output circuits to supply power to the individual incandescent lamps. Power is provided by three single phase, constant current regulators - one regulator connected to each phase of the three phase 4160 GND Y/2400 volt incoming supply. Simultaneous brightness control is accomplished by paralleling the three control systems of the separate regulators. This power supply is housed in a self-supporting, weatherproof type, walk-in enclosure. Each individual lamp is supplied with power through series to series isolating transformers connected to the output circuits.

Redesign of this power and control portion of the Approach Lighting System to a multiple type distribution system is required, to provide a minimum cost system without reduction in integrity or reliability. Two major deviations from the present system are incorporated into this design. First of all, the system utilizes a constant voltage, which in turn necessitates the use of parallel step-down transformers, rather than series to series current transformers, to power a series of light bars each consisting of five incandescent lamps.

Secondly, the design is based on the concepts currently utilized for Urban Residential Distribution (URD) Systems.[1] This low-profile design is smaller and more compact than the present system, although three separate units are required to provide the equivalent amount of power.

DESIGN AND DEVELOPMENT

The system required by the contract is divided into three separate components consisting of a remote control panel (RCP-1), a series of air cooled transformers (ACT) and the regulator/intensity control unit (RIC). The RCP-1, located in the control tower is used to energize or de-energize the unit and to select the appropriate brightness position. The ACT, located directly adjacent to the light bar, is used to provide power and to compensate for the voltage drop encountered with long cable runs. The last and most important component, the RIC, supplies the regulated voltage and contains all the control and power circuitry. A block diagram illustrating the interconnections of these components is located in Appendix A-1.

RCP-1 - The remote control panel is a very simple device, consisting of a metal box, caption plate, toggle switch, five position selector switch and a terminal block. Since this design presented no special problems, nor required more than typical production testing, the drawings in Appendix A and the photographs in Appendixes B-1 and B-2 will complete the discussion of this device.

ACT - For reliability under severe environmental conditions, the design of the step-down air cooled transformer is patterned after the Hardshell encapsulated style of the Hevi-Duty Electric low voltage, general purpose transformer line. To facilitate the connection of five individual lamps, the secondary of the transformer consists of five leads terminating each end of the winding, which are in turn, connected to two five point terminal blocks. This arrangement provides a separate terminal point for each lamp connection.

The primary has two 2 1/2% taps below normal to correct for cable drop, and is connected to a three point terminal block. This allows a permanent and uniform three-wire input connection for all of the units used in the system. By alternating the L1 lead from H1 to H3, the three-wire load of the regulator can be balanced. The primary is also protected by a circuit breaker and a lightning arrestor. For additional information, refer to Appendix A-2 and Appendixes B-3 and B-4. Two sizes were designed and developed to supply either 300 or 500 watt lamps, hence the

designation ACT 300 and ACT 500.

RIC - The third and most complicated component of the system is the regulator/intensity control unit. The basic design is derived from the Hevi-Duty Electric commercial power voltage regulator line, called the Acuvolt®, which has proven to be a reliable device over the many years of production. The block diagram in Appendix A-3 shows the arrangement of the subcomponents: buck-boost autotransformer (T1), linear reactor, saturable reactor, silicon controlled rectifier (SCR) bridge and voltage controller. The capacity of the unit developed for this contract is 37 KVA and, therefore, the designation RIC-37.

Acuvolt® Operation - The proportion of boost or bucking voltage supplied by T1 is controlled by the combined action of the linear and saturable reactors. Under no-load conditions the linear and saturable reactors can be considered a series connected reactance placed across the buck-boost winding, performing as a voltage divider.

Assuming that the saturable reactor can be made to vary from zero reactance to open circuit by D.C. current control, the performance becomes obvious. At low line voltage, the full D.C. control current is supplied by the SCR bridge and the reactance approaches zero. The boost winding is used to full advantage, and the output voltage is restored. At high line voltages, the D.C. control current is turned off, and the counter-action of the buck winding restores the output voltage to nominal.

In operation, the output voltage is sensed and compared to a stable reference within the voltage controller. The difference between these voltages is amplified and used to control the current in the D.C. winding of the saturable reactor. Thus, if the input voltage is increased or the load is decreased, the buck voltage is increased so that the output remains constant. Since the sensing circuit is unable to distinguish whether the change is in the input voltage or the load, it corrects for both conditions.

RIC Operation - Operation of the RIC unit is basically the same as the Acuvolt®, although the circuit configuration is modified slightly. Appendix A-3 shows the modified block diagram for the RIC unit. By inverting the circuit,

the buck-boost autotransformer could be changed to a buck-boost isolating, step-down transformer. The secondary is tapped to provide five brightness steps which are switched by low voltage contactors.

To prevent the possibility of accidentally closing two contactors at the same time, a method of interlocking the contactor coils through auxiliary contacts is used. This arrangement, shown on the RIC Schematic Diagram in Appendix A-4, allows rapid switching without de-energizing the unit, and eliminates the possibility of shorting the winding. The contactors are energized directly by a five position selector switch for local operation, and indirectly by D.C. pilot relays for remote operation. The use of D.C. which is provided by a simple RC filtered full wave bridge supply module, eliminates the problems of long distance pilot control encountered with A.C.

Voltage Controller - One of the most crucial components of the RIC is the device which senses the output and controls the D.C. current to the saturable reactor. The standard Acuvolt® uses an electronic plug-in module to perform this function. However, this module was not designed for the stringent ambient temperature extremes encountered by the ALS which present problems of storage and temperature drift.

Storage was a relatively simple problem to solve. All of the industrial type components were merely replaced with Military types having a temperature range of at least -55°C to 125°C.

On the other hand, temperature drift is very difficult to predict, and bread-board, cut-and-try methods of temperature compensation are difficult and time consuming at best. Since the Acuvolt® voltage controller operates quite well within a relatively narrow temperature band, the thermally uprated module was enclosed in a case with a restricted internal temperature range.

This is accomplished by using a thermostat with a normally closed contact which opens at approximately 30°C. The thermostat is mounted on the inside case wall of the module, which is in turn mounted in an insulated sheet metal box. The original five pin plug connector was changed to an octal plug to accommodate this additional circuitry.

One 100 watt resistor is mounted on each side of the module, and both are energized by the available 120 VAC control voltage through the contacts of the thermostat. The two resistors are intentionally under driven to insure long life. This combination theoretically restricts the ambient temperature of the voltage controller between approximately 30°C and 55°C, plus the temperature rise of the RIC control cabinet due to miscellaneous heating. If necessary, the temperature band could be narrowed to produce the required accuracy. This would be determined by the performance tests.

Another factor affecting accuracy is a relatively predictable characteristic of the voltage controller. The original Acuvolt® device incorporates a quasi-RMS sensing circuit, which tends to regulate the output of the Acuvolt® at a voltage somewhere between an average and RMS value. Since the intensity and life of incandescent lamps is governed by the RMS current flowing through the filament, the most accurate method of regulation, from an application standpoint, would result from a true RMS sensing and control device. The average value accurately tracks the RMS value for a pure sine wave. However, as the wave shape is distorted from a pure sine wave, the average value deviates more and more from the RMS value.[2] This must be considered since the output wave shape of the Acuvolt® and also the RIC is slightly distorted due to the saturable reactor. Distortion varies with load as well as input voltage. Oscillograms of this phenomenon are shown in Appendix B for the RIC unit.

The final schematic of the RIC voltage controller is shown in Appendix A-5. This is basically the original controller with the addition of pins 6, 7 and 8 and the thermostat.

The output voltage of the RIC unit is applied to the full wave bridge through pins 1 and 2. The rectified D.C. voltage from the full wave bridge is applied to the voltage divider and filter network that is made up of R4, R7, R8, R9, C2, and C3. Any change in the output voltage of the RIC unit will appear as a signal across the voltage divider. This signal is applied to the base of the emitter follower Q3 which applies the signal to the emitter of Q2.

At Q2 the signal is compared to a reference voltage across zener diode CR10. The difference of the signal volt-

age and the reference voltage is amplified by Q2 and applied to C4. This voltage charges up C4, which has a charge time constant that is composed of C4 and the source impedance of Q2. C4 charges up until it reaches the voltage necessary to fire the unijunction transistor Q1. When Q1 fires a voltage appears across R10, which is applied to the gates of SCR1 and SCR2 of the RIC unit through C7 and C8 and pins 3, 4 and 5. This gate signal determines the conduction angle of SCR1 and SCR2, which thus allows the required amount of D.C. to flow through the control windings of the saturable reactor.

Packaging - The packaging of the RIC unit follows the URD concept as closely as possible incorporating features such as tamperproof construction, deadfront voltage access areas and low profile. The following description is illustrated by the photographs in Appendix B.

To insure compliance with the requirements of the strict environmental conditions, oil cooled rather than air cooled power components are used. This design is inherently suited for this purpose, since it is completely sealed off from the surrounding environment. Specially designed coils of unusually short heighth are used to achieve the maximum overall heighth requirement of 26 inches. The tank cover is bolted in place to permit access.

The input and output compartments are accessible through separate gasketed doors. The secondary side has a latch which may be pad-locked. Access to the primary high voltage area is made by unbolting the door from the inside of the secondary compartment. Lifting the hinged cover which is bolted in place through the top of the input and output compartments allows access to the tank. The end result is a tamperproof and dust tight enclosure.

All external connections are made from the bottom of the input and output compartments, which are completely isolated. The primary connections are made by two load break flower pot type bushings which are the only components accessible without disassembly. Removal of the dead front barrier reveals the lightning arrestor and fuse which protect the primary.

The secondary is terminated by six spade type terminals providing two sets of three-wire connections. Each three-

wire set is connected to the full winding of the output transformer and may provide to the load up to one-half the total capacity. This cross wiring insures a properly balanced load. Each hot lead of the output circuit is protected by lightning arrestors and circuit breakers.

The output compartment also contains three terminal blocks for remote and slave control connections. The RIC unit is designed so that three units may be operated simultaneously by remote control. The remote leads are connected to the top terminal block of the master unit and the lower two terminal blocks are connected to the slave units. Switching the master local control switch to the "local" or "off" position completely disables the remote control panel. However, switching one slave local control switch to the "local" or "off" position isolates that unit from the remote control panel and allows independant operation.

The control compartment is completely enclosed and dust tight. Again, the one door may be pad-locked and access to the other door is obtained by unbolting from the inside. Five two pole contactors (5,4,3,2, and 1) mounted in the left hand compartment provide five different output voltage steps for the three wire system. Pilot duty for the contactors is performed by five D.C. relays (B5, B4, B3, B2 and B1). D.C. relay 7 is actuated by the remote on-off switch through the A.C. relay 6. Relay 6 prevents remote operation of relay 7 under local control. All of the relays are mounted to the right of the right hand compartment.

Transformer T3 supplies power to the SCR bridge assembly which is mounted on two heat sinks. The assembly consists of SCR1, SCR2, RE1 and RE2 connected in a full wave bridge configuration. Transformer T4 senses the output voltage and transforms it to a usable level for the voltage controller. Rectifier RE3 is a free wheeling diode which assures turn-off of the SCR's and is required when switching SCR's into an inductive load. Resistor R1 increases the resistive component of this inductive load thereby improving the system response time which is governed by the L/R time constant formed by the saturable reactor and this resistor. Thyrectors RE4 and RE5 provide surge protection for critical components in the SCR bridge assembly and the voltage controller. The functions of the balance of components is easily determined from the schematic diagram in Appendix A-4.

TESTING

The completed system was performance tested by Hevi-Duty Electric except for all but one of the environmental tests. Since adequate facilities were not available, these tests were performed by Testing Laboratories, Inc., an independent testing agency. Copies of these test reports are located in Appendix D. The units fared very well in these tests in every respect except for slight deterioration of painted surfaces on the ACT's. This problem was traced to poor application of the primer on some of the units. However, as a precaution, all of the units were re-primed and re-painted. The units passed the tests inspite of this problem since operation was not impaired.

RCP-1 - The remote control panel was tested for dielectric strength at 1500 volts, 60 HZ for one minute. An operational check then completed the test.

ACT - The air cooled transformers were tested for dielectric strength by applying 4000 volts, 60 HZ to the primary for one minute. The secondary was given 1500 volts, 60 HZ for one minute with the lightning arrestor disconnected. Table 1 of Appendix C-1 shows the results of the ratio tests for the various conditions indicated. Table 2 and Table 3 of Appendix C-1 snow the results of efficiency/power factor and heat rise tests, respectively. To avoid possible confusion, it should be noted that the input current of 6.31 amperes (Table 2) for the ACT-300 is obviously in error. A value of 6.81 amperes would be more in line.

RIC-37 - The control portion of the regulator/intensity control unit was tested for dielectric strength by applying 1500 volts 60 HZ, for one minute. Rectifiers, SCR's, thyrectors, the 110 VDC power supply and the voltage controller were removed from the circuit while this test was performed.

Since the neutral leads of the power section are permanently connected to the case, the dielectric strength was tested by induced voltage.[3] The primary of the control transformer was disconnected and 240 volts 400 HZ was applied to the secondary of the buck-boost transformer for 18 seconds.

Table 4 in Appendix C-2 shows the results of the

efficiency and power factor tests. Table 5 lists the results of the temperature rise tests of the various compartments.

The results of the temperature rise test for the power components are shown in Table 6 of Appendix C-3. The unit was energized at full load unity power factor and operated continuously until the maximum temperature was reached. This maximum was determined by monitoring the temperature rise of the oil one inch below the oil level (top oil rise) until no significant change in the rise occurred. The actual temperature rise of each winding was determined by the resistance method,[4] as follows:

1. Cold resistance - The resistance of each winding was measured before the unit was energized.

2. Resistance at shut-down - At least three successive resistance readings were measured at recorded instances of time for each winding and then plotted back to zero time.

3. Two shut-downs were required to insure accurate data for such a large number of windings.

4. The temperature rise was then calculated by the following equation:

$$T = \frac{Rs - Rc}{Rc} (K + Tc) - (Ts - Tc)$$

where
- T = Temperature rise °C
- Rs = Resistance at snut-down
- Rc = Cold resistance
- K = Constant which varies for aluminum or copper.
  - Cu = 234.5
  - Al = 226
- Tc = Ambient temperature at time the cold resistance is measured.
- Ts = Ambient temperature at shut-down.

5. Example: Calculate the temperature rise of the Buck-boost common winding.

$$T = \frac{.7723 - .6555}{.6555} (226 + 28) - (24 - 28)$$

$$T = .1781 \times 254 + 4$$

$$T = 49.2°C$$

Table 7 of Appendix C-4 lists the regulation data for various combinations of load, input voltage and brightness position. The table indicates the regulation at the B5 position is well within the ±1%. Tolerance limits for any combination of load and input voltage. As the output voltage decreases, the regulation becomes less precise due to the regulation characteristics of the RIC output transformer. The actual ranges for the brightness positions are as follows:

B5 - $\pm^{0.2}_{0.1}$ %, B4 - $\pm^{0}_{1.9}$ %, B3 - $+^{0.5}_{1.6}$ %, B2 - $+^{1.1}_{-1.4}$ %, and B1 - $\pm^{2.0}_{-3.0}$ %.

<u>VOLTAGE CONTROLLER</u> - To insure proper operation of the voltage controller under severe temperature extremes, a small environmental chamber was constructed. Carbon dioxide was used to reduce the temperature below the ambient, and a 200 watt resistor was used to raise the temperature above the ambient. The temperature control module was then placed in this chamber and connected to the RIC unit.

Table 8 and the resultant Curve 1 in Appendixes C-5 and C-6 show the variation in temperature within the voltage controller due to the thermostat and heater resistors. During this test, the ambient temperature surrounding the module was held relatively stable at about -40°C. The curve indicates that the average temperature within the voltage controller was held to 51.5 ± 6.5°C and the period of oscillation was about 20 minutes. This temperature is higher than the 30°C originally designed, since the thermostat senses the case temperature which is lower than the actual ambient temperature.

Curve 2 in Appendix C-6 was taken from the same data and shows the variation of the RIC output voltage under the same conditions. The curve indicates that the voltage controller held the RIC output voltage to 240.25 ± 0.25 volts. This is roughly a 0.1% variation due entirely to the oscillating ambient temperature within the voltage controller. The period of voltage oscillation is also about

20 minutes, which would have a negligible effect on the brightness of an incandescent lamp, even if the voltage change was large enough to be noticeable. This curve also indicates a maximum warm-up period of 12 minutes from the time of energization to the time that the voltage reaches the 1% regulation band. However, even at the point of energization, the voltage is only 1.67% below the nominal value, which makes it doubtful that a warm-up period would be necessary. In either case the voltage is on the low side, which would present no danger of overdriving the lamps. It snould be noted that these voltages are no-load values, although the results may be extrapolated to any load condition from zero to full load.

Table 9 and the resultant Curve 3, Curve 4 and Curve 5 in Appendixes C-7 and C-8 show the changes in the RIC output voltage for full load with 2280, 2400 and 2640 volts input, while the ambient temperature of the voltage controller was varied from the minimum to the maximum temperature. These input voltages represent the minimum, nominal and maximum input voltages to be encountered by the RIC unit. The low temperature limit was taken from Curve 1. The high temperature limit was taken from the compartment heat rise test. Table 5 indicates the inside of the voltage controller has a temperature rise of 41.5°C. Therefore, with an ambient temperature of 55°C, the interior of the controller would reach a temperature of 96.5°C. The curves indicate, therefore, an average voltage of 242.7 ± 2 volts or about ± 0.8% deviation over the entire temperature range for this particular unit. On production units this range could extend 40°C to 100°C which would result in roughly a ± 1% deviation. Therefore, on this basis no change was made to the original temperature setting of the thermostat.

SYSTEM - To insure proper operation and interfacing of the many components, the complete system was tested using tapped resistors to simulate the various loading conditions of incandescent lamps. A total of three ACT-500's and eighteen ACT-300's were used to achieve a load of 34.5 KVA. At the same time, the control system was tested for proper operation with simulated 20,000 foot lengths of #19 AWG cable connected between the RCP-1 and the RIC. The simulated cable consisted of four pairs of 174 ohm resistors. Each pair of resistors was connected with a 0.32 microfarad capacitor to simulate the resistance and capacitance of a 20,000 foot

length of multi-conductor telephone wire. Table 10 on Appendix C-9 lists the data taken during these tests. Upon analysis of the regulation data in Table 7, the voltage controller was adjusted to slightly increase the output voltage. This accounts for the generally higher readings.

CONCLUSION

All of the components of the redesigned Approach Lighting System operate satisfactorilly and conform to the specifications of the contract. Any statement as to the success or failure of this system in achieving the main purpose of the redesign - to produce a less costly system without sacrificing integrity or reliability - will most certainly be mere speculation until the system has completed extensive field testing.

REFERENCES

1. NEMA Official Standards Proposal, publication number TR-P1-1970, March 18, 1970.

2. Stuart P. Jackson, Dennis M. Swing and Kenneth A. Wallace, "A Simple Effective Current Regulator for Airport Lighting", IEEE Transactions On Industrial Electronics Control Instrumentation, Vol. IECI-15, No. 1, November 1968.

3. USA Standard, Test Code For Distribution, Power And Regulating Transformers And Shunt Reactors, Induced Potential Tests, paragraph 3.3, C57.12.90 - 1968.

4. USA Standard, Test Code For Distribution Power And Regulating Transformers, And Shunt Reactors, Determination Of Average Measured Winding Temperature By The Hot-Resistance Method, paragraph 6.1.2, C57.12.90 - 1968.

FAA WJH Technical Center
00090127

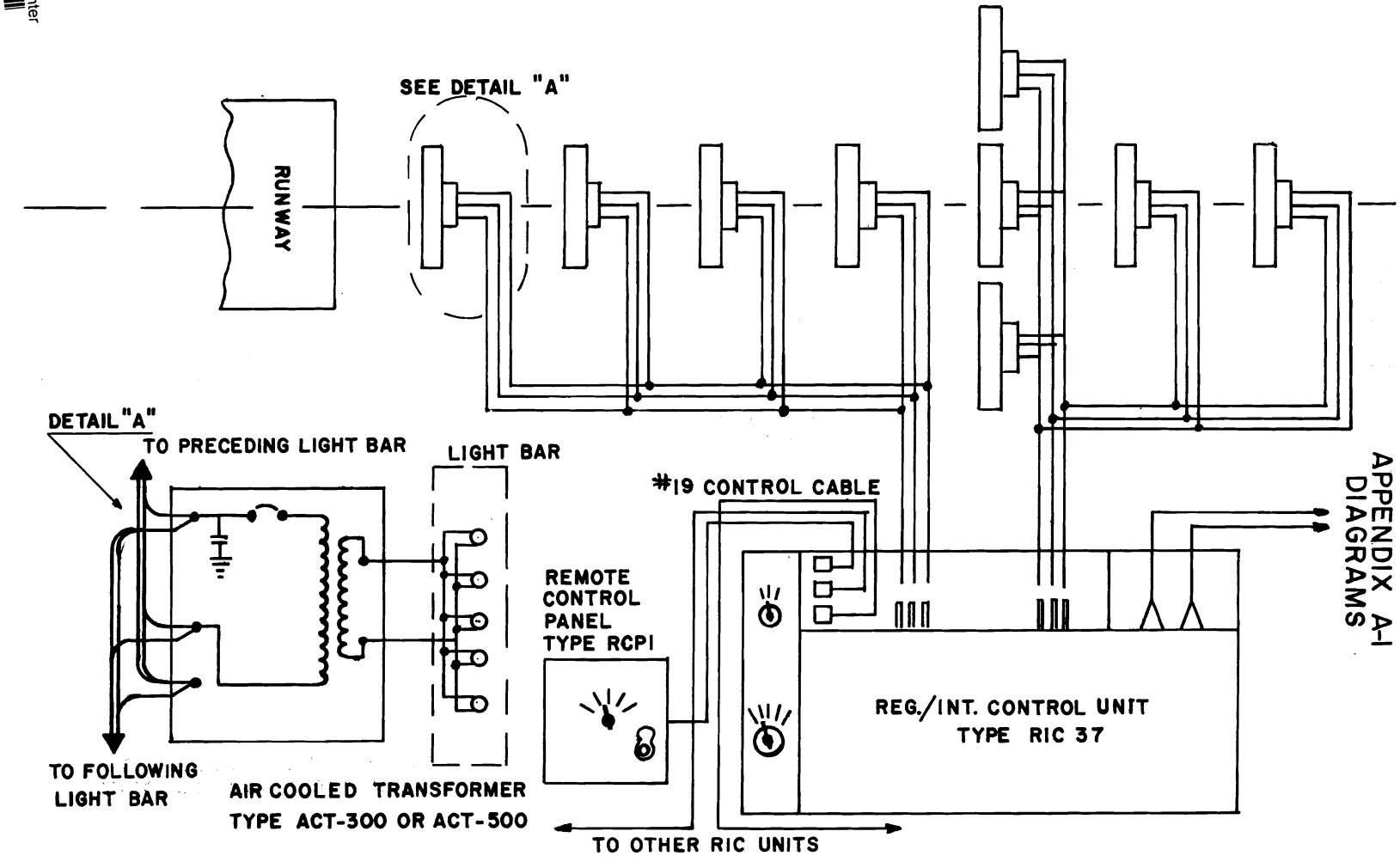

ALS BLOCK DIAGRAM

APPENDIX A-2
DIAGRAMS

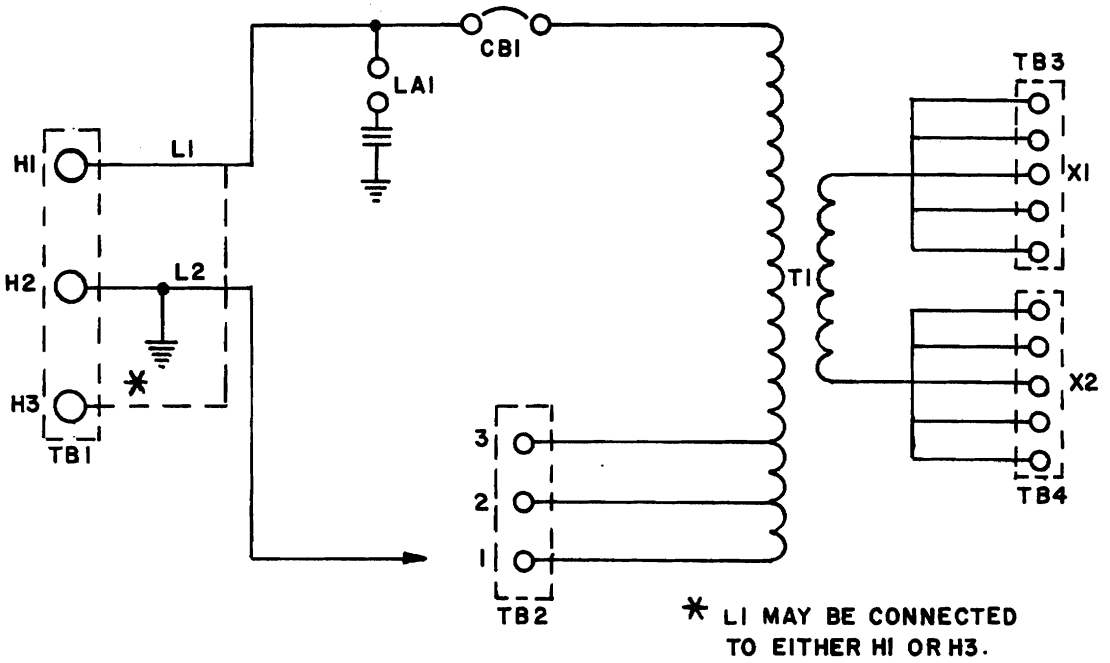

CB1 CIRCUIT BREAKER 480 VOLTS 15 AMPERES

LA1 LIGHTNING ARRESTER 650 VOLTS

VOLTAGES

TRANSFORMER	OUTPUT VOLTS	OUTPUT AMPS	INPUT VOLTS H1,H2 OR H3,H2	CONNECT L2 TO TERM.
ACT 300	15	100	240	1
ACT 500	25	100	234	2
			228	3

ACT SCHEMATIC DIAGRAM

APPENDIX A-3
DIAGRAMS

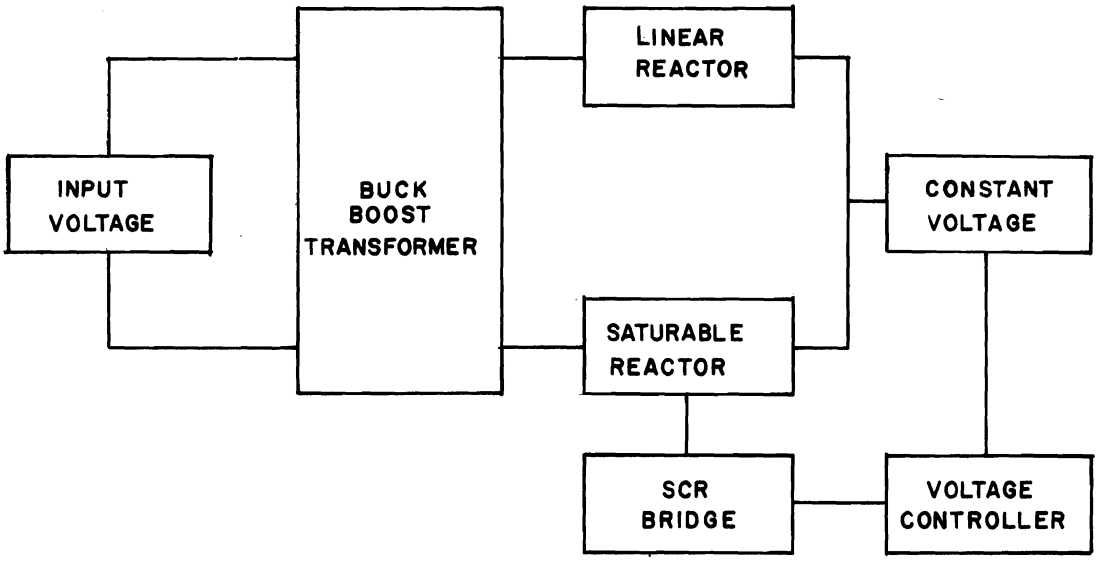

ACUVOLT BLOCK DIAGRAM

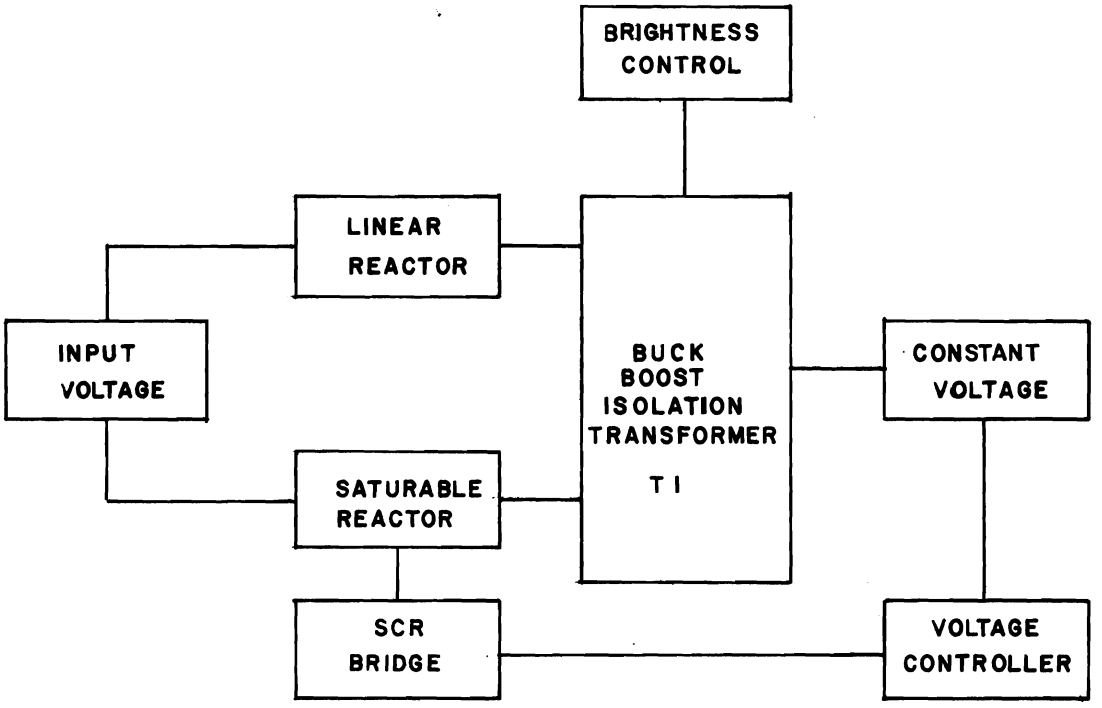

RIC BLOCK DIAGRAM

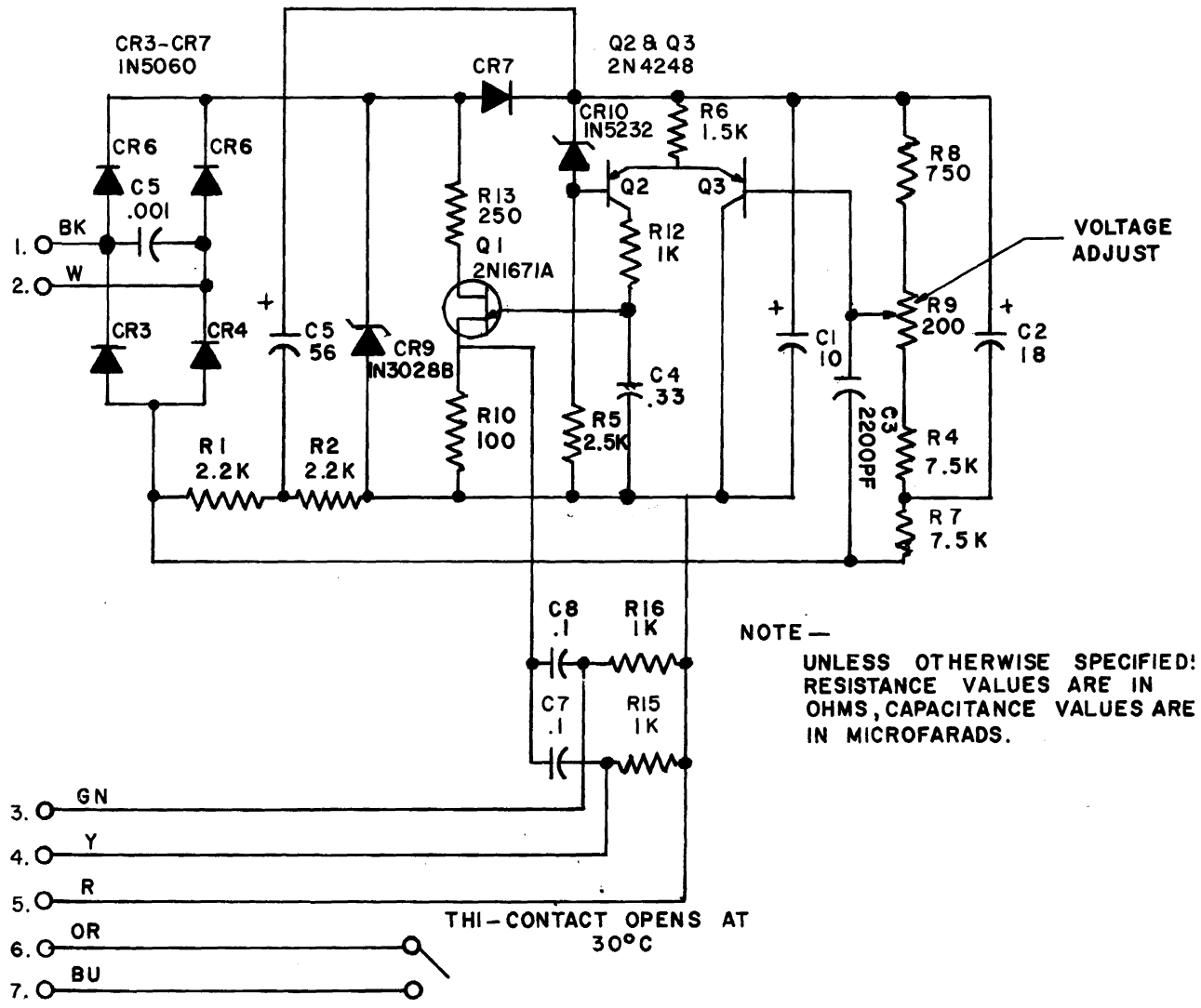

NOTE—
UNLESS OTHERWISE SPECIFIED: RESISTANCE VALUES ARE IN OHMS, CAPACITANCE VALUES ARE IN MICROFARADS.

VOLTAGE CONTROLLER SCHEMATIC DIAGRAM

SW2 DRUM SWITCH

SWITCH	CONTACTS CLOSED							
POSITION	A	B	C	D	A1	B1	C1	D1
REMOTE		X		X	X	X	X	X
OFF								
LOCAL	X		X					

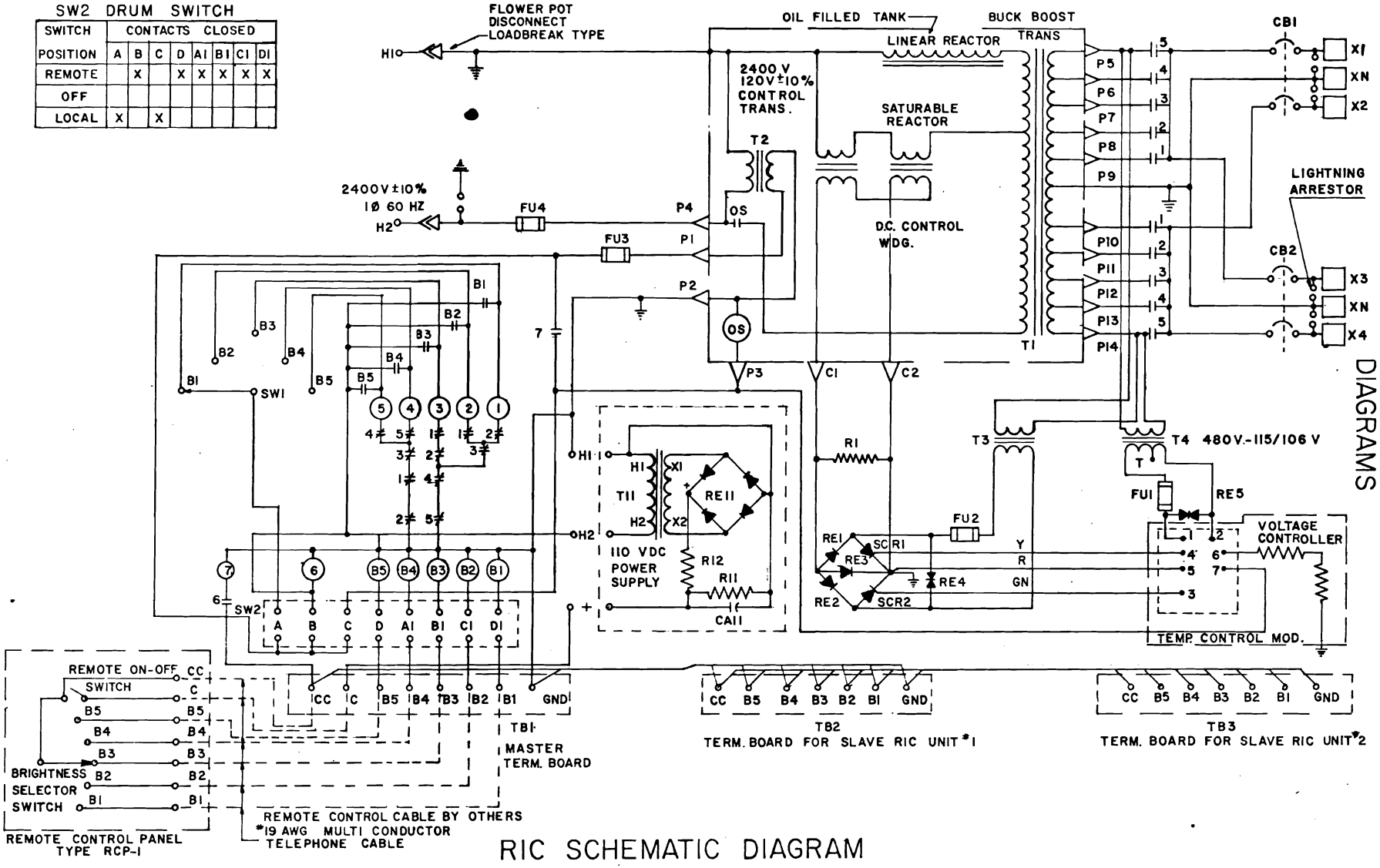

RIC SCHEMATIC DIAGRAM

APPENDIX A-6

ALS MATERIAL LIST

RCP-1

Toggle Switch SPST
120 VAC 16 Amperes

Rotary Switch 5 position
500 VAC 15 Amperes

ACT-300 And ACT-500

Circuit Breaker 2-Pole
480 VAC 15 Amperes

Lightning Arrestor 650 VAC

RIC-37

T1	Buck Boost Transformer	OS	1-Pole	115 VAC	
T2	Control Transformer	1,2	2-Pole	60A	120 VAC
T3	Rectifier Transformer	3,4	4-Pole	60A	120 VAC
T4	Sensing Transformer	5	4-Pole	100A	120 VAC
SR	Saturable Reactor	B1, B2, B3		DPST	110 VDC
LR	Linear Reactor	B4, B5, 7			
		6		DPST	120 VAC

FU1	1 Ampere	250 Volt	SW1	5 Pos.	500 VAC	15A
FU2	25 Amperes	250 Volt	SW2	3 Pos.		
FU3	6 Amperes	250 Volt				
FU4	30 Amperes	2400 Volt	R1	10 Ohm	100 Watt	

RE1, RE2, RE3 A40B, 200 PIV 20A

Lightning Arrestor 3000V

RE4 50 VRMS Surge Protector

Lightning Arrestor 650V 2-Pole

RE5 125 VRMS Surge Protector

Lightning Arrestor 175V

SCR1, SCR2 C35G, 150 PRV, 35A

Resistor 100 Ohm 100 Watt

Circuit Breaker 2-Pole

480 VAC 60A

110 VDC POWER SUPPLY

R11	1000 Ohm	20 Watt	C11	200 WVDC	250 MFD
R12	51 Ohm	5 1/4 Watt			
			RE11	1N5060	

T11 Rectifier Transformer

APPENDIX B-1

PHOTOGRAPHS

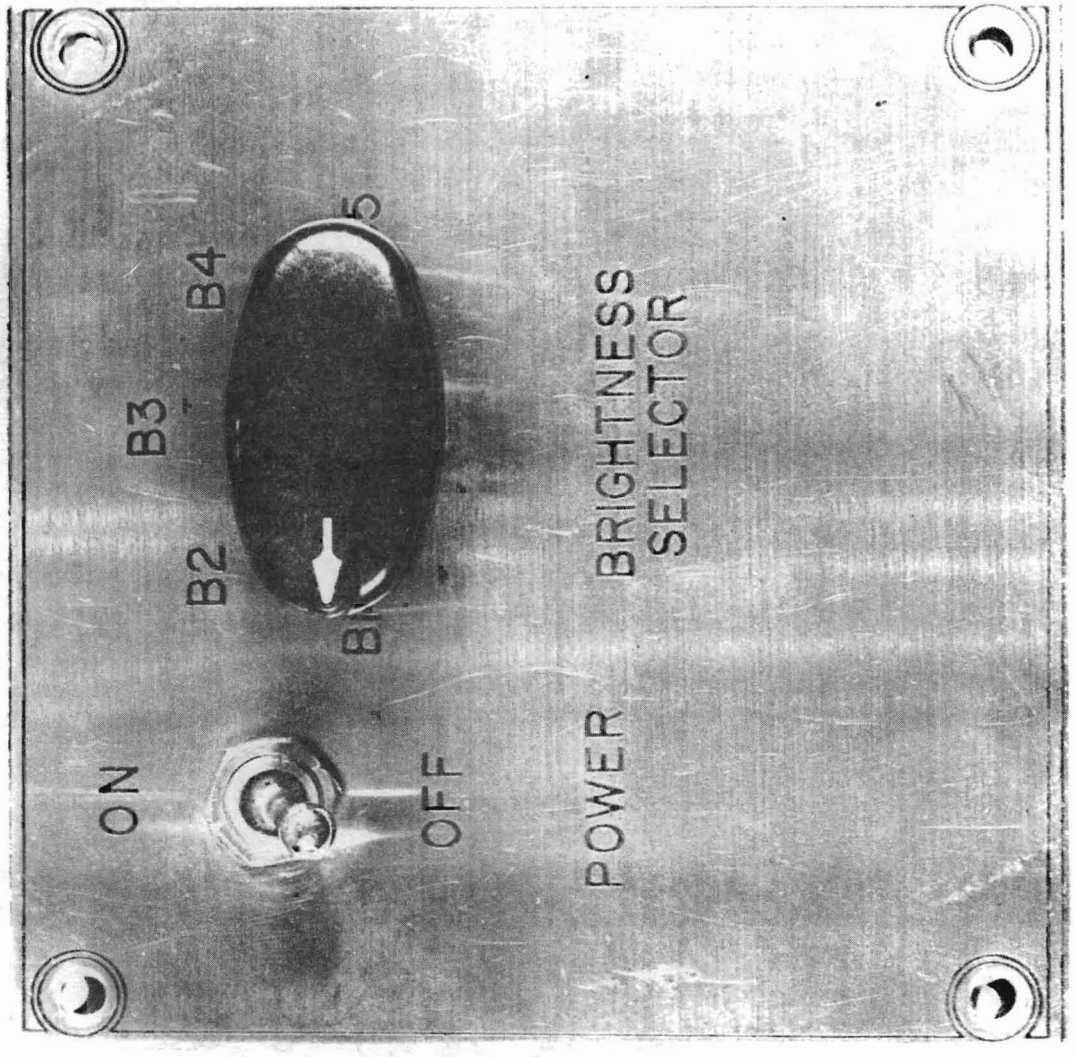

RCP-1 TOP VIEW

APPENDIX B-2

PHOTOGRAPHS

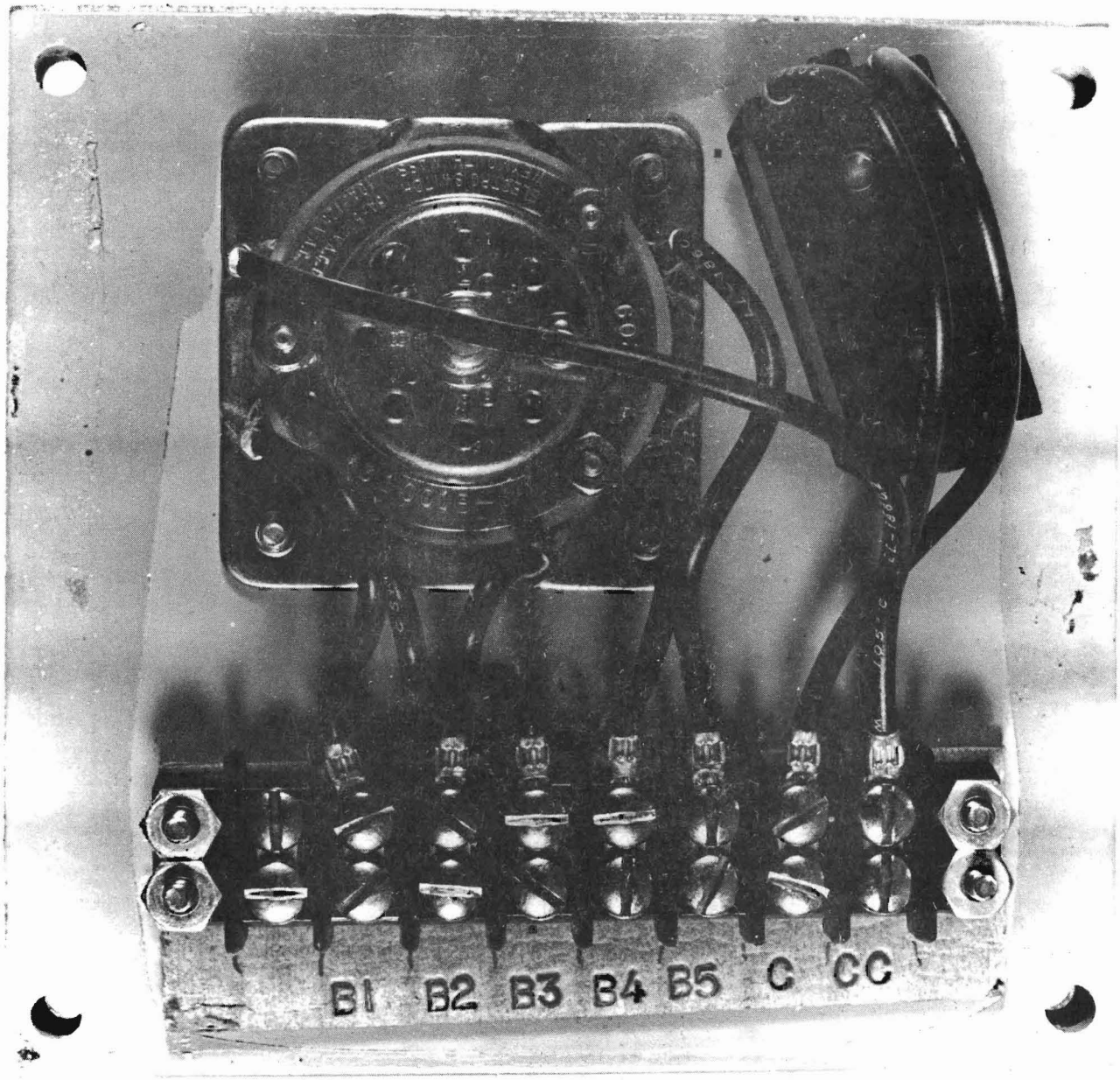

RCP-1 INTERIOR VIEW

APPENDIX B-3

PHOTOGRAPHS

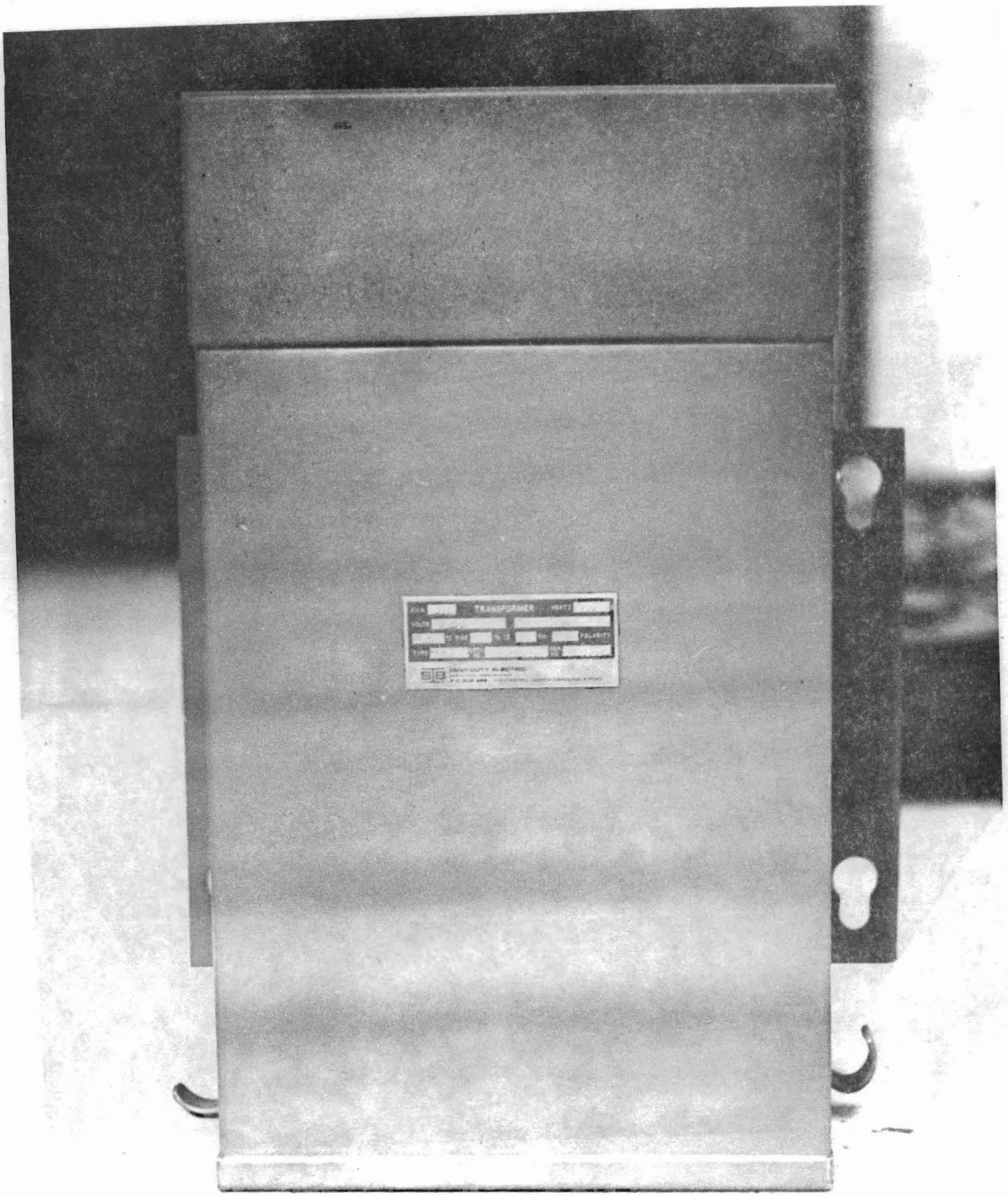

ACT FRONT VIEW

APPENDIX B-4

PHOTOGRAPHS

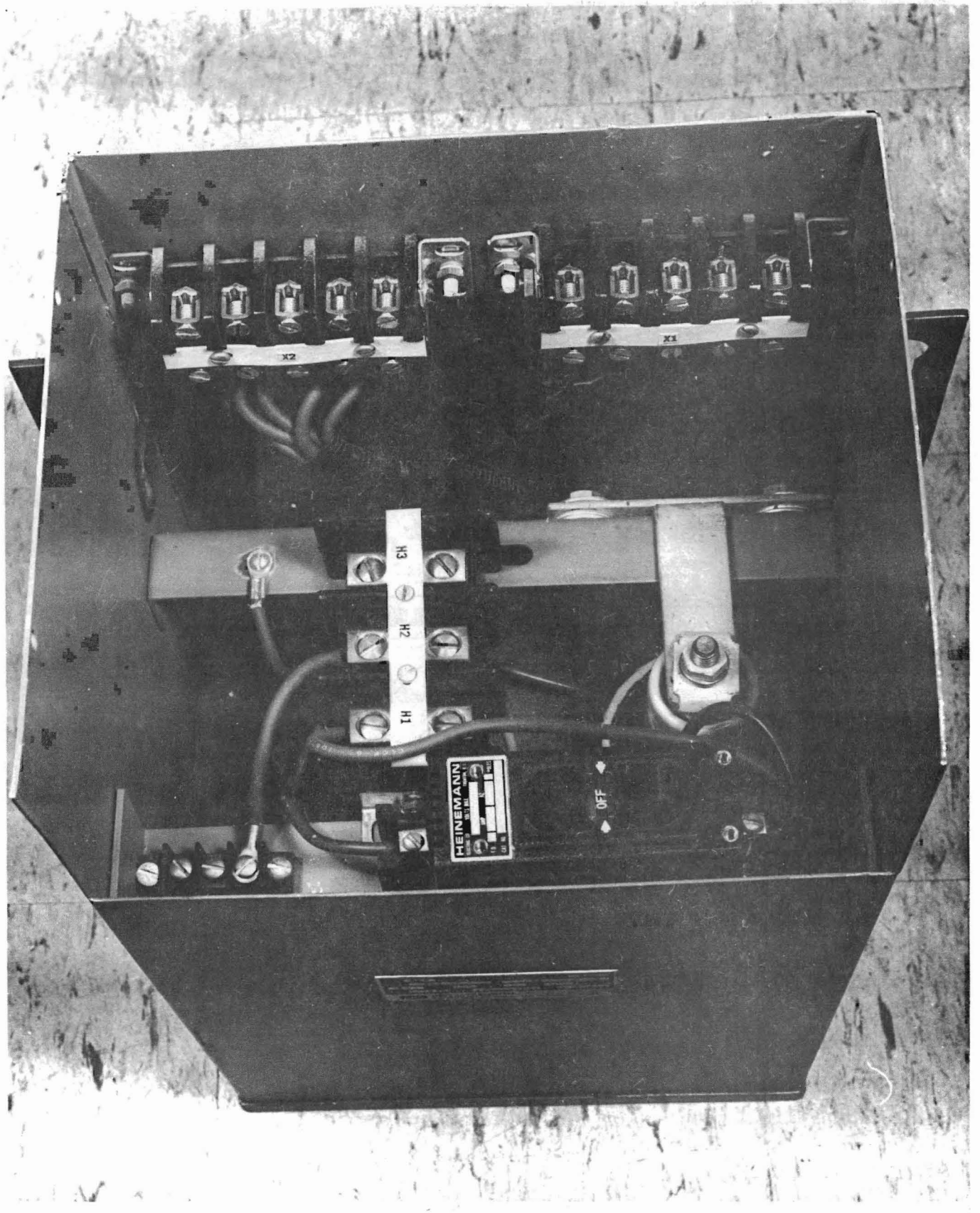

ACT INTERIOR VIEW

APPENDIX B-5

PHOTOGRAPHS

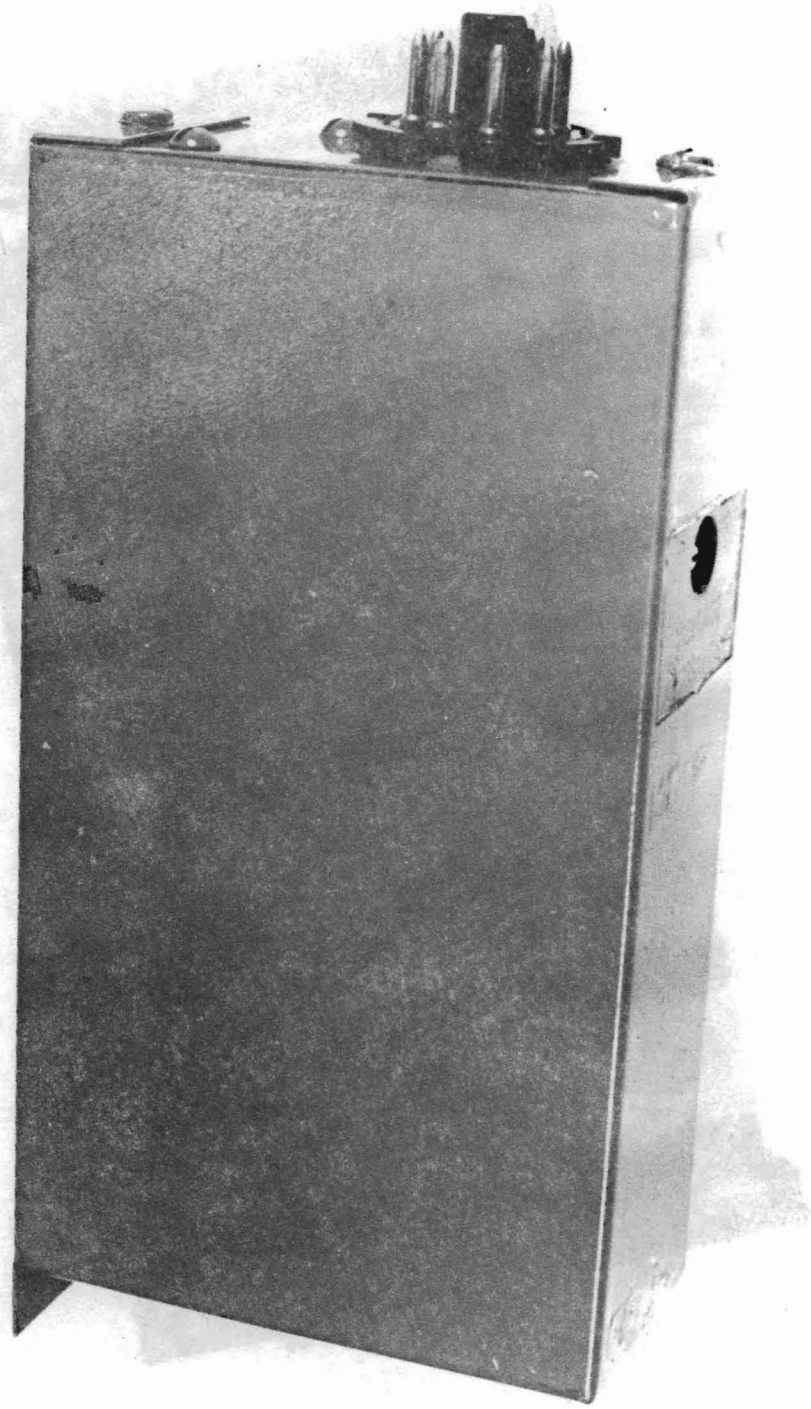

VOLTAGE CONTROLLER

APPENDIX B-6

PHOTOGRAPHS

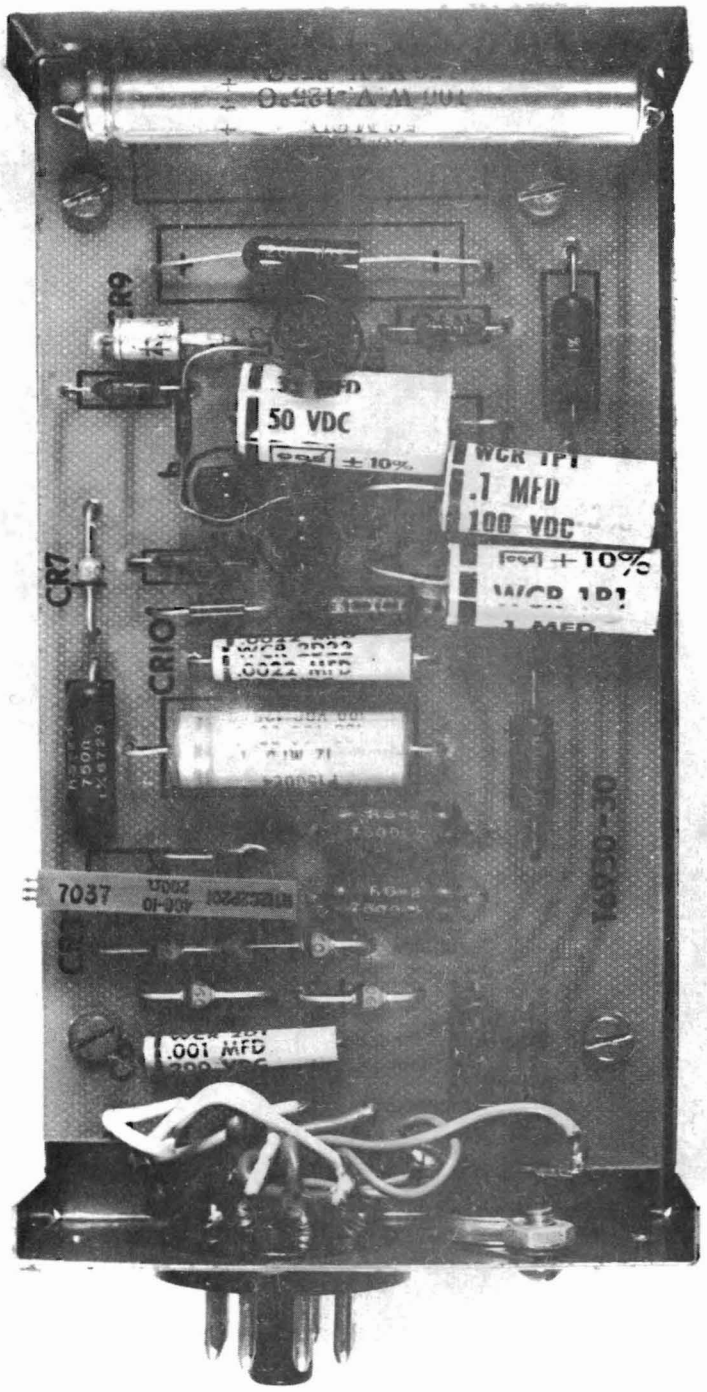

VOLTAGE CONTROLLER INTERIOR VIEW

APPENDIX B-7

PHOTOGRAPHS

APPENDIX B-8

PHOTOGRAPHS

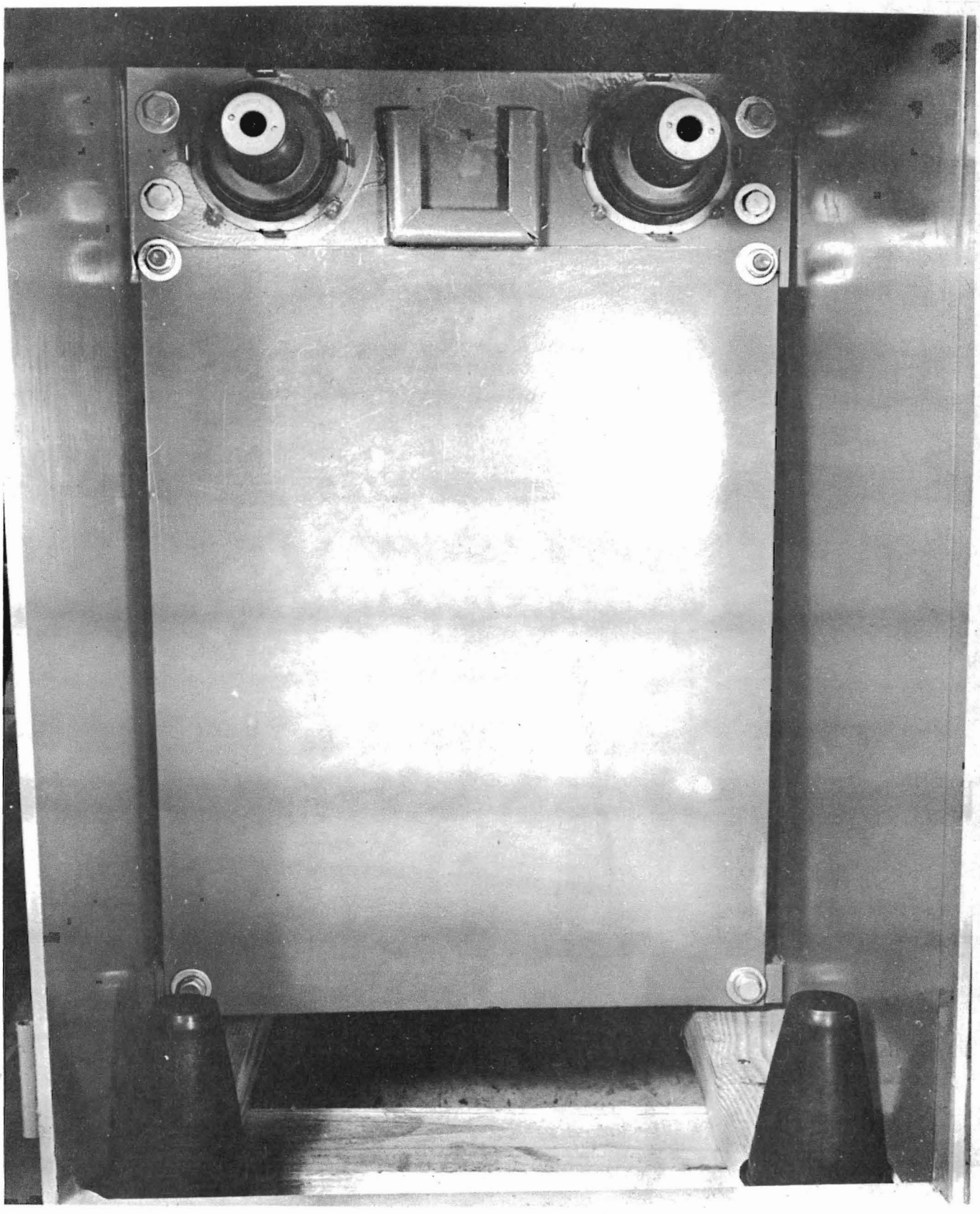

RIC-37 INPUT COMPARTMENT

APPENDIX B-9

PHOTOGRAPHS

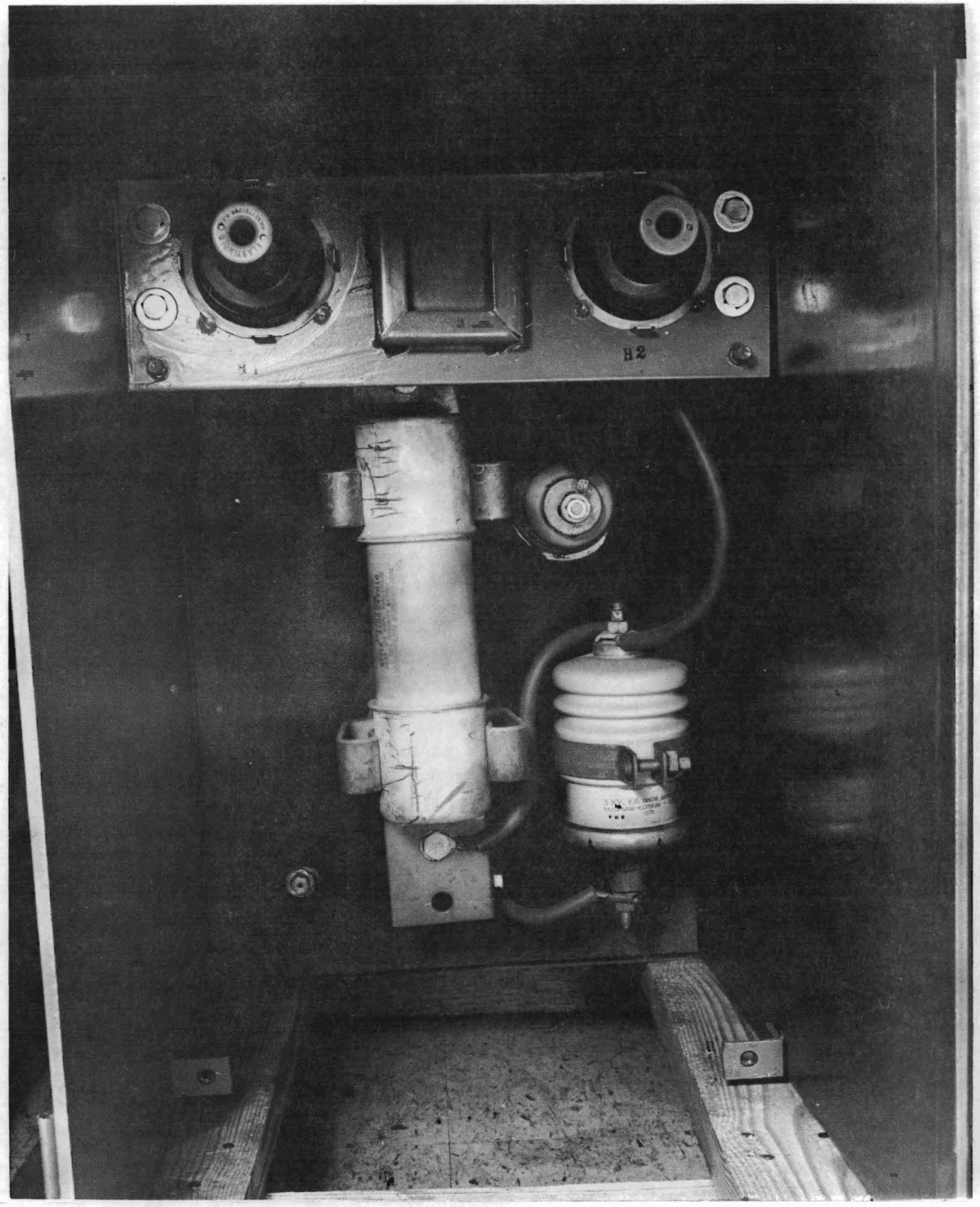

RIC-37 INPUT COMPARTMENT - DEADFRONT REMOVED

APPENDIX B-10

PHOTOGRAPHS

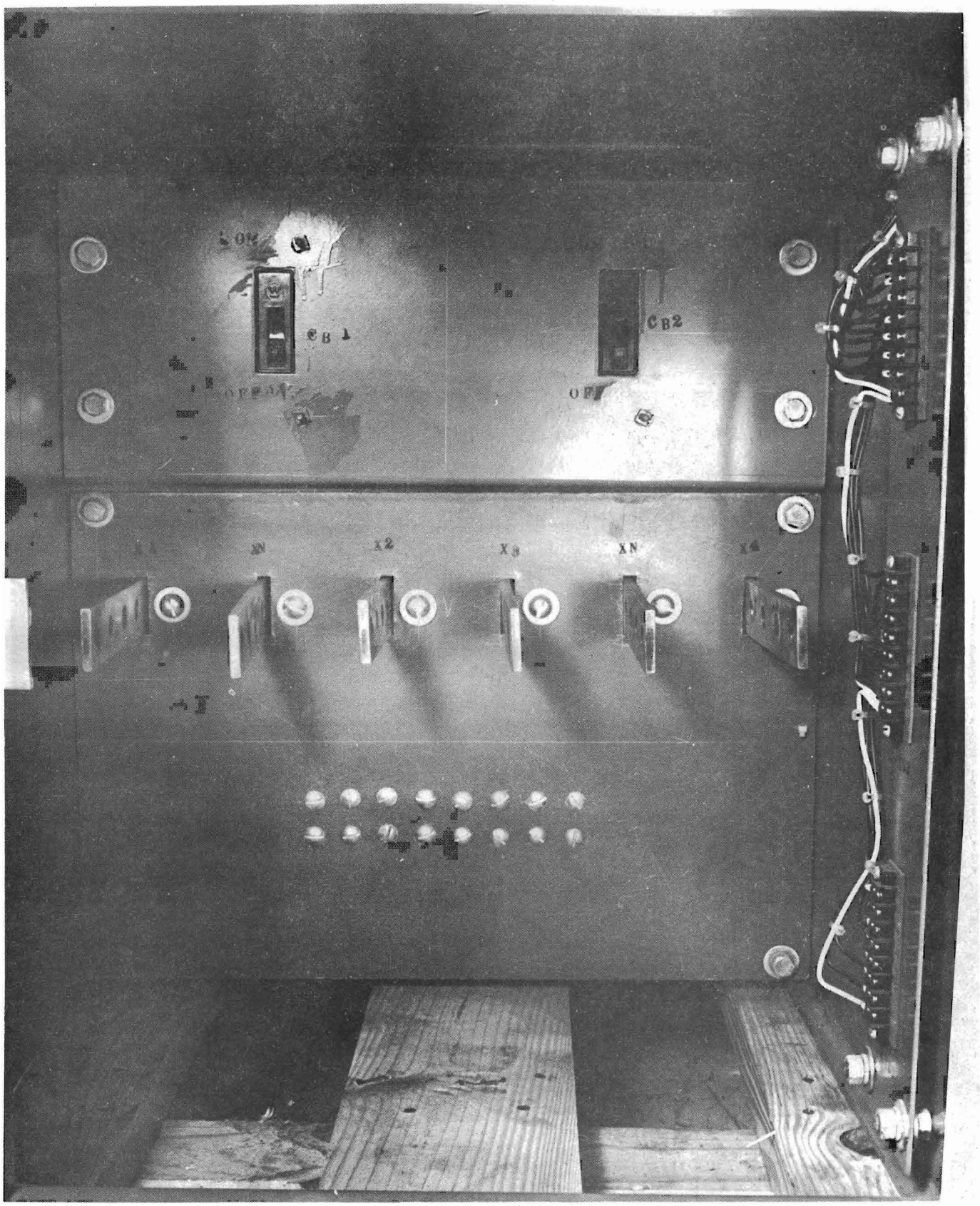

RIC-37 OUTPUT COMPARTMENT

APPENDIX B-11

PHOTOGRAPHS

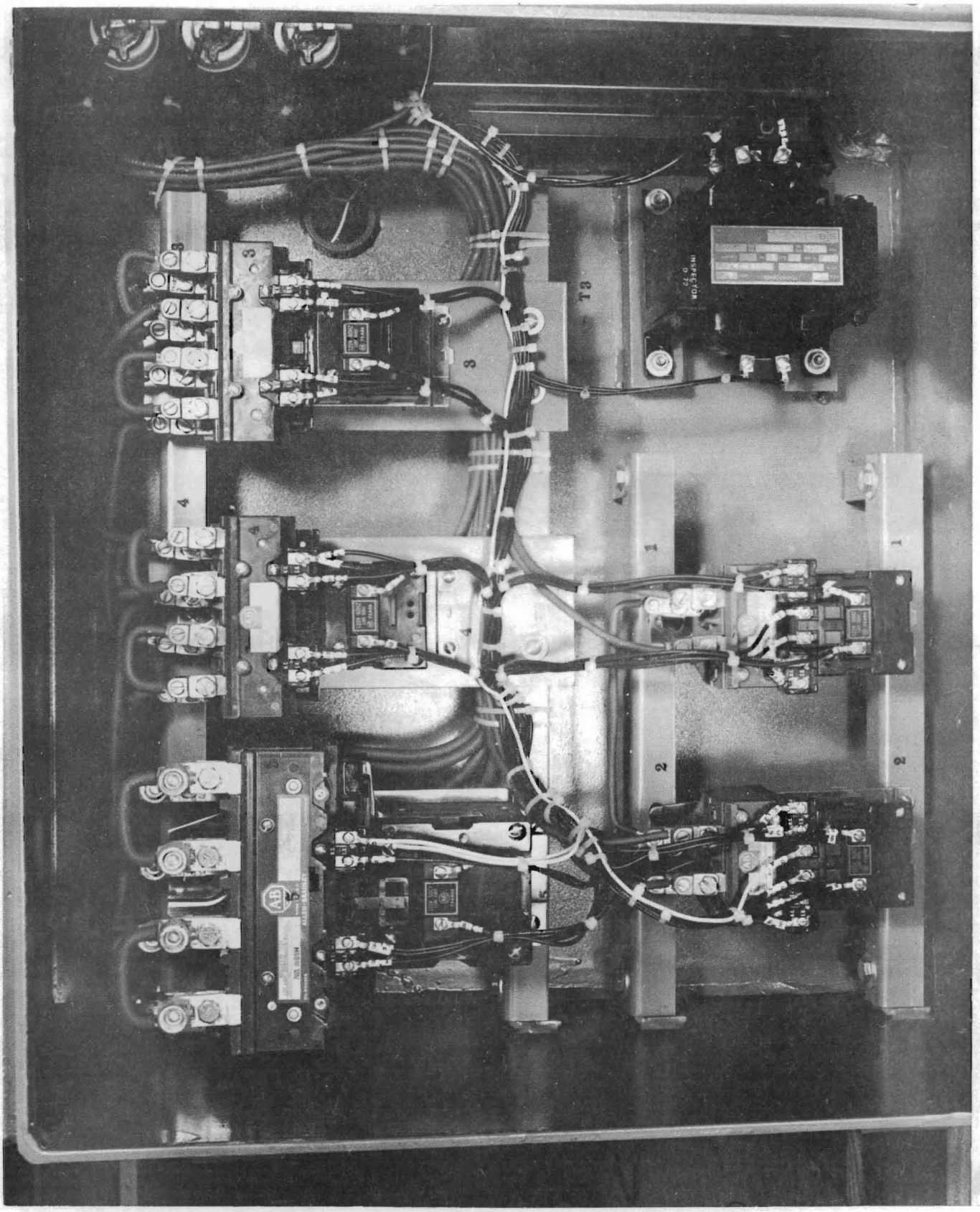

RIC-37 CONTROL COMPARTMENT - LEFT HAND SIDE

APPENDIX B-12

PHOTOGRAPHS

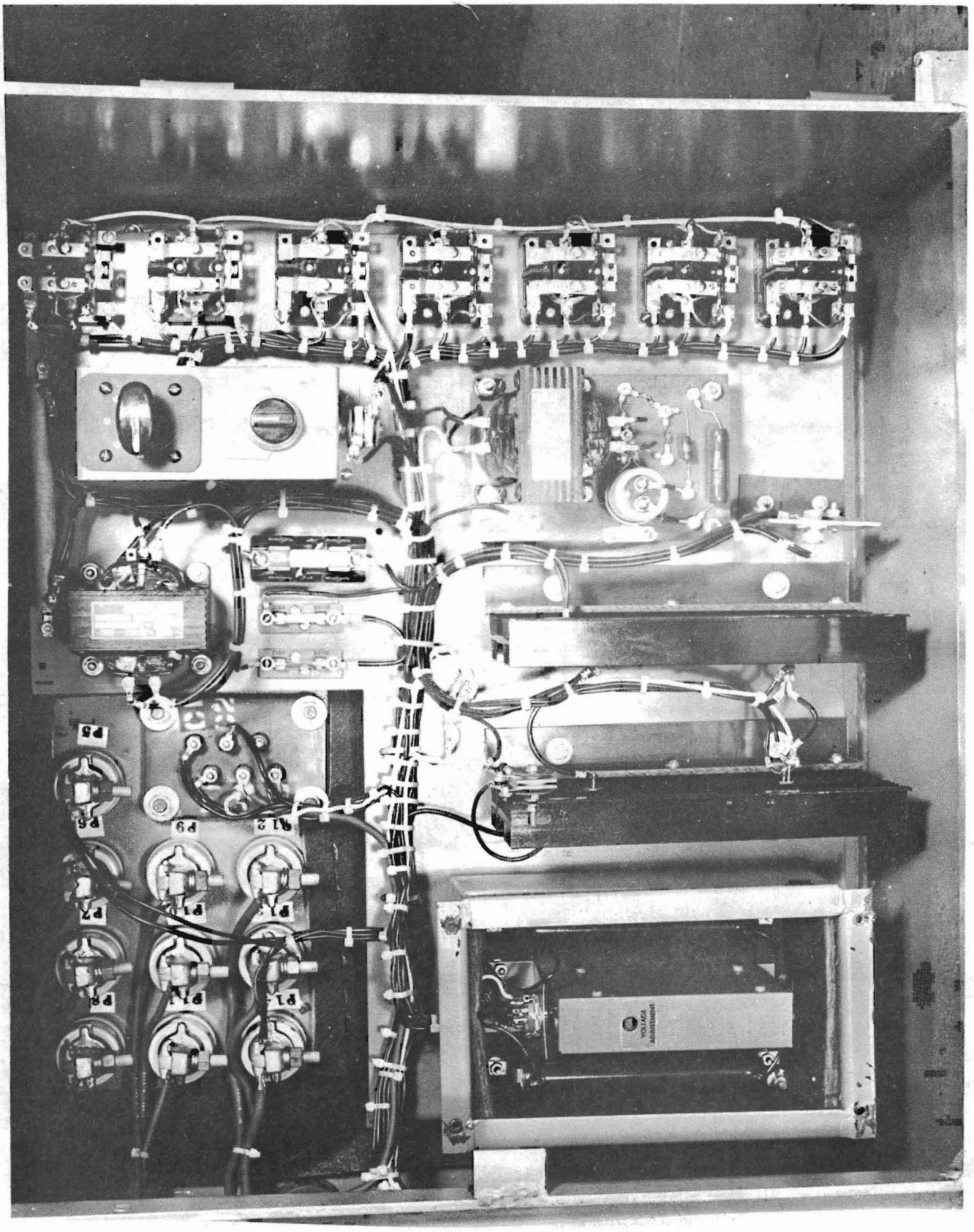

RIC-37. CONTROL COMPARTMENT - RIGHT HAND SIDE

APPENDIX B-13

PHOTOGRAPHS

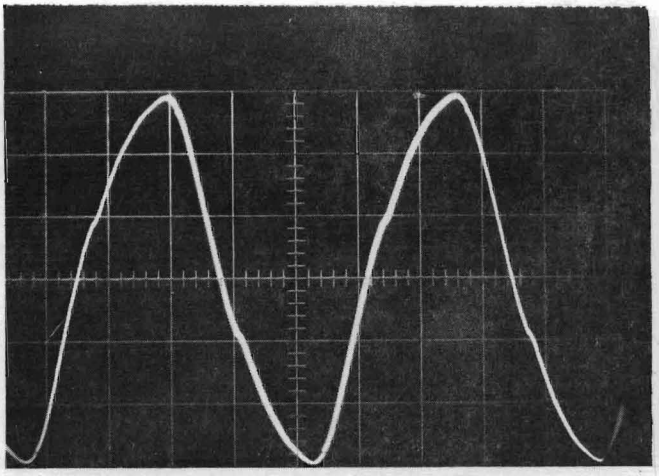

FULL LOAD WITH 2640 VOLTS INPUT

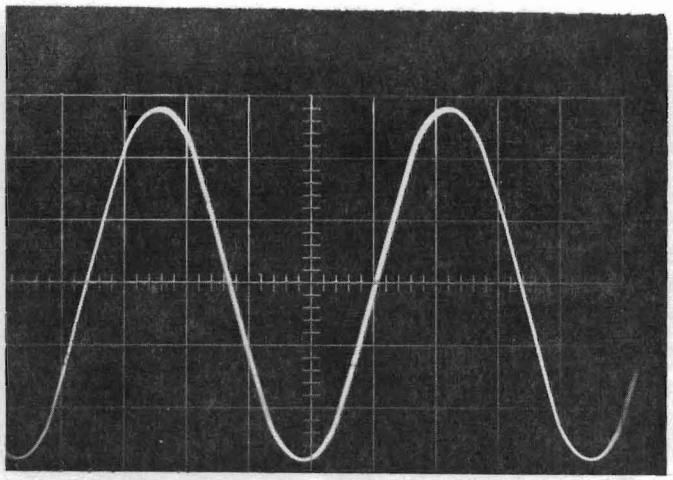

NO LOAD WITH 2640 VOLTS INPUT

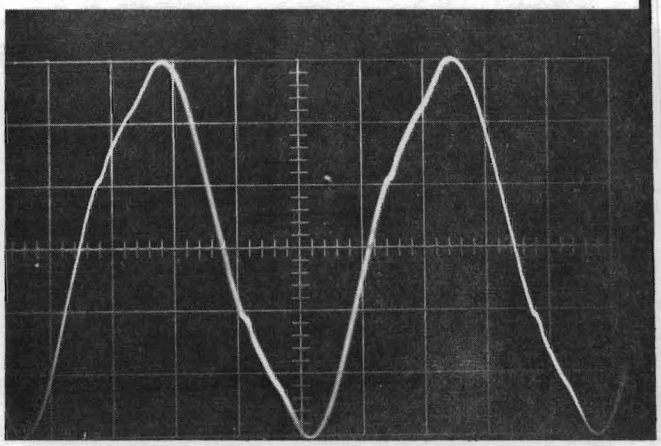

FULL LOAD WITH 2400 VOLTS INPUT

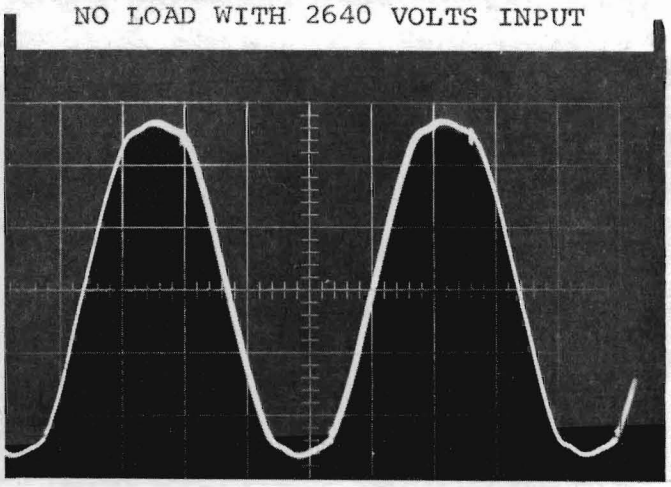

NO LOAD WITH 2400 VOLTS INPUT

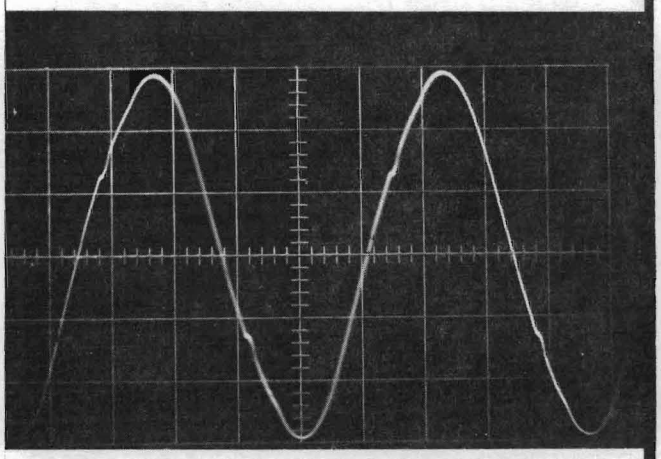

FULL LOAD WITH 2160 VOLTS INPUT

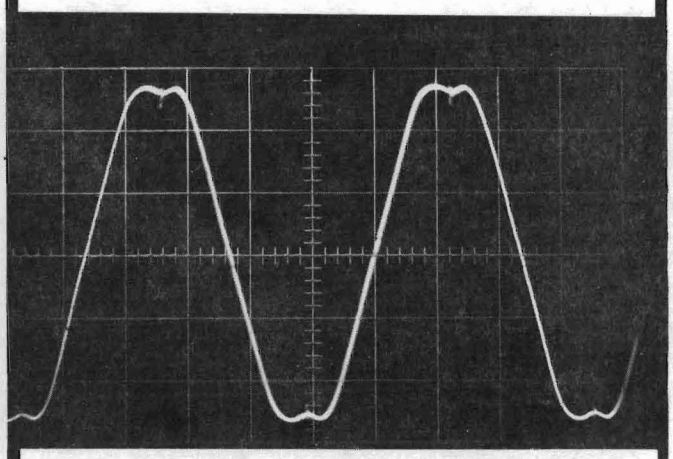

NO LOAD WITH 2160 VOLTS INPUT

Oscillograms of RIC-37 Output @ B5 Brightness (100 Volts/CM)

APPENDIX C-1

TEST RESULTS

I. ACT PERFORMANCE TESTS
Readings by Wm. Olson

Date ACT-300 April 8-12, 1972
ACT-500 February 21-24, 1972

Table 1 - Ratio Tests (Secondary voltage with 240 VAC applied to the primary)

UNIT	DESIGN VOLTAGE	COLD READINGS		HOT READINGS	
		NO LOAD	FULL LOAD	60% LOAD	FULL LOAD
ACT-300	15	16.3	15.7	15.3	15.0
ACT-500	25	26.2	25.3	25.7	25.2

Table 2 - Efficiency and Power Factor Tests (Unity power factor load)

UNIT	INPUT AMPERES	% LOAD	INPUT WATTS	OUTPUT WATTS	POWER FACTOR (%) BY METER	% EFFICIENCY
ACT-300	6.31	100	1600	1525	96.7	95.3
ACT-500	10.8	100	2584	2463	99.2	95.3

Table 3 - Temperature Rise Tests

UNIT	PRIMARY RISE (°C)	SECONDARY RISE (°C)	AVERAGE RISE (°C)
ACT-300	54.3	47.5	50.9
ACT-500	59.3	44.6	51.9

Maximum Limit 80°C

APPENDIX C-2

TEST RESULTS

II. RIC-37 PERFORMANCE TESTS

Table 4 - Efficiency and Power Factor Tests
(Unity power factor load)

INPUT VOLTAGE	INPUT AMPERES	% LOAD	INPUT WATTS	OUTPUT WATTS	POWER FACTOR (%) BY METER	% EFFICIENCY
2280	21.01	100	38400	36520	84.2	95.1
2400	18.68	100	38280	36680	84.9	95.8
2640	16.57	100	38160	36720	86.7	97.5

Readings by R.P. Marek
Ed Neydli

Date December 19, 1972

Table 5 - Compartment Heat Rise Test

LOCATION OF THERMOCOUPLE	AMBIENT TEMP. (°C)	MILL-VOLTS	TEMP RISE (°C)
Submersed in oil tank - one inch below oil level	24	1.97	48.5*
Submersed in oil tank - one inch above bottom of tank		1.23	30.8
Input Compartment - top center		0.66	16.7
Output compartment - tied to circuit breaker		0.68	17.2
Control compartment - tied to top of contactor No. 5		1.07	27.0
Control compartment - tied to jumper lead connecting SCR's		0.80	20.2
Control compartment - tied to local brightness selector knob		1.06	26.7
Control compartment - inside voltage controller case		1.67	41.5

Readings by R.P. Marek

Date August 10, 1972

* Maximum Limit 55°C

APPENDIX C-3

TEST RESULTS

Table 6 - Power Component Heat Rise Test

POWER COMPONENT	CON-DUCTOR	COLD RESIST-ANCE (OHMS)	AMBIENT TEMP. @ COLD (°C)	SHUTDOWN RESIST-ANCE (OHMS)	AMBIENT TEMP. @ SHUTDOWN (°C)	TEMP. RISE (°C) *
Buck-boost common winding	Al	0.6555		0.7723	24	49.2
Buck-boost extended winding	Al	0.3724		0.4418	24	51.4
Buck-boost secondary winding	Al	0.02776		0.03312	26	51.1
Linear Reactor	Cu	0.3740	28	0.4575	24	62.6
Saturable Reactor gate winding	Cu	0.3133		0.3678	24	49.7
Saturable Reactor control winding	Cu	0.4507		0.5271	26	46.5
Control Trans-former primary	Cu	55.97		64.86	26	43.7
Control Trans-former secondary	Cu	0.1408		0.1624	26	42.3

Readings by J. D. Tingen
R. P. Marek

Date Start August 8, 1972 8:45PM
Finish August 10, 1972 1:20PM

* Maximum Limit 65°C

APPENDIX C-4

TEST RESULTS

Table 7 - Regulation Tests (Remote Control)

BRIGHTNESS POSITION	INPUT VOLTAGE	BALANCED LOAD						UNBALANCED LOAD 60% ON X1 XN FULL ON X2 XN	
		NO LOAD		60% LOAD		FULL LOAD			
		X1 XN	X2 XN	X1 XN	X2 XN	X1 XN	X2 XN	X1 XN	X2 XN
B5	2280	239.0	239.0	239.0	239.0	239.5	239.5	239.5	238.8
	2400	239.5	239.5	239.8	239.8	240.0	240.0	240.0	239.0
	2640	240.5	240.5	239.5	239.5	239.1	239.1	239.5	238.8
B4	2280	148.8	148.8	148.2	148.2	148.0	148.0	148.3	147.5
	2400	149.0	149.0	148.5	148.8	148.0	148.0	148.5	147.5
	2640	150.0	150.0	149.2	149.0	148.6	148.5	149.2	148.3
B3	2280	119.4	119.4	118.8	118.7	118.5	118.3	119.0	118.3
	2400	119.5	119.5	118.8	118.7	118.5	118.4	119.0	118.2
	2640	120.2	120.1	119.7	119.7	119.4	119.2	119.8	119.2
B2	2280	70.3	70.3	69.8	69.8	69.4	69.3	69.8	69.0
	2400	70.4	70.4	70.0	70.0	70.0	70.0	70.0	69.3
	2640	71.0	71.0	70.0	70.0	69.8	69.8	70.0	69.6
B1	2280	49.6	49.6	49.2	49.2	48.8	48.8	49.2	48.7
	2400	49.8	49.8	49.4	49.2	48.8	48.8	49.2	48.8
	2640	51.0	51.0	50.0	50.0	49.6	49.6	49.4	48.5

Readings by H. Boyd Date September 8, 1972

APPENDIX C-5

TEST RESULTS

Table 8 - Output Voltage Variation Due To Voltage Controller Thermostat

TIME (HOURS)	LAB AMBIENT (MV)	CHAMBER AMBIENT (MV)	CHAMBER AMBIENT (°C)	CONTROLLER AMBIENT (MV)	CONTROLLER AMBIENT (°C)	OUTPUT VOLTAGE
2:45	.88	-2.43	-42.3	-2.43	-42.3	236.3
2:47	.88	-2.49	-44.3	-2.26	-37.5	236.2
2:49	.88	-2.48	-44.0	-1.95	-2.87	236.2
2:51	.88	-2.46	-43.3	-1.62	-19.6	236.5
2:53	.88	-2.45	-45.6	-1.28	-10.5	236.9
2:55	.88	-2.37	-40.6	-0.87	-00.2	237.3
2:56	.88	-2.73	-51.3	-0.71	4.3	237.5
2:57	.89	-2.65	-48.6	-0.51	9.7	237.7
2:58	.89	-2.54	-45.6	-0.28	15.5	238.0
2:59	.89	-3.43	-42.0	-0.15	18.7	238.2
3:00	.89	-2.55	-45.6	0.00	22.5	238.4
3:01	.89	-2.41	-41.5	0.20	27.5	238.6
3:02	.90	-2.55	-45.3	0.33	30.6	239.0
3:04	.90	-2.50	-44.0	0.77	41.5	239.4
3:05	.90	-2.40	-41.0	0.92	45.0	239.7
3:07	.90	-2.50	-44.0	1.10	49.3	240.0
3:08	.91	-2.43	-41.5	1.18	51.3	240.0
3:09	.91	-2.49	-43.3	1.22	52.3	240.1
3:10	.91	-2.50	-43.7	1.25	53.0	240.2
3:11	.91	-2.40	-40.7	1.26	53.2	240.2
3:12	.91	-2.58	-46.0	1.25	53.0	240.2
3:13	.92	-2.46	-42.0	1.23	52.7	240.3
3:15	.92	-2.49	-43.0	1.18	51.5	240.3
3:18	.92	-2.50	-43.3	1.06	48.7	240.2
3:19:30	.92	-2.45	-41.8	.98	46.8	240.1

APPENDIX C-5
TEST RESULTS

Table 8 - Continued

TIME (HOURS)	LAB AMBIENT (MV)	CHAMBER AMBIENT (MV)	CHAMBER AMBIENT (°C)	CONTROLLER AMBIENT (MV)	CONTROLLER AMBIENT (°C)	OUTPUT VOLTAGE
3:21	.94	-2.39	-39.5	0.89	45.3	240.1
3:22	.94	-2.59	-45.3	0.88	45.0	240.0
3:23	.94	-2.49	-42.3	0.88	45.0	240.0
3:24	.94	-2.37	-39.0	0.91	45.7	240.0
3:25	.93	-2.53	-44.0	0.95	46.4	240.0
3:26	.93	-2.53	-44.0	1.02	48.0	240.0
3:27	.93	-2.40	-40.0	1.11	50.2	240.0
3:28	.93	-2.48	-42.3	1.21	52.5	240.1
3:28:40	.93	-2.63	-44.5	1.29	54.2	240.2
3:30	.92	-2.50	-42.7	1.34	55.3	240.3
3:31	.92	-2.40	-39.7	1.38	56.2	240.3
3:33	.92	-2.45	-41.3	1.37	56.0	240.5
3:43	.90	-2.53	-44.3	0.98	46.4	240.1
3:44	.90	-2.47	-42.3	0.96	46.0	240.0
3:45	.90	-2.40	-40.3	0.93	45.3	240.0
3:46	.90	-2.43	-41.3	0.98	46.4	240.0
3:47	.90	-2.41	-40.7	1.00	46.8	240.0
3:49	.90	-2.44	-41.5	1.10	49.3	240.0
3:51	.90	-2.47	-42.3	1.27	53.4	240.0
3:51:20	.90	-2.47	-42.3	1.31	54.0	240.0
3:53	.90	-2.52	-44.0	1.37	55.5	240.1
3:54	.90	-2.44	-41.5	1.38	55.8	240.2
3:55	.90	-2.37	-39.5	1.37	55.5	240.4
3:58	.90	-2.33	-38.3	1.48	58.0	240.4
4:03	.92	-2.53	-43.7	1.16	51.0	240.3
4:05	.92	-2.33	-37.7	0.99	47.0	240.1

Readings by R.P. Marek Date June 13, 1972

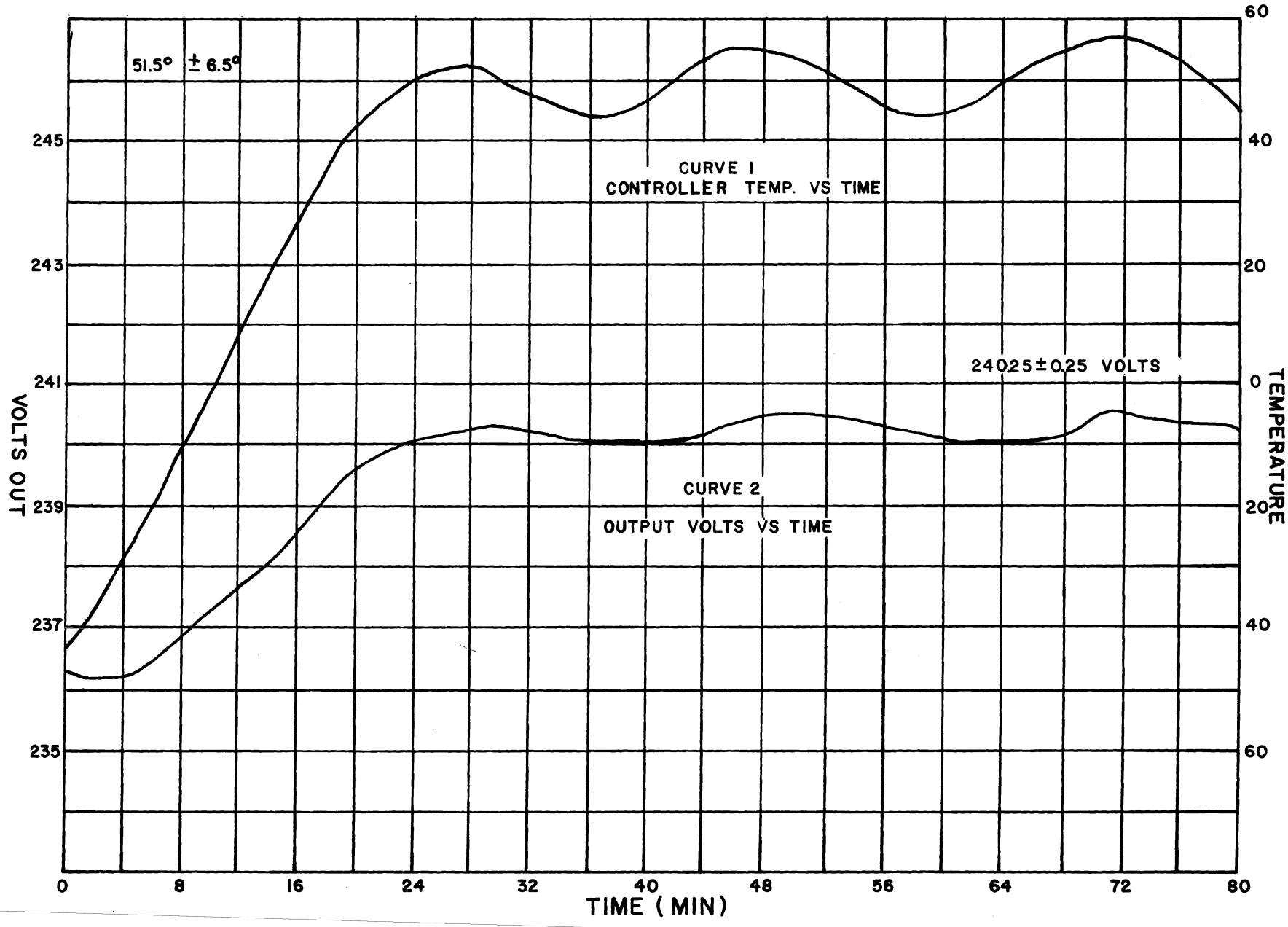

APPENDIX C-6
TEST RESULTS

APPENDIX C-7

TEST RESULTS

Table 9 - Variation Of Output Voltage At Various Voltage Controller Temperatures.

LAB AMBIENT (MV)	CONTROLLER AMBIENT (MV)	CONTROLLER AMBIENT (°C)	OUTPUT VOLTAGE @ FULL LOAD		
			2280	2400	2640
.90	-2.53	-44.7	237.2		
.90	-2.50	-44.0		237.0	
.90	-2.43	-41.7			236.5
.90	-2.27	-37.3	237.3		
.90	-2.23	-36.0		237.2	
.90	-2.19	-35.0			236.8
.91	-2.07	-28.5	237.5		
.91	-2.04	-27.7		237.3	
.91	-2.03	-27.3			237.0
.91	-1.78	-23.3	237.8		
.91	-1.76	-22.7		237.7	
.91	-1.73	-21.7			237.2
.92	-1.50	-15.3	238.0		
.92	-1.48	-14.7		238.0	
.92	-1.45	-14.0			237.7
.92	-1.28	- 9.5	238.2		
.92	-1.27	- 9.3		238.2	
.92	-1.25	- 8.7			237.9
.94	-1.02	- 2.0	238.4		
.94	-1.00	- 1.5		238.8	
.94	-0.98	- 1.0			238.2
.94	-0.67	7.0	239.0		
.94	-0.67	7.0		239.1	
.94	-0.65	7.5			238.9
.94	-0.19	19.0	239.7		
.94	-0.16	19.7		239.9	
.94	-0.13	20.3			239.5
.95	0.67	40.3	240.7		

APPENDIX C-7
TEST RESULTS

Table 9 - Continued

LAB AMBIENT (MV)	CONTROLLER AMBIENT (MV)	CONTROLLER AMBIENT (°C)	OUTPUT VOLTAGE @ FULL LOAD 2280	2400	2640
.95	0.71	41.3		240.9	
.95	0.77	42.5			240.6
.95	1.45	58.5	241.9		
.95	1.48	59.2		242.0	
.95	1.54	60.5			241.8
.95	2.18	75.0	242.9		
.95	2.20	75.4		243.2	
.95	2.25	76.5			242.9
.95	2.60	84.3	243.2		
.95	2.62	84.7		243.8	
.95	2.65	85.4			243.3
.97	2.85	90.2	243.8		
.97	2.87	90.8		244.0	
.97	2.90	91.3			244.2

READINGS BY R.P. MAREK DATE JUNE 17, 1972

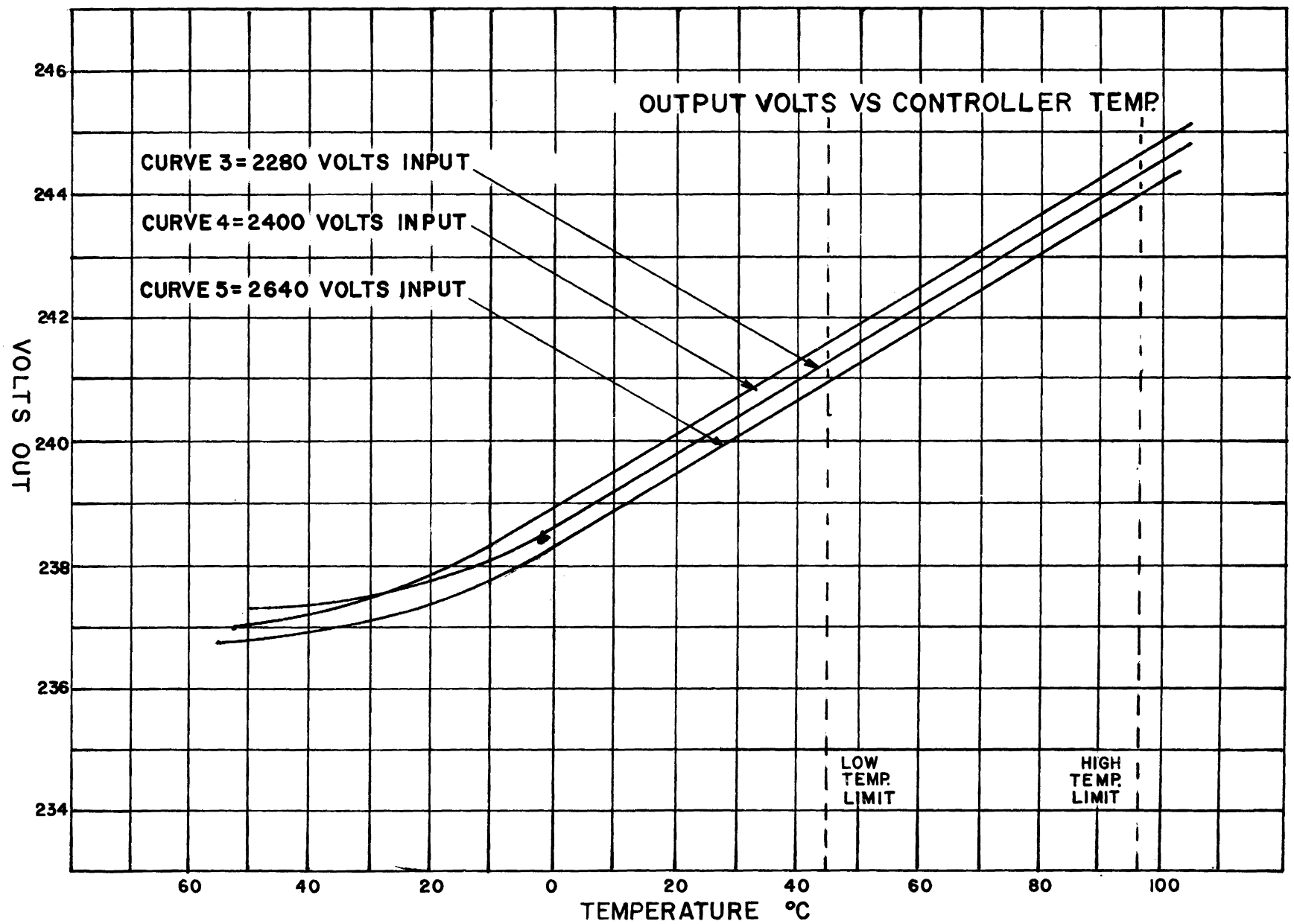

APPENDIX C-8
TEST RESULTS

APPENDIX C-9
TEST RESULTS

Table 10 - Regulation Tests With Simulated 20,000 Feet Of No. 19 AWG Control Cable

BRIGHTNESS POSITION	INPUT VOLTAGE	REMOTE CONTROL WITH 20,000 FEET OF CONTROL CABLE				LOCAL CONTROL			
		NO LOAD		93% LOAD		NO LOAD		93% LOAD	
		X1 XN	X2 XN	X1 XN	X2 XN	X1 XN	X2 XN	X1 XN	X2 XN
5	2280	239.8	239.8	240.2	240.2				
	2400	240.0	240.0	241.8	241.8	240.0	240.0	241.8	241.8
	2640	241.8	241.8	241.6	241.6				
4	2280	150.0	150.0	149.6	149.6				
	2400	149.8	149.8	149.2	149.4	149.8	149.8	149.5	149.6
	2640	151.0	151.0	149.9	149.9				
3	2280	120.0	120.0	119.2	119.2				
	2400	119.8	119.8	119.3	119.2	119.8	119.8	119.2	119.2
	2640	120.9	120.9	120.0	120.0				
2	2280	69.6	69.6	68.5	68.5				
	2400	69.6	69.7	68.6	68.7	69.6	69.7	68.5	68.7
	2640	70.0	70.0	69.0	69.1				
1	2280	49.7	49.7	48.8	48.8				
	2400	49.7	49.7	48.9	48.9	49.8	49.8	48.9	48.9
	2640	50.0	50.0	49.2	49.2				

Readings by Ed Neydli
R.P. Marek

Date December 19, 1972

APPENDIX D-1

INDEPENDENT TEST RESULTS

REPORT NO. 1 - Report Of Salt Spray Test On Type ACT-300 Transformer and Two 6 x 8 Inch Plates.

REPORT NO. 2 - Report Of Environmental Tests On Type ACT-500 Transformer.

REPORT NO. 3 - Report Of Environmental Tests On Approach Lighting System Regulator/Intensity Control Unit.

14-29 112th Street, College Point, N. Y. 11356 • (212) 939-4422
TESTING LABORATORIES, INC.
A Subsidiary of Telecommunications Industries, Inc.

REPORT OF SALT SPRAY TEST ON TYPE ACT-300 TRANSFORMER AND TWO (2) 6x8 INCH PLATES FOR HEVI-DUTY ELECTRIC GOLDSBORO, NORTH CAROLINA

TESTED BY	A. J. Avignone	ETL REPORT	4835
CHECKED BY	J. A. Ferreiro	TII S.O.	710-209
APPROVED BY	[illegible]	CUSTOMER P.O.	E-15656
DATE	27 OCTOBER 1972		
GOVERNMENT INSPECTOR	NONE		

ADMINISTRATIVE DATA

DATE 27 October 1972

PURPOSE OF TEST:	To determine the effects of Salt Spray Test on the physical characteristics of the submitted specimens.
MANUFACTURER:	HEVI-DUTY ELECTRIC Division of Sola Basic Industries P.O. Box 268 Goldsboro, North Carolina
MANUFACTURER TYPE AND SERIAL NUMBER:	Air Cooled Transformer, Type ACT-300 Serial No. 2332006 and two (2) 6x8 inch Plates
DRAWINGS SPECIFICATIONS OR EXHIBIT:	Tested in accordance with Procedure I, Paragraph 4.6.1 of MIL-E-5272C, Method 811.1 of Federal Test Method No. 151a and detailed instructions of client.
QUANTITY OF ITEMS TESTED:	One (1) Transformer Two (2) Plates
EQUIPMENT:	Unclassified
REPORT:	Unclassified
DATE TEST COMPLETED:	27 October 1972

TEST CONDUCTED BY: ENVIRONMENTAL TESTING LABORATORY OF:

TII TESTING LABORATORIES, INC.
14-29 112th STREET
COLLEGE POINT, NEW YORK 11356

DISPOSITION OF SPECIMEN: Returned to client

ABSTRACT: It is the function of the TII Testing Laboratories, Inc., as an impartial testing agency in performing this test, to subject the specimens to salt spray as specified in the detailed specifications.

ETL 4835

S.O. 710-209

FACTUAL DATA

1.0 DESCRIPTION OF TEST APPARATUS:

1.1 Salt Spray Chamber, Model CAR-1, Serial No. S-2873, manufactured by Industrial Pump & Filter Company. Calibration Due: 5 March 1973.

1.2 pH Meter, manufactured by Analytical Measurements.

1.3 Specific Gravity Indicator, manufactured by Central Scientific.

2.0 NAME PLATE DATA:

KVA 1.5 TRANSFORMER HERTZ 60
VOLTS 240 15
80°C RISE 1 PH SUB POLARITY
TYPE HST SPEC NO. ACT-300 SER. NO. 2332006

ETL 4835

S.O. 710-209

3.0 METHOD OF TEST:

The submitted specimens were subjected to salt spray testing in accordance with Procedure I, Paragraph 4.6.1 of MIL-E-5272C and Method 811.1 of Federal Test Method 151a.

Prior to the start of the Salt Spray Test, a sufficient amount of 5% salt solution was prepared in accordance with Method 811.1 of Federal Test Method 151a. The chamber was then preheated to 95°F, +2°F, -1°F, collection dishes were placed into the chamber and the chamber was calibrated to assure compliance with Method 811.1 of Federal Test Method 151a.

The specimens were then placed into the salt spray chamber and subjected to a salt spray test for a period of 168 hours, employing a salt solution of 5% at a temperature of 95°F, +2°F, -1°F. pH of the solution was maintained between 6.5 and 7.2.

After 168 hours of exposure, the specimens were removed from the chamber, gently washed in warm clear water and examined for corrosion.

Within one (1) hour, the transformer was subjected to electrical tests as follows:

> The primary of the transformer was energized with 240 volts AC and each of the five (5) secondaries was loaded with a 500 watt, 20 ampere lamp. Voltage drop across one lamp was then measured and recorded.

The above test was repeated after forty-eight (48) hours.

4.0 TEST RESULTS:

Post test visual examination revealed the following:

6 x 8 inch Plates:

Rust noted at the edges.

Exterior of the Transformer:

Rust noted at all the edges, seams and hardware of the cabinet.

Interior of the Transformer:

Rust noted inside at the bottom edge of the cabinet. Paint noted to be blistering around the bottom edge of the cabinet. Apparent varnish particles found on the bottom cover of the specimen.

No further physical damage noted as a result of this test.

Output Voltage Across One Lamp - 240 Volt Input:

Within one (1) hour	14.2 volts
After forty-eight (48) hours	14.2 volts

5.0 POST TEST EXAMINATION:

Post test examination revealed no evidence of any additional damage as a result of the stress of this test.

6.0 RECOMMENDATIONS:

None, data merely submitted.

7.0 CONCLUSIONS:

Final evaluation of the submitted specimens for conformance to the requirements of the detailed specifications will be accomplished by Hevi-Duty Electric upon review of results reported herein and further examination as required.

14-29 112th Street, College Point, N. Y. 11356 • (212) 939-4422
TESTING LABORATORIES, INC.
A Subsidiary of Telecommunications Industries, Inc.

REPORT OF ENVIRONMENTAL TESTS ON TYPE ACT-500 TRANSFORMER FOR HEVI-DUTY ELECTRIC GOLDSBORO, NORTH CAROLINA

TESTED BY	Fred Fischer	ETL REPORT	4861
CHECKED BY	J. A. Ferreira	TII S.O.	710-208
APPROVED BY	H Kip Malone	CUSTOMER P.O.	E-15656
DATE	29 NOVEMBER 1972		
GOVERNMENT INSPECTOR	NONE		

ADMINISTRATIVE DATA

DATE 29 November 1972

PURPOSE OF TEST:	To determine the effects of Environmental Tests on the physical and operational characteristics of the submitted specimen.
MANUFACTURER:	HEVI-DUTY ELECTRIC Division of Sola Basic Industries P. O. Box 268 Goldsboro, North Carolina 27530
MANUFACTURER TYPE AND SERIAL NUMBER:	Air Cooled Transformer, Type ACT-500 Serial No. 2334016
DRAWINGS SPECIFICATIONS OR EXHIBIT:	Tested in accordance with Test Notes for ACT-500 Environmental Tests, MIL-E-5272C and detailed instructions of client.
QUANTITY OF ITEMS TESTED:	One (1) only
EQUIPMENT:	Unclassified
REPORT:	Unclassified
DATE TEST COMPLETED:	17 November 1972

TEST CONDUCTED BY: ENVIRONMENTAL TESTING LABORATORY OF:

TII TESTING LABORATORIES, INC.
14-29 112th STREET
COLLEGE POINT, NEW YORK 11356

DISPOSITION OF SPECIMEN: Returned to client

ABSTRACT: It is the function of the TII Testing Laboratories, Inc., as an impartial testing agency in performing these tests, to subject the specimen to environmental tests as specified in the detailed specifications.

ETL 4861

S.O. 710-208

FACTUAL DATA

1.0 DESCRIPTION OF TEST APPARATUS:

1.1 Stratosphere Chamber, Model 36STR-100225, Serial No. 2703, manufactured by Tenney Engineering. Calibration Due: 27 November 1972.

1.2 Thermocouple Meter, Model 80200-7551-21, Serial No. AB6901-17, manufactured by Thermo-Electric. Calibration Due: 11 February 1973.

1.3 AC Voltmeter, Model 433-1906001, Serial No. 138974, manufactured by Weston Instrument Division. Calibration Due: 18 March 1973.

1.4 Digital Multimeter, Model 262A, Serial No. 2238, manufactured by United Systems Corporation. Calibration Due: 20 March 1973.

1.5 Sand and Dust Chamber, Model 36-S-D, Serial No. 2704, manufactured by Tenney Engineering. Calibration Due: 5 March 1973.

2.0 NAME PLATE DATA:

KVA 2.5	TRANSFORMER	HERTZ 60
VOLTS 240	25	
80° RISE	1PH	
SUB POLARITY		
TYPE HST	SPEC NO. ACT-500	
SER. NO. 2334016		

3.0 METHOD OF TESTS:

3.1 Temperature Tests:

3.1.1 Low Temperature Test:

The submitted Transformer was placed in a temperature-altitude test chamber. One thermocouple was installed on the core of the transformer and one near the top of the output compartment, close to the Circuit Breaker. Prior to test both thermocouple readings were recorded. Primary of the transformer was energized with 240 volts AC; each of the five (5) secondaries was loaded with a 500-watt, 20-ampere lamp.

Chamber temperature was then lowered to -40°C and maintained until the temperature of the transformer core had stabilized. Voltage across one lamp was then measured and recorded.

The test chamber was then returned to room ambient conditions and the sp cimen was examined visually for evidence of physical damage.

3.1.2 High Temperature Test:

The test described in Paragraph 3.1.1 was repeated at +55°C while maintaining relative humidity at 15% or less.

3.2 Altitude Tests:

The test chamber was then evacuated to simulate an altitude of 3300 feet and the test described in Paragraph 3.1.1 was repeated at temperatures of -40°C, +25°C and +55°C.

METHOD OF TESTS (continued)

3.3 Humidity Test:

The specimen was then subjected to the following temperature-humidity conditions:

a) Chamber temperature was increased from a value between 20°C and 38°C to 71°C in two (2) hours.

b) Chamber temperature was maintained at 71°C for a period of six (6) hours.

c) Chamber temperature was decreased from 71°C to a value between 20°C and 38°C in sixteen (16) hours.

The above cycle was repeated for a total of three (3) times. Relative humidity was maintained at 95% throughout the test.

During the last six (6) hours of the test, the specimen was operated as described in Paragraph 3.1.1. At the conclusion of the third cycle, the test chamber was returned to room ambient conditions and the specimen was examined visually for evidence of physical damage and corrosion.

3.4 Sand and Dust Test:

The submitted specimen was subjected to sand and dust test in accordance with Paragraph 4.11.3 of MIL-E-5272C.

The specimen was placed into a sand and dust test chamber and subjected to the following conditions for a period of three (3) hours:

Temperature - 25°C (77°F)
Sand and Dust Density - 0.1 to 0.25 grams per cubic foot
Sand and Dust Velocity - 2500 ± 500 feet per minute
Relative humidity maintained at 30% or less.

METHOD OF TESTS:

Sand and Dust Test (continued)

The sand and dust used was of angular structure and had characteristics as follows:

1. 100 percent of the sand and dust would pass through a 100-mesh screen U.S. Standard Sieve Series.

2. 98 ± 2 percent of the sand and dust would pass through a 140-mesh screen U.S. Standard Sieve Series.

3. 90 ± 2 percent of the sand and dust would pass through a 200-mesh screen U.S. Standard Sieve Series.

4. 75 ± 2 percent of the sand and dust would pass through a 325-mesh screen U.S. Standard Sieve Series.

5. Chemical analysis of the sand and dust was as follows:

Substance	Percent by Weight
$Si\ O_2$	97 to 99
$Fe_2\ O_3$	0 to 2
$Al_2\ O_3$	0 to 1
$Ti\ O_3$	0 to 2
Mg O	0 to 1
Ign losses	0 to 2

At the conclusion of the test period, the specimen was removed from the chamber and allowed to cool to room temperature. Accumulated dust was removed by gentle brushing and wiping. The specimen was then visually examined for evidence of physical damage.

4.0 TEST RESULTS:

The following data was noted and recorded during the above detailed test procedure:

4.1 Initial readings:

Temperature - °C Transformer Core	Output Compartment	Chamber Ambient	Input Voltage (volts)	Voltage Across One Lamp (volts)
25.0	25.0	25.0	240.0	24.2

4.2 Temperature Tests:

The following readings were taken after stabilization:

	Temperature - °C Transformer Core	Output Compartment	Chamber Ambient	Input Voltage (volts)	Voltage Across One Lamp (volts)
Low Temperature	-40.0	-40.0	-40.0	240.0	24.3
High Temperature	55.0	55.0	55.0	240.0	23.9

No physical damage or operational malfunction noted as a result of this test.

4.3 Altitude Tests:

The following readings were taken after stabilization:

Altitude (feet)	Chamber Ambient	Temperature - °C Transformer Core	Output Compartment	Input Voltage (volts)	Voltage Across One Lamp (volts)
3300	-40.0	-40.0	-40.0	240.0	24.3
3300	+25.0	+25.0	+25.0	240.0	24.2
3300	+55.0	+55.0	+55.0	240.0	23.9

There was no evidence of physical damage or operational malfunction noted as a result of this test.

TEST RESULTS (continued)

4.4 Humidity Test:

The following readings were taken at the start and at the end of the six-hour operational period:

	Input Voltage (volts)	Voltage Across One Lamp (volts)
Start of Operational Period	240.0	24.0
End of Operational Period	240.0	23.9

Slight peeling of paint was noted at the front face of the specimen. No further physical damage or operational malfunction noted as a result of this test.

4.5 Sand and Dust Test:

No physical damage or operational malfunction noted as a result of this test.

Post test measurements:

Input voltage - 240.0 volts

Voltage across one lamp - 23.4 volts

5.0 POST TEST EXAMINATION:

Post test examination revealed no evidence of physical damage as a result of the stress of these tests.

6.0 RECOMMENDATIONS:

None, data merely submitted.

7.0 CONCLUSIONS:

Final evaluation of the submitted specimen for conformance to the requirements of the detailed specifications will be accomplished by Hevi-Duty Electric upon review of results reported herein and further examination as required.

14-29 112th Street, College Point, N. Y. 11356 • (212) 939-4422
TESTING LABORATORIES, INC.
A Subsidiary of Telecommunications Industries, Inc.

REPORT OF ENVIRONMENTAL TESTS ON APPROACH LIGHTING SYSTEM REGULATOR/INTENSITY CONTROL UNIT FOR HEVI-DUTY ELECTRIC GOLDSBORO, NORTH CAROLINA

TESTED BY	Joseph R. Odum	ETL REPORT	4837
CHECKED BY	J. A. Ferreiro	TII S.O.	710-208
APPROVED BY	H Kip Molnar	CUSTOMER P.O.	E-15656
DATE	1 NOVEMBER 1972	CONTRACT NO. DOT-FA71 A-2633	
GOVERNMENT INSPECTOR	NONE		

( )

ADMINISTRATIVE DATA

DATE 1 November 1972

PURPOSE OF TEST:	To determine the effect of Environmental Tests on the physical and operational characteristics of the submitted specimen.
MANUFACTURER:	HEVI-DUTY ELECTRIC Division of Sola Basic Industries P. O. Box 268 Goldsboro, North Carolina 27530
MANUFACTURER TYPE AND SERIAL NUMBER:	Approach Lighting System Regulator/Intensity Control Unit Type RIC-37, Serial No. G143018
DRAWINGS SPECIFICATIONS OR EXHIBIT:	Tested in accordance with Test Notes for RIC-37 Environmental Tests, MIL-E-5272C and detailed instructions of client.
QUANTITY OF ITEMS TESTED:	One (1) only
EQUIPMENT:	Unclassified
REPORT:	Unclassified
DATE TEST COMPLETED:	30 October 1972

TEST CONDUCTED BY: ENVIRONMENTAL TESTING LABORATORY OF:

TII TESTING LABORATORIES, INC.
14-29 112th STREET
COLLEGE POINT, NEW YORK 11356

DISPOSITION OF SPECIMEN: Returned to client

ABSTRACT: It is the function of the TII Testing Laboratories, Inc., as an impartial testing agency in performing these tests, to subject the specimen to environmental tests as specified in the detailed specifications.

ETL 4837

S.O. 710-208

( )

FACTUAL DATA

1.0 DESCRIPTION OF TEST APPARATUS:

1.1 Walk-in Chamber, Model WI-TR-90250, Serial No. 5415, manufactured by Tenney Engineering. Calibration Due: 25 November 1972.

1.2 Thermocouple Meter, Model 80200-7551-21, Serial No. AB6901-17, manufactured by Thermo-Electric. Calibration Due: 11 February 1973.

1.3 AC Voltmeter, Model 433-1906001, Serial No. 138973, manufactured by Weston Instrument Division. Calibration Due: 18 March 1973.

1.4 AC Volt-Amp Meter, Clamp-on, Model 633, Serial No. 29629, manufactured by Weston Instrument Division. Calibration Due: 18 December 1972.

1.5 AC Voltmeter, Model 433-1906001, Serial No. 138974, manufactured by Weston Instrument Division. Calibration Due: 18 March 1973.

2.0 NAME PLATE DATA:

Approach Lighting System
Regulator/Intensity Control Unit
made for
Department of Transportation
Federal Aviation Administration
Type RIC-37 S/N G143018
Single Phase 60 Hz Gal. Oil 50
Input Volts 4160 Grd. Y/2400 Input Amps 20
Output KVA 37
480/240, 300/150, 240/120, 140/70, 100/50
Contract DOT-FA71 A-2633
Hevi Duty Electric
Division of Sola Basic Industries
P.O. Box 268
Goldsboro, North Carolina 27530

3.0 METHOD OF TESTS:

The submitted specimen was placed in a temperature-altitude-humidity test chamber and connected to externally located input power and output load in accordance with Figure 1 of this report. A total of seven (7) thermocouples was attached to the specimen at locations designated by the client on Drawing No. J-6145303W31.

3.1 Standard Tests:

Standard Tests to assure compliance with Paragraph 3.8 of MIL-E-5272C were performed as follows:

3.1.1 Thermocouple Readings:

Thermocouple outputs were measured and recorded.

3.1.2 B5 Brightness Output Voltage:

The specimen was energized with 2400 volts, 60 Hz. With the Remote Control Panel selector switch at B5 position, the output voltages between X_1-X_n and X_2-X_n were recorded at one-minute intervals for a period of fifteen (15) minutes.

3.1.3 Operation Check:

To prove proper operation, the output voltages between X_1-X_n and X_2-X_n for positions B4, B3, B2 and B1 were recorded.

3.2 Temperature Test:

Temperature of the chamber was raised to 55°C and maintained at that temperature until the thermocouples indicated temperature stabilization. Relative humidity was maintained at 15% or less. Standard Tests, as described in Paragraphs 3.1.2 and 3.1.3, were then performed at 55°C.

Chamber temperature was then decreased to -40°C and maintained at that temperature until the thermocouples indicated temperature stabilization. Standard Tests, as described in Paragraphs 3.1.2 and 3.1.3, were then performed at -40°C, except that the output voltages were recorded at one-minute intervals for thirty (30) minutes and at three-minute intervals thereafter for a total of ninety (90) minutes of operation.

FACTUAL DATA

METHOD OF TESTS (continued)

3.3 Altitude Test:

The test chamber was then evacuated to simulate an altitude of 3300 feet. After stabilization, Standard Tests, as described in Paragraphs 3.1.2 and 3.1.3, were performed at -40°C and 3300 feet, except that the output voltages were recorded at one-minute intervals for thirty (30) minutes and at three-minute intervals thereafter for a total of ninety (90) minutes of operation.

The chamber temperature was then increased to 25°C and after stabilization Standard Tests, as described in Paragraphs 3.1.2 and 3.1.3 were performed at 25°C and 3300 feet.

The chamber temperature was then increased to 55°C and after stabilization Standard Tests, as described in Paragraphs 3.1.2 and 3.1.3 were performed at 55°C and 3300 feet.

The test chamber was then returned to room ambient conditions and the specimen was examined for evidence of physical damage.

FACTUAL DATA

METHOD OF TESTS (continued)

3.4 Humidity Test:

The specimen was then subjected to three (3) complete cycles of the following conditions:

a) Chamber temperature raised from between 20°C and 38°C to 55°C within two (2) hours.

b) Chamber temperature maintained at 55°C for a period of six (6) hours.

c) Chamber temperature decreased from 55°C to a value between 20°C and 38°C within sixteen (16) hours.

Relative humidity was maintained at 95% throughout the test.

At the conclusion of the test, Standard Tests, as described in Paragraphs 3.1.2 and 3.1.3, were performed.

The chamber was then returned to room ambient conditions and the specimen was examined for evidence of physical damage.

4.0 TEST RESULTS:

The following data was noted and recorded during the above detailed test procedure:

For Thermocouple locations, see Drawing No. J-6145303W31.

Thermocouple No.	Location
1	On adjusting screw of Voltage Regulator No. 7A
2	Tied to wires between two Heat Sinks No. 15
3	Tied to knob of Switch No. 18
4	Tied to cable leading to Relay No. 5
5	Tied to support of H.V. Terminals No. 8
6	Tied to circuit breaker CB1
7	On outside Cabinet skin, right upper rear

4.1 Initial Standard Tests:

4.1.1 Thermocouple Readings Before Energizing the Specimen:

Thermocouple No.	°C
1	21
2	21
3	21
4	21
5	21
6	21
7	21

4.1.2 Initial B5 Brightness Output Voltages:

Time (minutes)	X_1-X_n (volts)	X_2-X_n (volts)
0	240	240
1	239	240
2	239	240
3	239	241
4	239	241
5	239	241
6	239	241
7	239	241
8	239	241
9	239	241
10	239	241
11	239	241
12	239	241
13	240	242
14	240	242
15	240	242

TEST RESULTS:

Initial Standard Tests (continued)

4.1.3 Initial Operation Check:

Remote Control Panel Switch Position	X_1-X_n (volts)	X_2-X_n (volts)
B4	149	150
B3	120	121
B2	70	70
B1	50	50

4.2 Temperature Test:

4.2.1 Thermocouple Readings at 55°C Chamber Temperature:

Elapsed Time (hours)	Temperature in °C Thermocouple Numbers 1	2	3	4	5	6	7
1.00	33.0	36.0	38.0	36.0	46.0	45.0	40.5
2.00	39.0	43.0	46.0	44.5	50.0	49.5	45.0
3.00	44.0	47.0	48.5	47.5	51.0	50.5	48.0
4.00	48.0	49.0	50.0	50.0	52.0	52.0	50.0
5.00	49.5	50.5	51.5	51.0	52.5	52.5	51.0
6.00	51.0	51.0	52.0	51.0	53.0	53.0	52.0
7.00	52.0	52.0	52.0	52.0	53.0	53.0	52.0
8.00	52.0	52.0	52.0	52.0	52.5	52.5	52.0
8.25	52.5	52.5	52.5	53.0	54.0	54.0	53.0
8.50	53.0	53.0	53.0	53.0	54.0	54.0	54.0
8.75	53.0	53.0	53.0	53.0	54.0	54.0	54.0
9.00	53.0	53.0	53.0	53.0	54.0	54.0	54.0
9.25	53.0	53.0	53.0	53.0	54.0	54.0	54.0
9.33	53.0	53.0	53.0	53.0	54.0	54.0	54.0

TEST RESULTS:

Temperature Test (continued)

4.2.2 B5 Brightness Output Voltages at 55°C:

Time (minutes)	X_1-X_n (volts)	X_2-X_n (volts)
0	240	241
1	240	241
2	240	241
3	240	241
4	240	241
5	240	241
6	240	241
7	240	241
8	240	241
9	240	241
10	240	241
11	240	241
12	240	241
13	240	241
14	240	241
15	240	241

4.2.3 Operation Check at 55°C:

Remote Control Panel Switch Position	X_1-X_n (volts)	X_2-X_n (volts)
B4	149.5	150.5
B3	120.0	120.5
B2	70.0	70.0
B1	50.0	50.0

TEST RESULTS:

Temperature Test (continued)

4.2.4 Thermocouple Readings at -40°C Chamber Temperature:

Elapsed Time (hours)	Temperature in °C Thermocouple Numbers 1	2	3	4	5	6	7
8	-36.0	-37.0	-36.0	-36.0	-39.0	-39.0	-33.5
9	-36.5	-37.5	-36.5	-36.5	-39.0	-39.0	-34.5
* 10	-37.0	-38.0	-37.0	-37.0	-39.0	-39.0	-35.0
11	-36.5	-37.0	-36.0	-37.0	-39.0	-39.0	-36.0
12	-37.5	-38.0	-37.0	-37.0	-39.0	-39.0	-36.5
13	-38.0	-38.0	-38.0	-38.0	-40.0	-39.0	-37.0
14	-38.0	-38.0	-38.0	-38.0	-40.0	-38.5	-37.0
22	-40.0	-40.0	-40.0	-40.0	-40.0	-40.0	-40.0

* At 10 hours elapsed time, the test chamber malfunctioned and the chamber temperature increased to -29°C for a period of five (5) minutes.

4.2.5 B5 Brightness Output Voltages at -40°C:

Elapsed Time (hours)	(minutes)	X_1-X_n (volts)	X_2-X_n (volts)
22	40	237	238
22	41	237	238
22	42	236	238
22	43	236	238
22	44	236	238
22	45	236	238
22	46	236	238
22	47	236	238
22	48	237	238
22	49	237	238
22	50	237	238
22	51	237	238
22	52	237	238
22	53	237	238
22	54	237	238
22	55	237	239
22	56	238	240
22	57	238	240
22	58	238	240
22	59	238	240

TEST RESULTS:

Temperature Test:

B5 Brightness Output Voltages at -40°C (continued)

Elapsed Time (hours)	(minutes)	X_1-X_n (volts)	X_2-X_n (volts)
23	0	238	240
23	1	238	240
23	2	238	240
23	3	238	240
23	4	239	241
23	5	238	240
23	6	239	240
23	7	239	241
23	8	239	241
23	9	239	241
23	10	239	241
23	13	239	240
23	16	239	241
23	19	239	241
23	22	239	241
23	25	239	241
23	28	239	241
23	31	239	241
23	34	239	241
23	37	239	241
23	40	239	241
23	43	239	241
23	46	239	241
23	49	239	240
23	52	239	240
23	55	239	240
23	58	239	240
24	1	239	241
24	3	239	241
24	7	239	241
24	10	239	241

TEST RESULTS:

Temperature Test (continued)

4.2.6 Operation Check at -40°C:

Remote Control Panel Switch Position	X_1-X_n (volts)	X_2-X_n (volts)
B4	148	150
B3	119	120
B2	69	69
B1	50	50

4.2.7 Thermocouple Readings at the End of Electrical Measurements:

Thermocouple No.	°C
1	+29
2	-25
3	-24
4	-19.5
5	-40
6	-38
7	-36

4.3 Altitude Test:

4.3.1 Thermocouple Readings:

Thermocouple readings taken after de-energizing the specimen and re-stabilizing at -40°C:

Elapsed Time (hours)	Temperature in °C Thermocouple Numbers 1	2	3	4	5	6	7
5.25	-39.0	-39.0	-38.0	-39.0	-40.0	-40.0	-38.0
5.75	-39.0	-40.0	-39.0	-39.0	-40.0	-40.0	-38.0
6.25	-39.0	-40.0	-39.0	-39.0	-40.0	-40.0	-38.0
6.75	-39.0	-40.0	-39.0	-39.0	-40.0	-40.0	-38.5
7.25	-39.0	-40.0	-39.0	-39.0	-40.0	-40.0	-38.5
8.25	-39.0	-40.0	-39.0	-39.0	-40.0	-40.0	-38.5
9.25	-39.0	-40.0	-39.0	-39.0	-40.0	-40.0	-38.5

TEST RESULTS:

Altitude Test (continued)

4.3.2 B5 Brightness Output Voltages at -40°C and 3300 feet:

Time (minutes)	X_1-X_n (volts)	X_2-X_n (volts)
0	236	238
1	236	238
2	236	238
3	236	238
4	236	238
5	236	238
6	236	238
7	236	238
8	236	238
9	237	238
10	237	238
11	237	238
12	237	238
13	237	238
14	237	238
15	237	238
16	237	239
17	237	239
18	237	240
19	238	240
20	238	240
21	238	240
* 22	-	240

* After twenty-two (22) minutes, test was discontinued due to the blowing of a fuse on the external test equipment. The fuse was replaced and the test was repeated on the following day.

4.3.3 Thermocouple Readings after Re-stabilizing at -40°C and 3300 feet:

Thermocouple No.	°C
1	-40.0
2	-40.0
3	-40.0
4	-40.0
5	-40.0
6	-40.0
7	-40.0

TEST RESULTS:

Altitude Test (continued)

4.3.4 B5 Brightness Output Voltages at -40°C and 3300 feet (repeated):

Time (minutes)	X_1-X_n (volts)	X_2-X_n (volts)
1	238.0	239.0
2	239.0	239.0
3	238.0	239.0
4	238.0	239.0
5	238.0	239.0
6	238.0	239.0
7	238.0	239.0
8	238.0	239.0
9	238.0	239.0
10	238.0	239.0
11	238.0	239.0
12	239.0	240.0
13	239.0	240.0
14	239.0	240.0
15	239.0	240.0
16	239.0	240.0
17	239.0	240.0
18	239.0	240.0
19	239.0	240.0
20	239.0	240.0
21	239.0	240.0
22	239.0	240.0
23	239.0	240.0
24	239.0	240.0
25	239.0	240.0
26	239.0	240.0
27	239.5	240.5
28	239.5	240.5
29	239.5	240.5
30	239.5	240.5
33	239.5	240.5
36	239.5	241.0
39	239.5	241.0
42	239.0	240.0
45	239.0	240.0
48	239.5	240.5
51	240.0	241.0
54	240.0	240.5

TEST RESULTS:

Altitude Test:

B5 Brightness Output Voltages at -40°C and 3300 feet (repeated) (continued)

Time (minutes)	X_1-X_n (volts)	X_2-X_n (volts)
57	239.5	241.0
60	239.5	241.1
63	239.0	241.0
66	239.0	241.0
69	239.0	240.0
72	239.0	240.0
75	239.0	240.5
78	239.0	240.5
81	239.0	241.0
84	239.0	241.0
87	239.0	240.5
90	239.0	240.0

4.3.5 Operation Check at -40°C and 3300 feet:

Remote Control Panel Switch Position	X_1-X_n (volts)	X_2-X_n (volts)
B4	150	148
B3	120	119
B2	70	70
B1	50	50

4.3.6 Thermocouple Readings After Stabilization at +25°C and 3300 feet:

Thermocouple No.	°C
1	25.0
2	25.0
3	25.0
4	25.0
5	24.5
6	25.0
7	25.0

TEST RESULTS:

Altitude Test (continued)

4.3.7 B5 Brightness Output Voltages at +25°C and 3300 feet:

Input Voltage: 109 x 20 = 2180 volts

Time (minutes)	X_1-X_n (volts)	X_1-X_n (volts)
0	239.5	240.0
1	239.5	240.0
2	239.5	240.0
3	239.5	240.0
4	239.5	240.0
5	239.5	240.0
6	239.5	240.0
7	239.5	240.0
8	239.5	240.0
9	239.5	240.0
10	240.0	240.0
11	240.0	240.0
12	240.0	240.0
13	240.0	240.0
14	240.0	240.0
15	240.0	240.0

4.3.8 Operation Check at +25°C and 3300 feet:

Remote Control Panel Switch Position	X_1-X_n (volts)	X_2-X_n (volts)
B4	150.0	150.0
B3	119.0	119.5
B2	70.0	70.0
B1	50.0	50.0

FACTUAL DATA

TEST RESULTS:

Altitude Test (continued)

4.3.9 Thermocouple Readings After Stabilization at +55°C and 3300 feet:

Thermocouple No.	°C
1	54.0
2	54.0
3	54.0
4	54.0
5	54.5
6	54.5
7	54.5

4.3.10 B5 Brightness Output Voltages at +55°C and 3300 feet:

Time (minutes)	X_1-X_n (volts)	X_2-X_n (volts)
0	240	241
1	240	241
2	240	241
3	240	241
4	240	241
5	240	241
6	240	241
7	239	241
8	239	241
9	239	241
10	239	241
11	239	241
12	240	241
13	240	241
14	240	241
15	240	241

4.3.11 Operation Check at +55°C and 3300 feet:

Remote Control Panel Switch Position	X_1-X_n (volts)	X_2-X_n (volts)
B4	149	150
B3	119	120
B2	70	70
B1	50	50

TEST RESULTS (continued)

4.4 Humidity Test:

Test started at 1415 on 24 October 1972.

4.4.1 B5 Brightness Output Voltages - 1400 on 27 October 1972:

Input Voltage: 109 x 20 = 2180 volts.

Time (minutes)	X_1-X_n (volts)	X_2-X_n (volts)
0	240	240
1	240	240
2	240	240
3	240	240
4	240	240
5	240	240
6	240	240
7	240	240
8	240	240
9	240	240
10	240	240
11	240	240
12	240	240
13	240	240
14	240	240
15	240	240

4.4.2 Operation Check at the End of Humidity Test:

Remote Control Panel Switch Position	X_1-X_n (volts)	X_2-X_n (volts)
B4	149	150
B3	119	119
B2	69	69
B1	50	50

TEST RESULTS:

Humidity Test (continued)

4.4.3 Post Humidity Test Examination:

Visual examination after the humidity test revealed the following:

a) Red deposits noted on Transformers No. T6934216A and No. 2626300 in the right compartment.

b) White deposits noted on four (4) door bolts and on thirty-five (35) unpainted nuts and bolts in the front compartment.

c) Rust noted on four (4) circuit breaker mounting bolts and nuts.

No further physical damage noted as a result of this test.

5.0 POST TEST EXAMINATION:

Post test examination revealed no evidence of any additional damage as a result of the stress of these tests.

6.0 RECOMMENDATIONS:

None, data merely submitted.

7.0 CONCLUSIONS:

Final evaluation of the submitted specimen for conformance to the requirements of the detailed specifications will be accomplished by Hevi-Duty Electric upon review of results reported herein and further examination as required.

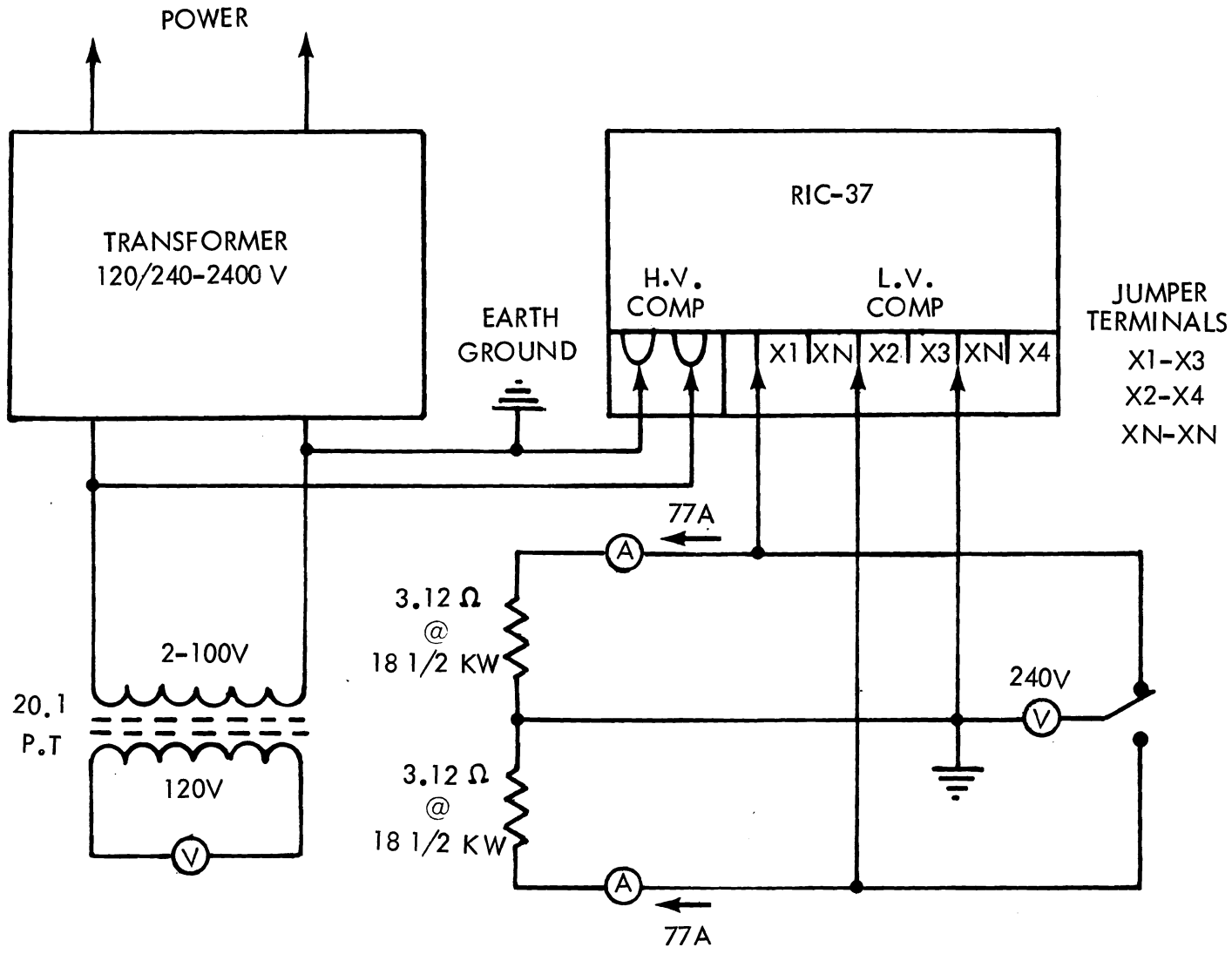

Figure 1
Connection Diagram of RIC-37

ETL 4837
S.O. 710-208

35962