Catalogued

Report No. FAA-RD-74-67

FAA WJH Technical Center
00090129

OCT 1 '74
RECEIVED

DEVELOPMENT OF EDGE LIGHTS

S. Poulsen
SEPCO Division
Connecticut International Corporation
Windsor Locks, Conn. 06096

FEBRUARY 1974

FINAL REPORT

Document is available to the public through the National Technical Information Service, Springfield, Virginia 22151.

Prepared for

U.S. DEPARTMENT OF TRANSPORTATION
FEDERAL AVIATION ADMINISTRATION
Systems Research & Development Service
Washington D.C. 20590

NOTICE

This document is disseminated under the sponsorship of the Department of Transportation in the interest of information exchange. The United States Government assumes no liability for its contents or use thereof.

Connecticut International Corporation, SEPCO Division
Development of Edge Lights for Airport Runways and Taxiways, by Stanley N. Poulsen. Final report. Windsor Locks, Conn., February 1974.

77 p. (RD-74-67)
Contract No. FA72WA-2726
Project No. 430-209-07

1. Marker Lights. 2. Runway lights.
3. Landing Aids. 4. Taxiway Lights.

Connecticut International Corporation, SEPCO Division
Development of Edge Lights for Airport Runways and Taxiways, by Stanley N. Poulsen. Final report. Windsor Locks, Conn., February 1974.

77 p. (RD-74-67)
Contract No. FA72WA-2726
Project No. 430-209-07

1. Marker Lights. 2. Runway lights.
3. Landing Aids. 4. Taxiway Lights.

Technical Report Documentation Page

1. Report No. FAA-RD-74-67	2. Government Accession No.	3. Recipient's Catalog No.
4. Title and Subtitle Development of Edge Lights for Airport Runways and Taxiways		5. Report Date February 1974
		6. Performing Organization Code
7. Author(s) Stanley N. Poulsen		8. Performing Organization Report No. 7309
9. Performing Organization Name and Address SEPCO DIVISION Connecticut International Corporation Windsor Locks, Connecticut 06096		10. Work Unit No. (TRAIS) 45341
		11. Contract or Grant No. DOT-FA72WA-2726
12. Sponsoring Agency Name and Address Department of Transportation Federal Aviation Administration Systems Research and Development Service Washington, D. C. 20590		13. Type of Report and Period Covered Final - October 1971 to June 1973
		14. Sponsoring Agency Code 430-209-07N
15. Supplementary Notes		

16. Abstract

A design and development program was conducted to produce lower cost elevated edge lights with improved performance for use as visual aids on airport runways and taxiways. High intensity semi-flush runway edge light assemblies with light output in the main beams equal to the high intensity elevated edge light output were also produced.

The light assemblies will withstand temperature extremes from -55°C to +55°C, jet blasts up to and including 350 mph, high humidity as well as other severe environmental conditions.

17. Key Words Landing Aids, Marker Lights, Runways, Taxiways		18. Distribution Statement Document is available to the public through the National Technical Information Service, Springfield, Virginia 22151.	
19. Security Classif. (of this report) Unclassified	20. Security Classif. (of this page) Unclassified	21. No. of Pages 77	22. Price

Form DOT F 1700.7 (8-72) Reproduction of completed page authorized

PREFACE

The work reported was completed by the Engineering Department of Connecticut International Corporation.

Present runway and taxiway elevated edte light assemblies have proven inadequate for many jet operations. Larger jets can cause severe damage. Present high intensity semi-flush runway edge light assemblies are inadequate for in-pavement installation at runway intersections where elevated lights cannot be installed. Also, the elevated high intensity and medium intensity light assemblies used today have no interchangeability between major component parts. Such interchangeability would reduce system costs and facilitate maintenennce.

A design and development program was conducted to produce the following edge lights:

Class I	-	High-Intensity Semiflush Runway Edge Light Assembly, 400 Watt
Class II	-	High-Intensity Elevated Runway Edge Light Assembly, 200 Watt
Class III	-	Medium-Intensity Elevated Runway Edge Light Assembly, 100 Watt
Class IV	-	Elevated Taxiway Edge Light Assembly, 45 Watt

TABLE OF CONTENTS

1.0	INTRODUCTION		5
	1.1	General	5
2.0	GENERAL DESCRIPTION AND DESIGN FEATURES		8
	2.1	Class I	8
		2.1.1 Application	8
		2.1.2 General	8
		2.1.3 Design	8
	2.2	Class II	11
		2.2.1 Application	11
		2.2.2 General	11
		2.2.3 Design	11
	2.3	Class III	16
		2.3.1 Application	16
		2.3.2 General	16
		2.3.3 Design	16
	2.4	Class IV	19
		2.4.1 Application	19
		2.4.2 General	19
		2.4.3 Design	19
	APPENDIX	SEPCO Report 7312 and YORK Test Report Y-1308	

LIST OF ILLUSTRATIONS

FIGURE 1	Class I Cross Sectional View	Section 2.1.3
FIGURE 2	Class I Optical Sub-Assembly	Section 2.1.3
FIGURE 3	Class I Installation	Section 2.1.3
FIGURE 4	Class II Cross Sectional View	Section 2.2.3
FIGURE 5	Class II Optical Sub-Assembly	Section 2.2.3
FIGURE 6	Class III Cross Sectional View	Section 2.3.3
FIGURE 7	Class III Optical Sub-Assembly	Section 2.3.3
FIGURE 8	Class IV Cross Sectional View	Section 2.4.3
FIGURE 9	Class IV Optical Sub-Assembly	Section 2.4.3
FIGURE 10	Class II, III, and IV Installation	Section 2.4.3
FIGURE 11	Photometric Light Orientation	Section 2.4.3
FIGURE 12	Class I, II, and III Intensity Distribution Curve, Main Beams 4-1/2° Vertical	Section 2.4.3
FIGURE 13	Class I, II, and III Intensity Distribution Curve, Vertical Scan Through Center of Beam	Section 2.4.3
FIGURE 14	Class IV Intensity Distribution Main Beam 4-1/2° Vertical	Section 2.4.3
FIGURE 15	Class IV Intensity Distribution Curve Vertical Scan Through Center of Beam	Section 2.4.3

1.0 INTRODUCTION

1.1 General

This report summarizes the work completed under FAA Contract Number DOT-FA72WA-2726 as follows:

a. Design, fabricate and test ten (10) each of the following Edge Light Assemblies:

   (1) Class I, High Intensity Semiflush Runway

   (2) Class II, High Intensity Elevated Runway

   (3) Class III, Medium Intensity Elevated Runway

   (4) Class IV, Elevated Taxiway

The work was started in October 1971 and completed in June 1973 with the final testing and delivery of Edge Light Assemblies.

2.0 GENERAL DESCRIPTION AND DESIGN FEATURES

2.1 CLASS I

2.1.1 Application

In-pavement edge lights are used where high speed and taxiway exits intersect the runway to complete the visual guidance effect of the elevated edge lights. Also, they are used in areas where two runways cross each other.

2.1.2 General

The light fixture is bidirectional which projects two beams of light 173° apart. Each beam of light is toed-in 3-1/2° towards the runway centerline. The light fixture consists of a weatherproof optical assembly and an outer ring. The optical assembly contains two 200 watt 6.6 ampere lamps, reflectors, lenses, filter receptacles, and electrical leads. The optical assembly is contained in two ductile iron castings which are screwed together and sealed with an O-ring. The weight of the complete unit is 73 pounds. See Figure 1 for cross sectional view of fixture.

2.1.3 Design

The design for the Class I inset light is straight-forward and relatively simple. The basic optical system is adapted from the FAA approved L-850B touchdown zone light.

The optical system contains two lamps, reflectors and prisms. The lamps are standard and have the following design features:

> 200 watts, 6.6 amps rated current. 500 hours average life, operated on a variable step constant current regulator, double contact ring base, and 4400 initial lumens, CC-6 filament construction, 1-1/16 light center length (L.C.L.), 2-3/8 Mean Overall Length (M.O.L.) and T-4 bulb.
>
> The G.E. order abbreviation is Q6.6A/T4DCR.

The reflectors are a section of a parabola which collects the light and directs it out through the prism. The reflector material is aluminum with ALZAK reflector finish. The focal length is 13/16".

The prisms are identical to the FAA approved in-pavement approach light. The material is heat resistant glass per MIL-C-7989, class C. Prisms are tempered to withstand the following thermal shock test without cracking:

> Oven heat at 150°C for one hour, then immerse in water that is at a temperature of 5°C or less.

Filters may be installed if desired. Red, yellow, green and blue filters are available. Filters are glass which conforms to MIL-C-7989, class B and MIL-C-25050 type I, grade B.

The castings were specifically designed for roll-over and impact loads normally expected at taxiway and runway intersections. The casting material is pearlite ductile iron with 60,000 PSI minimum yield point, and hardness is brinell 180 minimum. All castings are cadmium plated per QQ-P-416 class I, type II. The exterior surfaces are painted orange enamel per TT-E-489 class B, color #12197 per FED-STD-595.

The material of the lamp and reflector bracket is aluminum. It is anodized per MIL-A-8625, type II, class I to resist corrosion.

All general purpose hardware used in the light fixture is 18-8 stainless steel.

The unit is designed in such a manner that it may be mounted on a FAA L-837 or L-857 type I transformer housing. This makes the mounting standard, thus being compatible with existing lighting systems.

This design uses the same lamp and reflector as the L-850B touchdown zone light which should help to keep the number of spare parts to a minimum.

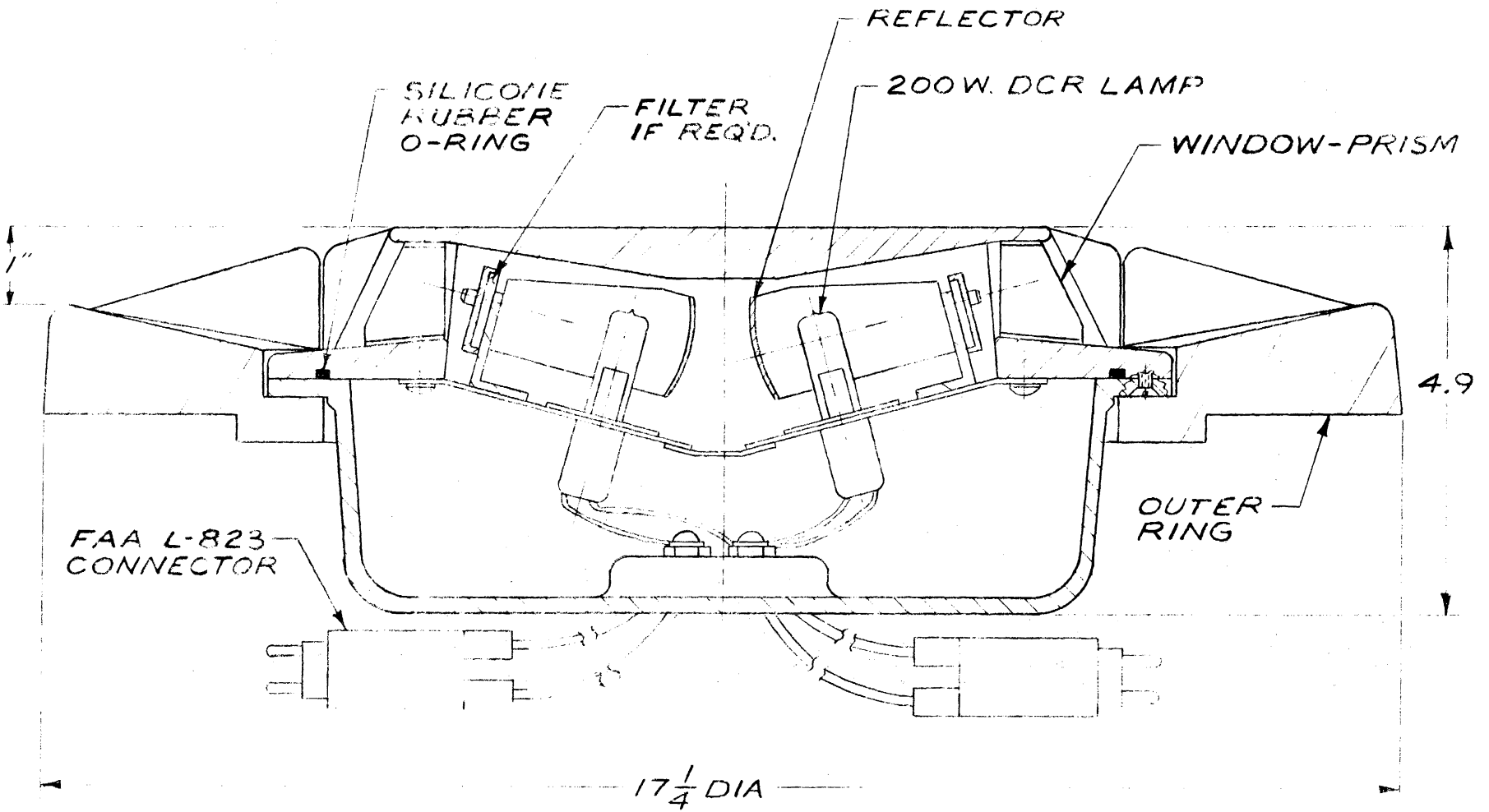

FIGURE 1
CLASS I CROSS SECTIONAL VIEW

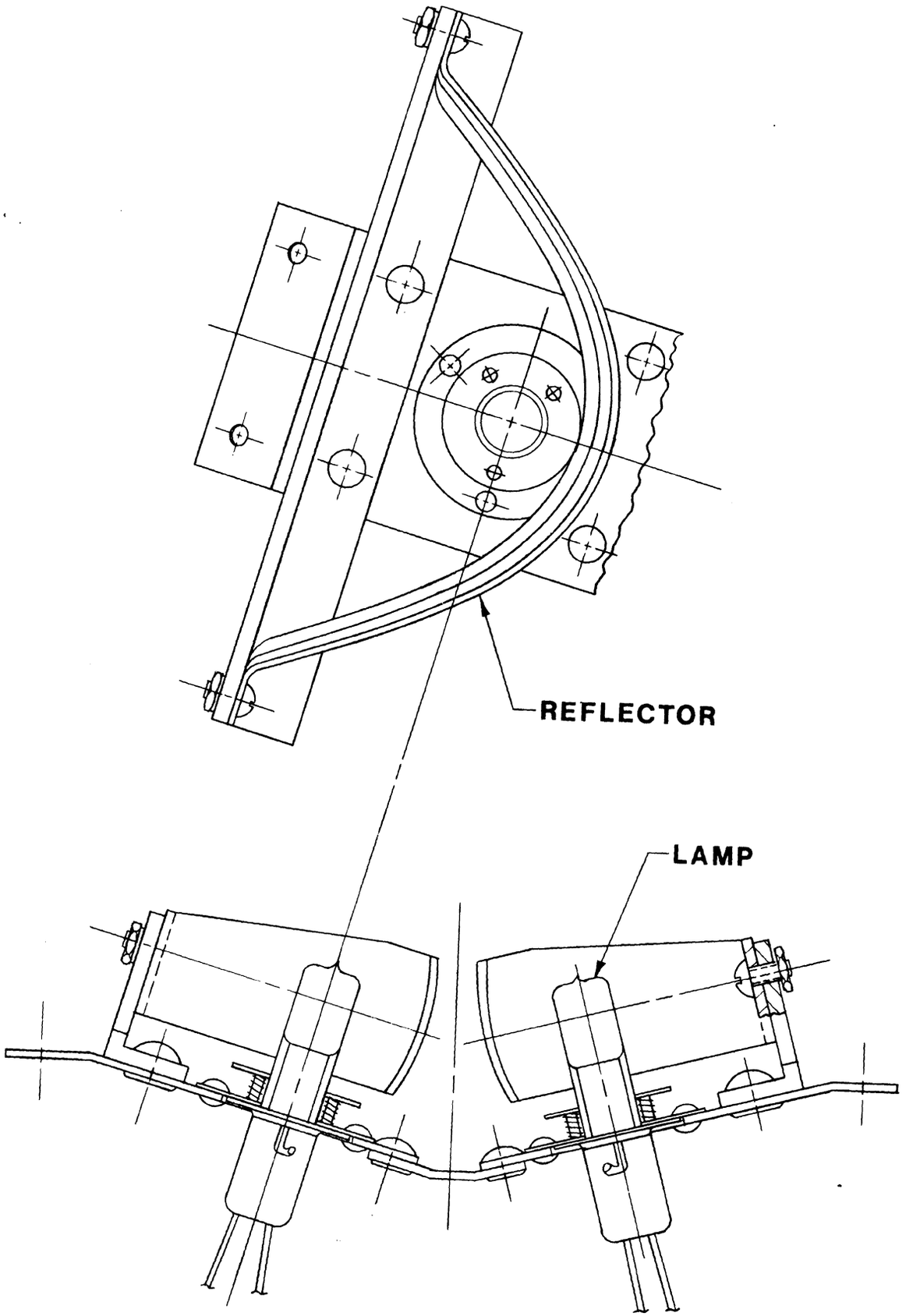

FIGURE 2
CLASS I OPTICAL SUB-ASSEMBLY

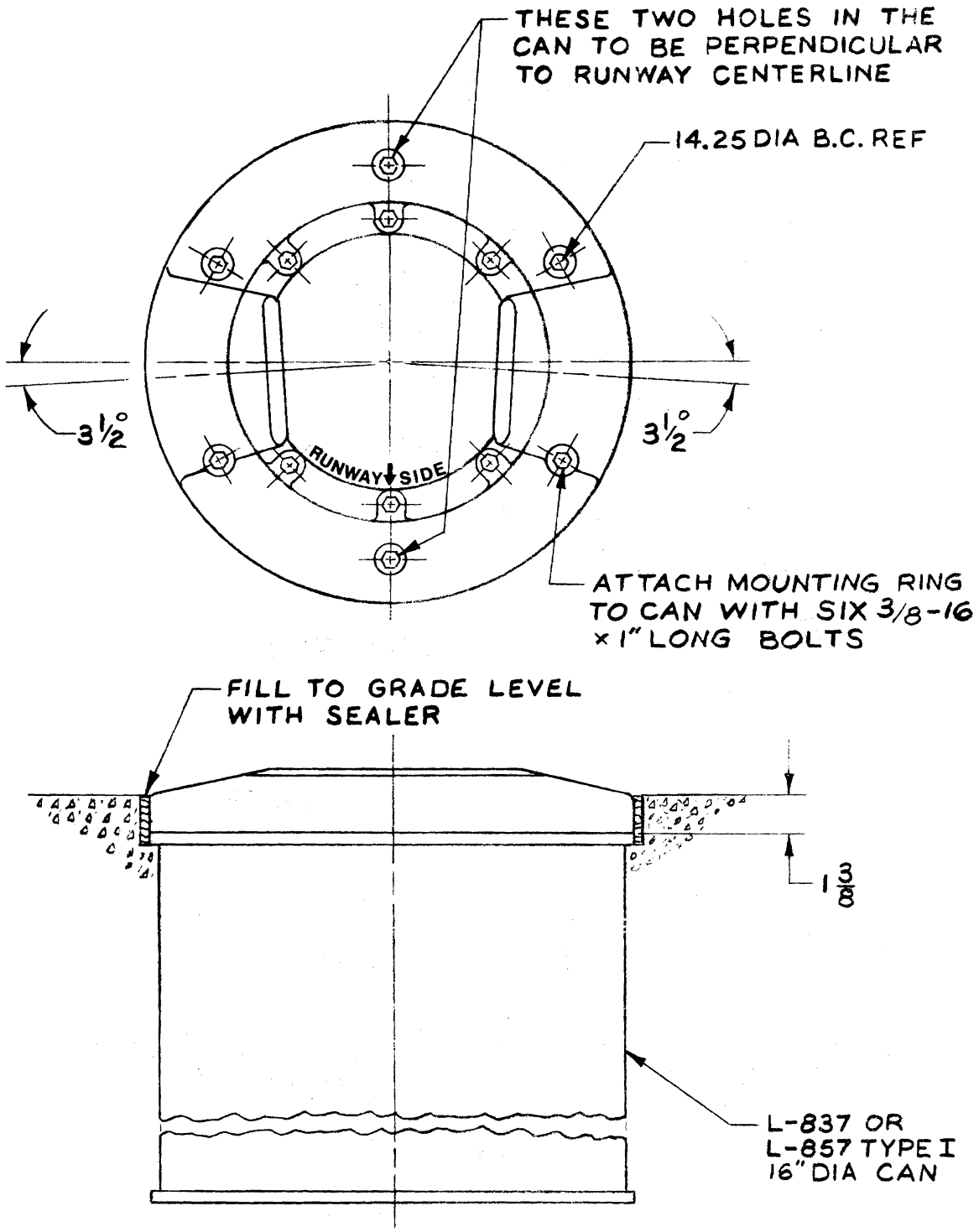

FIGURE 3

CLASS I INSTALLATION

2.2 Class II

2.2.1 Application

Elevated high intensity edge lights are used for edge marking of the main runways, specially those equipped with instrument landing systems, or low visibility approach lights.

2.2.2 General

The light fixture consists of a Military Standard frangible coupling which secures two aluminum castings serving as a ball joint; an optical bench secured to the ball joint by a 360° quick release band type clamp. The optical bench contains a 200 watt lamp, reflector, lenses, filters, and glass dome. The weight of the fixture is 3-3/4 pounds. See Figure 3 for cross sectional view of fixture.

2.2.3 Design

The base of this fixture is a MS17814-1 frangible coupling, which is standard for 2 inch EMT. This allows the fixture to be raised in snow regions by the insertion of a 2 inch EMT and a coupling. The fixture may be mounted on a FAA standard base plate or stake. Figure 10 shows fixture installed. The main body of the fixture is two castings held together with three lock screws. The castings serve as a ball joint. The castings are aluminum alloy per QQ-A-601 alloy 43.

The optical design consists of a lamp, reflector, lenses, glass dome and filters (if required). The lamp is also used in the Class I inset light and the FAA approved L-850B touchdown light. The lamp has the following design features:

> 200 watts, 6.6 amps rated current, 500 hours average life, operates on a variable step constant current regulator, double contact ring base, and 4400 initial lumens, CC-6 filament construction, 1-1/16 light center length (L.C.L.), 2-3/8 mean overall length (M.O.L.), and T-4 bulb.
>
> The G.E. order abbreviation is Q6.6A/T4DCR.

The reflector is aluminum with ALZAK reflector finish, which has long life without deterioration, In addition to serving in the optical system, it is used as a shield. The runway side is shielded from stray light. This shielding limits the light emitted toward the runway to 100 candela maximum between horizontal angles of 30° through 330° and 0° through 15° vertical. The focal length is 1-5/32".

The lenses are type I aviation white per MIL-C-25050 and class B heat resistant per MIL-C-7989. The dome is type I aviation white per MIL-C-25050 and class B heat resistant per MIL-C-7989. The glass is tempered for thermal shock resistance. All optical surfaces are on the inside of the glass dome, leaving the outside surfaces smooth and easy to clean. The glass will withstand jet blasts up to and including 350 miles per hour.

Filters may be inserted into the fixture to produce a light output of aviation red or green in the main beams. Filters are class B heat resistant per MIL-C-7989 and the color is per MIL-C-25050 type I.

The optics, except the glass dome, are rigidly attached to an anodized aluminum mounting base. This makes up an optical sub-assembly as shown in figure 5.

The optical sub-assembly and glass dome are held to the housing by a quick release clamp. The clamp is a band type with a trunk latch. The clamp is 6061-0 aluminum heat treated to T6 condition and is anodized per MIL-A-8625 type II, class I.

A silicone rubber gasket per ZZ-R-765, class IIb, grade 50 is used between the glass dome and aluminum housing. This eliminates glass to metal contact and also seals the fixture.

The castings serve as a ball joint which make it easy to level and align the fixture. The design for alignment is such to allow for 5 degrees vertical misalignment and 360 degrees horizontal misalignment after

installation. An alignment and leveling fixture is supplied which has two sights and a level. The glass dome must be removed and the optical section suspended over the side of the fixture. The alignment and leveling fixture is then attached to top of the housing. Alignment is done by rotating the unit until the sights are parallel with the runway centerline. To level the unit lightly tap around fixture where applicable reading the level. With the unit perfectly level and aligned all hardware is tightened.

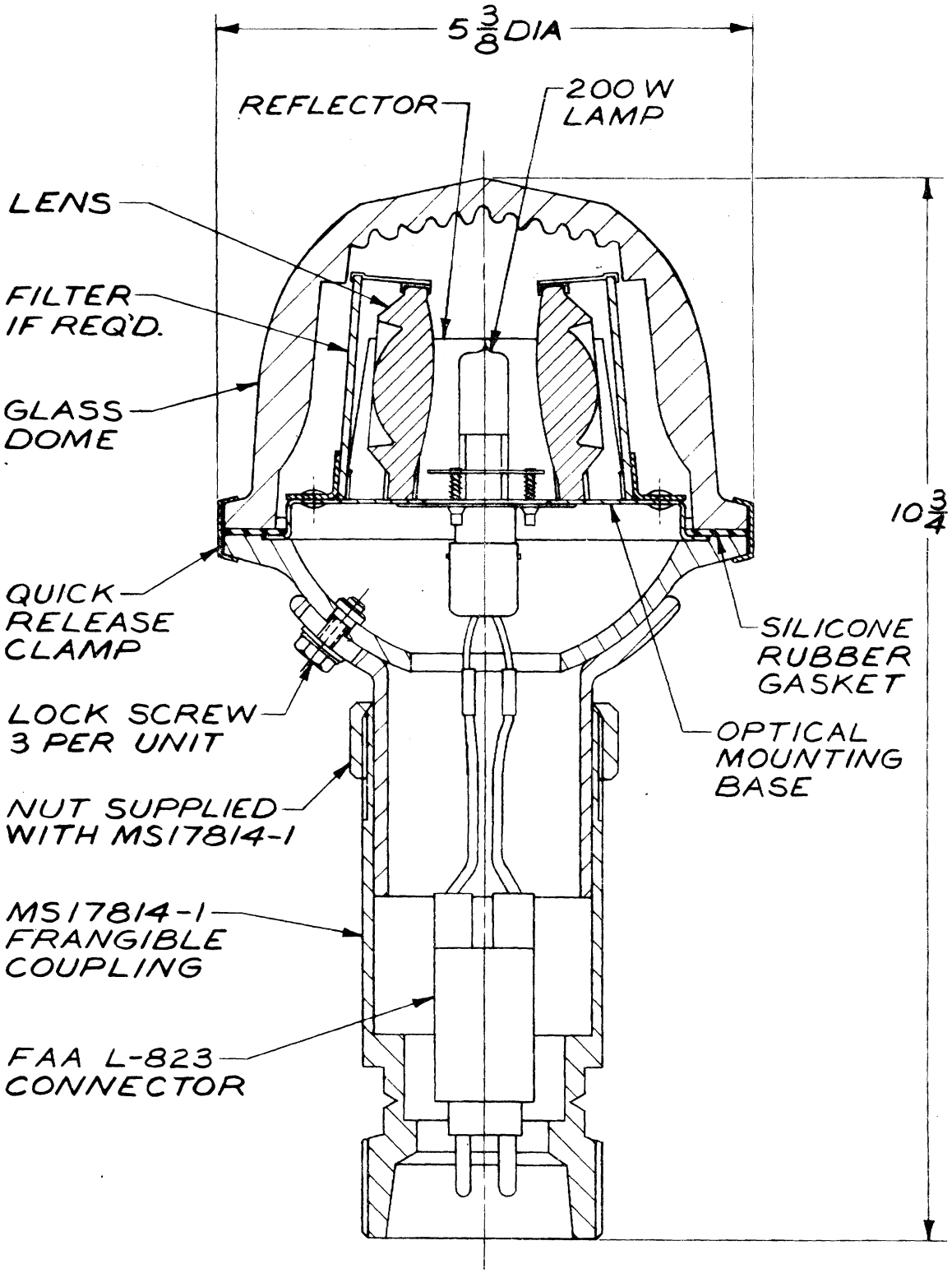

FIGURE 4

CLASS II CROSS SECTIONAL VIEW

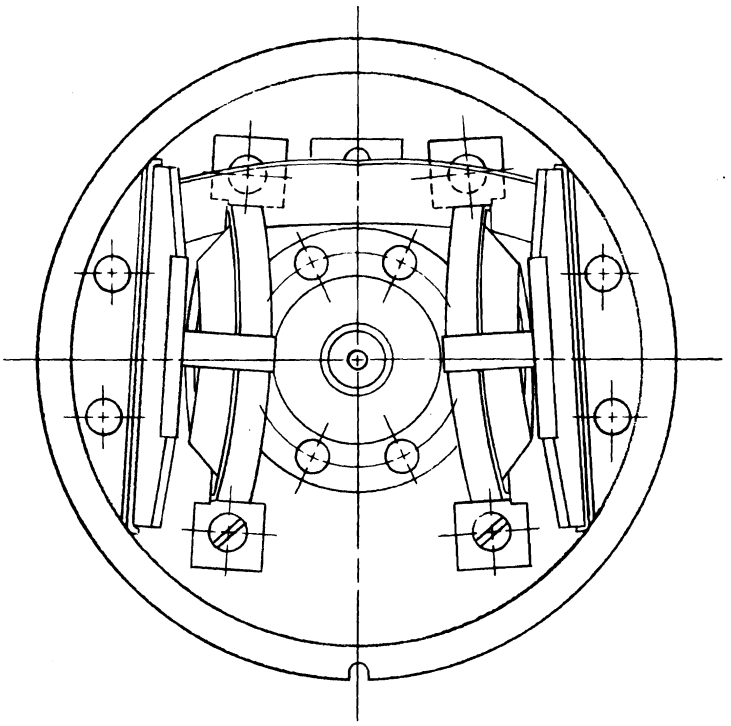

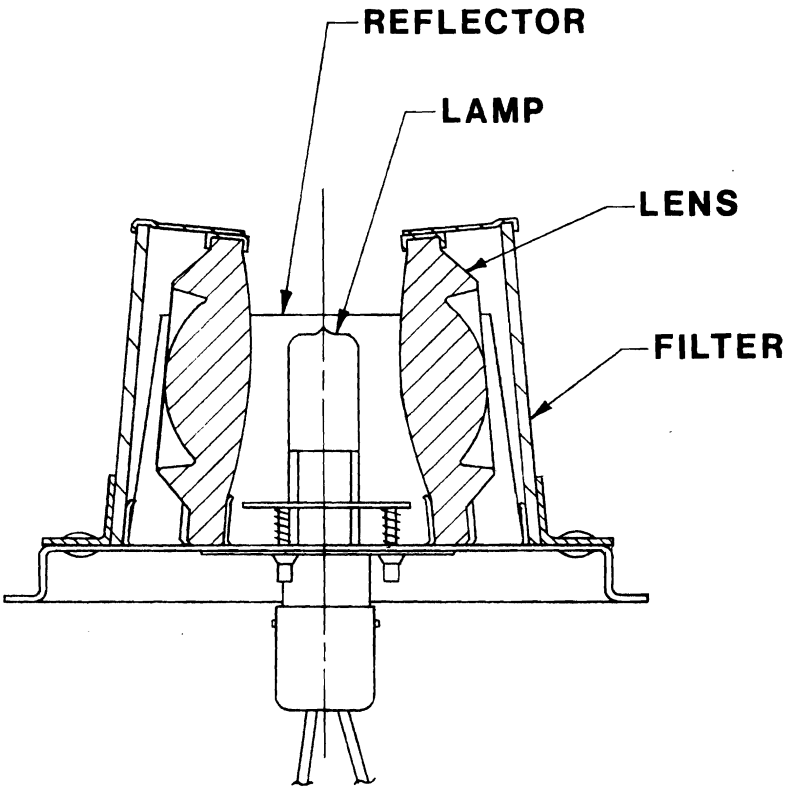

FIGURE 5
CLASS II OPTICAL SUB-ASSEMBLY

2.3 Class III

2.3.1 Application

Elevated medium intensity edge lights are used for edge marking of runways at all airports except where high intensity may be required.

2.3.2 General

The medium intensity edge light is identical to the Class II light except for a 100 watt lamp and mounting of lamp. The weight of the fixture is 3-3/4 pounds. See Figure 4 for cross sectional view of fixture.

2.3.3 Design

The design is identical to the Class II high intensity elevated edge light in everyway except for the lamp, lamp socket and optical mounting base. See paragraph 2.2.3 for design information.

The lamp in this fixture has the following features:

> 100 watts +/- 5%, 500 hours average life, 6.6 amps rated current, operates on a variable step constant current regulator, 2900°K +/- 50°K color temperature, 1620 lumens, a two pin prefocused base, C-6 filament construction, 1.54 light center length (L.C.L.), 2-23/64 mean overall length (M.O.L.), and T-4 bulb.
>
> The G.E. order abbreviation is Q100T4/CL.

The optical mounting base is the same as Class II except for the lamp socket mounting location. Due to the difference in lamps in Class II and Class III, the same lamp socket is not used.

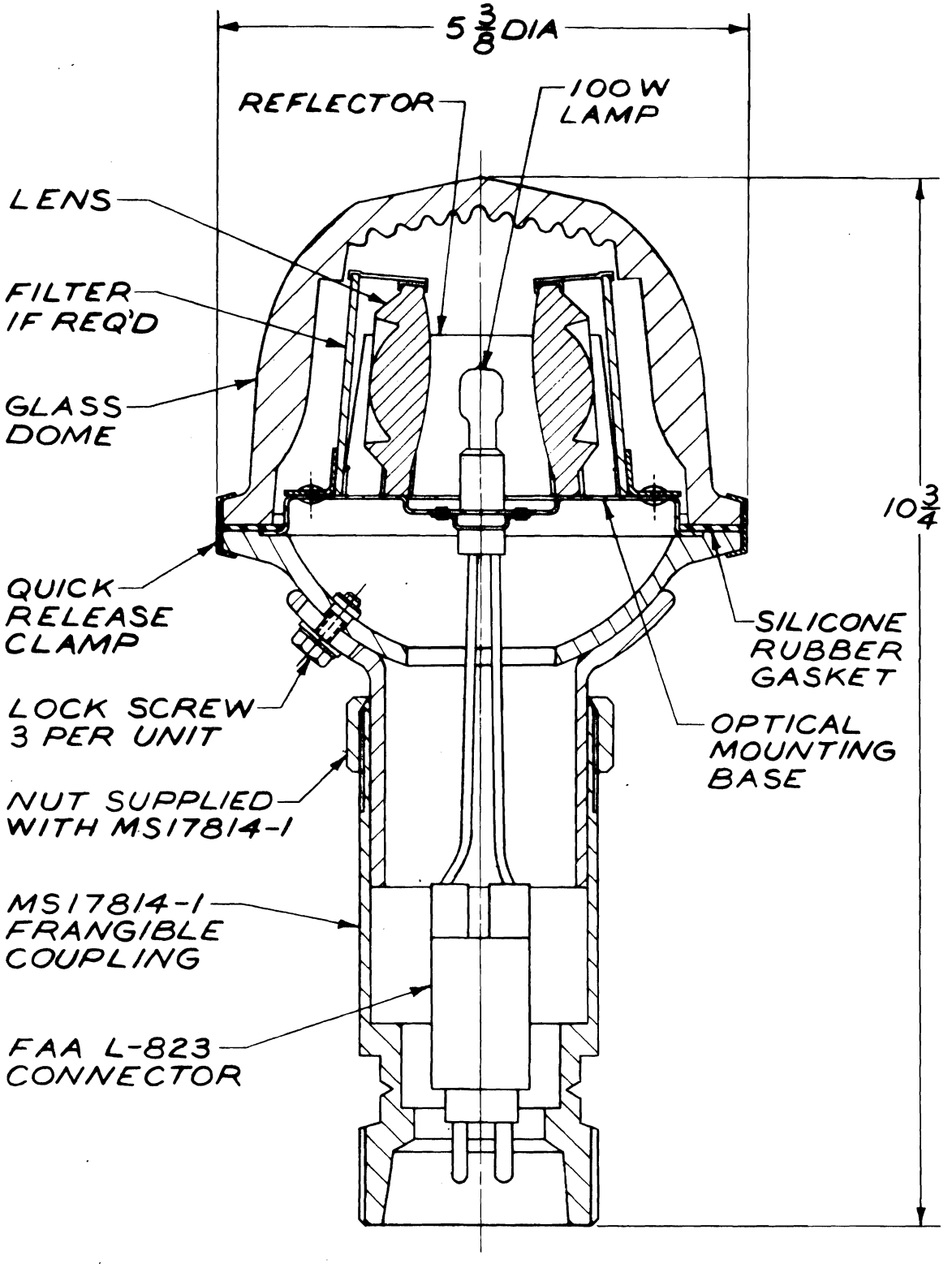

FIGURE 6

CLASS III CROSS SECTIONAL VIEW

FAA WJH Technical Center
00090129

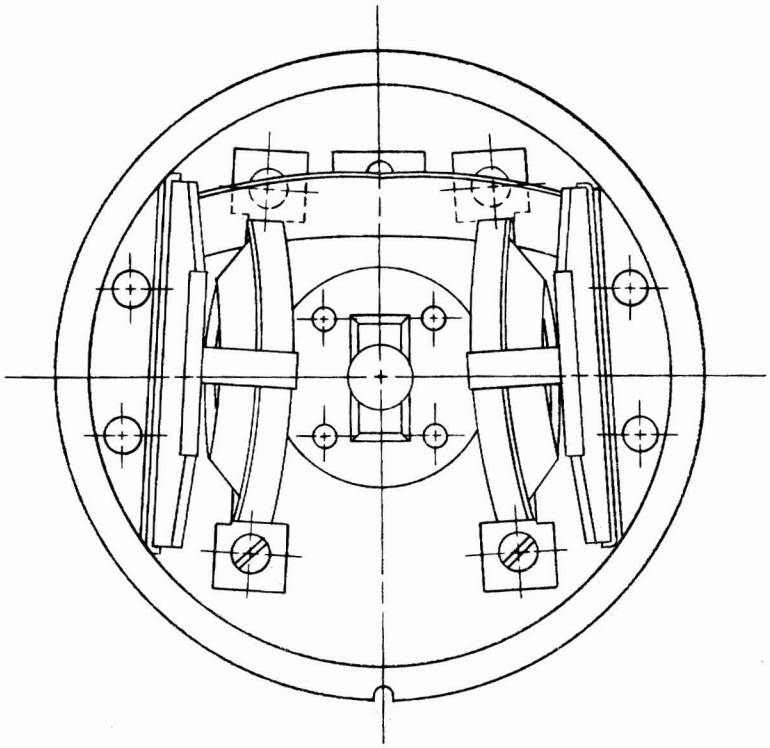

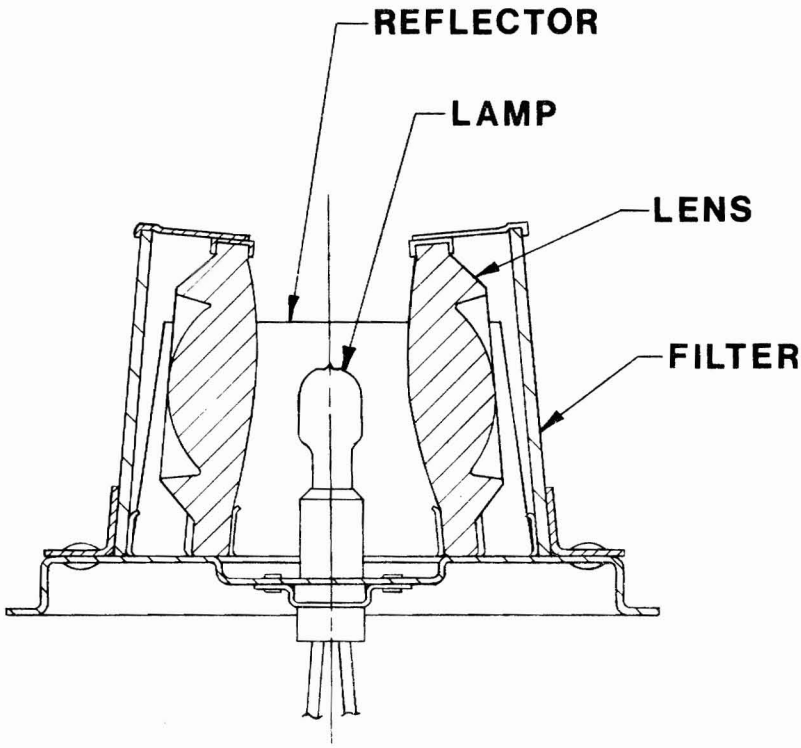

FIGURE 7
CLASS III OPTICAL SUB-ASSEMBLY

2.4 Class IV

2.4.1 Application

Taxiway edge lights are used for edge marking of taxiways.

2.4.2 General

The light fixture consists of a Military Standard frangible coupling which secures an optical bench containing a lamp, reflectors, blue dome and electrical connections. The weight of the fixture is 1-1/4 pounds. See Figure 5 for cross sectional view of fixture.

2.4.3 Design

The inside of this fixture has a lamp and two reflectors rigidly mounted on an anodized aluminum plate as shown in Figure 9. The lamp has the following design features:

> 45 watts, 6.6 amps rated current, 500 hours average life, operates on a variable step constant current regulator, 3050°K +/- 50°K color temperature, 740 lumens, 500°F minimum bulb wall temperature, single ended lamp with two pin prefocus base, C-6 filament construction, 1.54 light center length (L.C.L.), 2-23/64 mean overall length (M.O.L.) T-2-1/2 bulb, and is the same physical size as the Class III lamp.

The reflectors are aluminum with ALZAK reflector finish, which has long life without deterioration. In addition to serving in the optical system, the larger reflector is used as a shield. The side opposite the taxiway is shielded from stray light. This shielding helps eliminate a condition commonly known as "the sea of blue." The focal length is 3/4".

The exterior of this fixture is a MS17814-1 frangible coupling and a glass dome. The frangible coupling is the same as used in Class II and Class III lights. Therefore, the mounting capabilities are identical to Class II and III lights. See Para. 2.2.3 Figure 10 shows the fixture installed. The glass dome is type I aviation blue per MIL-C-25050 and class B heat resistance

per MIL-C-7989. The blue dome has been designed to be smooth, without fresnel lens contours. This smooth exterior makes the fixture easy to clean and less susceptible to photometric degradation due to jet engine exhaust fumes. The glass will withstand jet blasts up to and including 350 miles per hour. The MS17814-1 compression nut holds the glass dome, optical sub-assembly and frangible coupling in place. A silicone rubber gasket per ZZ-R-765, class IIb, grade 50 is used between the glass dome and optical mounting plate. This eliminates glass to metal contact and also seals the unit.

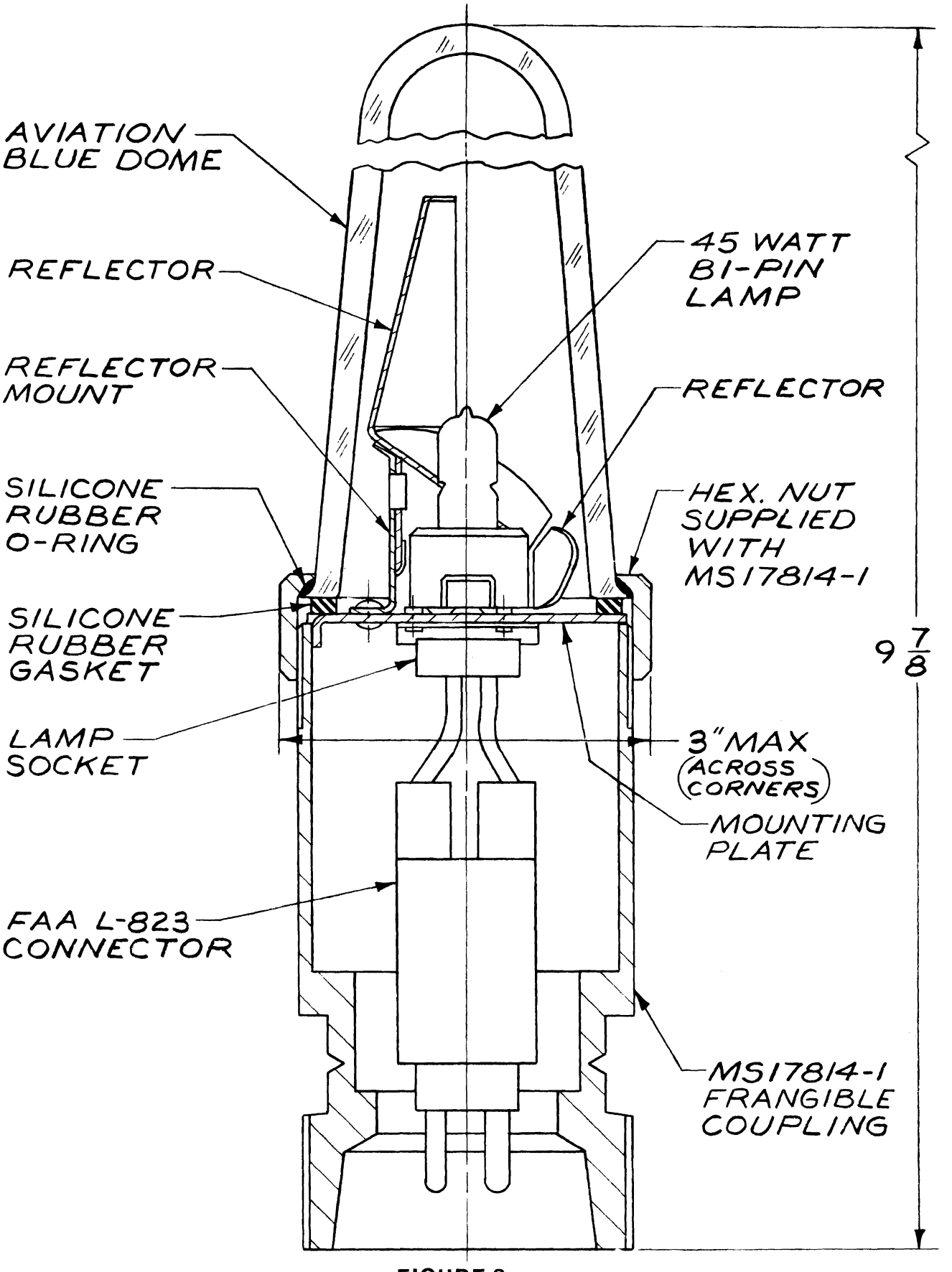

FIGURE 8
CLASS IV CROSS SECTIONAL VIEW

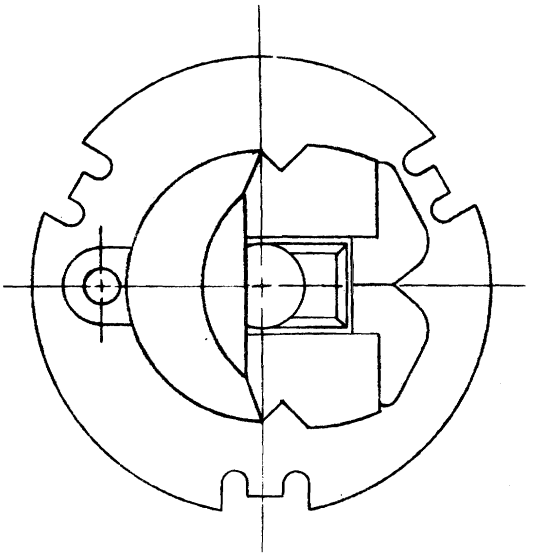

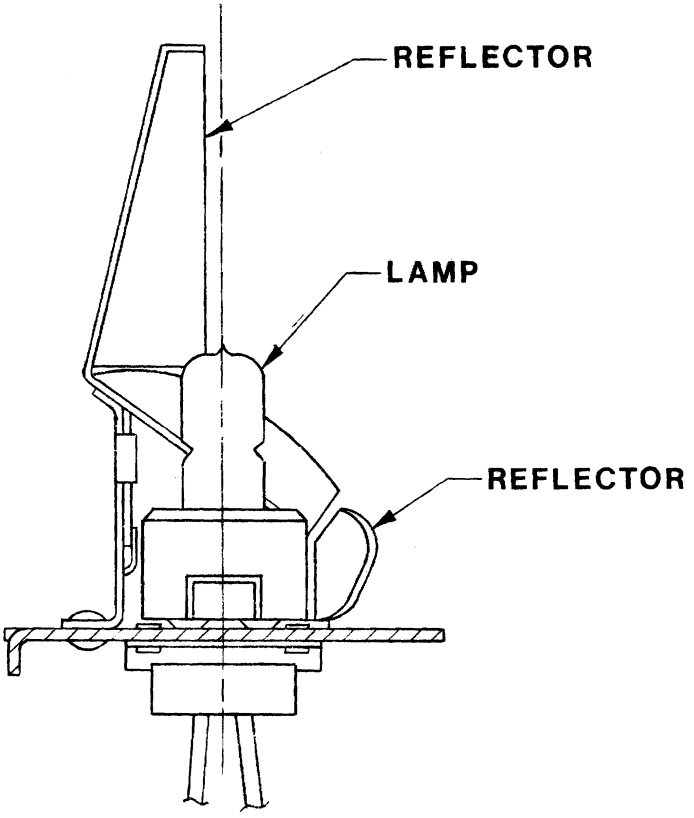

FIGURE 9
CLASS IV OPTICAL SUB-ASSEMBLY

NOTE: THE HEIGHT OF THIS UNIT MAY BE CHANGED BY THE ADDITION OF A LENGTH OF 2" EMT AND A STANDARD EMT COUPLING

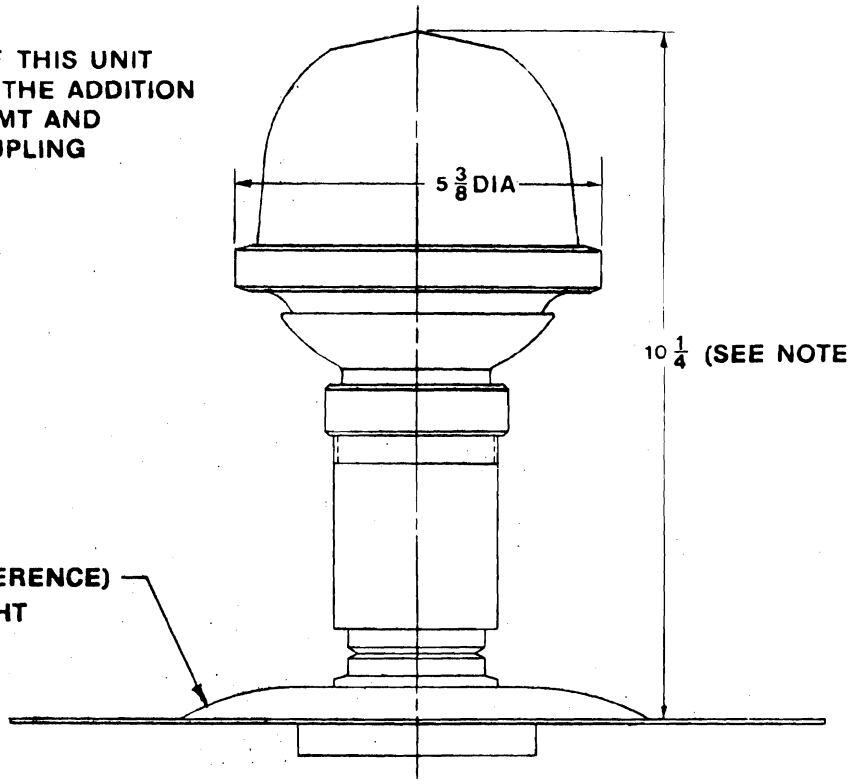

CLASS II & III

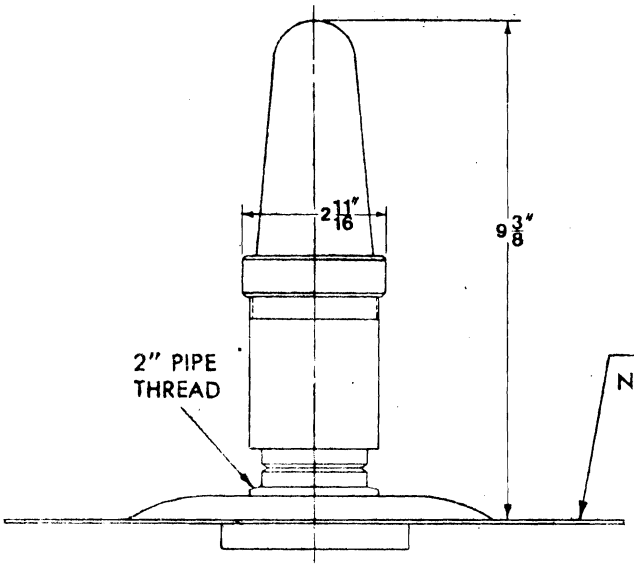

CLASS IV

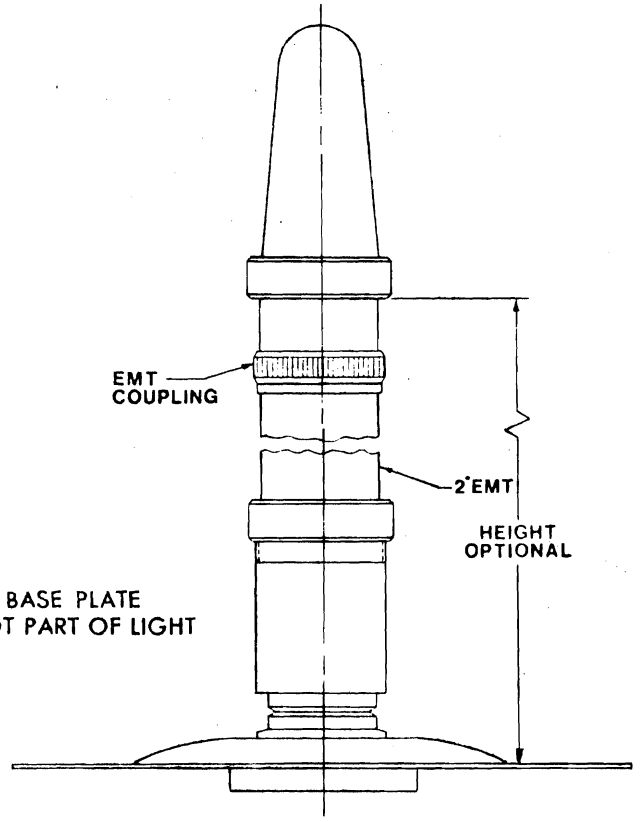

CLASS IV

FIGURE 10

CLASS II, III, & IV INSTALLATION

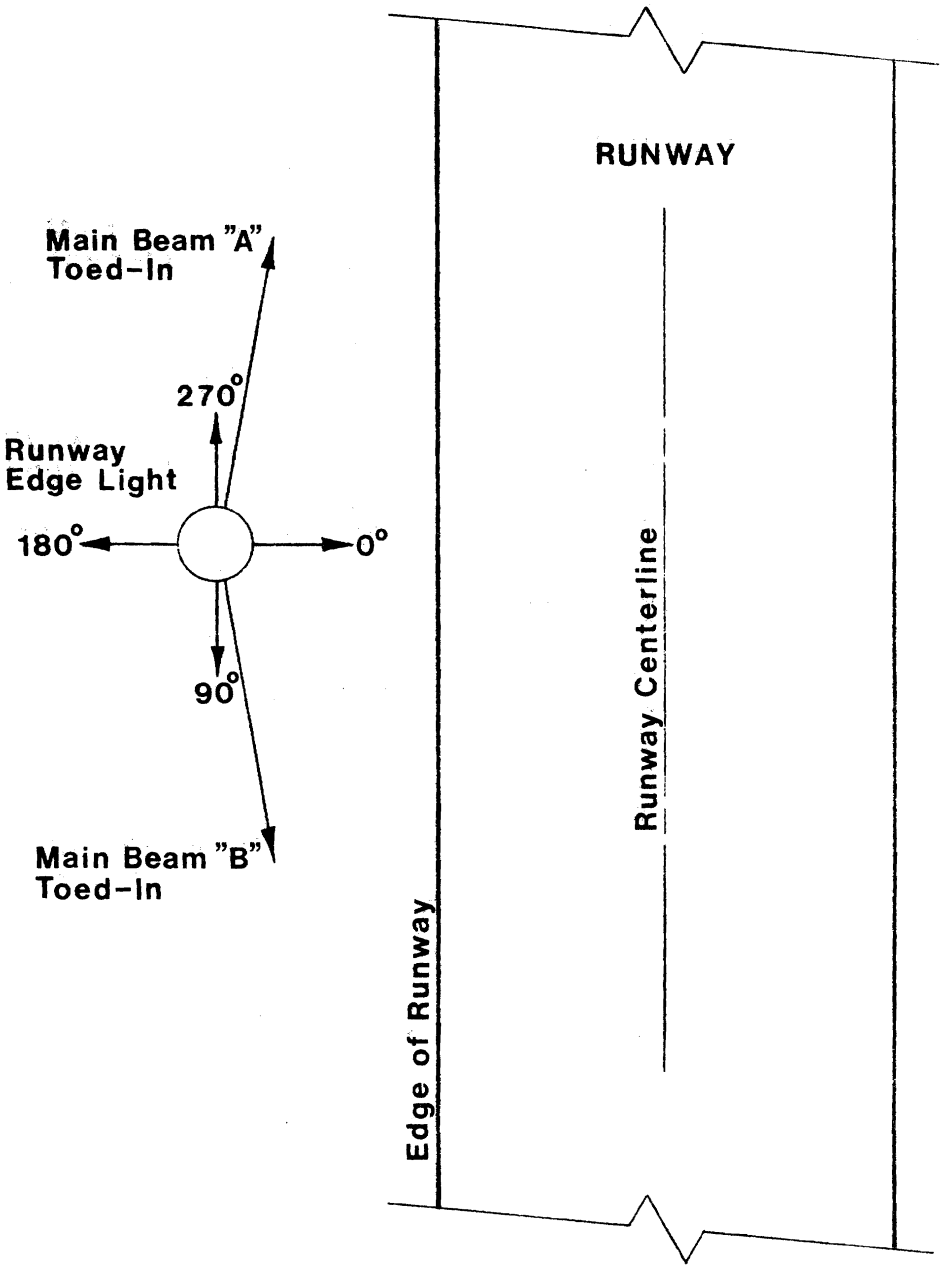

FIGURE 11
PHOTOMETRIC LIGHT ORIENTATION

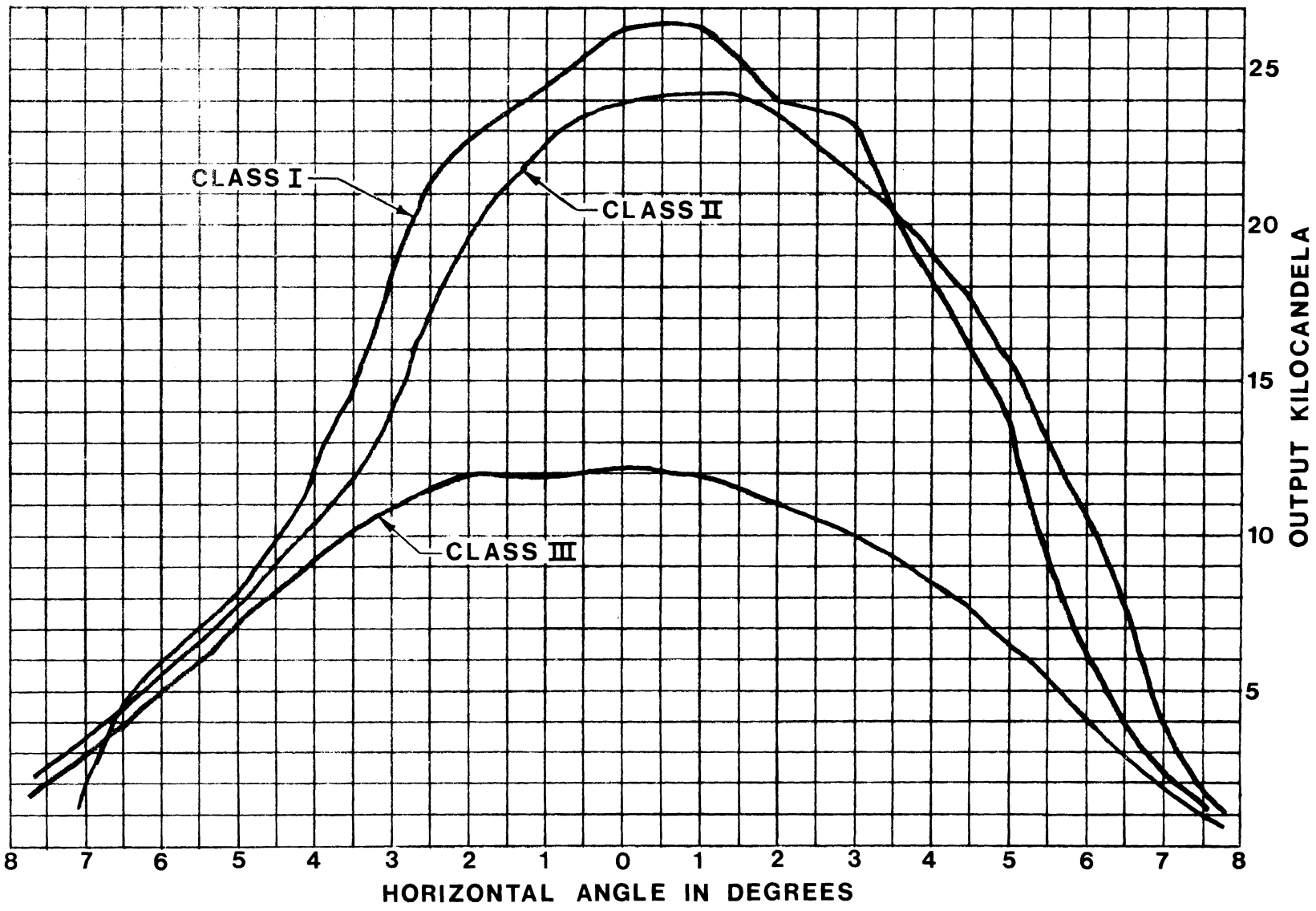

FIGURE 12
INTENSITY DISTRIBUTION CURVE
MAIN BEAMS $4\frac{1}{2}^{\circ}$ VERTICAL

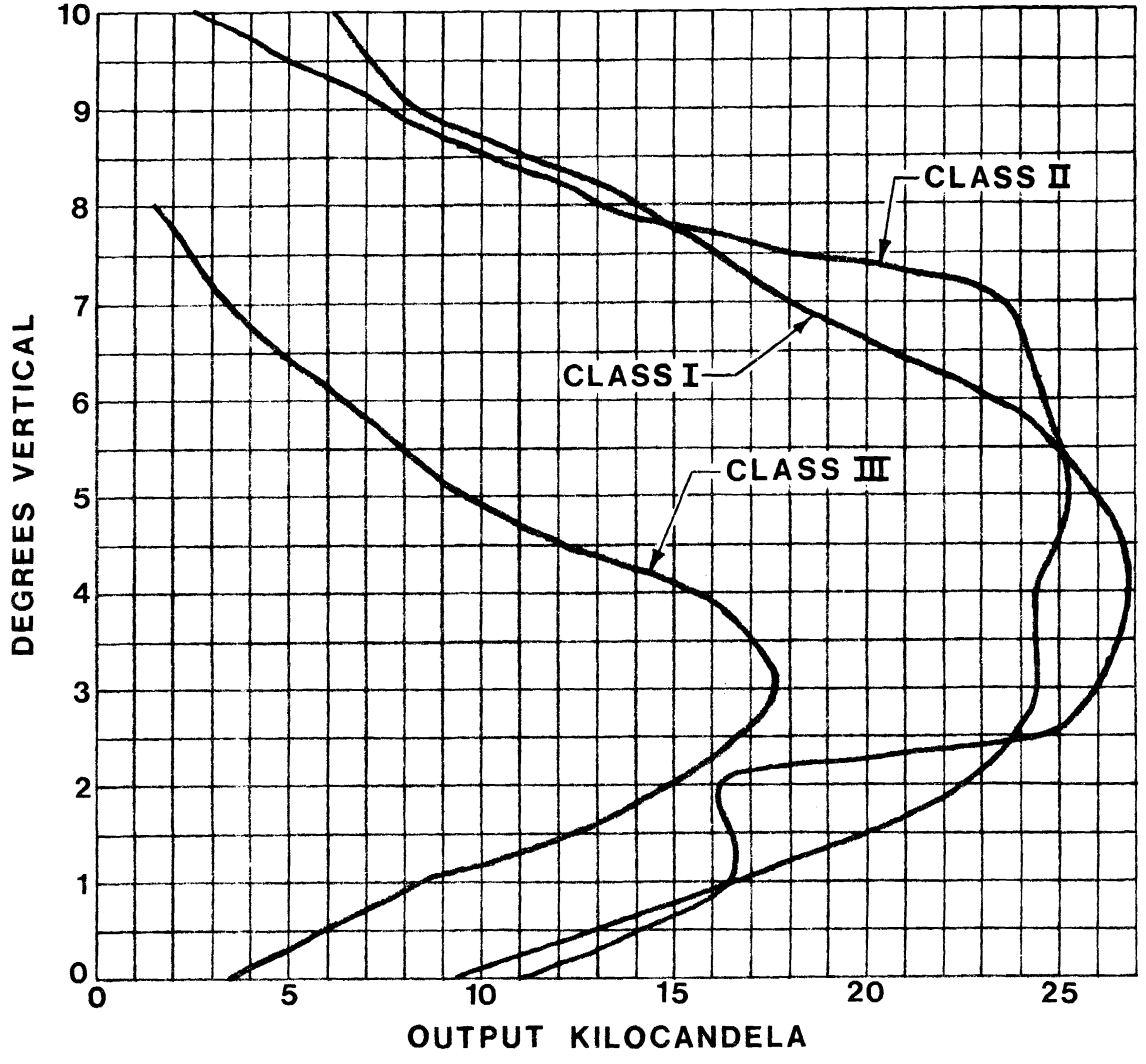

FIGURE 13
INTENSITY DISTRIBUTION CURVE
VERTICAL SCAN THROUGH CENTER OF BEAM

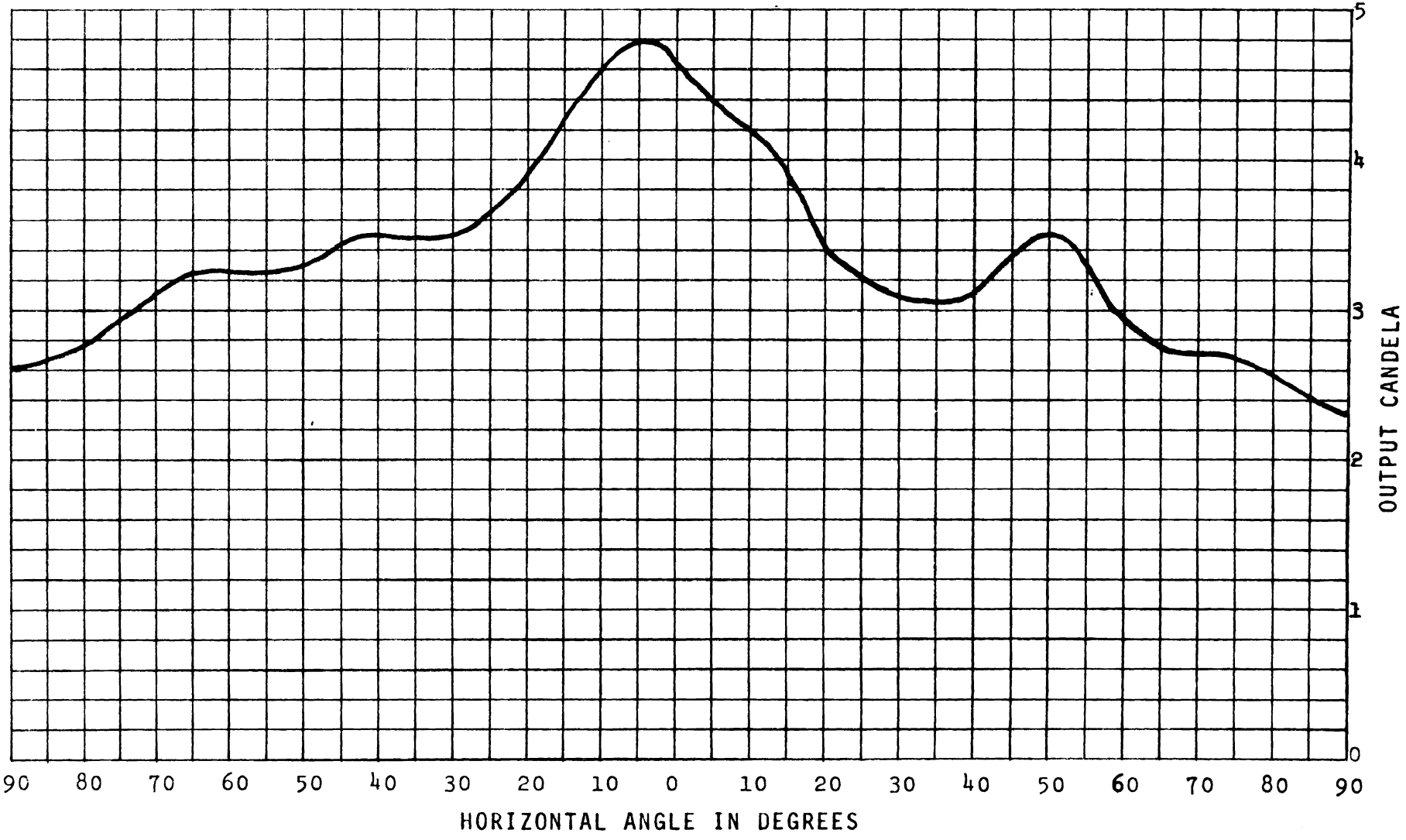

FIGURE 14

CLASS IV INTENSITY DISTRIBUTION CURVE

MAIN BEAM 4-1/2° VERTICAL

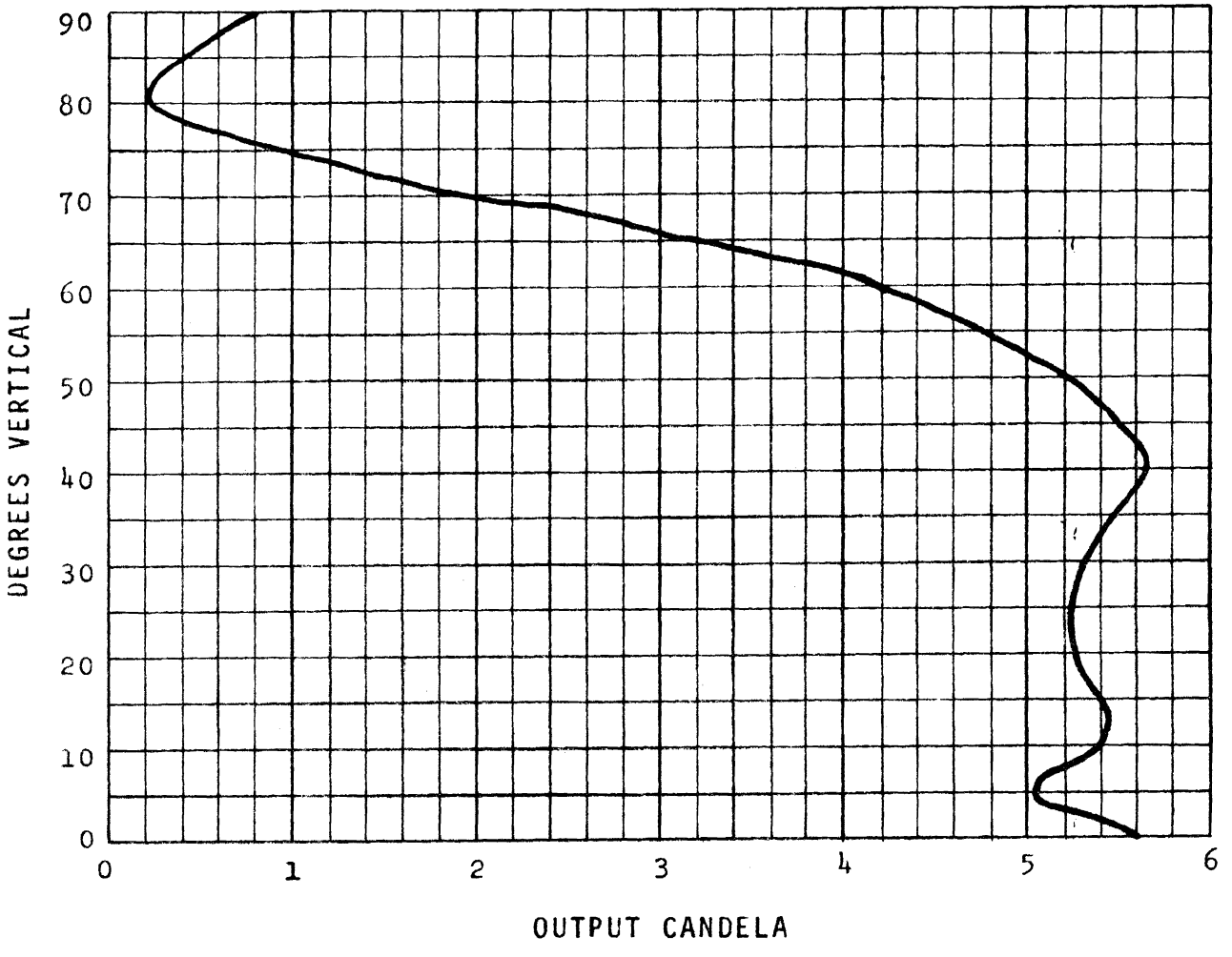

FIGURE 15

CLASS IV INTENSITY DISTRIBUTION CURVE

VERTICAL SCAN THROUGH CENTER OF BEAM

CONTRACT NO.FA72WA-2726

APPENDIX

SEPCO REPORT 7312
and
YORK TEST REPORT Y-1308

Report of Tests

on

Runway Edge Lights

Contract DOT-FA72WA-2726

prepared for

Federal Aviation Administration

by

Sepco Division

Connecticut International Corporation

Windsor Locks, Connecticut

TABLE OF CONTENTS

		PAGE
1.0	Introduction	1
2.0	Test and Test Sequence	2
3.0	Test Procedures	3
	3.1 High Temperature	3
	3.2 Low Temperature	3
	3.3 Humidity	3
	3.4 Salt Fog	3
	3.5 Jet Blast	3
	3.6 Thermal Shock	4
	3.7 Vibration	4
	3.7.1 Vibration Planes	4
	3.7.2 Vibration Frequencies	4
	3.7.3 Inspection	5
	3.8 Photometric	5
4.0	Test Results	6
	4.1 High Temperature	6
	4.2 Low Temperature	6
	4.3 Humidity	6
	4.4 Salt Fog	6
	4.5 Jet Blast	6
	4.6 Thermal Shock	6
	4.7 Vibration	6
	4.8 Photometric	7
	4.8.1 Class I	7
	4.8.2 Class II	7
	4.8.3 Class III	7
	4.8.4 Class IV	8

1.0 INTRODUCTION

Tests described in this report were performed on SEPCo runway edge lights part numbers 20010, 40595, 40600, 40610 and in accordance with FAA approved test plan 7214.

The tests described in paragraphs 3.1, 3.2, 3.6 and 3.8 were witnessed by a FAA contract technical representative.

2.0 TESTS AND TEST SEQUENCE

The order of testing was optional and several units were used in order to expedite testing. The tests were as follows:

Test	Test Procedure Paragraph	Test Result Paragraph
High Temperature	3.1	4.1
Low Temperature	3.2	4.2
Humidity	3.3	4.3
Salt Fog	3.4	4.4
Jet Blast	3.5	4.5
Thermal Shock	3.6	4.6
Vibration	3.7	4.7
Photometric	3.8	4.8

3.0 TEST PROCEDURE

The tests were conducted in accordance with SEPCo test plan 7214 as noted in the following paragraphs:

3.1 HIGH TEMPERATURE

The light assembly (one of each class) shall be operated at full current in a chamber at +55°C. for eight hours. At the conclusion of the test each unit shall be checked for glass breakage, blackening of the lamp or other signs of deterioration. Any sign of deterioration shall be cause for rejection.

3.2 LOW TEMPERATURE

The light assembly (one of each class) shall be placed in a low temperature chamber for 24 hours at -55°C. After 12 hours at -55°C., the lamps shall be turned on for the remaining 12 hours. There shall be no evidence of breakage or degradation.

3.3 HUMIDITY

The light assemblies (one of each type) shall be placed in a humidity chamber and tested in accordance with MIL-STD-810B procedure IV. Each light assembly shall be energized at 6.6 amperes, and the voltage recorded. Voltage readings shall be taken as described above for steps #1, 4 and 8 of the specified humidity test. At the conclusion of the test the four classes of lights shall be inspected to detect evidence of physical degradation. Any sign of degradation which would prevent long-term operation of the unit shall be cause for rejection.

3.4 SALT FOG

The light assembly (one of each class) shall be operated at 6.6 amperes and the voltage recorded. The item will then be salt fog tested in accordance with MIL-STD-810B, Method 509, Procedure I for a period of 24 hours. At the end of the exposure period the unit shall be energized to 6.6 amperes and the voltage recorded. Any sign of degradation which would prevent long-term operation of the light unit shall be cause for rejection.

3.5 JET BLAST

The light assemblies (Class II and Class III only) shall be set up in the FAA wind test facility at NAFEC. The wind shall be increased to a velocity of 350 miles per hour in a direction perpendicular to the vertical axis of the unit for 15 minutes. There shall be no evidence of cracking or glass breakage after the test.

3.6 THERMAL SHOCK

The light assemblies (one of each class) shall be operated at full rated power for 7 hours. Cold water (5°C. maximum) from a watering can shall be poured onto the unit while still energized. There shall be no sign of glass breakage or deterioration.

3.7 VIBRATION

The Class I light assembly shall be mounted securely in place on the surface of the test table of the vibration testing machine. It shall be mounted in a horizontal position corresponding to its position in place on a runway. Angles or brackets may be used to hold it in place on the test table. The top assembly, with an electrical shunt across the lamp terminals, and with the lamps in place, shall be installed with provisions to determine whether continuity of the electrical circuit is maintained during the tests.

3.7.1 VIBRATION PLANES

The light assembly, mounted in place on the test table as specified above, shall be vibrated in three planes, or directions of vibration, as follows:

1. In a direction perpendicular to the plane of the test table; i.e., vibrated vertically.

2. Vibrated horizontally in a direction parallel to the light axis; i.e., parallel to the line through the centers of the light channels.

3. Vibrated horizontally in a direction at right angles to the light axis; i.e., normal to the line through the centers of the light channels.

3.7.2 VIBRATION FREQUENCIES

This test shall be conducted in two parts, if required. In the initial test, the light assembly shall be vibrated in each direction through frequency ranges of 20 to 2,000 CPS until the G's shown in Table I are reached. The duration of each sweep on the light assembly shall be 10 minutes and electrical continuity shall be continuously monitored through the initial vibration tests. If the lamp envelope and filament remain intact, the vibration tests are considered complete. If the lamp envelope and/or filament fail, the second part of the test shall be initiated. In the second part, the shunt shall be removed

from the lamp terminals, the damaged lamp shall be removed from the lampholder, and a new lamp of the type specified for use in the light assembly shall be inserted in the lampholder. Without energizing the lamp filament, the light assembly shall be vibrated again, as specified in paragraph 3.7a, through the frequencies shown in Table I, until the acceleration reaches three G's in each plane. The duration of each sweep on the light assembly shall be 10 minutes.

TABLE I - VIBRATION FREQUENCIES

Acceleration G's	Frequency CPS
5	20 to 500
10	500 to 2000

3.7.3 INSPECTION

After the above required tests have been completed, the light assembly shall be inspected. Mechanical failure of any component, loosening of any part or fastener, or any discernible movement of lamps in lampholders during the initial test shall be cause for rejection. If the second test is required, breakage of the lamp filament and/or envelope shall also be cause for rejection.

3.8 PHOTOMETRIC

Each class of light shall be tested to determine conformance to the photometric requirements of the contract. Isocandela curves of sufficient detail shall be plotted to clearly show conformance. Any evidence of photometric degradation shall be cause for rejection.

4.0 TEST RESULTS

The following are the results of the tests described in Section 3 of this report.

4.1 HIGH TEMPERATURE

The units were placed in the test chamber and stabilized at +55°C. They were operated at 6.6 amps for 8 hours. At the end of this period the units were inspected. There was no evidence of deterioration.

4.2 LOW TEMPERATURE

The units were placed in the test chamber and stabilized at -55°C. The units were held at this temperature for 12 hours with no current supplied. At the end of this period the units were operated at 6.6 amps for an additional 12 hours. The units were then inspected. There was no evidence of deterioration.

4.3 HUMIDITY

See York Report Y-1308.

4.4 SALT FOG

See York Report Y-1308.

4.5 JET BLAST

Class II and III light assemblies were tested at NAFEC at a velocity of 350 miles per hour. Both units passed. The velocity was then increased to maximum, 621 miles per hour. At the end of this test the units were checked. There were no signs of breakage, cracking, deterioration or the like.

4.6 THERMAL SHOCK

The units were mounted similar to normal installation and operated at 6.6 amps for 7 hours. At the end of this period cold water (5°C.) was poured over the units. There was no breakage or deterioration.

The units were also tested by immersing them part way at an angle into a tank of ice and water. This creates maximum thermal gradient. All units passed this test as well.

4.7 VIBRATION

See York Report Y-1308.

4.8 PHOTOMETRIC

The photometrics test was conducted with a Model 580-20 Radiometer System as manufactured by E.G. and G.

4.8.1 CLASS I - HIGH INTENSITY SEMIFLUSH RUNWAY EDGE LIGHT ASSEMBLY

The photometric data for the two main beams of this fixture is shown in Figure 1 "A" side and Figure 2 "B" side.

4.8.2 CLASS II - HIGH INTENSITY ELEVATED RUNWAY EDGE LIGHT ASSEMBLY

The photometric data for the two main beams of this fixture is shown in Figure 3, "A" side and Figure 4, "B" side.

Circling Guidance "On" Runway Side:

Figure 5, 0° and 7°

Figure 6, 12° and 13° 50'

Figure 7, 15° and 25°

Figure 8, 30° and 45°

Figure 9, 55° and 65°

Figure 10, 75° and 85°

Circling Guidance "Off" Runway Side:

Figure 11, 0° and 5°

Figure 12, 10° and 25°

Figure 13, 35° and 45°

Figure 14, 55° and 65°

Figure 15, 75° and 85°

4.8.3 CLASS III - MEDIUM INTENSITY ELEVATED RUNWAY EDGE LIGHT ASSEMBLY

The photometric data for the two main beams of this fixture is shown in Figure 16, "A" side and Figure 17, "B" side.

Circling Guidance "On" Runway Side:

Figure 18, 0° and 7°

Figure 19, 15° and 20° and 25°

Figure 20, 35° and 45° and 55°

Figure 21, 65° and 75° and 85°

Circling Guidance "Off" Runway Side:

Figure 22, 0° and 4°

Figure 23, 10° and 15°

Figure 24, 25° and 35°

Figure 25, 45° and 55° and 65°

Figure 26, 75° and 85°

4.8.4 CLASS IV - ELEVATED TAXIWAY EDGE LIGHT ASSEMBLY

The photometric data for this fixture is shown in Figure 27.

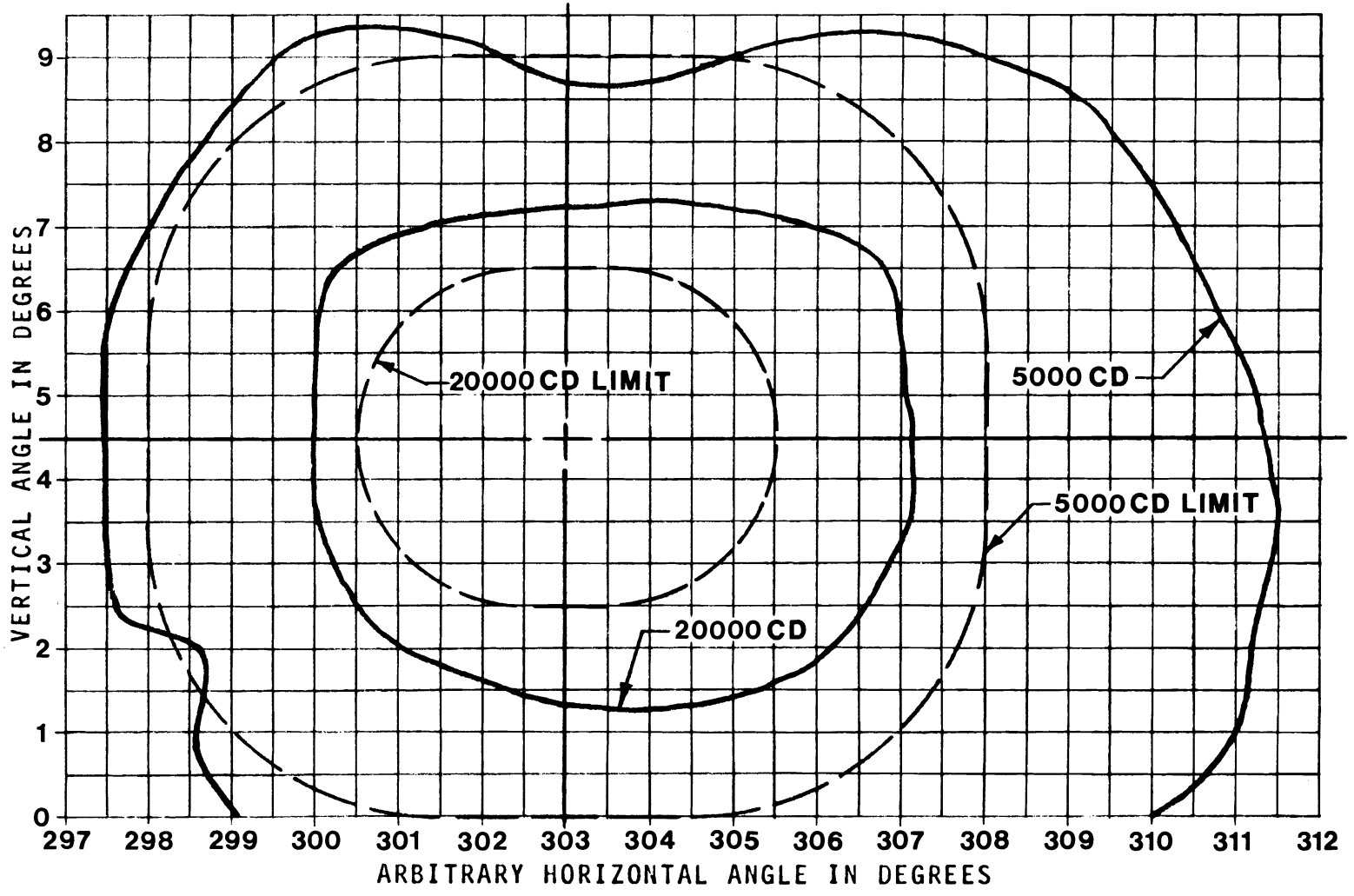

RELATIVE POSITION OF LIGHT
ON GONIOMETER UNCHANGED
BETWEEN SIDES A & B
READINGS

AVERAGED BEAM CONTOUR
OF 20,000 CD TO SECURE
3-1/2° TOE ℄

EDGELIGHT-INPAVEMENT
SIDE A

FIGURE 1

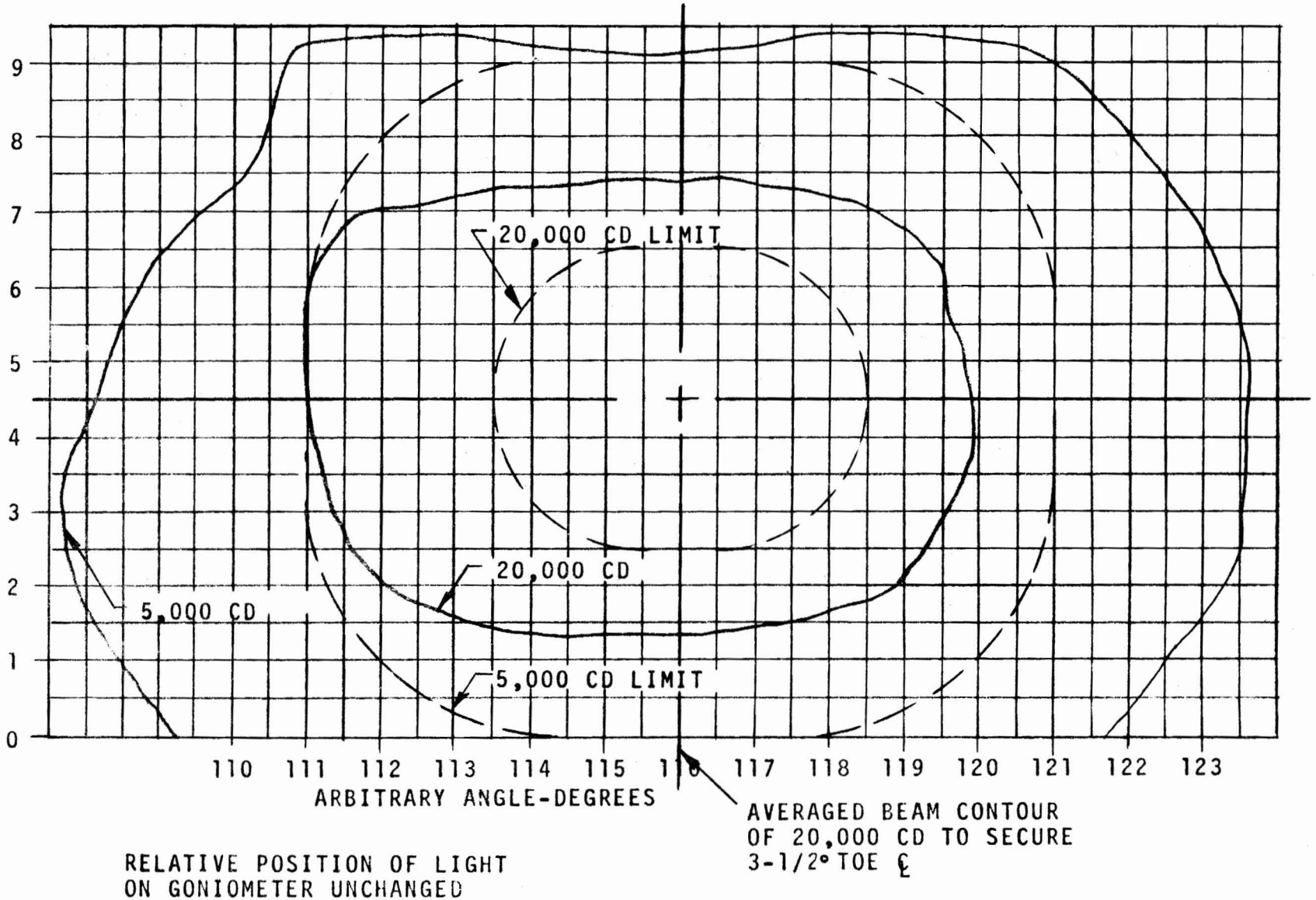
9
8
7
6
5
4
3
2
1
0
20,000 CD LIMIT
20,000 CD
5,000 CD
5,000 CD LIMIT
110 111 112 113 114 115 116 117 118 119 120 121 122 123
ARBITRARY ANGLE-DEGREES
AVERAGED BEAM CONTOUR
OF 20,000 CD TO SECURE
3-1/2° TOE ℄
RELATIVE POSITION OF LIGHT
ON GONIOMETER UNCHANGED
BETWEEN SIDES A & B READINGS
EDGE LIGHT-IN-PAVEMENT
QUALIFICATION UNIT
SIDE B

FIGURE 2

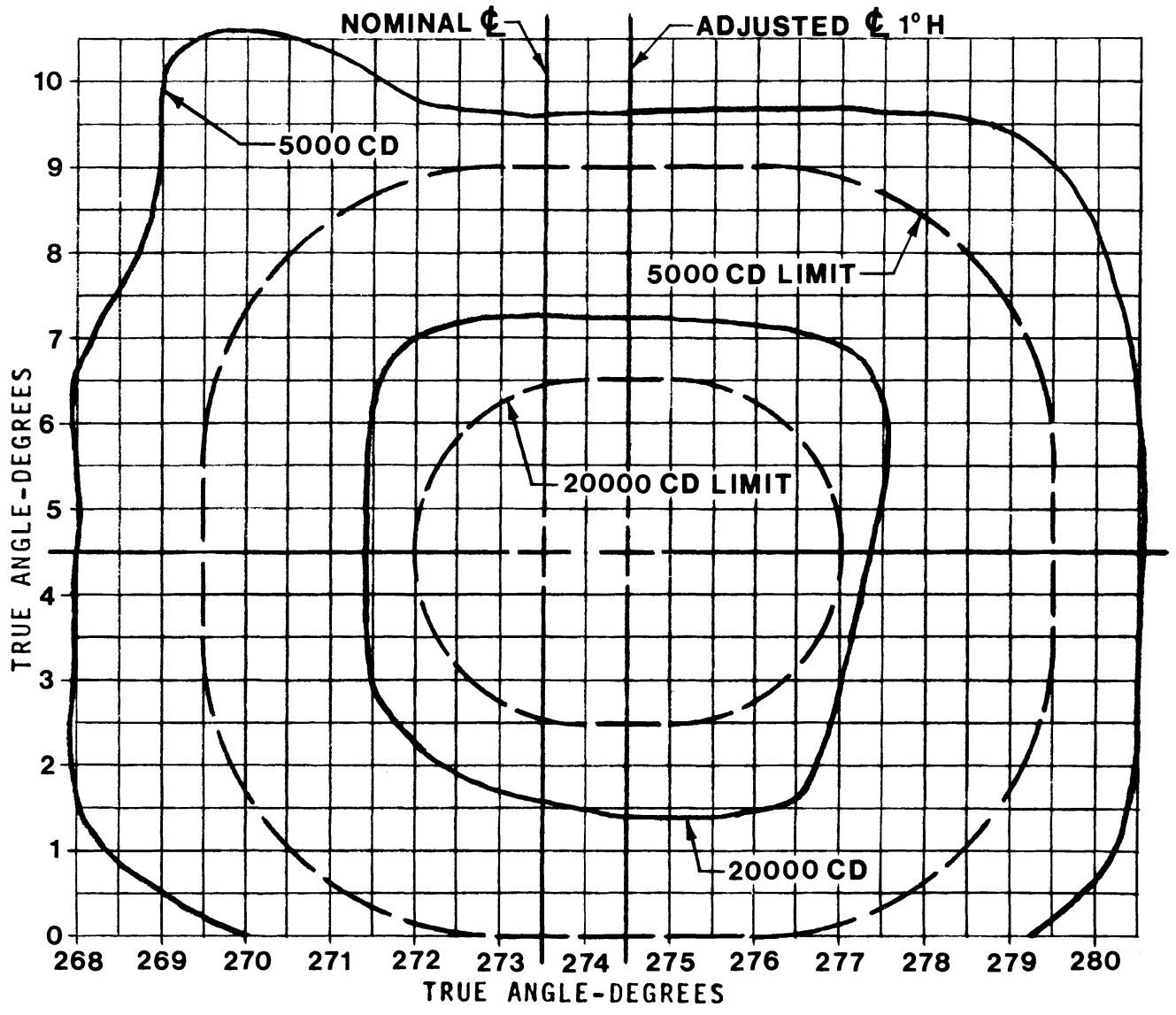

POSITION OF LIGHT ON
GONIOMETER UNCHANGED
BETWEEN READINGS SIDE A & B

HIGH INTENSITY EDGE LIGHT
(ELEVATED)
QUALIFICATION UNIT
WITNESSED BY E. L. REAMER &
T. C. EVANS
SIDE A

FIGURE 3

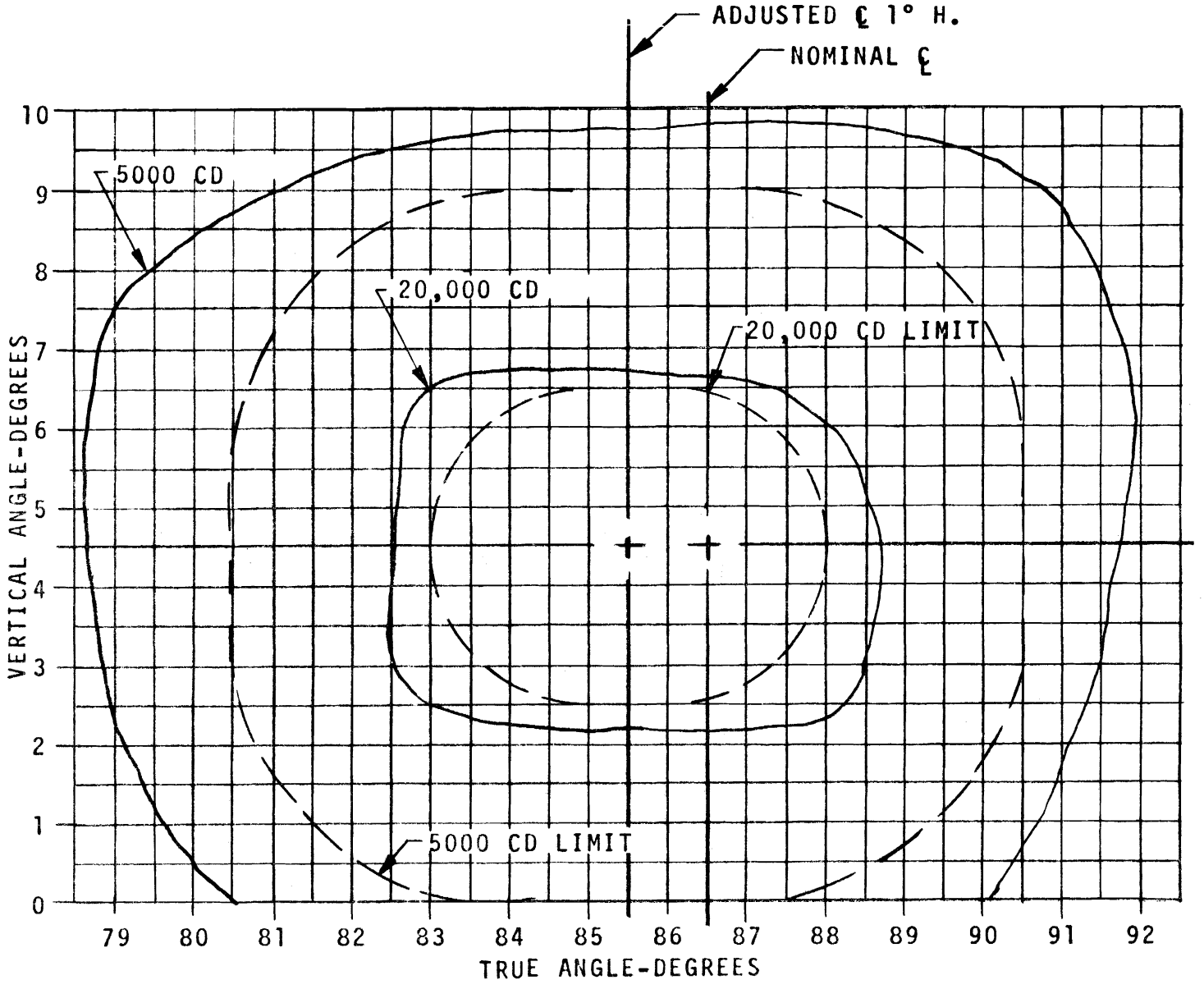

POSITION OF LIGHT ON GONIOMETER
UNCHANGED BETWEEN READINGS SIDE
A & B

HIGH INTENSITY EDGE LIGHT (ELEVATED)
QUALIFICATION UNIT
SIDE B

FIGURE 4

FIGURE 5

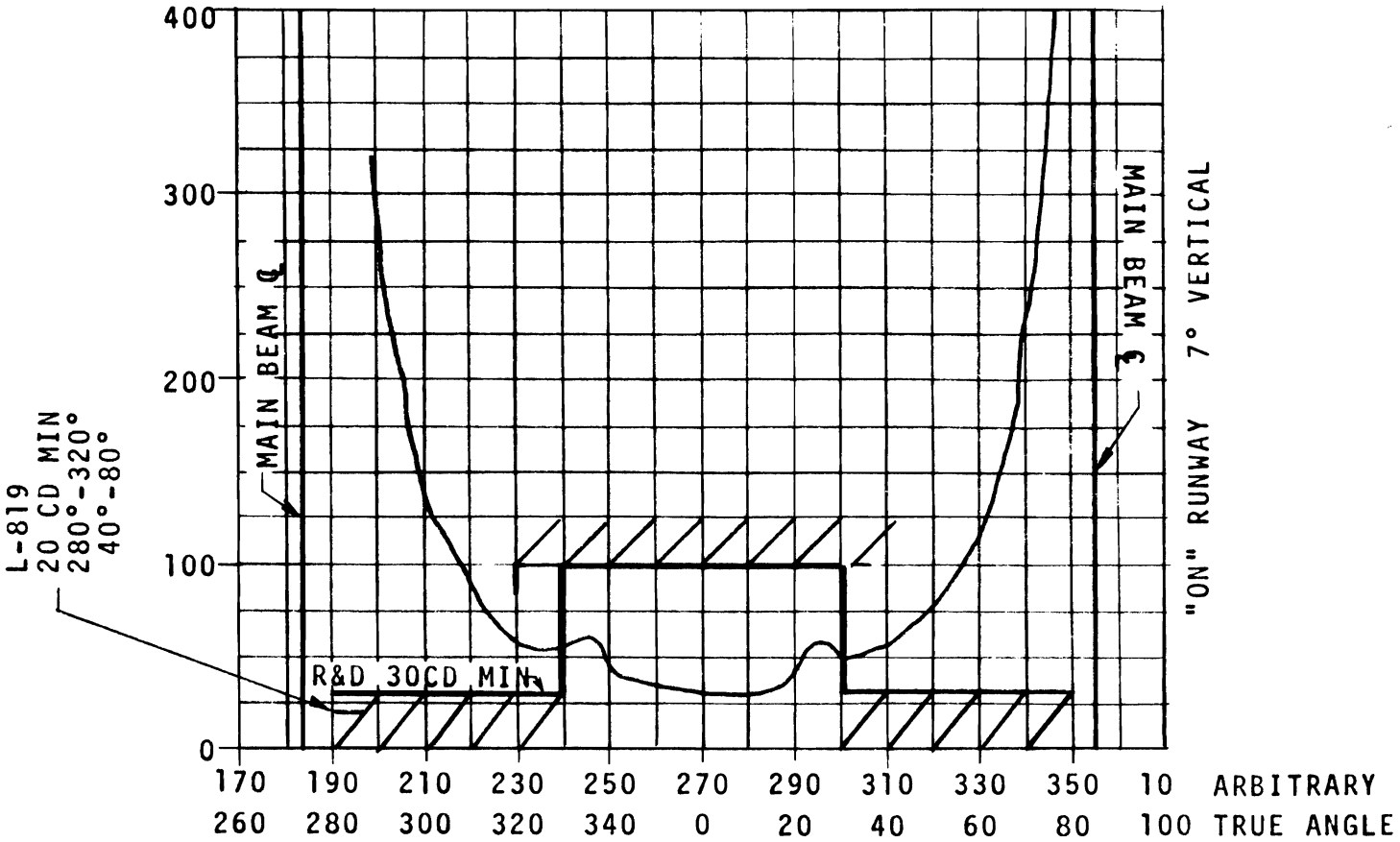
400
300
200
100
0
MAIN BEAM ℄
MAIN BEAM ℄
L-819
20 CD MIN
280°-320°
40°-80°
R&D 30CD MIN
"ON" RUNWAY 7° VERTICAL
170 190 210 230 250 270 290 310 330 350 10 ARBITRARY
260 280 300 320 340 0 20 40 60 80 100 TRUE ANGLE

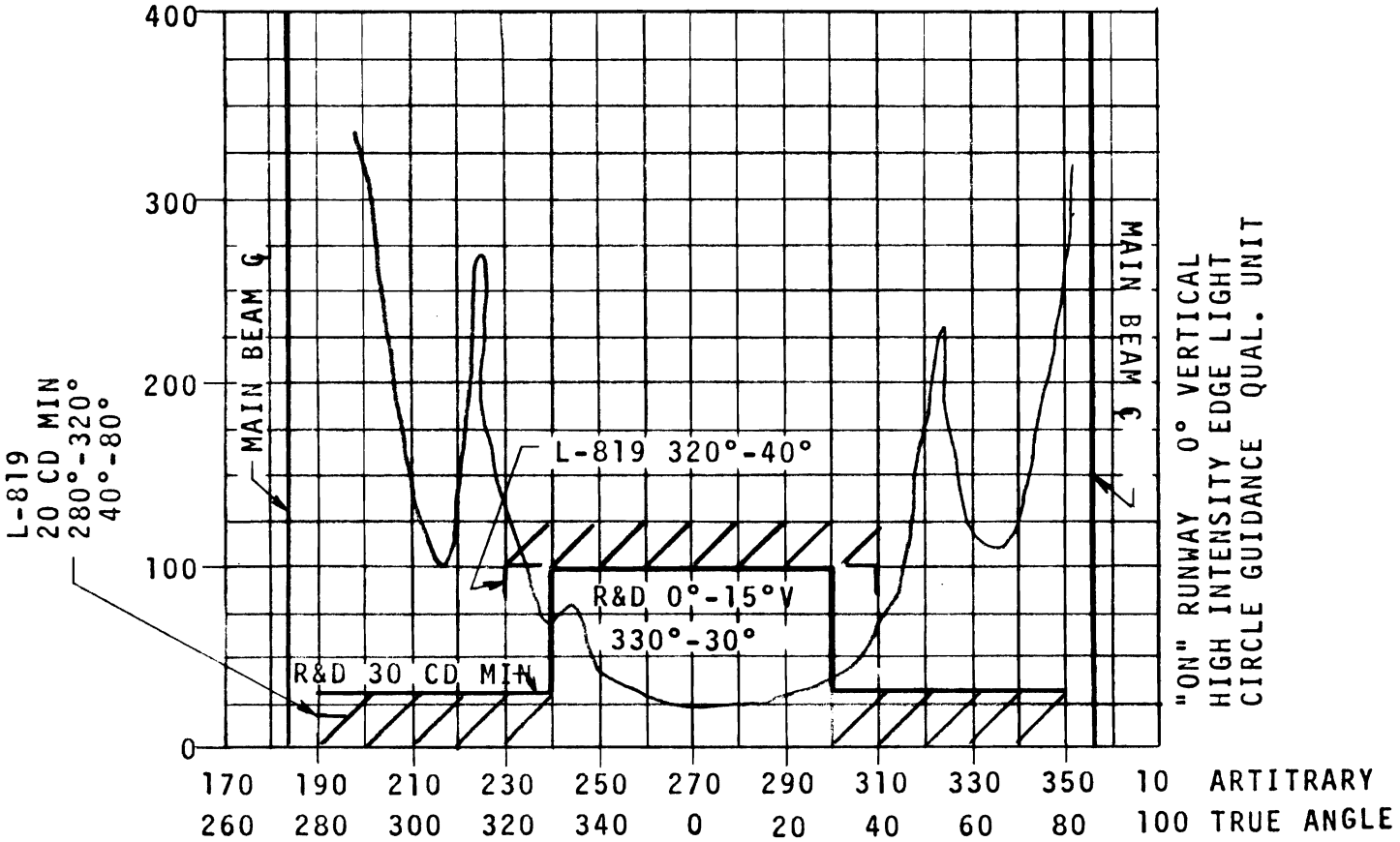
400
300
200
100
0
MAIN BEAM ℄
MAIN BEAM ℄
L-819
20 CD MIN
280°-320°
40°-80°
L-819 320°-40°
R&D 0°-15°V
330°-30°
R&D 30 CD MIN
"ON" RUNWAY 0° VERTICAL
HIGH INTENSITY EDGE LIGHT
CIRCLE GUIDANCE QUAL. UNIT
170 190 210 230 250 270 290 310 330 350 10 ARTITRARY
260 280 300 320 340 0 20 40 60 80 100 TRUE ANGLE

FIGURE 6

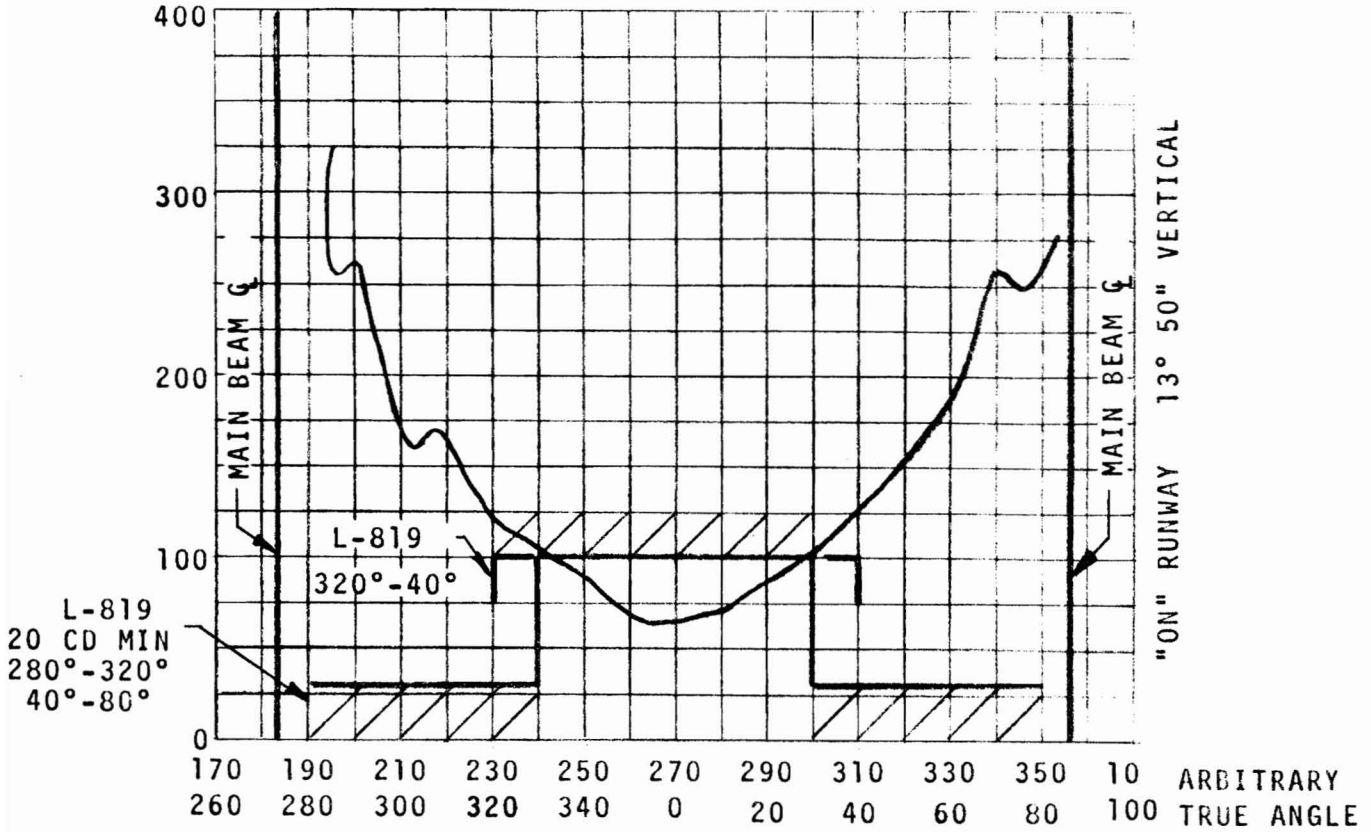
400
300
200
100
0
MAIN BEAM ℄
MAIN BEAM ℄
L-819
320°-40°
L-819
20 CD MIN
280°-320°
40°-80°
"ON" RUNWAY 13° 50" VERTICAL
170 190 210 230 250 270 290 310 330 350 10
260 280 300 320 340 0 20 40 60 80 100
ARBITRARY
TRUE ANGLE

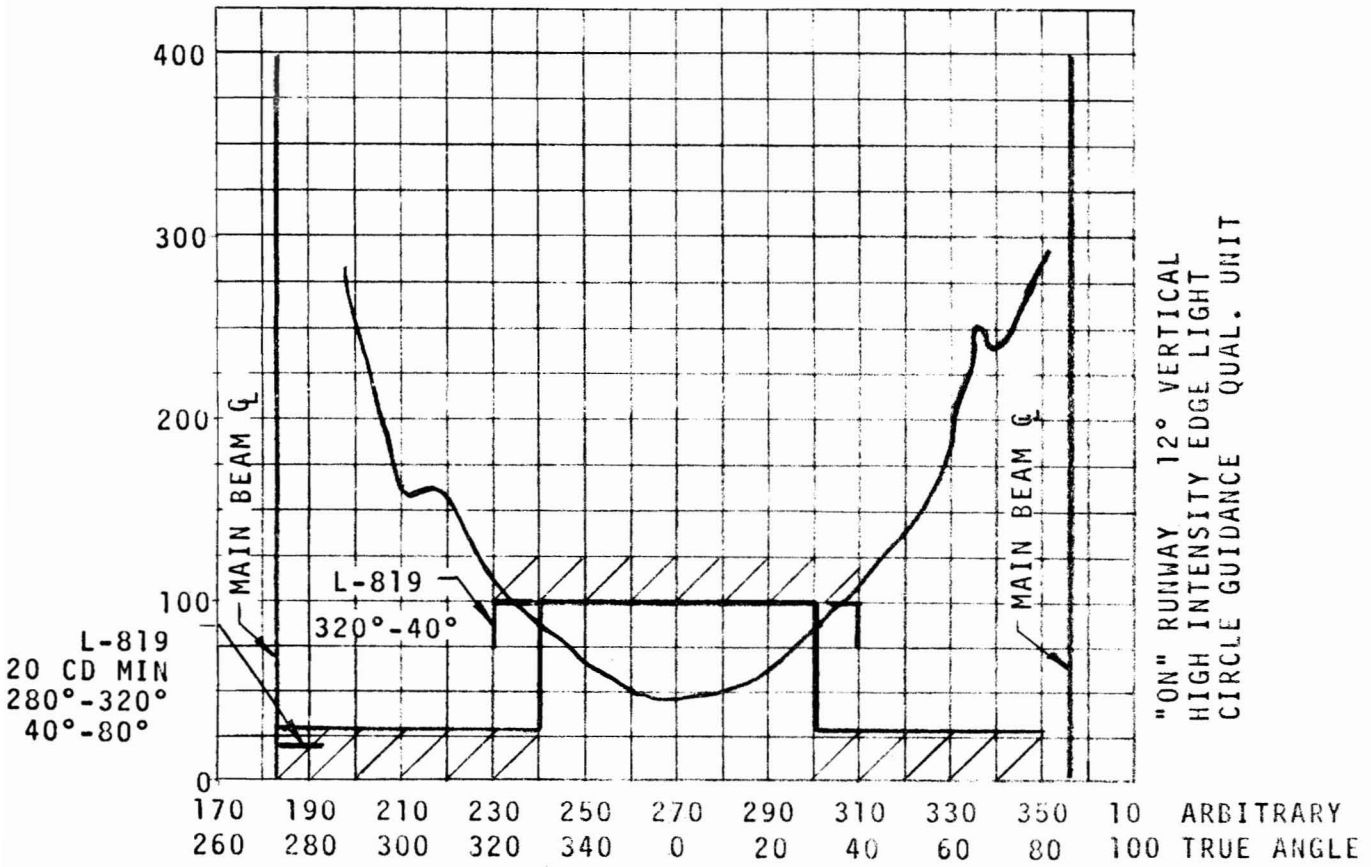
400
300
200
100
0
MAIN BEAM ℄
MAIN BEAM ℄
L-819
320°-40°
L-819
20 CD MIN
280°-320°
40°-80°
"ON" RUNWAY 12° VERTICAL
HIGH INTENSITY EDGE LIGHT
CIRCLE GUIDANCE QUAL. UNIT
170 190 210 230 250 270 290 310 330 350 10
260 280 300 320 340 0 20 40 60 80 100
ARBITRARY
TRUE ANGLE

FIGURE 7

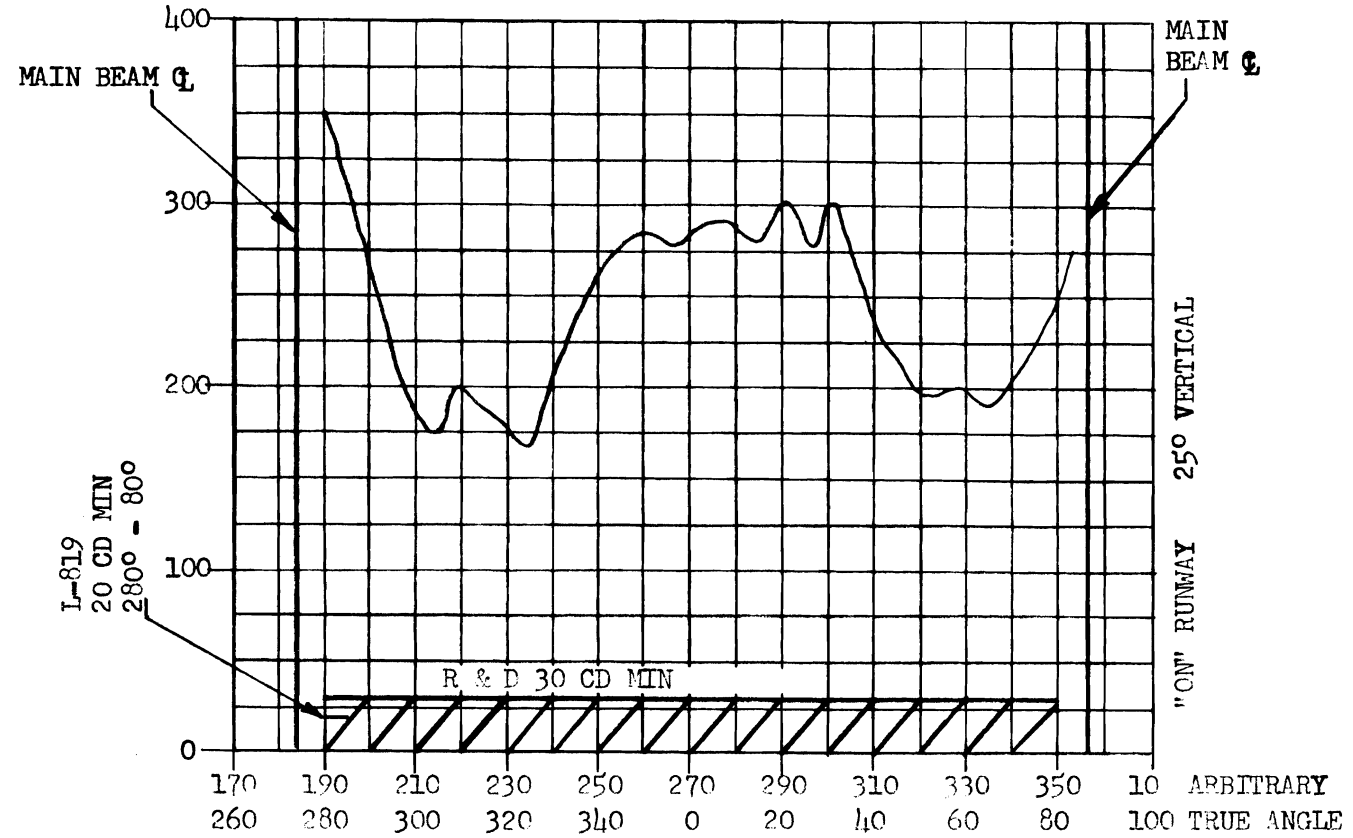
MAIN BEAM ℄
MAIN BEAM ℄
400
300
200
100
0
L-819
20 CD MIN
280° - 80°
R & D 30 CD MIN
"ON" RUNWAY 25° VERTICAL
170 190 210 230 250 270 290 310 330 350 10 ARBITRARY
260 280 300 320 340 0 20 40 60 80 100 TRUE ANGLE

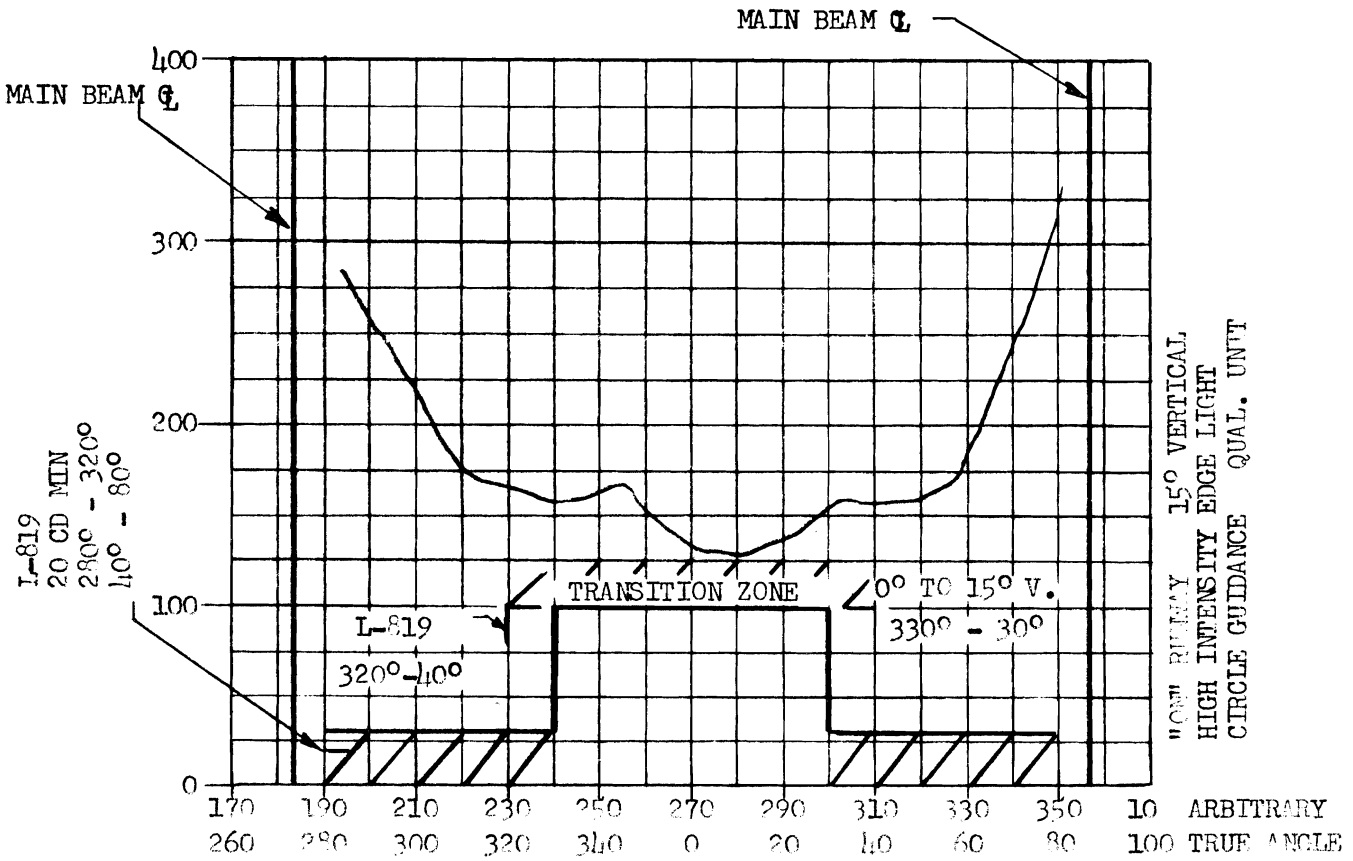
MAIN BEAM ℄
MAIN BEAM ℄
400
300
200
100
0
L-819
20 CD MIN
280° - 320°
40° - 80°
TRANSITION ZONE
0° TO 15° V.
330° - 30°
L-819
320°-40°
"ON" RUNWAY 15° VERTICAL
HIGH INTENSITY EDGE LIGHT
CIRCLE GUIDANCE QUAL. UNIT
170 190 210 230 250 270 290 310 330 350 10 ARBITRARY
260 280 300 320 340 0 20 40 60 80 100 TRUE ANGLE

FIGURE 8

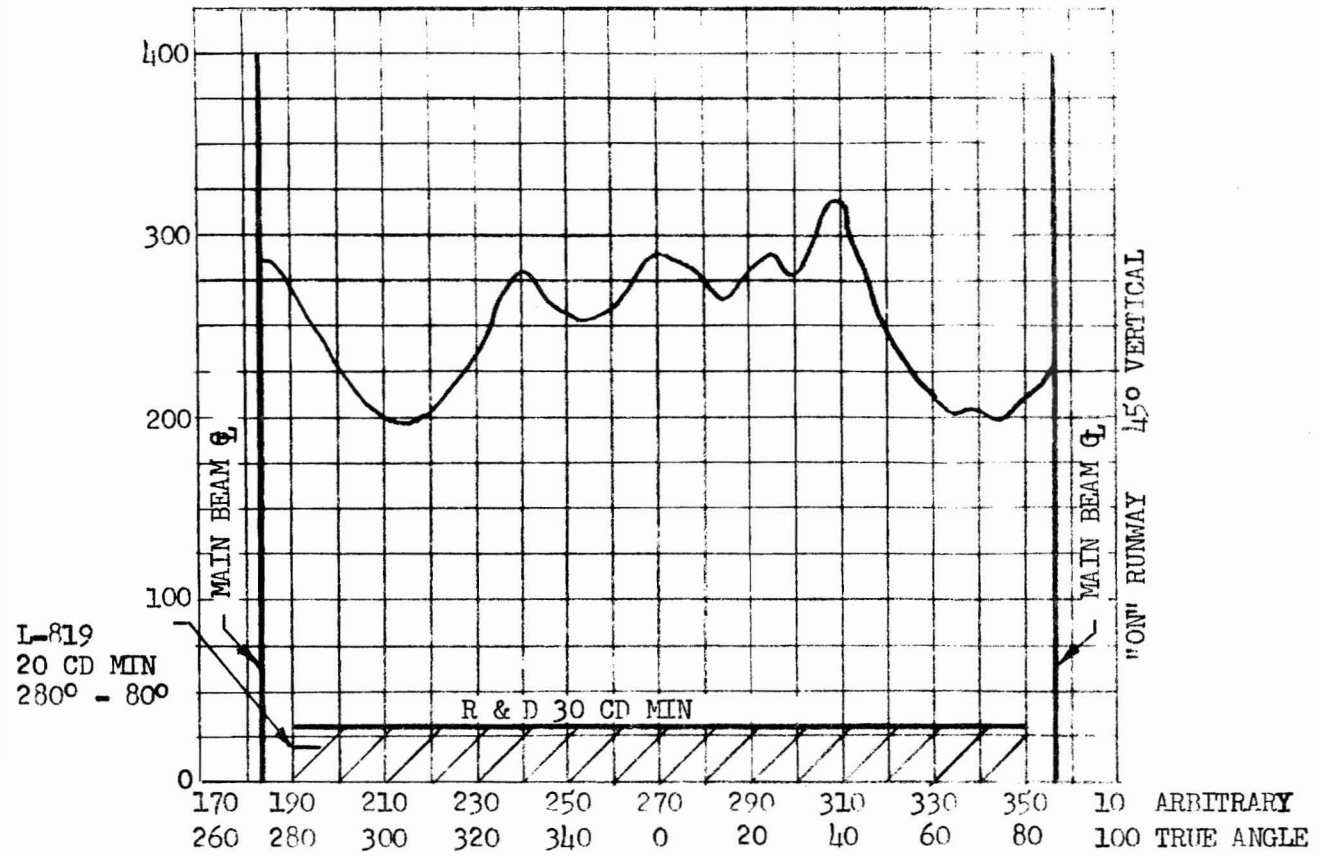
400
300
200
100
0
MAIN BEAM ℄
MAIN BEAM ℄
"ON" RUNWAY 45° VERTICAL
L-819
20 CD MIN
280° - 80°
R & D 30 CD MIN
170 190 210 230 250 270 290 310 330 350 10 ARBITRARY
260 280 300 320 340 0 20 40 60 80 100 TRUE ANGLE

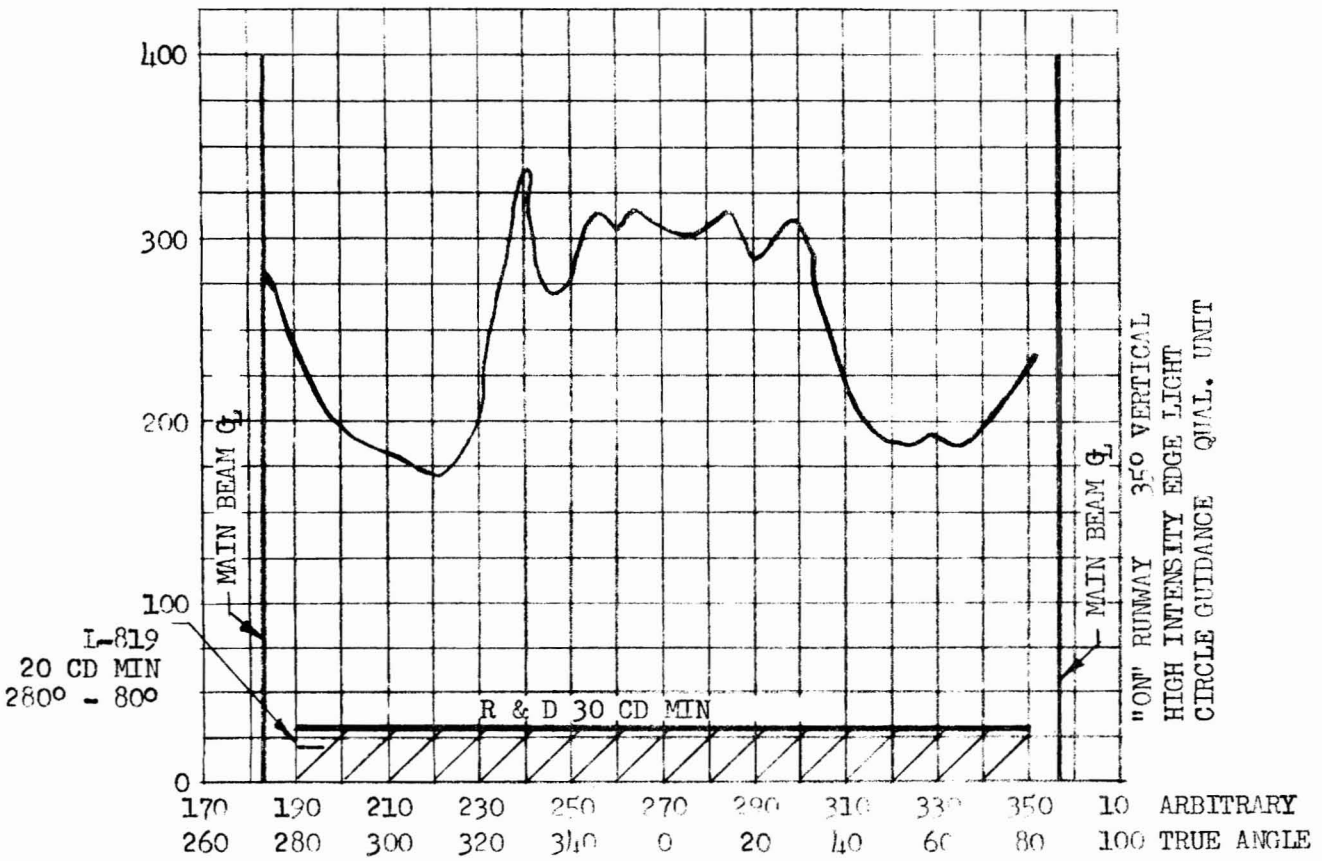
400
300
200
100
0
MAIN BEAM ℄
MAIN BEAM ℄
"ON" RUNWAY 35° VERTICAL
HIGH INTENSITY EDGE LIGHT
CIRCLE GUIDANCE QUAL. UNIT
L-819
20 CD MIN
280° - 80°
R & D 30 CD MIN
170 190 210 230 250 270 290 310 330 350 10 ARBITRARY
260 280 300 320 340 0 20 40 60 80 100 TRUE ANGLE

FIGURE 9

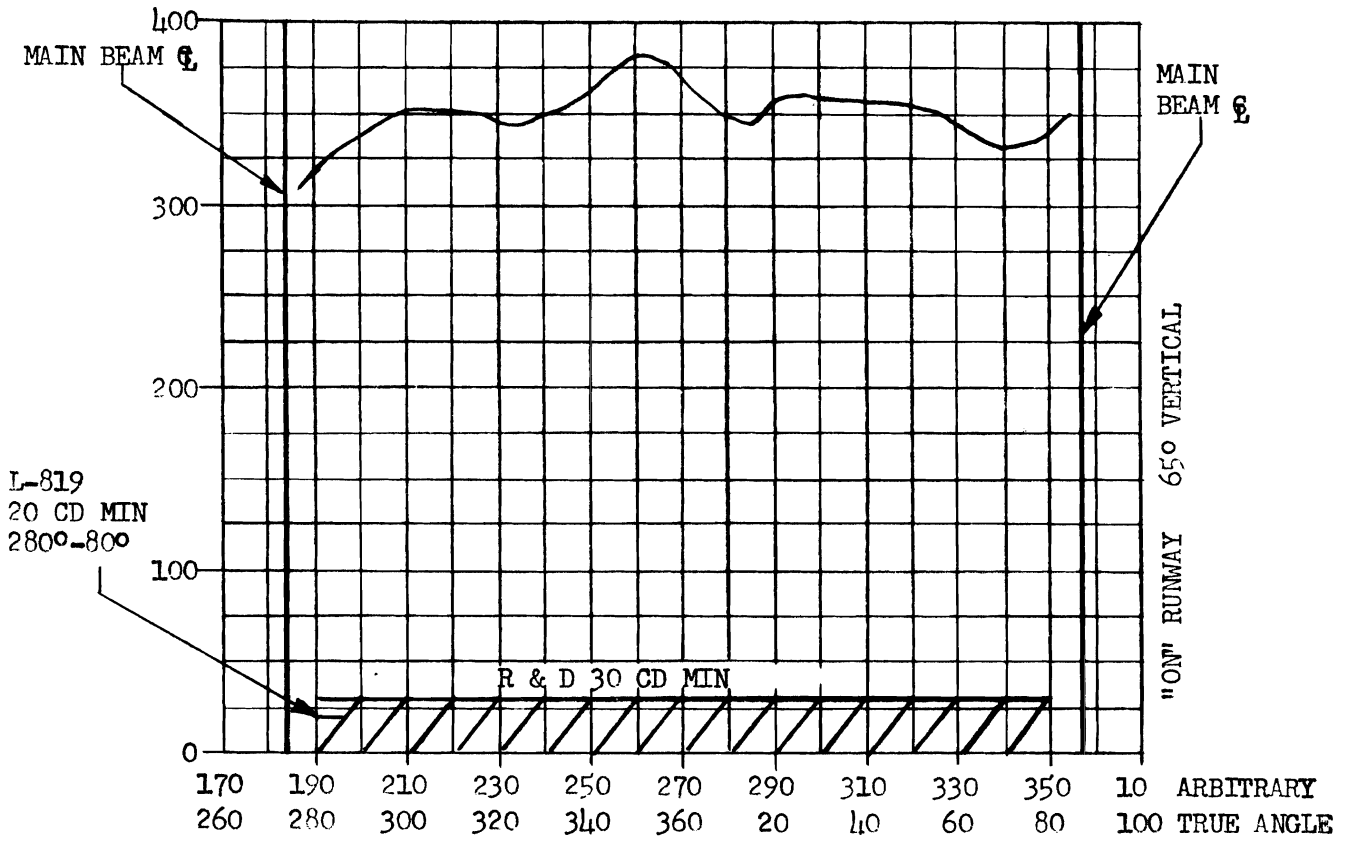
400
300
200
100
0
MAIN BEAM ℄
MAIN BEAM ℄
L-819
20 CD MIN
280°-80°
R & D 30 CD MIN
"ON" RUNWAY 65° VERTICAL
170 190 210 230 250 270 290 310 330 350 10 ARBITRARY
260 280 300 320 340 360 20 40 60 80 100 TRUE ANGLE

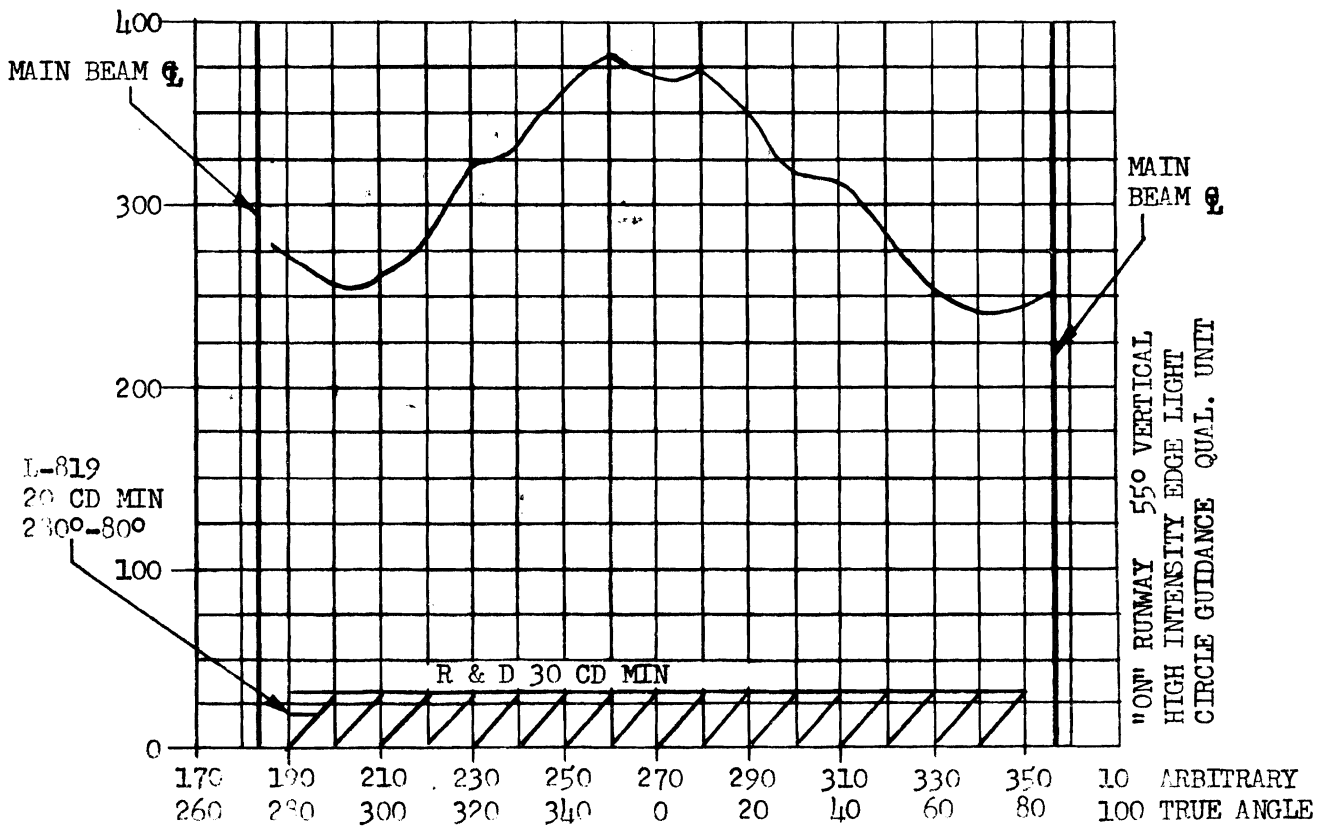
400
300
200
100
0
MAIN BEAM ℄
MAIN BEAM ℄
L-819
20 CD MIN
280°-80°
R & D 30 CD MIN
"ON" RUNWAY 55° VERTICAL
HIGH INTENSITY EDGE LIGHT
CIRCLE GUIDANCE QUAL. UNIT
170 190 210 230 250 270 290 310 330 350 10 ARBITRARY
260 280 300 320 340 0 20 40 60 80 100 TRUE ANGLE

FIGURE 10

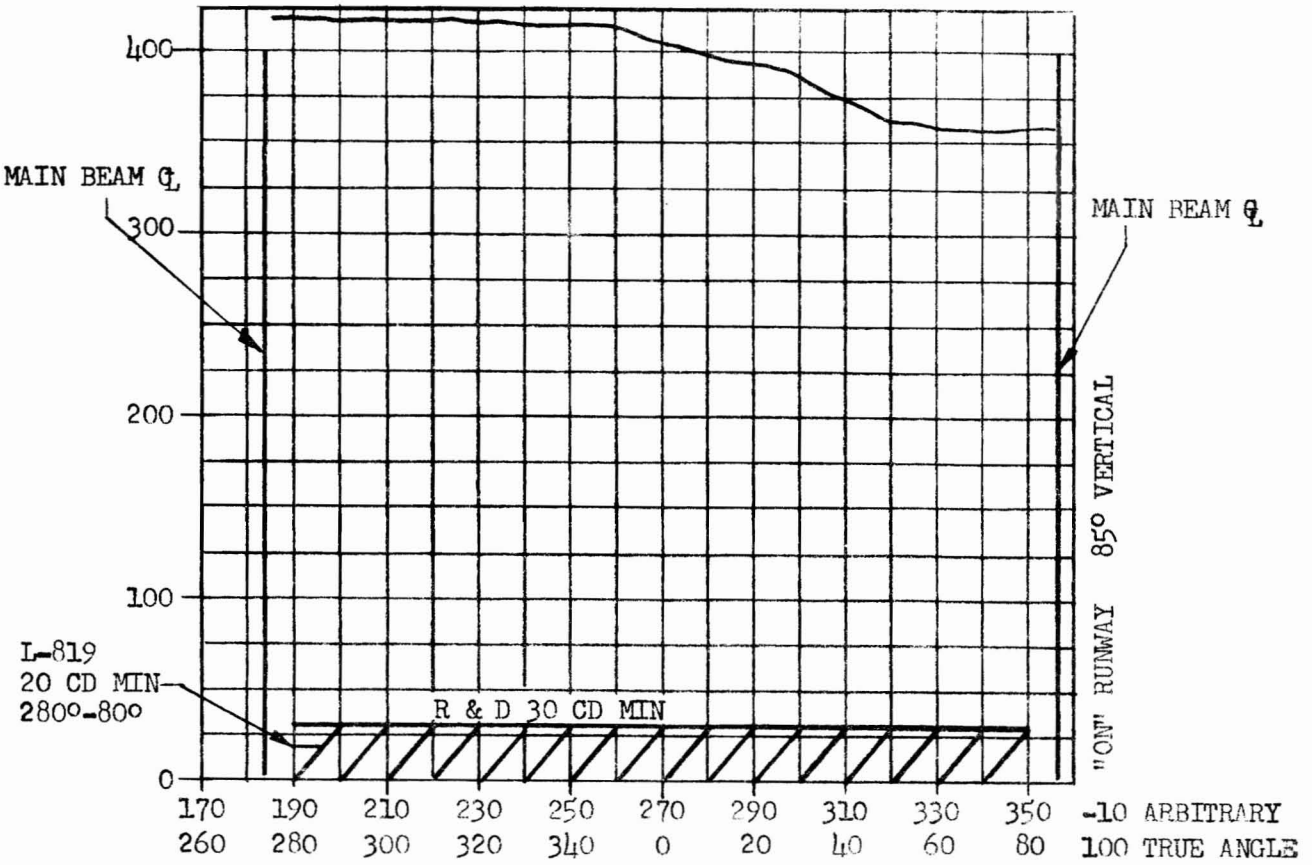
400
300
200
100
0
MAIN BEAM ℄
MAIN BEAM ℄
L-819
20 CD MIN
280°-80°
R & D 30 CD MIN
"ON" RUNWAY 85° VERTICAL
170 190 210 230 250 270 290 310 330 350 -10 ARBITRARY
260 280 300 320 340 0 20 40 60 80 100 TRUE ANGLE

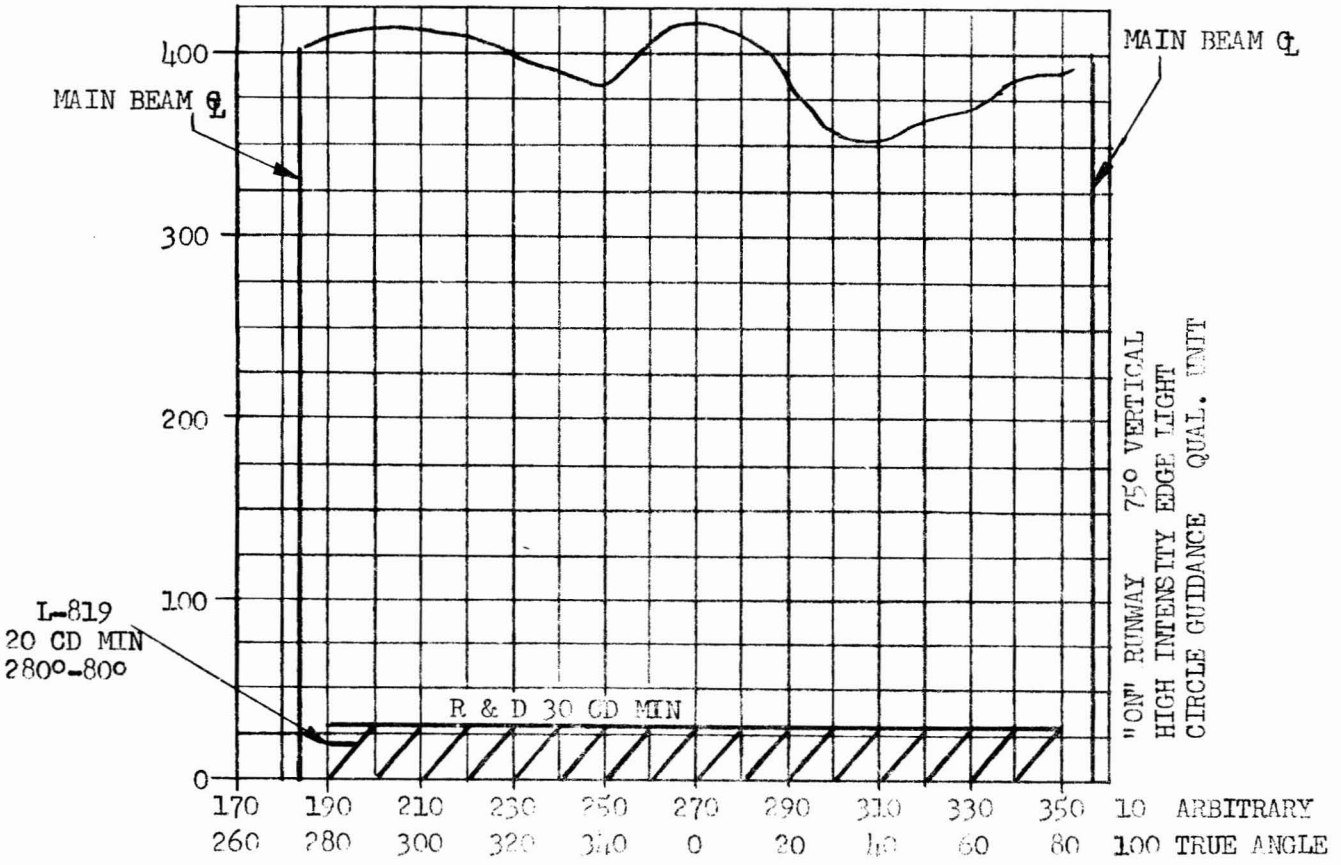
400
300
200
100
0
MAIN BEAM ℄
MAIN BEAM ℄
L-819
20 CD MIN
280°-80°
R & D 30 CD MIN
"ON" RUNWAY 75° VERTICAL
HIGH INTENSITY EDGE LIGHT
CIRCLE GUIDANCE QUAL. UNIT
170 190 210 230 250 270 290 310 330 350 10 ARBITRARY
260 280 300 320 340 0 20 40 60 80 100 TRUE ANGLE

FIGURE 11

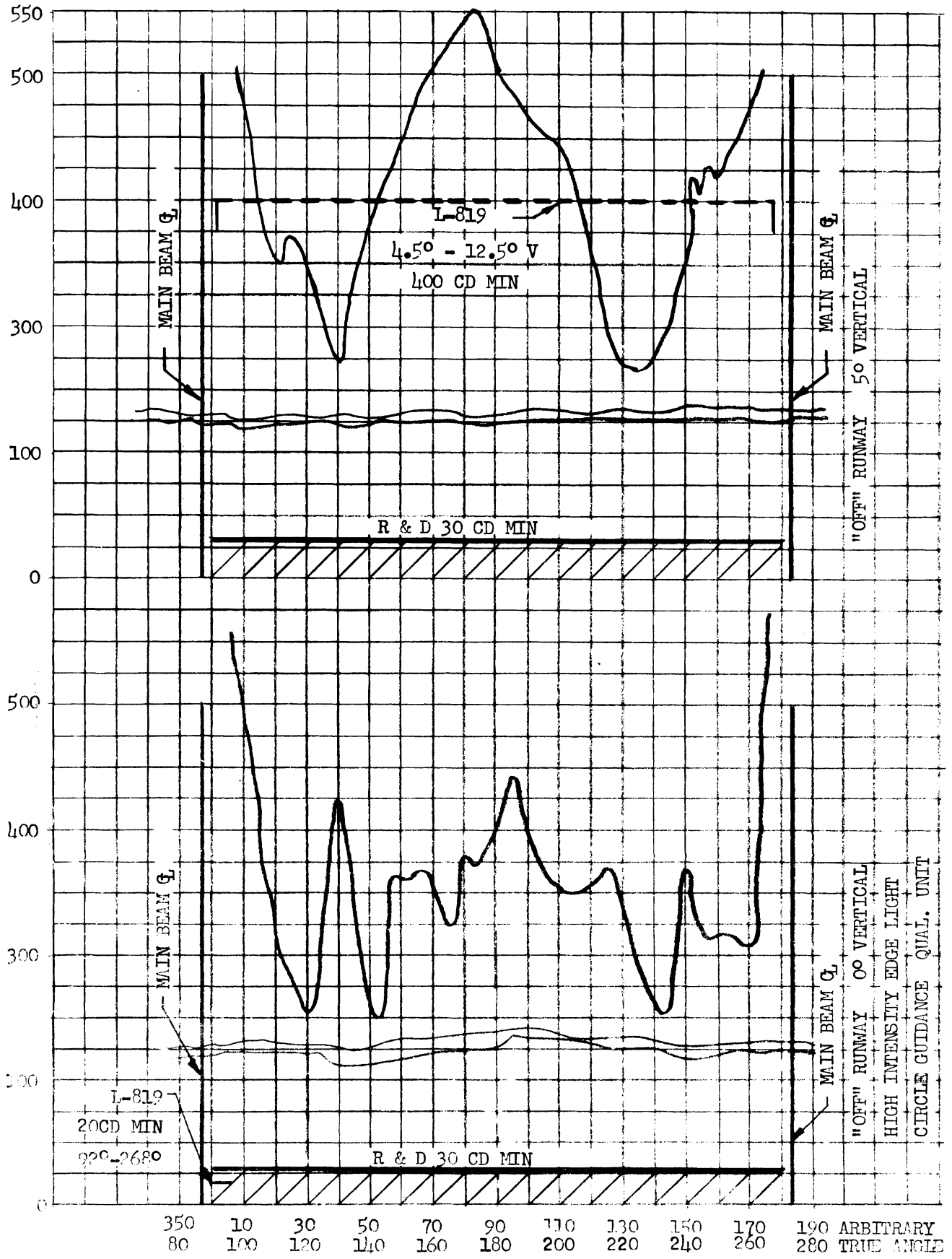
550
500
400
300
100
0
MAIN BEAM ℄
L-819
4.5° - 12.5° V
400 CD MIN
MAIN BEAM ℄
5° VERTICAL
"OFF" RUNWAY
R & D 30 CD MIN
500
400
300
100
0
MAIN BEAM ℄
L-819
20CD MIN
229-268°
R & D 30 CD MIN
MAIN BEAM ℄
0° VERTICAL
"OFF" RUNWAY
HIGH INTENSITY EDGE LIGHT
CIRCLE GUIDANCE QUAL. UNIT
350 80
10 100
30 120
50 140
70 160
90 180
110 200
130 220
150 240
170 260
190 280
ARBITRARY TRUE ANGLE

FIGURE 12

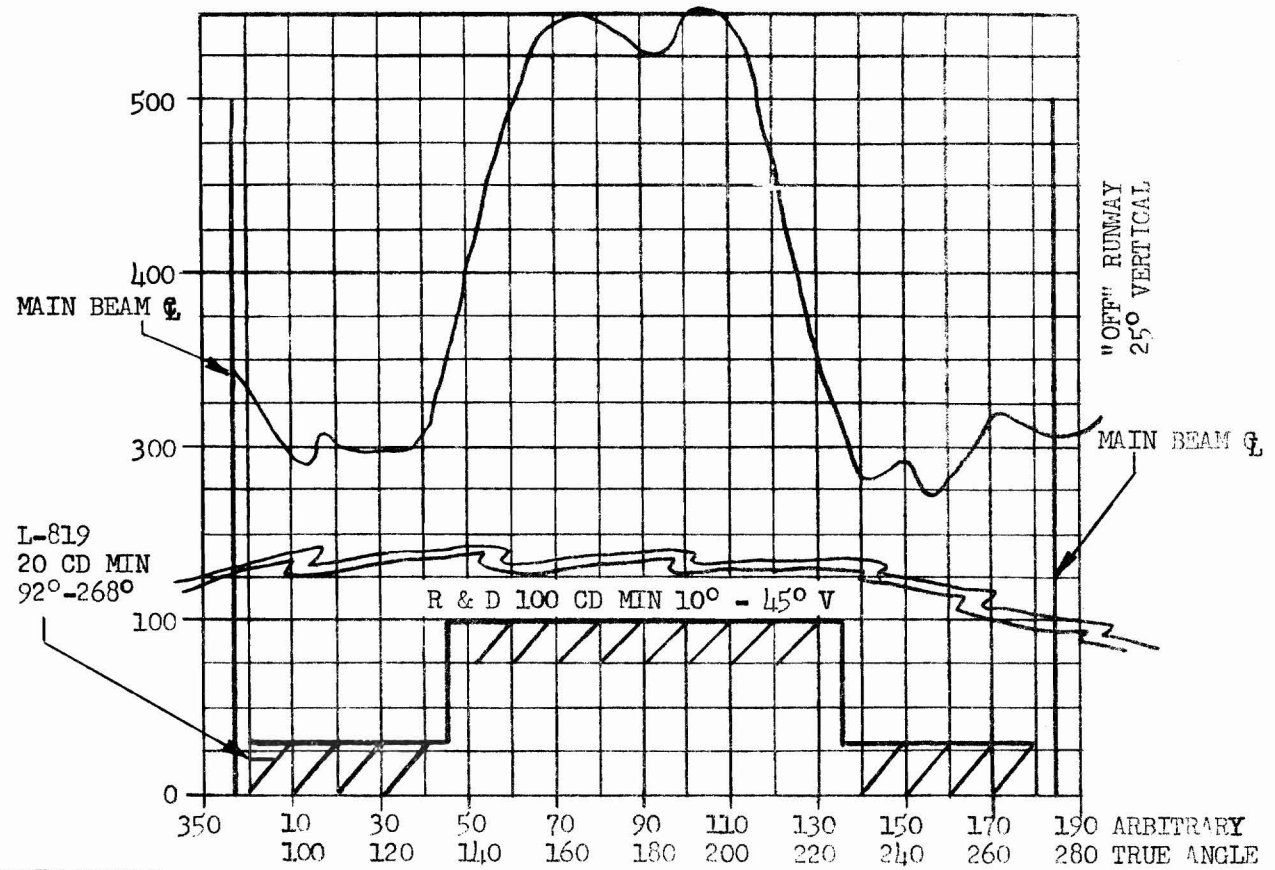
500
400
300
100
0
MAIN BEAM ℄
L-819
20 CD MIN
92°-268°
R & D 100 CD MIN 10° - 45° V
"OFF" RUNWAY
25° VERTICAL
MAIN BEAM ℄
350 10 30 50 70 90 110 130 150 170 190 ARBITRARY
100 120 140 160 180 200 220 240 260 280 TRUE ANGLE

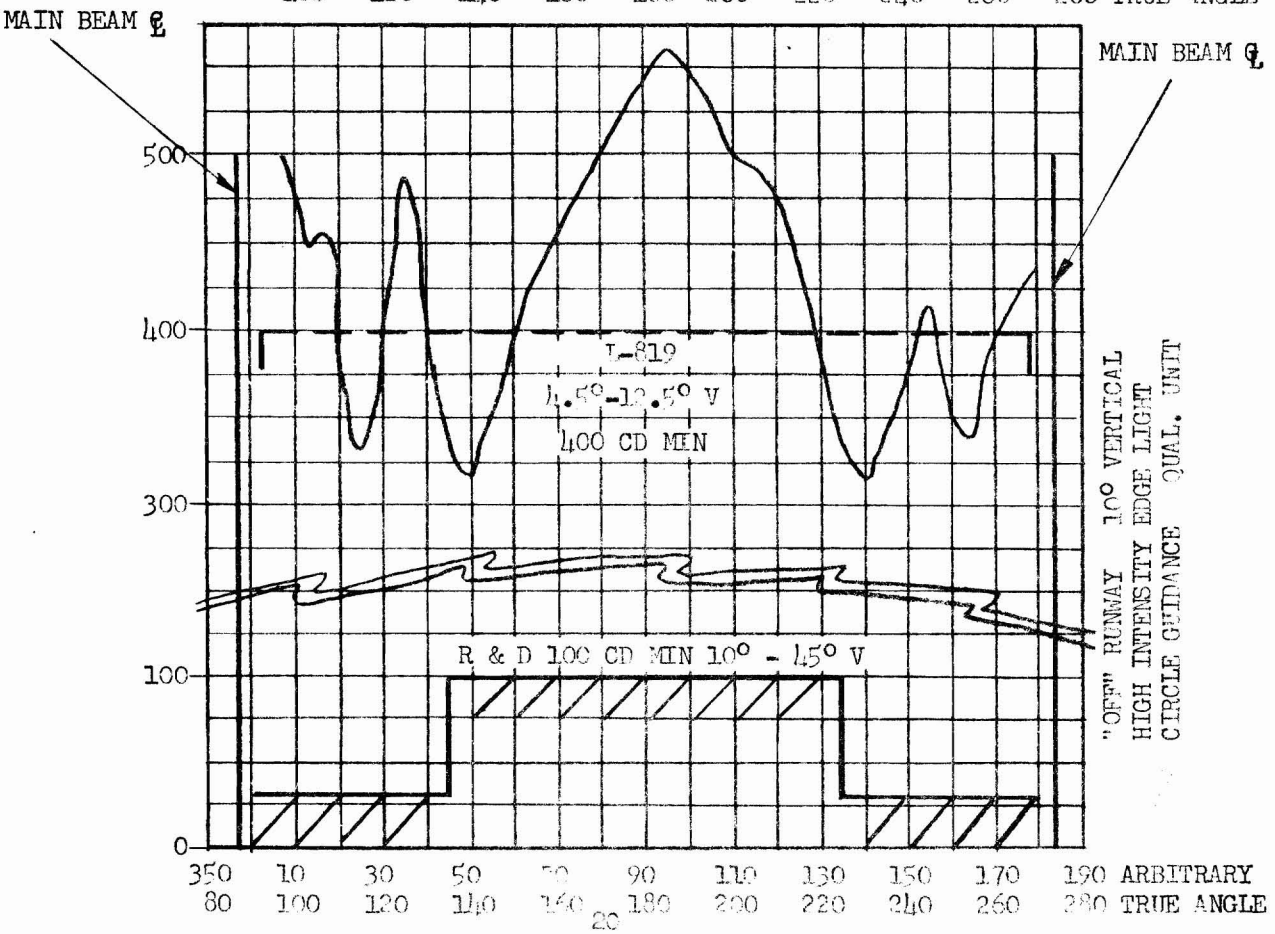
MAIN BEAM ℄
MAIN BEAM ℄
500
400
300
100
0
L-819
400 CD MIN
R & D 100 CD MIN 10° - 45° V
"OFF" RUNWAY 10° VERTICAL
HIGH INTENSITY EDGE LIGHT
CIRCLE GUIDANCE QUAL. UNIT
350 10 30 50 90 110 130 150 170 190 ARBITRARY
80 100 120 140 180 200 220 240 260 280 TRUE ANGLE

FIGURE 13

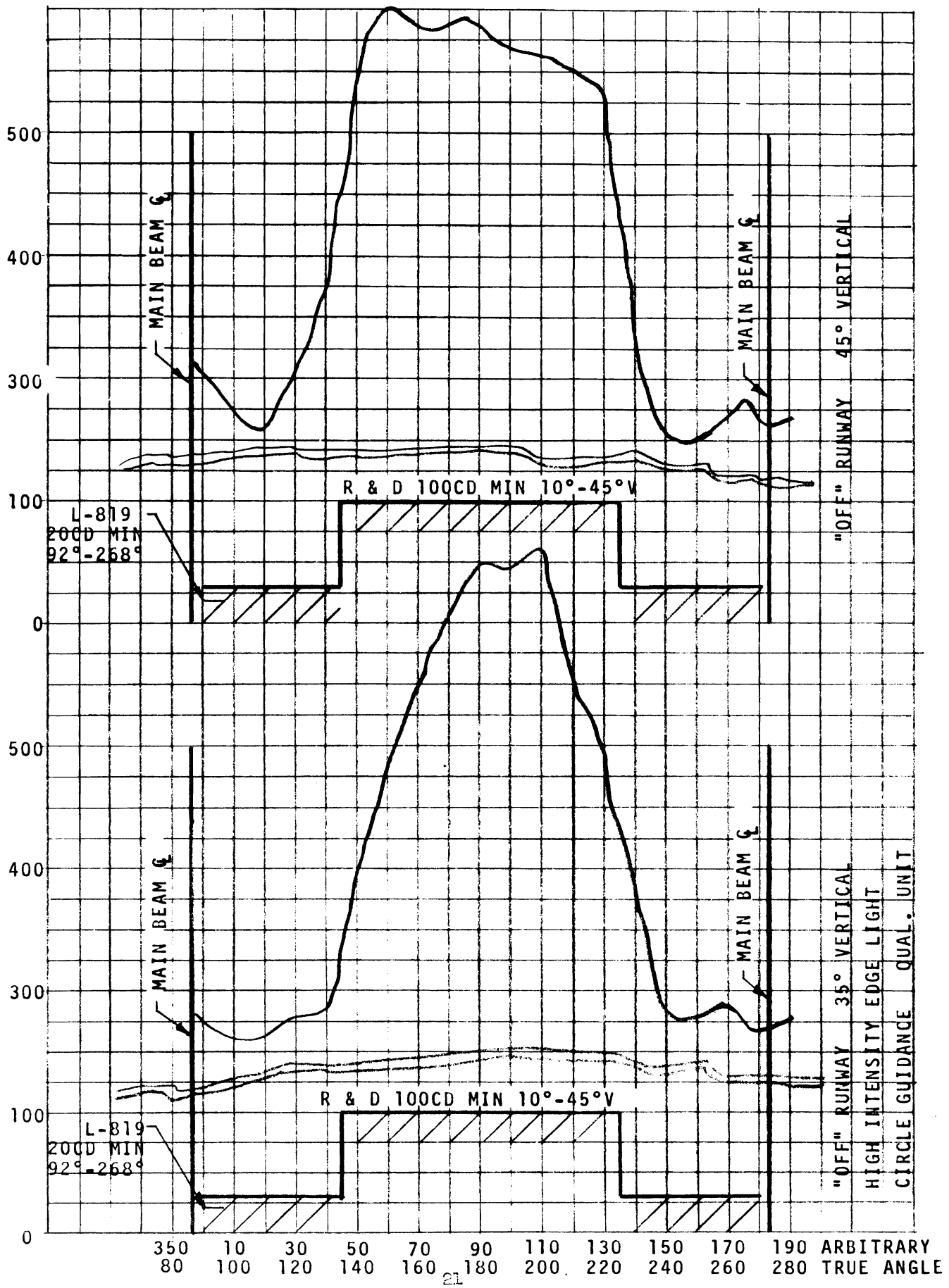
500
400
300
100
0
MAIN BEAM ℄
MAIN BEAM ℄
R & D 100CD MIN 10°-45°V
L-819
20CD MIN
92°-268°
"OFF" RUNWAY 45° VERTICAL
500
400
300
100
0
MAIN BEAM ℄
MAIN BEAM ℄
R & D 100CD MIN 10°-45°V
L-819
20CD MIN
92°-268°
"OFF" RUNWAY 35° VERTICAL
HIGH INTENSITY EDGE LIGHT
CIRCLE GUIDANCE QUAL. UNIT
350 10 30 50 70 90 110 130 150 170 190 ARBITRARY
80 100 120 140 160 180 200 220 240 260 280 TRUE ANGLE

FIGURE 14

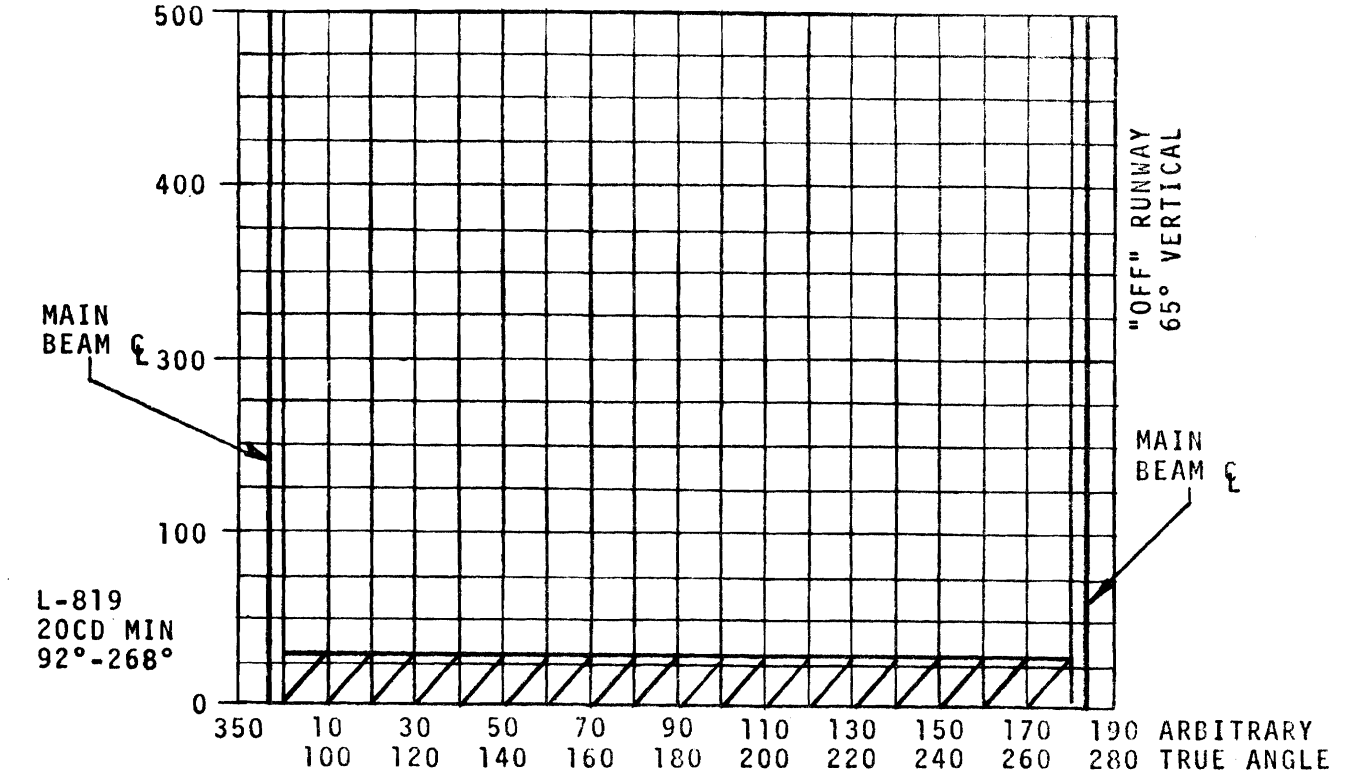
500
400
300
100
0
MAIN BEAM ℄
L-819
20CD MIN
92°-268°
"OFF" RUNWAY
65° VERTICAL
MAIN BEAM ℄
350 10 30 50 70 90 110 130 150 170 190 ARBITRARY
100 120 140 160 180 200 220 240 260 280 TRUE ANGLE

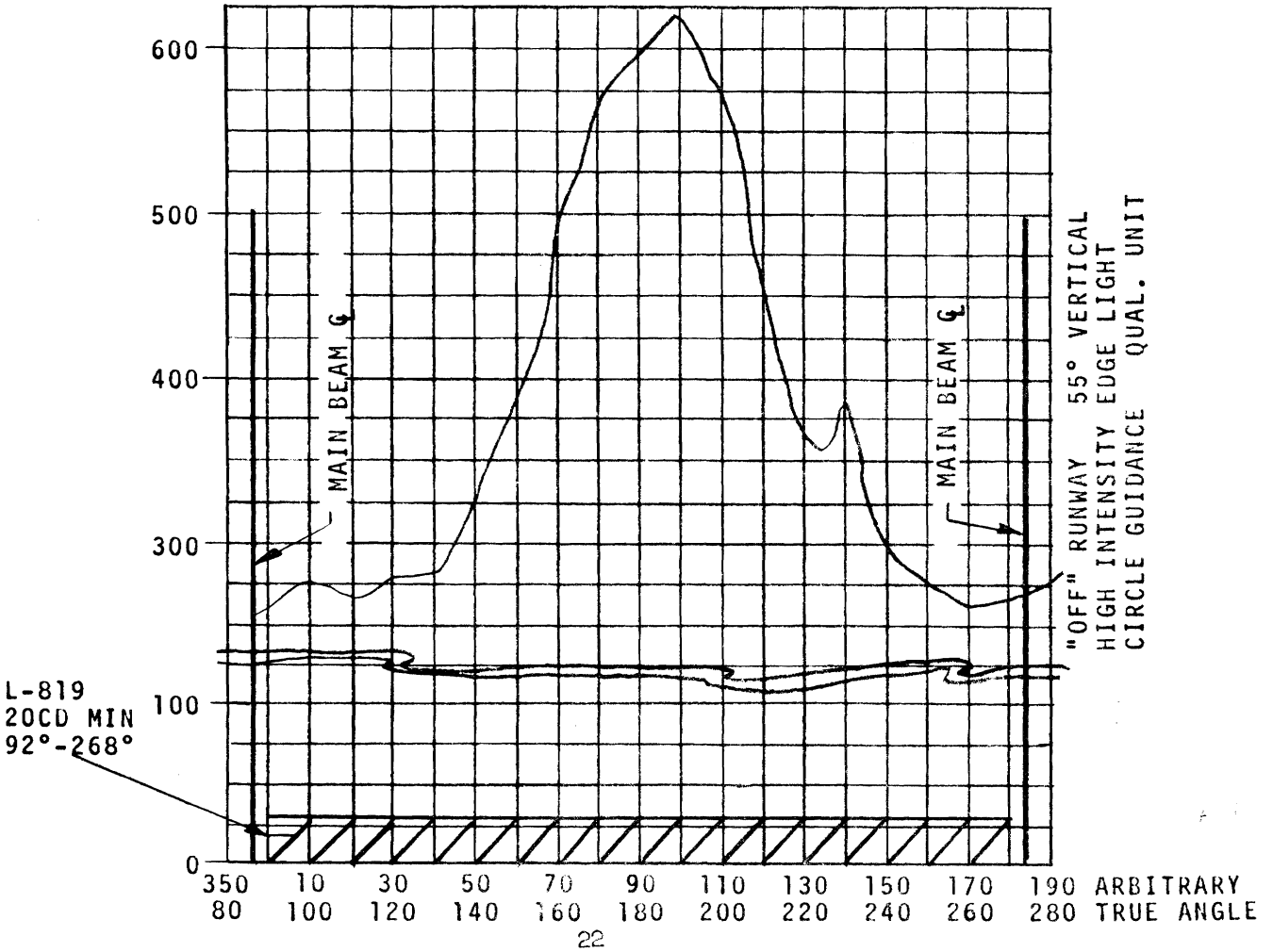
600
500
400
300
100
0
MAIN BEAM ℄
MAIN BEAM ℄
"OFF" RUNWAY 55° VERTICAL
HIGH INTENSITY EDGE LIGHT
CIRCLE GUIDANCE QUAL. UNIT
L-819
20CD MIN
92°-268°
350 10 30 50 70 90 110 130 150 170 190 ARBITRARY
80 100 120 140 160 180 200 220 240 260 280 TRUE ANGLE

FIGURE 15

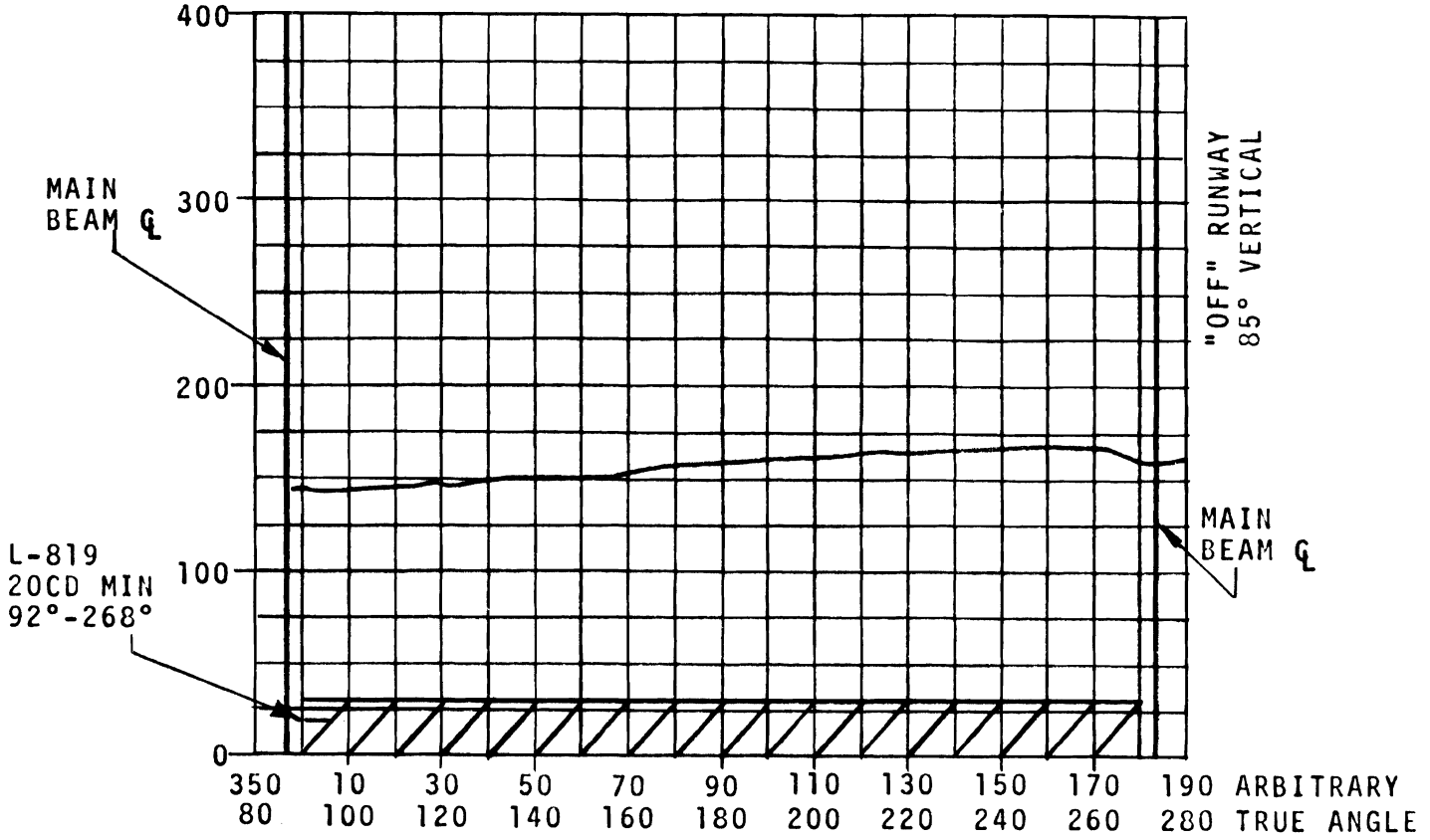
400
300
200
100
0
MAIN BEAM ℄
L-819
20CD MIN
92°-268°
"OFF" RUNWAY
85° VERTICAL
MAIN BEAM ℄
350 80
10 100
30 120
50 140
70 160
90 180
110 200
130 220
150 240
170 260
190 280
ARBITRARY TRUE ANGLE

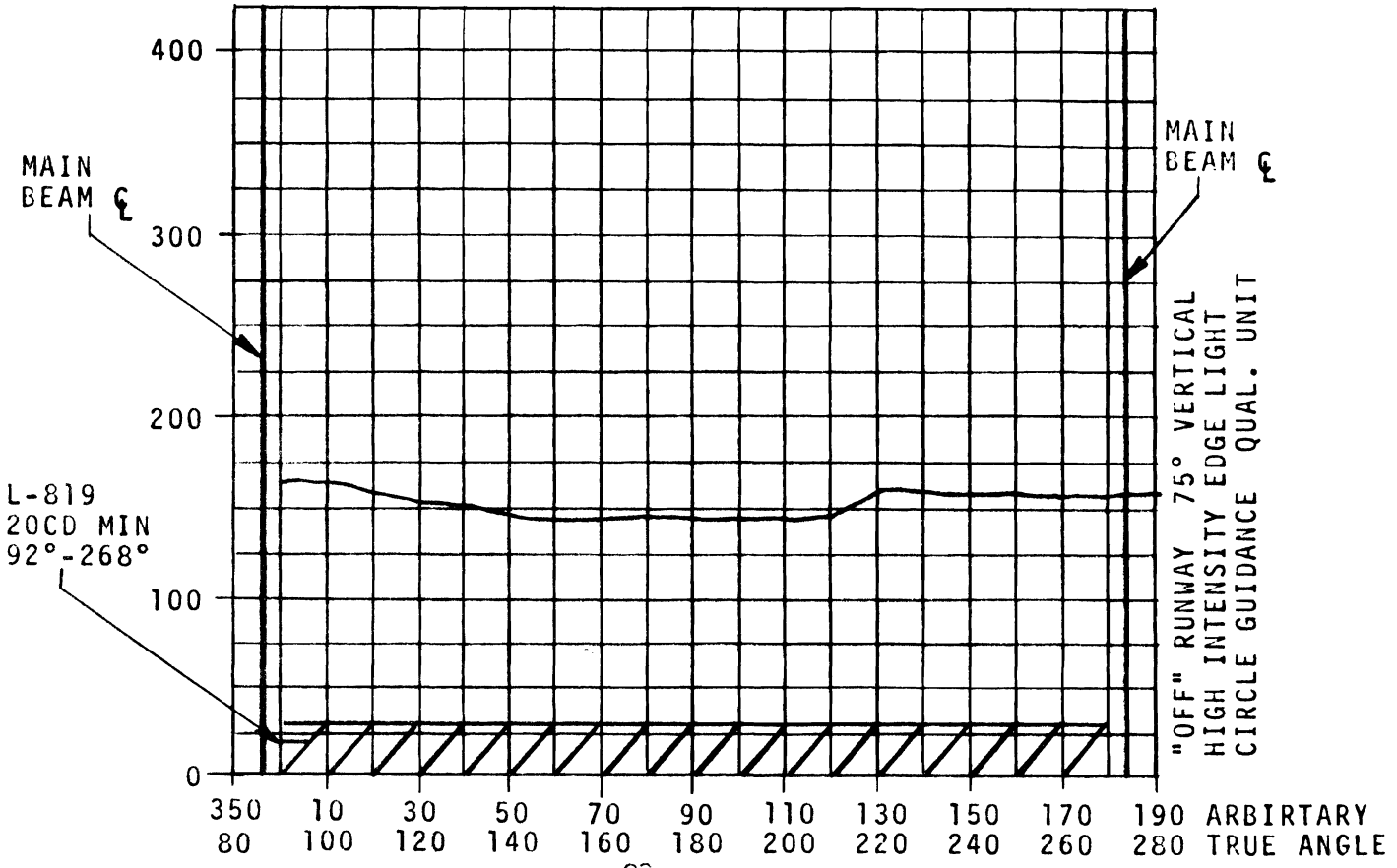
400
300
200
100
0
MAIN BEAM ℄
L-819
20CD MIN
92°-268°
MAIN BEAM ℄
"OFF" RUNWAY 75° VERTICAL
HIGH INTENSITY EDGE LIGHT
CIRCLE GUIDANCE QUAL. UNIT
350 80
10 100
30 120
50 140
70 160
90 180
110 200
130 220
150 240
170 260
190 280
ARBIRTARY TRUE ANGLE

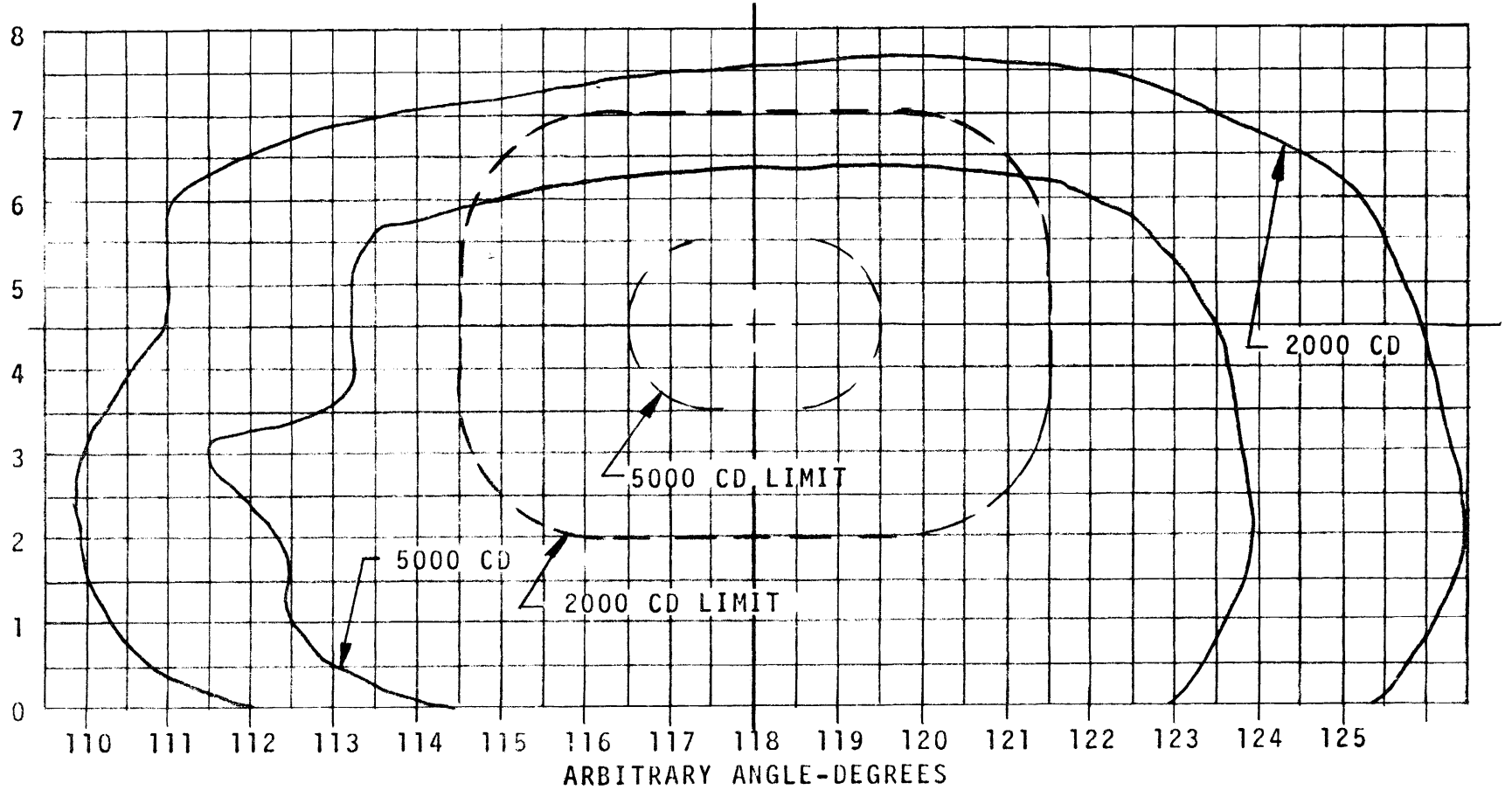

RELATIVE POSITION OF LIGHT
ON GONIOMETER UNCHANGED
BETWEEN SIDES A & B READINGS

AVERAGED BEAM CONTOUR
TO SECURE 3-1/2° TOE ℄

MEDIUM INTENSITY EDGE LIGHT
ELEVATED
100 WATT 2 PIN PRE-FOCUS
SIDE A
QUALIFICATION TEST

FIGURE 16

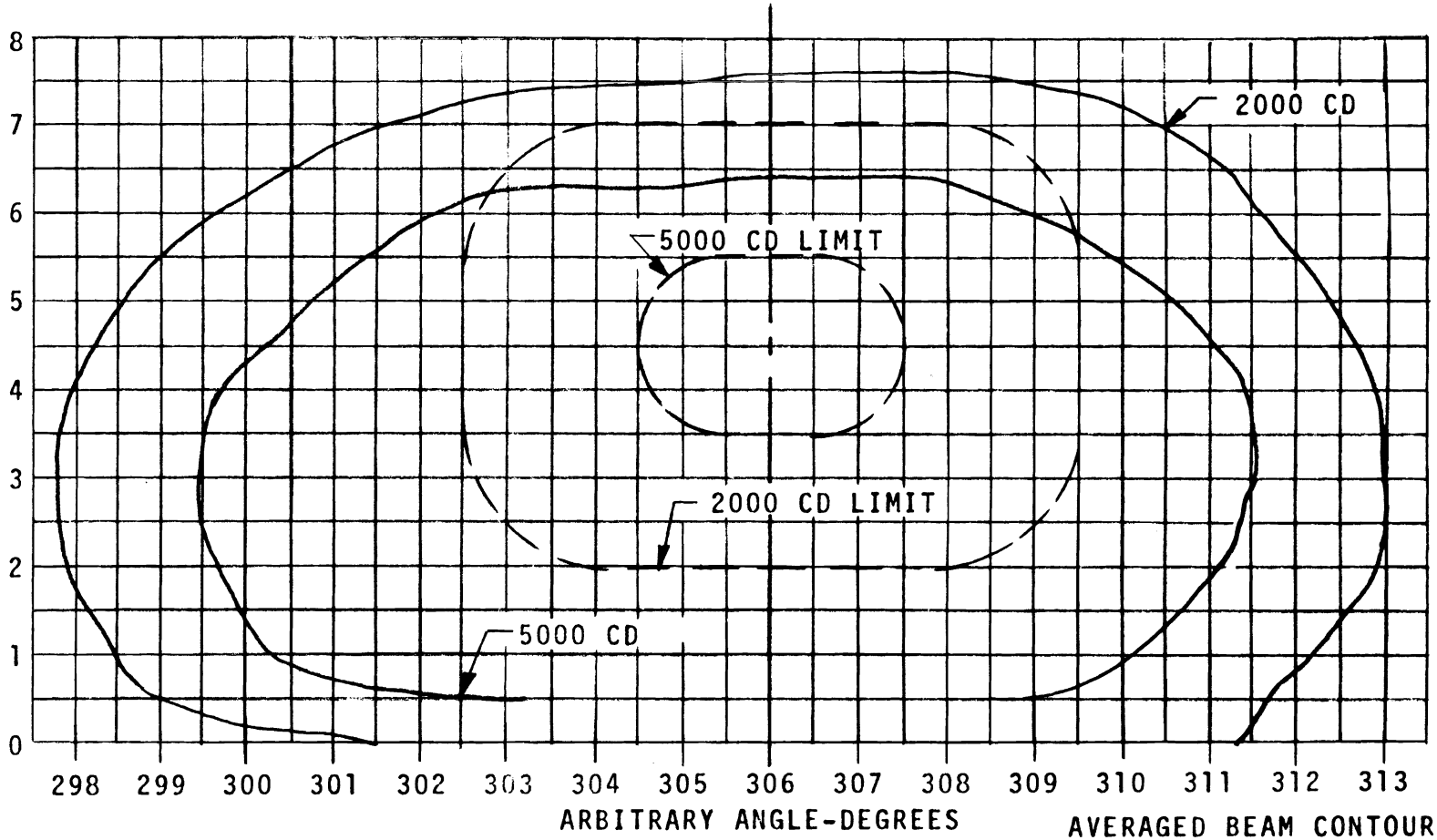

AVERAGED BEAM CONTOUR
TO SECURE 3-1/2° TOE ℄

RELATIVE POSITION OF LIGHT
ON GONIOMETER UNCHANGED
BETWEEN SIDES A & B READINGS

MEDIUM INTENSITY EDGE LIGHT
ELEVATED
100 WATT 2 PIN PRE-FOCUS
SIDE B

FIGURE 17

MEDIUM INTENSITY EDGELIGHT
QUAL. TEST UNIT
28 MARCH 73

"ON" RUNWAY
CIRCLE GUIDANCE

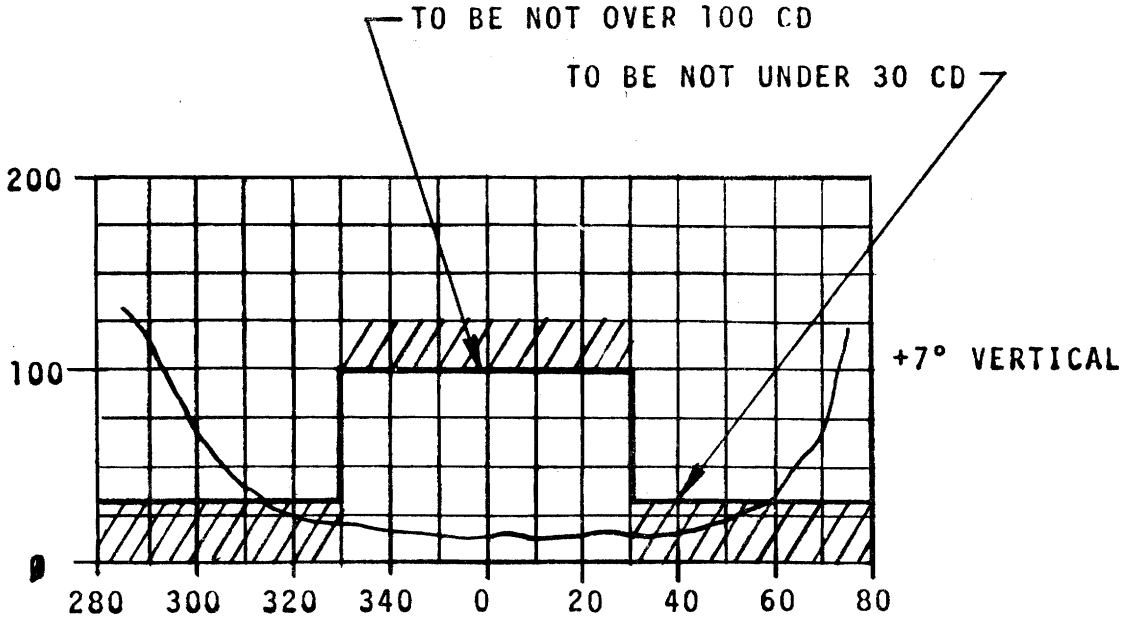

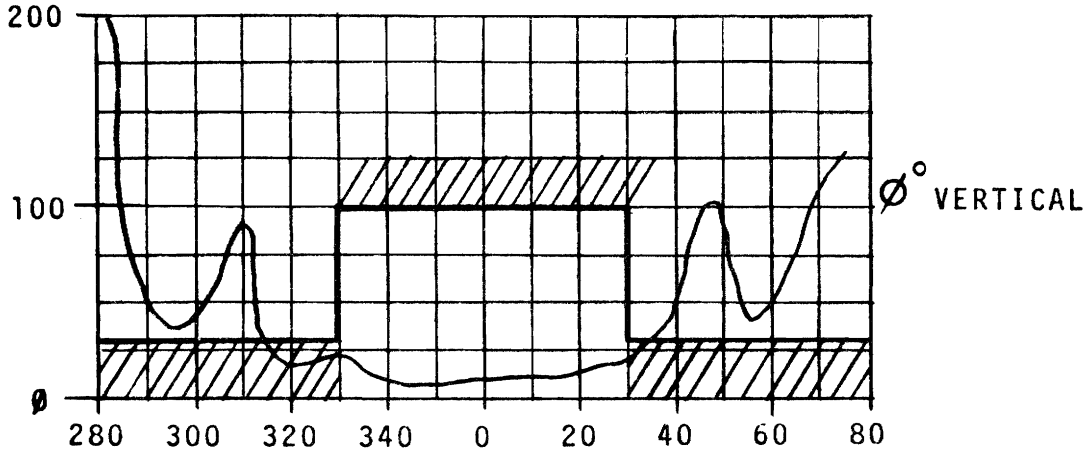

FIGURE 18

MEDIUM INTENSITY EDGELIGHT
"ON" RUNWAY
CIRCLE GUIDANCE

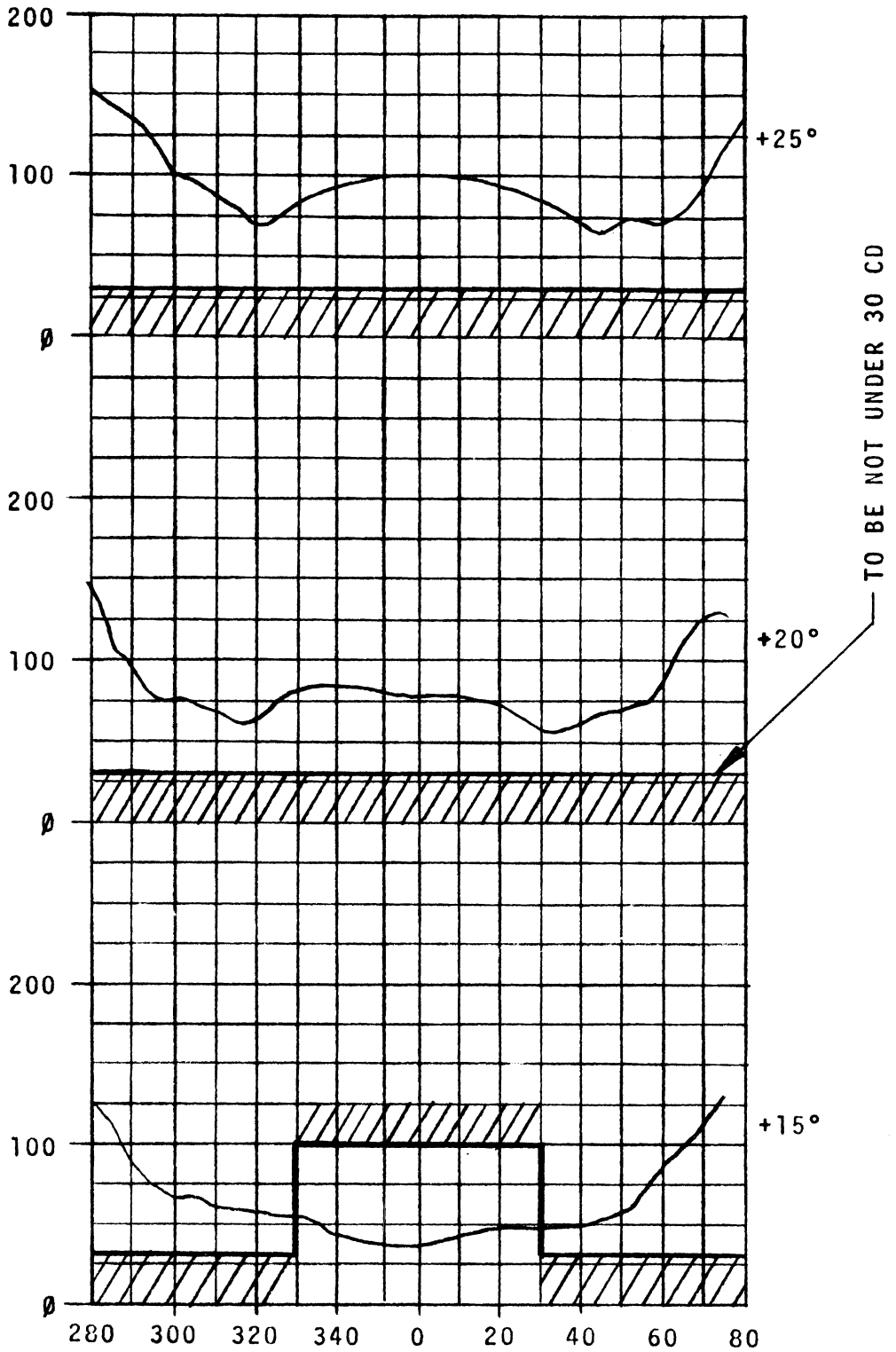

FIGURE 19

MEDIUM INTENSITY EDGELIGHT
"ON" RUNWAY

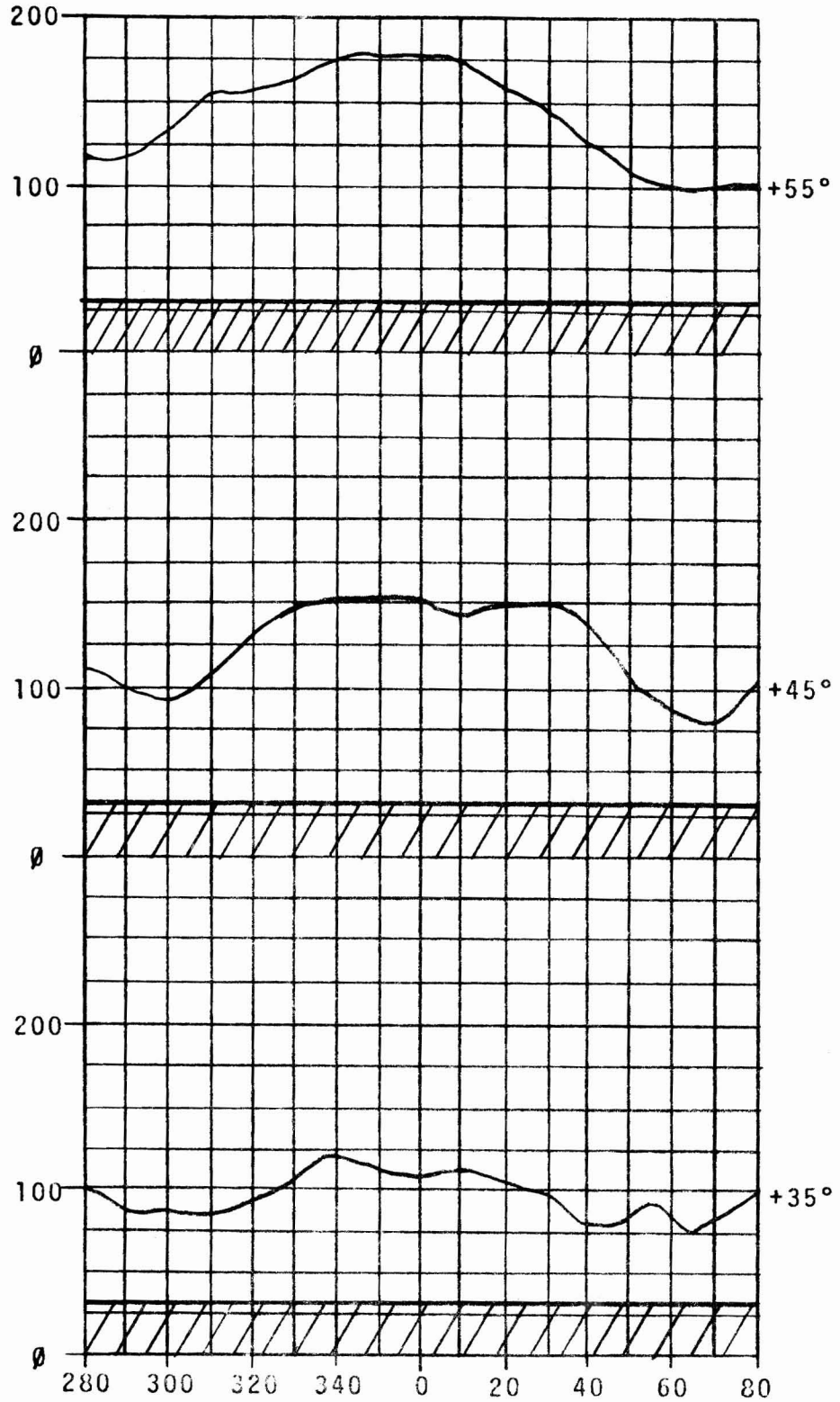

FIGURE 20

MEDIUM INTENSITY EDGELIGHT
"ON" RUNWAY
CIRCLE GUIDANCE

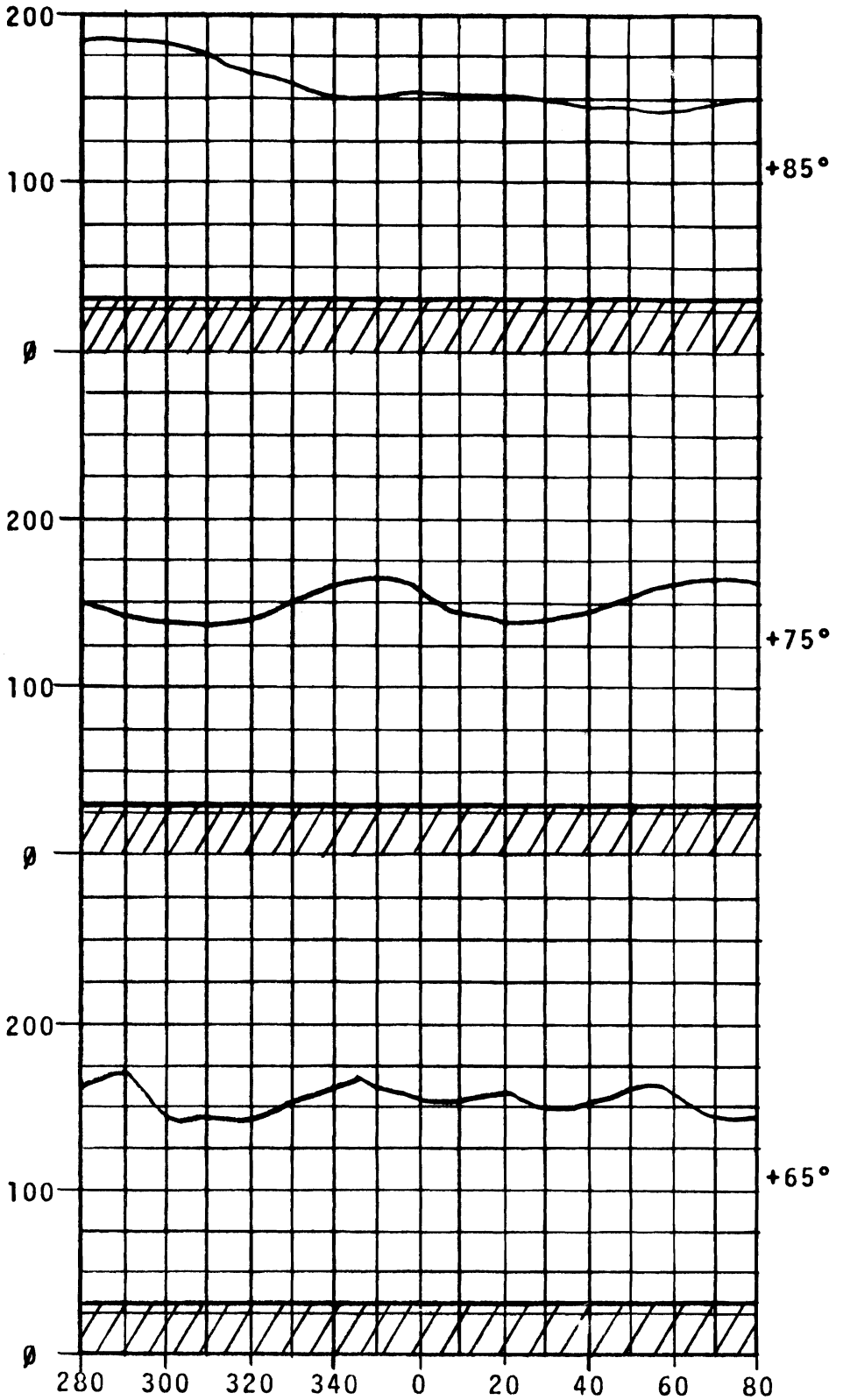

FIGURE 21

MEDIUM INTENSITY EDGELIGHT
QUAL. TEST UNIT
28 MARCH 73

"OFF" RUNWAY
CIRCLE GUIDANCE

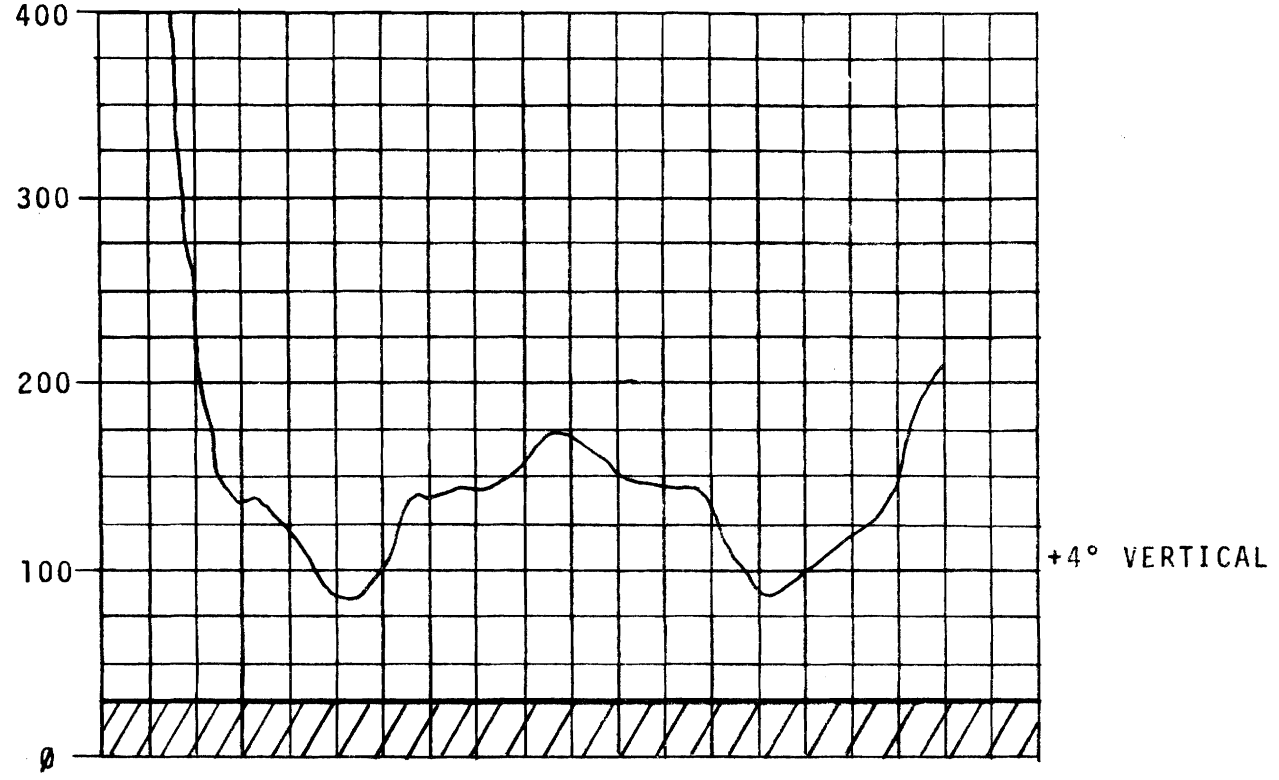

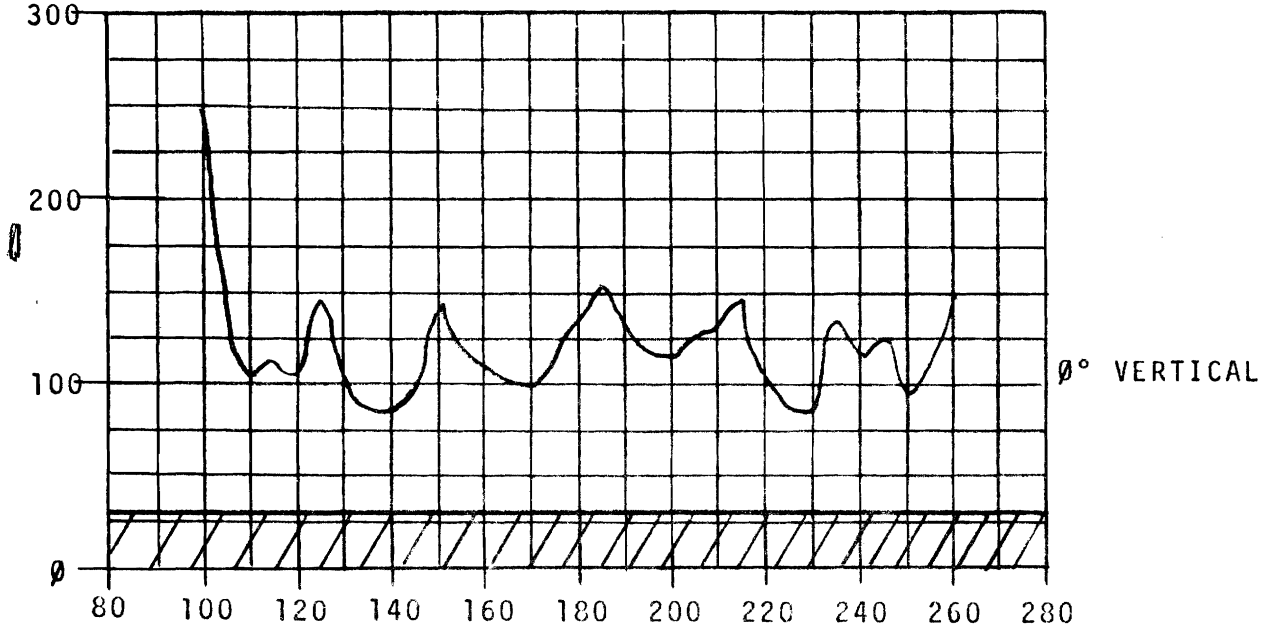

FIGURE 22

MEDIUM INTENSITY EDGELIGHT
"OFF" RUNWAY
CIRCLE GUIDANCE

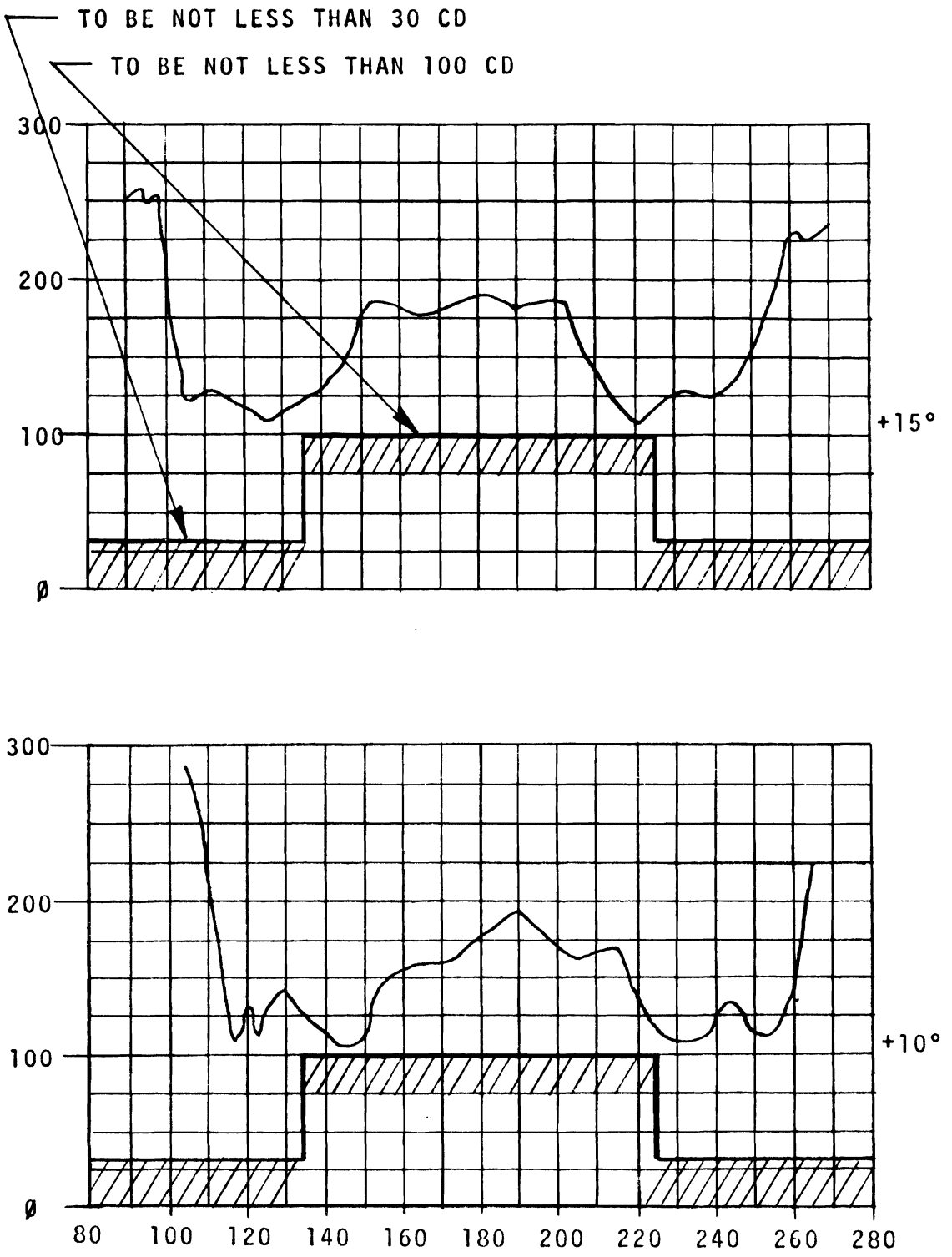

FIGURE 23

MEDIUM INTENSITY EDGELIGHT
"OFF" RUNWAY
CIRCLE GUIDANCE

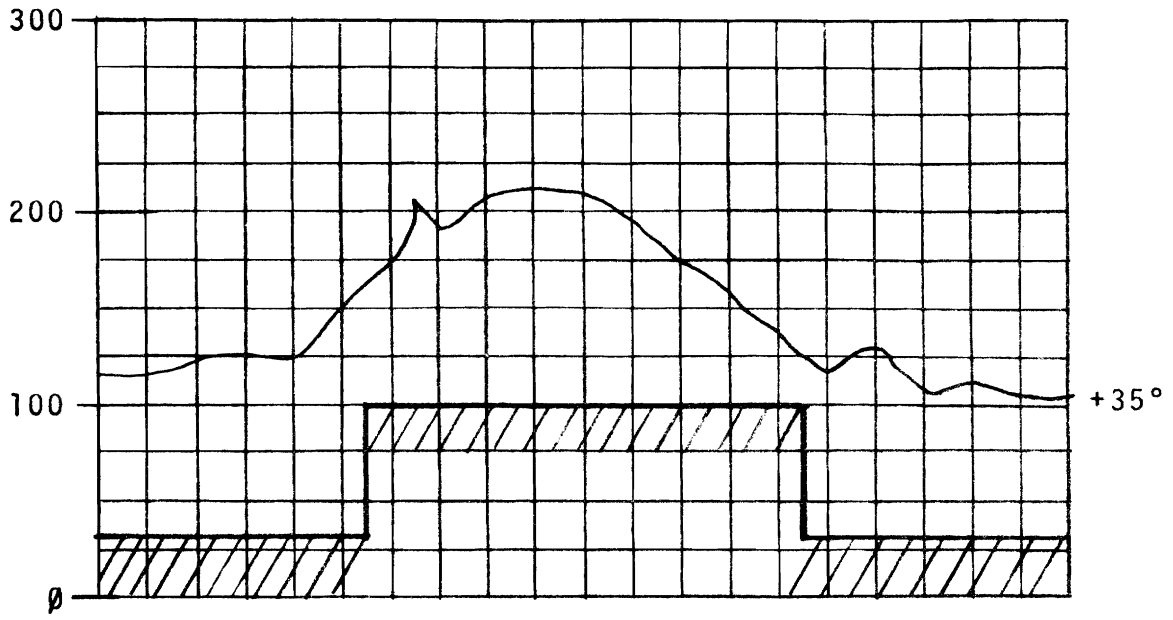

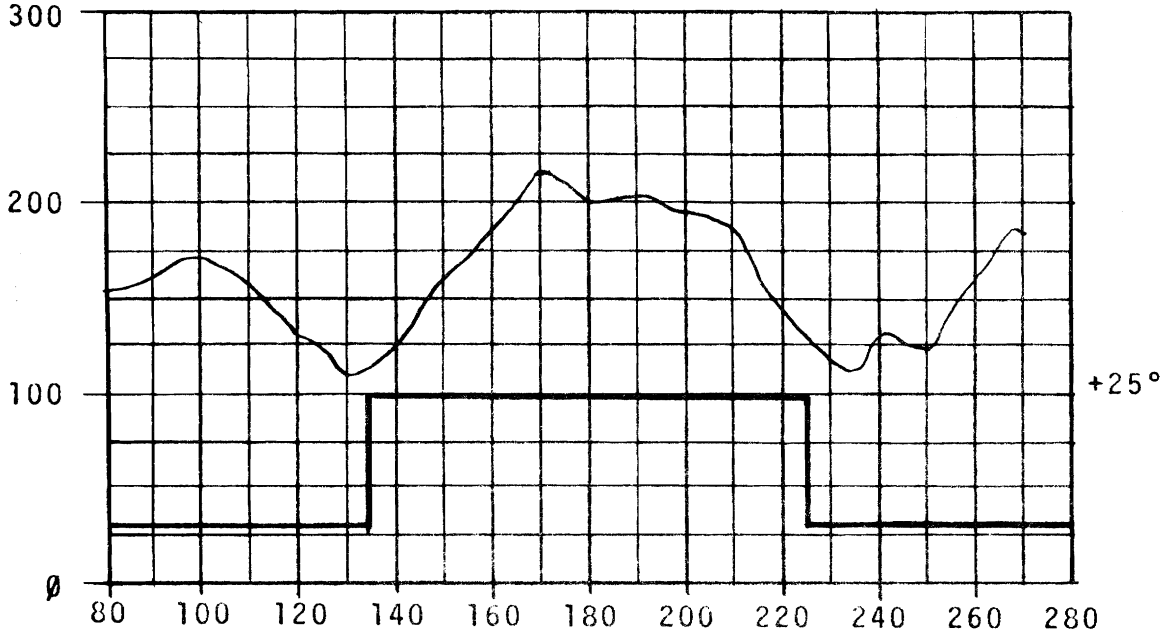

FIGURE 24

MEDIUM INTENSITY EDGELIGHT
"OFF" RUNWAY
CIRCLE GUIDANCE

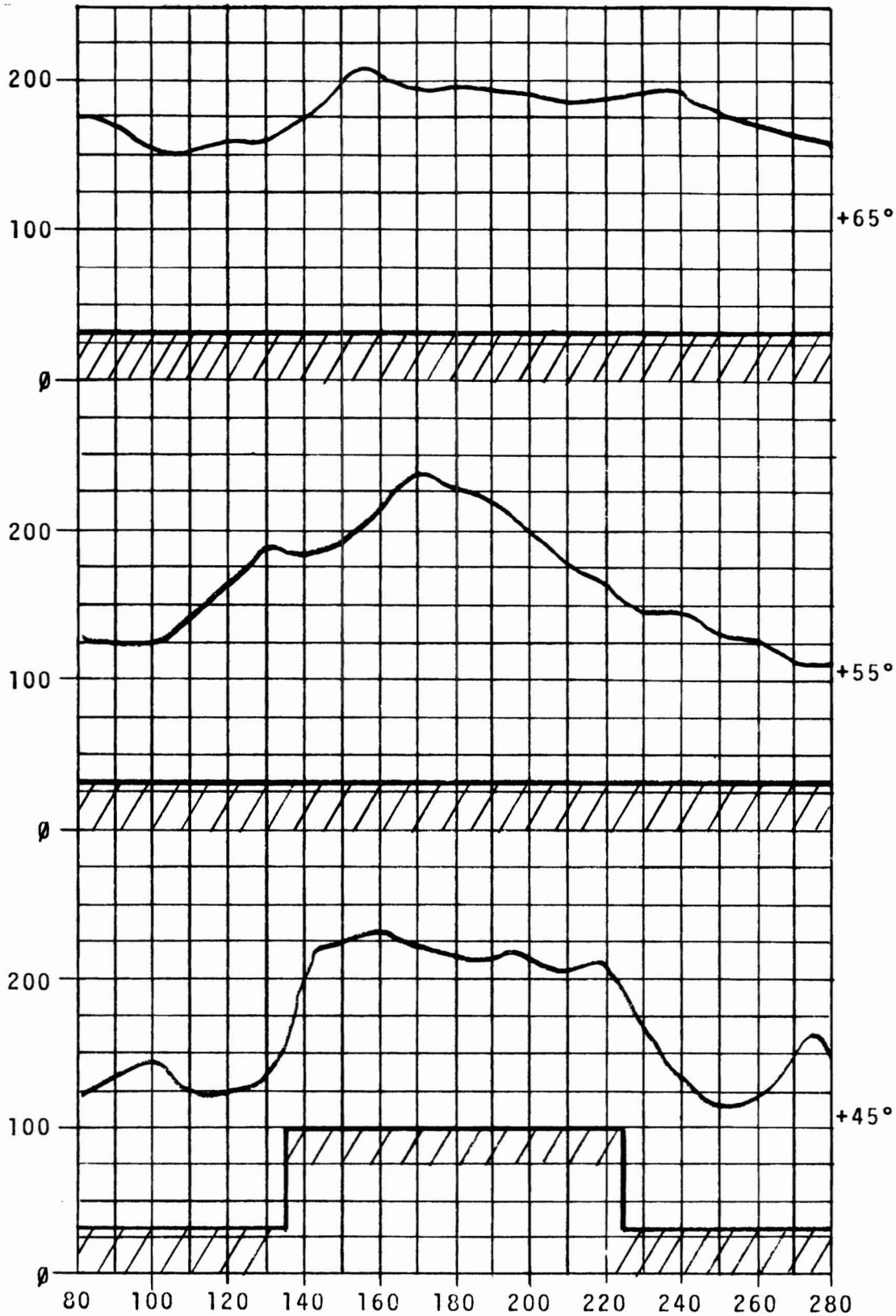

FIGURE 25

MEDIUM INTENSITY EDGELIGHT
"OFF" RUNWAY
CIRCLE GUIDANCE

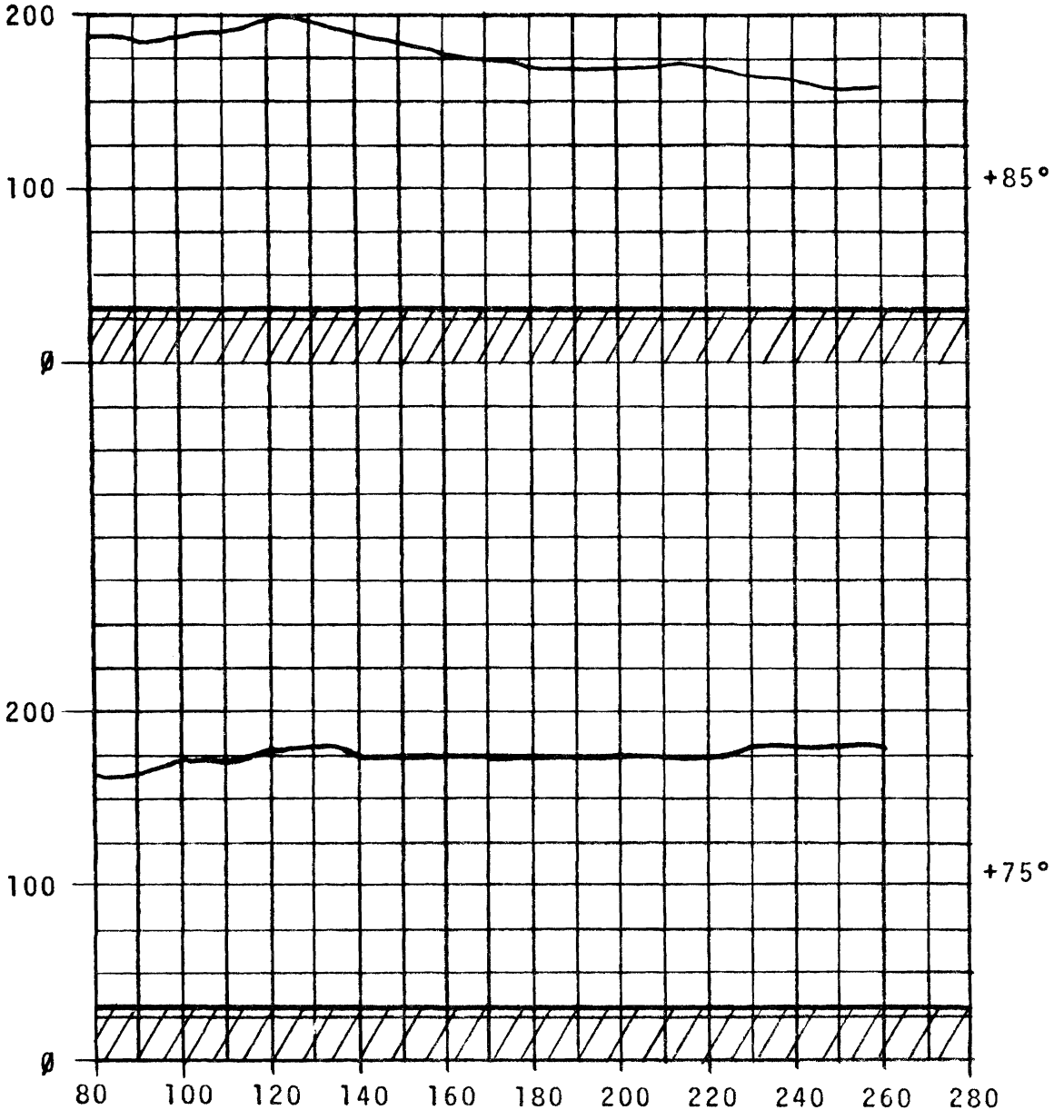

FIGURE 26

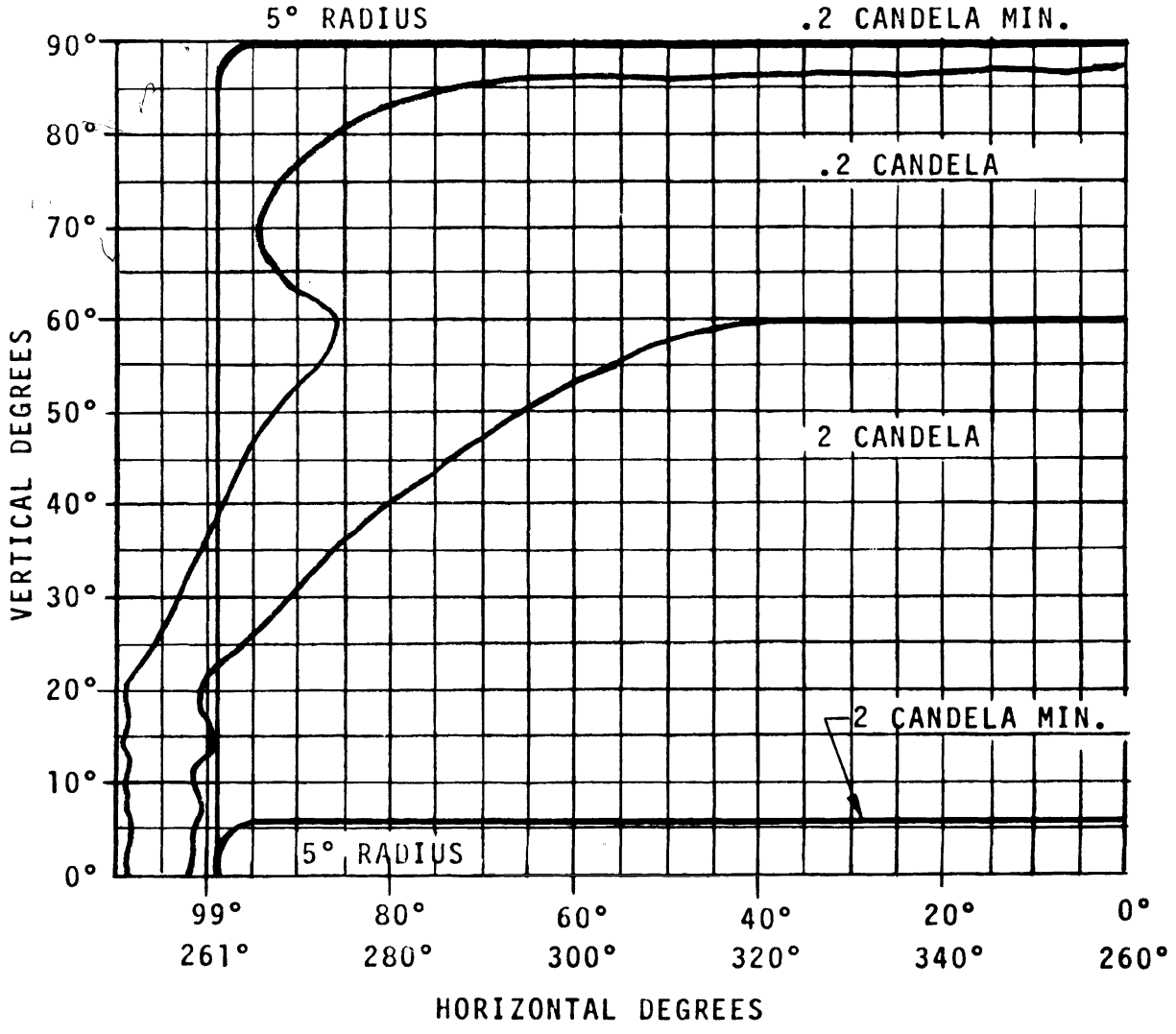

CLASS IV - ELEVATED TAXIWAY EDGELIGHT

FIGURE 27

TEST REPORT NO. Y-1308

DATE May 4, 1973

REPORT OF TEST ON

EDGELIGHTS

for

CONNECTICUT INTERNATIONAL CORPORATION
WINDSOR LOCKS, CONNECTICUT 06096

YORK RESEARCH CORPORATION
ONE RESEARCH DRIVE
STAMFORD, CONN. 06904

	PREPARED	CHECKED	APPROVED
BY	N. Woodbury	G.T. Ciccone	A.W. Bunce
SIGNED	N. Woodbury	G.T. Ciccone	A.W. Bunce
DATE	5-7-73	5-7-73	5-7-73

Administrative Data

1.0 Purpose of Test: To determine the ability of the test items to sustain the specified environmental conditions without evidence of physical damage on electrical malfunction.

2.0 Manufacturer: Connecticut International Corporation
Windsor Locks, Connecticut 06096

3.0 Manufacturer's Type or Model No.: See General Section

4.0 Drawing, Specification or Exhibit: Test Plan for Runway Edgelights 7214

5.0 Quantity of Items Tested: Four (4)

6.0 Security Classification of Items: Unclassified

7.0 Date Test Completed: April 25, 1973

8.0 Test Conducted By: **YORK RESEARCH CORPORATION**

9.0 Disposition of Specimens: Returned to client

10.0 Abstract: The test items successfully completed the specified environmental conditions to the extent indicated in the test results contained in this report.

DATE May 4, 1973

REPORT NO. Y-1308

PAGE 1 **OF** 9

LIST OF EQUIPMENT

ITEM	MANUFACTURER	MODEL NO.	CALIBRATION DATE	CALIBRATION DUE DATE
Vibration System	M.B. Electronics	C-126	2-19-73	6-19-73
Accelerometer	C.R.L.	302	11-22-72	5-22-73
Temperature/ Humidity Chamber	York Research Corp.	302	4-24-73	10-24-73
Salt Spray Chamber	Industrial Filter & Pump Co.	CA-1	1-5-73	7-5-73
A.C. Ampmeter	Simpson	370	4-9-73	10-9-73
A.C. Voltmeter	Weston	433	4-9-73	10-9-73
Multimeter	Simpson	270	1-5-73	7-5-73

GENERAL

APPLICABLE DOCUMENTS

Connecticut International Corp. Purchase Order Number 33007.
Test Plan for Runway Edgelights Number 7214 MIL-STD-810B.

ENVIRONMENTAL CONDITION

Condition	Specification 7214 Para. No.
Humidity Test	3.3
Salt Fog Test	3.4
Vibration Test	3.7

DESCRIPTION OF TEST ITEMS

Edgelight Assembly High Intensity Elevated P/N 40600.
Light Assembly - Elevated Taxiway P/N 40610.
Edgelight Assembly Medium Intensity Elevated P/N 40595.
Optical Assembly In-Pavement Edgelight P/N 20005.

The In-Pavement Edgelight, P/N 20005 was subjected to the Vibration Test, Humidity Test and Salt Fog Test. The other three (3) test items were subjected only to the Humidity Test and Salt Fog Test.

VIBRATION TEST

TEST PROCEDURE

The In-Pavement Edgelight, P/N 20005, was subjected to vibration in accordance with paragraph 3.7 of Connecticut International Corporation's Test Plan for Runway Edgelights Number 7214.

The light assembly was mounted securely to a test fixture in a horizontal position corresponding to its position in place on a runway. The test fixture was then securely fastened to the vibration table. The light assembly was subjected to vibration in three (3) direction's as follows.

1. In a direction perpendicular to the plane of the test table; i.e., vibrated vertically.

2. Vibrated horizontally in a direction parallel to the light axis; i.e., parallel to the line through the centers of the light channels.

3. Vibrated horizontally in a direction at right angles to the light axis; i.e., normal to the line through the centers of the light channels.

The test was to be conducted in two (2) parts, if required. In the initial test shunts were placed across the lamp terminals with the lamps in place, to determine whether continuity of the electrical circuit was maintained during the test. The light assembly was subjected to one (1) ten (10) minute sweep in each of the above direction's over a frequency range of 20 Hz to 2000 Hz at the following amplitudes.

Frequency	Amplitude
20 Hz to 500 Hz	5G
500 Hz to 2000 Hz	10G

Electrical continuity was continuously monitored throughout the test and upon completion of each direction of vibration the light assembly was visibly examined. If the lamp envelope and filament remained intact, the vibration test was considered complete. If the lamp envelope and/or filament fail, the second part of the test was to be initiated. In the second part of the test the shunt was removed from the lamp terminals, the damaged lamp was removed and a new lamp of the type specified for use in the light assembly was inserted in the lampholder. Without energizing the

lamp filament, the light assembly was again vibrated from 20 to 2000 Hz in a ten (10) minute period at an amplitude of 3G's continuity was continuously monitored.

TEST RESULTS

During the first and second axis of vibration there was no loss of continuity or any physical damage noted. Upon completion of the third axis, vibration applied horizontally in a direction at right angles to the light axis, it was noted that the filament in one (1) lamp had broken. The shunts were removed and both lamps were replaced and the light assembly was subjected to part two of the test (20 to 2000 Hz at 3G's). Upon completion of this second test there was no loss of continuity or evidence of physical damage and the filaments and envelopes of both lamps were intact.

HUMIDITY TEST

TEST PROCEDURE

All four (4) light assemblies were subjected to a humidity test in accordance with MIL-STD-810B, Method 507, procedure IV as modified by paragraph 3.3 of Test Plan for Runway Edgelight Number 7214.

The light assemblies were subjected to the temperature-humidity conditions in the order indicated below.

1. The light assemblies were placed in a test chamber and wired to an outside power source so that electrical operation could be performed during the test. Each light assembly was then energized with 6.6 amperes A.C. and voltage measurements were taken across each assembly and recorded.

2. The assemblies were then allowed to dry at a temperature of 45°C (113°F) for a period of two (2) hours.

3. The assemblies were then conditioned at a temperature of 25°F (77°F) and a relative humidity of 50% for twenty-four (24) hours.

4. Upon completion of step 3 and while the assemblies were still at the conditions indicated, initial measurements were taken. Each assembly was energized with 6.6 amperes and voltage measurements across each were taken and recorded.

5. The assemblies were then subjected to five (5) twenty-four (24) hour cycles of temperature humidity. A twenty-four (24) hour cycle consisted of sixteen (16) hours at 60°C (140°F) and approximately eight (8) hours at 30°C (86°F) (includes transition times). A relative humidity greater than 95% was maintained at both temperatures. Each transition time between 30°C and 60°C was 1 1/2 hours.

6. Upon completion of the fifth temperature-humidity cycle the assemblies were conditioned at 25°C (77°C) and 50% relative humidity for a period of twenty (20) hours.

7. While at the conditions of step 6 above voltage measurements were made and recorded as described previously in this report.

8. The light assemblies were removed from the test chamber and visually inspected for evidence of physical degradation.

TEST RESULTS

There was a slight amount of corrosion on the base of each of the three (3) elevated light assemblies. There was no evidence of corrosion on the in-pavement light assemblv and no evidence of physical damage on it or, aside from the small amount of corrosion, on the other three (3) assemblies. The voltage measurements taken during the test were as follows.

	Light Assembly Part Number	Voltage Recorded
Step 1.	40600	31.0 V.A.C.
	40610	6.8 V.A.C.
	40595	15.8 V.A.C.
	20005 (Fore)	30.2 V.A.C.
	(Aft)	30.2 V.A.C.
Step 4.	40600	31.0 V.A.C.
	40610	6.8 V.A.C.
	40595	15.8 V.A.C.
	20005 (Fore)	30.2 V.A.C.
	(Aft)	30.2 V.A.C.
Step 7.	40600	31.0 V.A.C.
	40610	6.8 V.A.C.
	40595	15.8 V.A.C
	20005 (Fore)	30.2 V.A.C
	(Aft)	30.2 V.A.C

SALT FOR TEST

TEST PROCEDURE

The light assemblies were subjected to a salt fog test in accordance with MIL-STD-810B, Method 509, Procedure I as modified by Test Plan for Runway Edgelights Number 7214.

Before the start of testing the light assemblies were energized with 6.6 amperes and voltage measurements taken and recorded.

The light assemblies were positioned within the chamber at an angle of approximately 15 degrees from the vertical such that corrosion products and condensate from one specimen would not fall upon another. The chamber was sealed and the chamber temperature was increased to +95°F. The chamber temperature was maintained at +95°F for a period of twenty-four (24) hours. During the twenty-four (24) hour period, the units were subjected to the specified salt spray fog.

The salt spray fog was produced using a 5% salt solution prepared by dissolving 5 parts by weight of sodium chloride in 95 parts by weight of distilled water. The sodium chloride contained on the dry basis, not more than 0.1% of sodium iodide and not more than 0.3% of total impurities. The solution was adjusted to and maintained at a specific gravity between 1.126 and 1.157 and at a pH value between 6.5 and 7.2 when measured at a temperature of +95°F.

Following the twenty-four (24) hour exposure period, the light assemblies were removed from the chamber. The exterior surfaces were washed with tap water and they were allowed to dry at ambient conditions. They were then examined for evidence of physical damage and were energized at 6.6 amperes and voltage measurements were again taken and recorded.

TEST RESULTS

There was no evidence of physical damage sustained by the assemblies as a result of this test. The voltage measurements taken before and after the test were as follows.

	Light Assembly Part Number	Voltage Recorded
Before	40600	31.0 V.A.C.
	40610	6.8 V.A.C.
	40595	15.8 V.A.C.
	20005 (Fore)	30.2 V.A.C.
	(Aft)	30.2 V.A.C.
After	40600	31.0 V.A.C.
	40610	6.8 V.A.C.
	40595	15.8 V.A.C.
	20005 (Fore)	30.2 V.A.C.
	(Aft)	30.2 V.A.C.

GPO 881-148