Copy 1

Report No. FAA-RD-74-68

FAA WJH Technical Center
00090169

NA-73-36

INVESTIGATION OF THE REFLECTED RADAR-BEACON REPLY PROBLEM AT THE NORTH PLATTE, NEBRASKA, EN ROUTE RADAR SITE

George F. Spingler

APRIL 1974

INTERIM REPORT

Document is available to the public through the National Technical Information Service, Springfield, Virginia 22151

Prepared for

DEPARTMENT OF TRANSPORTATION
FEDERAL AVIATION ADMINISTRATION
Systems Research & Development Service
Washington D. C. 20590

NOTICE

This document is disseminated under the sponsorship of the Department of Transportation in the interest of information exchange. The United States Government assumes no liability for its contents or use thereof.

Technical Report Documentation Page

1. Report No. FAA-RD-74-68	2. Government Accession No.	3. Recipient's Catalog No.
4. Title and Subtitle INVESTIGATION OF THE REFLECTED RADAR-BEACON REPLY PROBLEM AT THE NORTH PLATTE, NEBRASKA, EN ROUTE RADAR SITE		5. Report Date April 1974
		6. Performing Organization Code
7. Author(s) George F. Spingler		8. Performing Organization Report No. FAA-NA-73-36
9. Performing Organization Name and Address Federal Aviation Administration National Aviation Facilities Experimental Center Atlantic City, New Jersey 08405		10. Work Unit No. (TRAIS)
		11. Contract or Grant No. 031-241-020
12. Sponsoring Agency Name and Address Department of Transportaion Federal Aviation Administration Systems Research and Development Service Washington, D.C. 20590		13. Type of Report and Period Covered Interim June 1972 - December 1972
		14. Sponsoring Agency Code
15. Supplementary Notes		

16. Abstract

The National Aviation Facilities Experimental Center (NAFEC) conducted an investigation, at the request of the Central Region, at the North Platte, Nebraska, En Route Radar Site and the Denver, Colorado, Air Route Traffic Control Center to determine the cause of a split radar-beacon reply problem that existed in the system. It was concluded from this investigation that the terrain in the vicinity of the North Platte facility together with the radar beacon directional antenna that was installed at the facility were responsible for the split radar-beacon reply problem. An improved radar beacon directional antenna, that utilized the ARSR-2 radar reflector, was designed, fabricated and tested at NAFEC to reduce radar beacon radiations below the horizon. This antenna was afterward installed and tested at the North Platte facility. The results of the testing at the North Platte facility showed that the new antenna design had eliminated the split radar-beacon reply problem. From the results of the testing at North Platte, it was concluded that this antenna could be used at other en route radar facilities to eliminate existing propagation problems.

17. Key Words Radar Beacon Antenna Modification Integral Radar/Beacon Antenna ARSR-2 Antenna Modification IFF Antenna Modification	18. Distribution Statement Document is available to the public through the National Technical Information Service, Springfield, Virginia 22151

19. Security Classif. (of this report) Unclassified	20. Security Classif. (of this page) Unclassified	21. No. of Pages 69	22. Price

Form DOT F 1700.7 (8-72) Reproduction of completed page authorized

PREFACE

An acknowledgement is extended to Messrs. Charles F. Winter and Paul Rawlinson of the Raytheon Company in Wayland, Massachusetts, for their assistance by supplying centerline curvature measurements for the ARSR-2 antenna reflector and their assurance in the feasibility of the antenna modification.

The author wishes to thank the Central and Rocky Mountain Regions for their much needed assistance; particularly Richard A. Cox, and Jack Condon.

Acknowledgements are also made to the following NAFEC personnel: Jules E. Blazej for his assistance in conducting the tests of the NADIF antenna, John N. Warren for his assistance in the calculation of theoretical antenna patterns, Stanley L Scull and Joseph H. Reed for their assistance in the installation and testing of the NADIF antenna, and the members of the NAFEC Metal Shop for the fabrication of the NADIF antenna.

TABLE OF CONTENTS

	Page
INTRODUCTION	1
Purpose	1
Background	1
Description of Equipment	3
DISCUSSION	8
Description of Problem	8
Design of the NADIF Antenna Assembly	14
Calculation of NADIF Antenna Assembly Radiation Patterns from Theory	15
NAFEC TESTS	22
General	22
Laboratory Tests	22
NAFEC Flight Tests	25
Results of the NAFEC Flight Tests	28
NORTH PLATTE TESTS	38
Antenna Installation and Checkout at North Platte	38
North Platte Flight Test	45
Results of the North Platte Flight Tests	47
Summary of North Platte Flight Test Results	56
ADDITIONAL NADIF ANTENNA TESTS	57
Common Digitizer Tests	57
Radar Feed-Through Tests	58
CONCLUSIONS	59
RECOMMENDATIONS	60
APPENDIX	
A Central Region Letter Expressing Satisfaction Concerning the NADIF Antenna Installation at North Platte	

LIST OF ILLUSTRATIONS

Figure		Page
1	North Platte, Nebraska, En Route Radar Site	2
2	NADIF Antenna Assembly as Installed at North Platte Radar Facility	4
3	Block Diagram Showing Transformation Characteristics of Coaxial Hybrid and Examples of How Phase Shifter Can Be Used to Adjust Amplitudes	6
4	Power Divider Network Block Diagram Showing Signal Flow Paths for Transmitting (1030 MHz) and Receiving (1090 MHz) Signals	7
5	Power Divider Network Showing Physical Layout (Front and Rear Views)	9
6	Terrain in the Vicinity of the North Platte Facility Looking Southeastward	10
7	North Platte Display Showing Nine Terrain-Reflected Replies Caused by the Broad Vertical Pattern of the Standard Beacon Directional Antenna	12
8	Vertical Radiation Pattern of the Standard ATCBI, Type FA-7202 Antenna	13
9	Mechanical Layout of the Dipole Antennas and Reflecting Plate Used with the NADIF Antenna Assembly	16
10	Calculations Used to Develop the Primary Feed Antenna Configurations for the ARSR-2 Antenna Modifications	18
11	Calculations Used to Develop the Secondary Vertical Radiation Pattern for the ARSR-2 Antenna Modifications	19
12	Vertical Radiation Patterns for 1030 MHz and 1090 MHz Calculated from Theory	21
13	Coaxial Matching Device Designed to Match Two Dipole Antennas to a Single 50-Ohm Impedance Source	23
14	Improved Coaxial Matching Device Developed by NAFEC After North Platte Tests Were Completed	24
15	Jet Aircraft, Convair 880M, Used for NAFEC Flight Tests	27

LIST OF ILLUSTRATIONS (continued)

Figure		Page
16	NAFEC Flight Test Data Using Standard Directional Antenna, Type FA-7202	29
17	NAFEC Flight Test Data Using the CPN-18 Dipole Feed Assembly Mounted Above the Radar Feed Horn	31
18	NAFEC Flight Test Data Using the CPN-18 Dipole Feed Assembly Mounted Below the Radar Feed Horn	32
19	NAFEC Flight Test Data Using the NADIF Antenna Assembly Modification with 27-Inch Vertical Separation	33
20	NAFEC Flight Test Data Using the NADIF Antenna Assembly Modification with 22-Inch Vertical Separation and a 90° Phase Delay	35
21	NAFEC Flight Test Data Using the NADIF Antenna Assembly Modification with 22-Inch Vertical Separation, Unequal Power at 1030 MHz and 1090 MHz, and a 60° Phase Delay	36
22	NAFEC Flight Test Data Using the NADIF Antenna Assembly Modification with 22-Inch Vertical Separation, Equal Power at 1030 MHz and 1090 MHz, and a 60° Phase Delay	37
23	NAFEC Flight Test Data Using the NADIF Antenna Assembly Modification with 22-Inch Vertical Separation, Equal Power at 1030 MHz and 1090 MHz, and a 45° Phase Delay	39
24	NAFEC Flight Test Data Using a Single Pair of Dipole Antennas Mounted Below the Radar Feed Horn	40
25	Low-Altitude Flight Test Routes Flown on December 20, 1972	48
26	North Platte System Video with the NADIF Antenna Assembly Modification Installed	51
27	Coverage Limits Measured During the Low-Altitude Flight Tests at North Platte	53
28	Coverage Limits Measured During the High-Altitude Flight Tests at North Platte	54

LIST OF TABLES

Table		Page
1	Summary of Radar Beacon Antenna Configurations Flight Tested at NAFEC	41
2	Summary of Outer Coverage Limits of the North Platte System on the 268° Radial	55

INTRODUCTION

PURPOSE.

The purpose of this effort was (1) to investigate terrain-reflected radar beacon reply problems at the North Platte, Nebraska, ARSR-2 En Route Radar Site, (2) to develop a modification to minimize or eliminate the problem, and (3) to install and evaluate the modification at the North Platte facility.

BACKGROUND.

The North Platte, Nebraska, En Route Radar Site (figure 1) was commissioned in June 1962. The display system that was installed at the Denver Center in Longmont, Colorado, at the time of commissioning was a U.S. Navy VG Plan Position Indicator (PPI) display. This type of display consisted of a small PPI oscilloscope and a system of mirrors and magnifying lenses that were used to enlarge the presentation for viewing by an air traffic controller. The resulting display was so distorted and blurred that it was difficult to extract finely detailed information about each beacon reply.

When the Radar Bright Display Equipment (RBDE) was commissioned at the Denver Center in April 1963, it became apparent from an examination of this improved PPI display system that some of the radar beacon replies on the North Platte system were being elongated. In fact, the beacon reply from a single aircraft, at certain site ranges and azimuths, actually consisted of two distinct replies separated by 2° to 8°.

Correspondence from the Denver Center to the Central Region requested that an investigation be conducted at the North Platte radar site to determine the cause of the abnormal beacon replies. As a result of these early investigations, it was concluded that the radar beacon antenna was the cause of the problem, and a replacement antenna was ordered. The new antenna was installed and flight tested in February 1964 but the problem still persisted.

Three unsatisfactory condition reports (UCR's) were submitted between January 1968 and September 1970 concerning the North Platte reflected beacon reply problem. As a result of these reports, a beacon dipole antenna assembly, type CPN-18, was obtained from the Southwest Region and installed in November 1970 at the North Platte radar site. The CPN-18 antenna assembly utilized the ARSR-2 radar antenna reflector to form the radar beacon antenna beam in lieu of using the standard Air Traffic Control Beacon Interrogation (ATCBI) Antenna. The CPN-18 antenna assembly was mounted on the antenna boom above the radar feed horn and flight tests were conducted with the CPN-18 antenna assembly in this position. The flight tests resulted in a

FIGURE 1. NORTH PLATTE, NEBRASKA, EN ROUTE RADAR SITE

recommendation from the Denver Center that the CPN-18 antenna assembly modification not be adopted. The reasons given for the rejection were contained in a letter from R. D. Coty to the Chief of the Denver Center, dated July 22, 1971. They were the following:

1. "A large cone of silence over the antenna site of approximately 10-mile radius is unacceptable for control purposes, and

2. The split beacon problem moved from the Hill City area to an area east and west of the antenna site. Experiments in power settings failed to eliminate the split beacons".

In April 1972, a fourth UCR was submitted on the reflected beacon replies that were displayed at the Denver Center by the North Platte radar site equipment. As a result of this UCR the Central Region requested that the National Aviation Facilities Experimental Center (NAFEC) participate in the investigation of the North Platte En Route Site reflected beacon reply problem. The NAFEC investigation commenced in June 1972 with a visit to the North Platte radar site and the Denver Center. The conclusions reached from this visit were that the terrain in the vicinity of the North Platte radar site was responsible for the reflected beacon replies, and that an antenna system was needed which would not illuminate this terrain.

An antenna system was designed at NAFEC to feed the ARSR-2 antenna reflector and was installed at the Elwood, New Jersey, Experimental En Route Radar Site. This antenna system was flight tested using NAFEC aircraft. Because of the favorable results of these flight tests, the antenna system was removed from the Elwood facility and installed on the North Platte, Nebraska, ARSR-2 antenna in November 1972. Flight tests were conducted at the North Platte facility in December 1972 using high- and low-altitude Flight Inspection aircraft. The results of these flight tests are documented herein along with information pertaining to site modifications performed by NAFEC to eliminate the terrain-reflected beacon reply problem.

DESCRIPTION OF EQUIPMENT.

The NAFEC Dipole Feed (NADIF) antenna assembly that was designed to feed the ARSR-2 antenna reflector at the North Platte, Nebraska, En Route Radar Site was a completely passive device (figure 2). The NADIF antenna assembly consisted of two pairs of half-wavelength dipole antennas and a power divider network. One pair of dipole antennas was mounted above the radar feed horn, while another pair of dipole antennas was mounted below the radar feed horn. The power divider network was mounted on the side of the radar antenna boom and consisted of two coaxial hybrids (Narda Model No. 3032), two ferrite circulators (Western Microwave Laboratories, Inc., Model No. 3J-2008), and two coaxial phase shifters (Narda Model No. 3752).

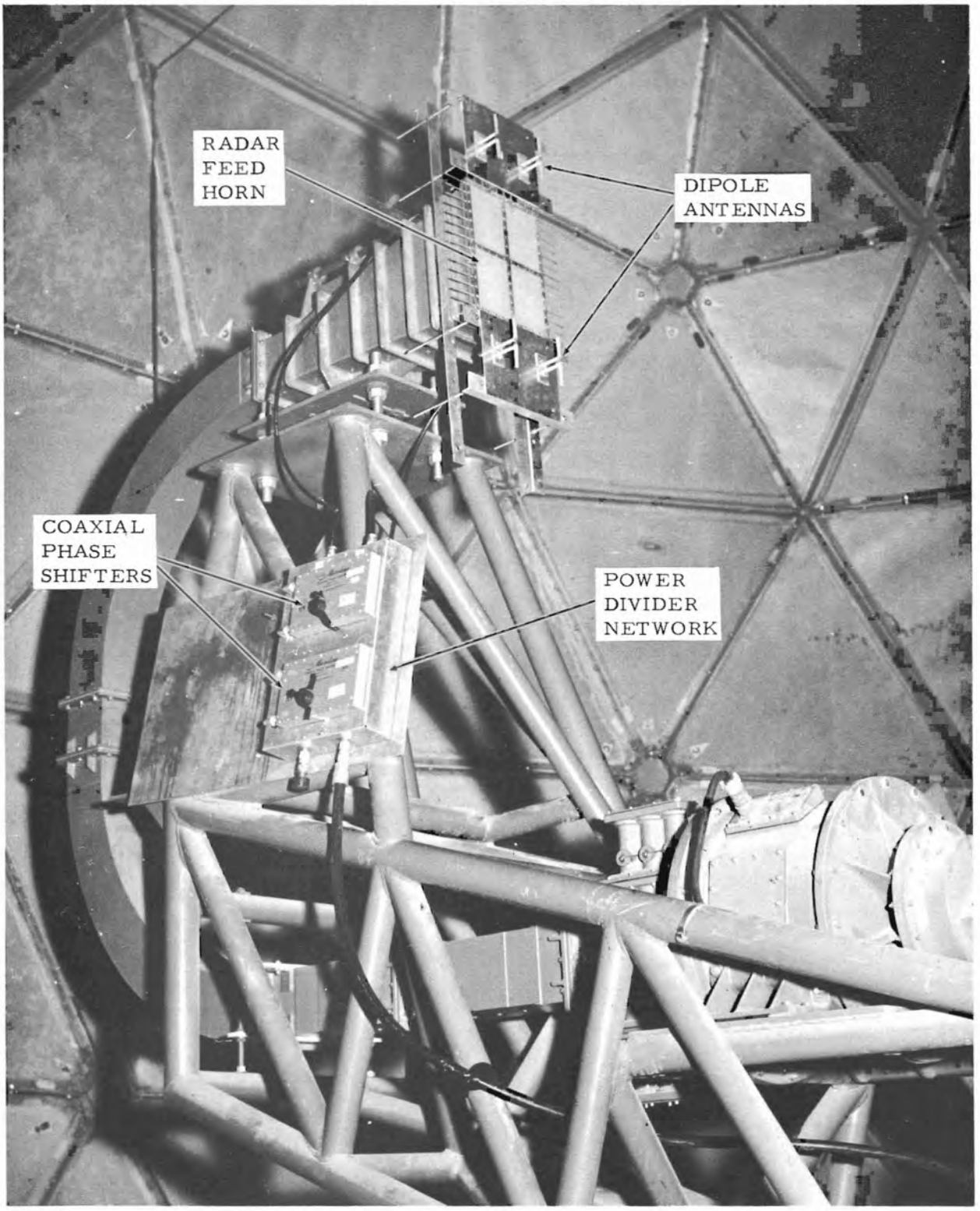

FIGURE 2. NADIF ANTENNA ASSEMBLY AS INSTALLED AT NORTH PLATTE RADAR FACILITY

The dipole antennas of the NADIF antenna assembly were designed so that the centers of the dipole antennas were horizontally separated by 6 inches and vertically separated by 22 inches (figure 2). Each pair of dipole antennas had its own matching device which provided equal excitation to both dipole antennas of the pair. The difference in excitation between the upper pair of dipole antennas and the lower pair of dipole antennas was controlled by the phase shifter settings of the power divider network.

Even though the coaxial phase shifters of the power divider network were used to control phase or signal path length, this change in phase or signal path length resulted in changing the excitation levels that were fed to the upper and lower pairs of dipole antennas. By altering the phase of the signals that were combined in the output coaxial hybrid, the excitation levels fed to the upper and lower pairs of dipole antennas could be varied over a wide dynamic range.

Figure 3 (a) shows typical 3-dB coaxial hybrids similar to the input and output devices used in the power divider network. When a signal is inserted in one port of a coaxial hybrid and extracted from the port directly opposite, the signal is attenuated by 3 dB but is not shifted in phase. When a signal is inserted in one port of a coaxial hybrid and extracted from the port diagonally opposite, the signal is attenuated 3 dB and delayed in phase by 90°. A 50-ohm load is shown in figure 3 connected to the unused port of the coaxial hybrid. The 50-ohm load is installed to absorb any signals that would be reflected by the circuitry connected to the active ports.

Figures 3 (b) and 3 (c) show block diagrams with a coaxial phase shifter inserted between two coaxial hybrids. In figure 3 (b), the coaxial phase shifter is adjusted for zero degrees of phase delay. This results in all of the excitation ($1\underline{/-90}$) being fed to the upper port of the output coaxial hybrid. The reason for this is that the two voltages being combined at the upper port of the output coaxial hybrid are in-phase while the two voltages being combined at the lower port of the output coaxial hybrid are 180° out-of-phase.

When the coaxial phase shifter is adjusted for 180° phase delay as in figure 3 (c), all of the excitation ($1\underline{/-180}$) is fed to the lower port of output coaxial hybrid. Once again, the two voltages are 180° out-of-phase at the output port of the coaxial hybrid that has zero output.

The upper and lower ports of the output coaxial hybrid in figures 3 (b) and 3 (c) should be considered as feeding the upper and lower pairs of dipole antennas of the antenna assembly, respectively. By varying the coaxial phase shifter from zero degrees to 180° of phase delay, any combination of excitations, from all on one pair of dipole antennas to all on the other pair of dipole antennas, could be obtained.

In reality, the power divider network that was installed at North Platte contained two coaxial phase shifters; one for 1030 MHz and the other for 1090 MHz (figure 4). Since the coaxial phase shifter was nothing more

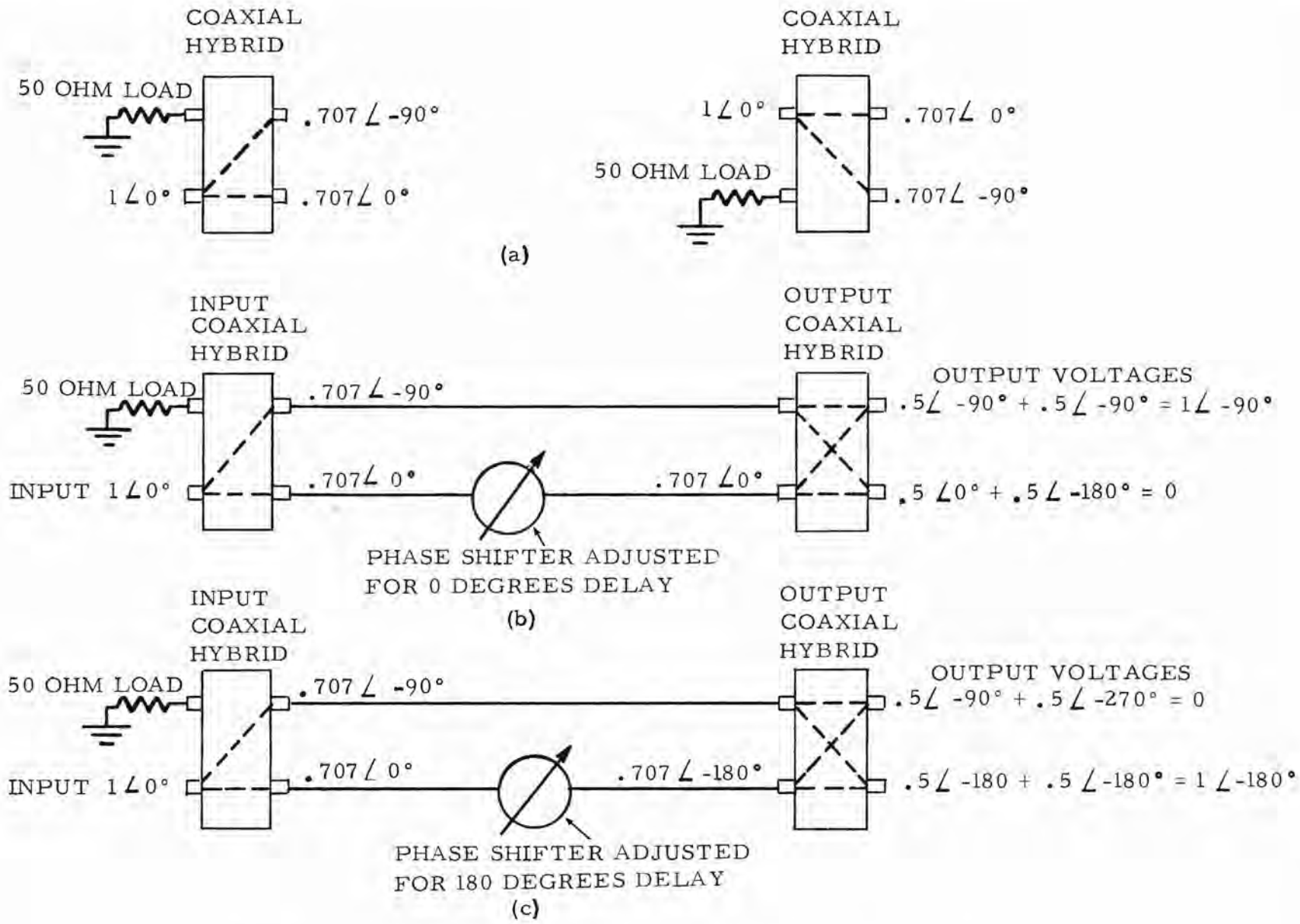

FIGURE 3. BLOCK DIAGRAM SHOWING TRANSFORMATION CHARACTERISTICS OF COAXIAL HYBRID AND EXAMPLES OF HOW PHASE SHIFTER CAN BE USED TO ADJUST AMPLITUDES

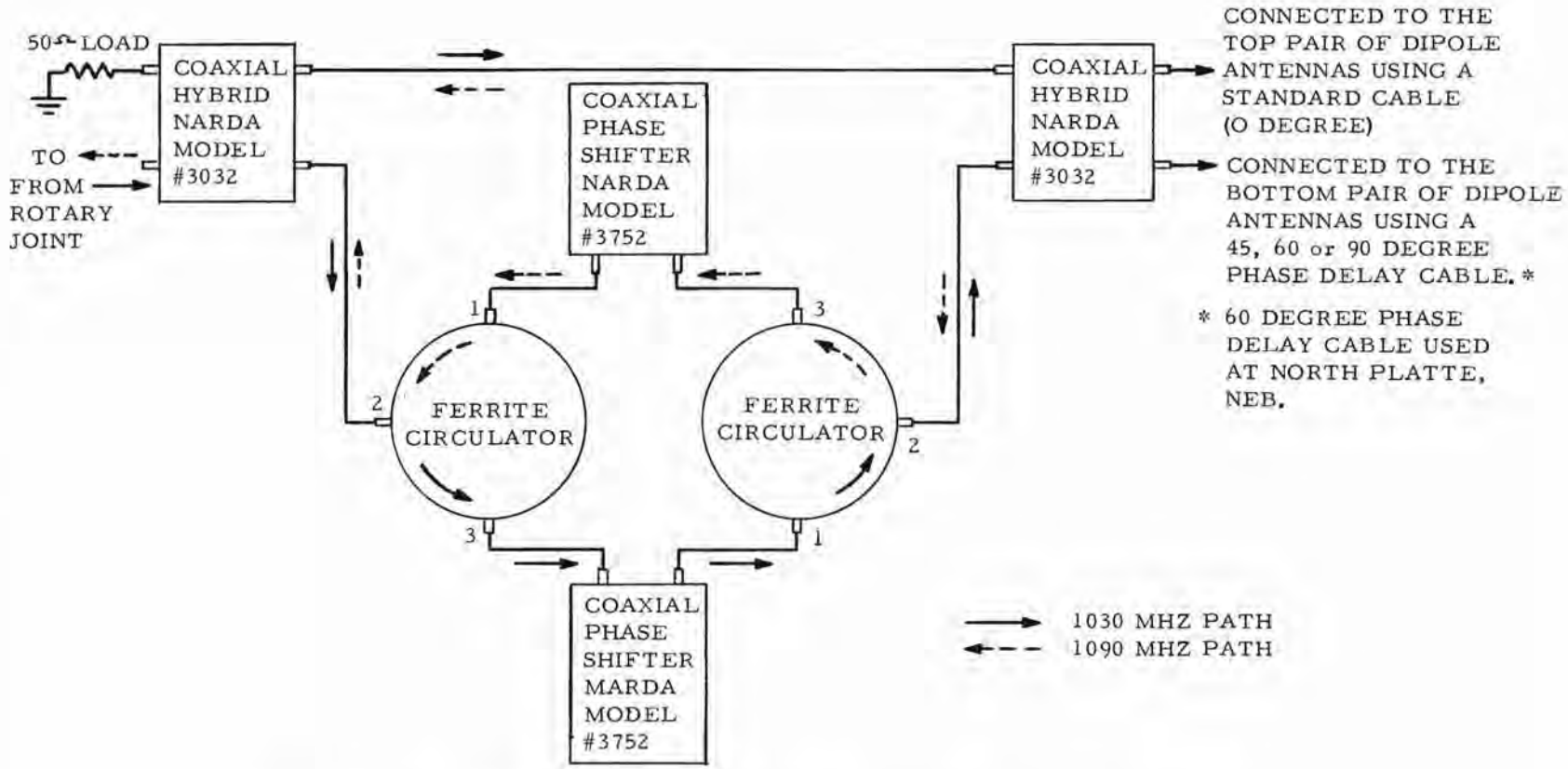

FIGURE 4. POWER DIVIDER NETWORK BLOCK DIAGRAM SHOWING SIGNAL FLOW PATHS FOR TRANSMITTING (1030 MHz) AND RECEIVING (1090 MHz) SIGNALS

than a precision length of variable line, frequency affected the amount of phase delay produced by the coaxial phase shifter. Therefore, the phase delay would be different for each frequency if a single coaxial phase shifter were used. In order to be able to independently adjust both the transmitting path (1030 MHz) and the receiving path (1090 MHz), the two paths were separated by using ferrite circulators. In this manner, one coaxial phase shifter could be adjusted to optimize the transmitting path and the other adjusted to optimize the receiving path.

The power divider network that was installed at North Platte (figure 5) was an experimental model, and the proper phase delay for the coaxial phase shifters had to be determined experimentally. It is anticipated that in future installations, once the correct phase delay is determined experimentally, the coaxial phase shifters could be removed, and a precisely cut length of coaxial cable that has the same phase delay as the phase shifter could be substituted. This precisely cut length of coaxial cable would provide the correct phase delay for the specific tilt of the radar antenna.

DISCUSSION

DESCRIPTION OF PROBLEM.

As stated previously, the NAFEC investigation of the North Platte En Route Radar Site resulted in the conclusion that the reflected reply problem was associated with the terrain surrounding the site. The terrain in this area of Nebraska consisted of sand hills (figure 6) that were almost completely devoid of vegetation and extremely irregular. The long stretches of sloped terrain had a tendency to divert the radiation that illuminated this type of terrain to some angle other than straight ahead.

Normally, radiation that illuminates flat terrain is reflected straight ahead and interferes with the radiation that follows the direct path from the antenna to the aircraft. This produces vertical lobes in the vertical radiation pattern of the antenna. When the terrain is sloped, as in the vicinity of the North Platte site, there is little vertical lobing interference between signals, but a second path is provided at an erroneous azimuth angle from the antenna to the aircraft via the terrain. At the North Platte site this resulted in the aircraft reply being displayed at the site azimuth of the aircraft and also at the site azimuth of the terrain which diverted the radiation to the aircraft. The latter displayed aircraft reply was obviously incorrect and caused problems for the air traffic controller that used the system.

If an observer could stand at the center of the radar beacon antenna and rotate with the antenna, he would find that the terrain he observed that sloped downward with clockwise rotation would produce a terrain-reflected beacon reply that was counterclockwise from the normal beacon reply. Whereas, the terrain that sloped upward with rotation would produce a terrain-reflected

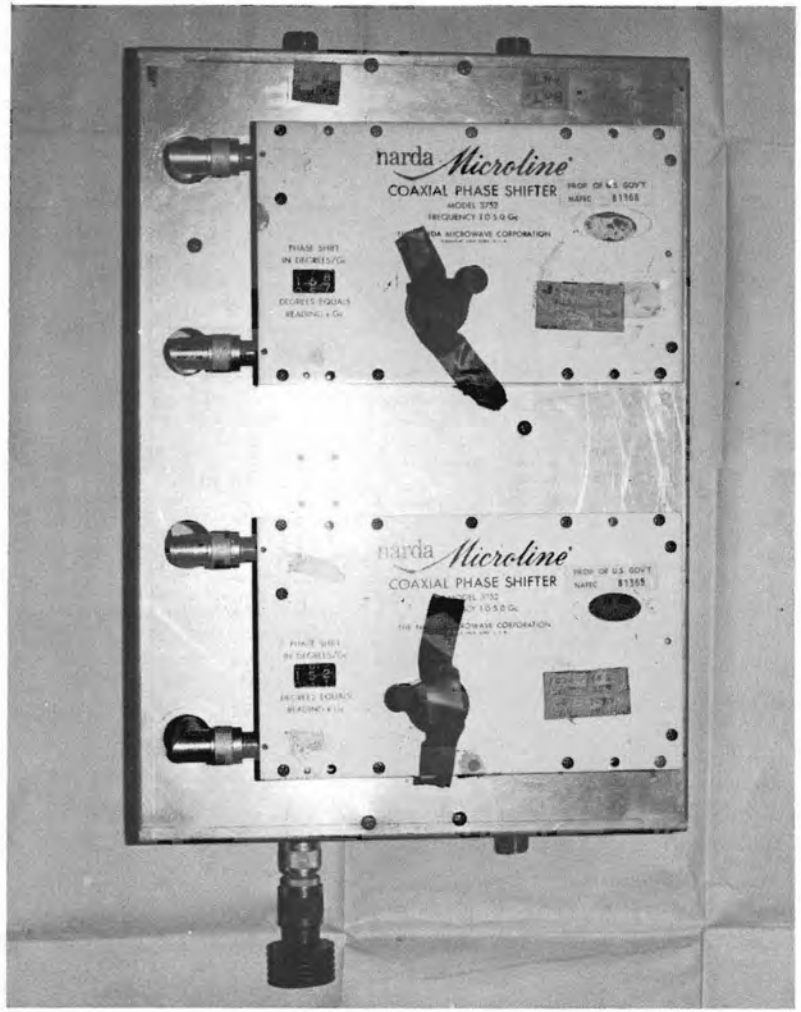

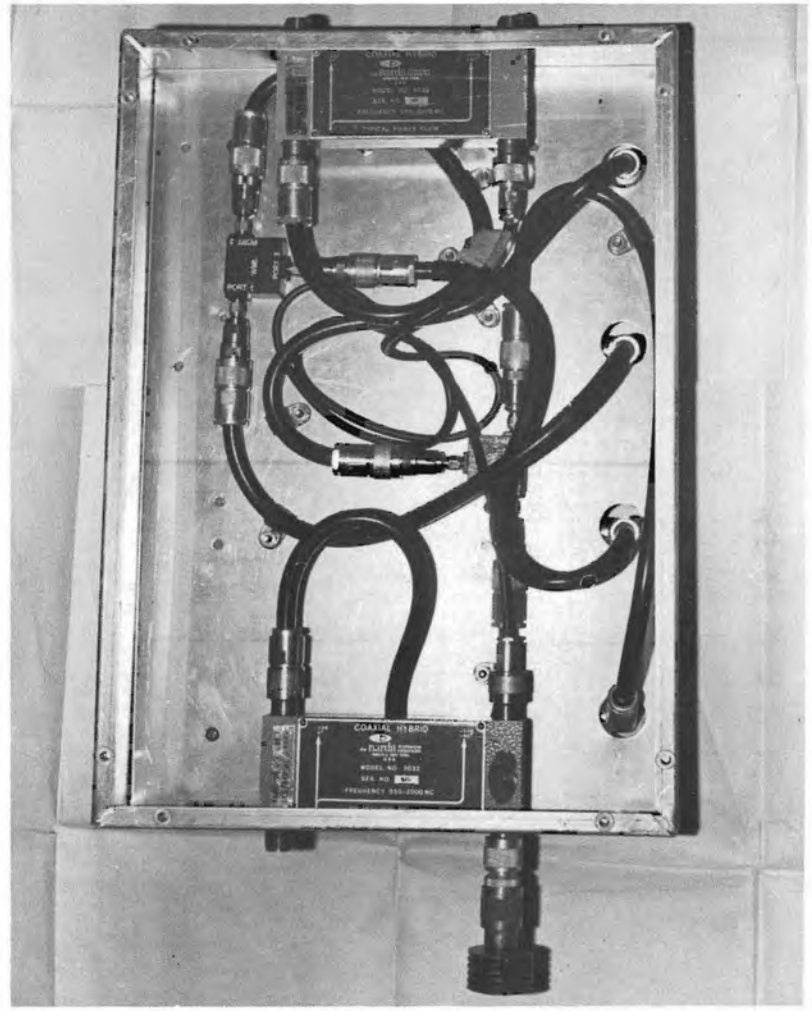

FIGURE 5. POWER DIVIDER NETWORK SHOWING PHYSICAL LAYOUT (FRONT AND REAR VIEWS)

FIGURE 6. TERRAIN IN THE VICINITY OF THE NORTH PLATTE FACILITY LOOKING SOUTHEASTWARD

beacon reply that was clockwise from the normal beacon reply. Figure 7 shows an example of nine terrain-reflected beacon replies that were simultaneously recorded at the North Platte radar site. The normal replies and their terrain-reflected replies are circled. The terrain-reflected replies in the north (330° - 340°) preceded the normal beacon replies, while the terrain-reflected beacon replies in the east and southeast trailed the normal beacon replies.

The terrain-reflected replies that occurred southeast of the North Platte radar site occurred on Jet Airway J80 and were caused by aircraft flying on Jet Airway J64 in the vicinity of Hill City, Kansas. The sloped terrain that was thought to be responsible for these reflected replies was approximately 2,000 feet southeast of the site and is shown in figure 6.

The reasons that the terrain-reflected beacon replies were particularly troublesome in the Hill City, Kansas, area were (1) the reflected replies from aircraft flying on Jet Airway J64 appeared on Jet Airway J80 interleaved with normal aircraft replies, making it difficult to separate the two, and (2) the reflected replies that resulted north of the Hill City intersection on Jet Airway J146 were almost parallel to the airway at this point, and any reflected replies that occurred in this area required that excessively large separations be maintained between aircraft.

The standard directional antenna that was installed at the North Platte site had a vertical radiation pattern similar to that shown in figure 8. The pattern in figure 8 shows that the directional antenna vertical pattern attained a maximum at approximately 8° above the horizon and that considerable energy was transmitted from the directional antenna below the horizon. The energy that was transmitted from the directional antenna below the horizon was responsible for the terrain-reflected beacon replies that occurred on the North Platte radar beacon system. If the energy that was radiated by the standard directional antenna at angles below the horizon could have been eliminated, the terrain-reflected beacon replies would also have been eliminated. The basic design criteria of the NADIF antenna assembly that was used at the North Platte site was to limit the radiation of beacon energy to angles above the horizon.

The most important single factor in the design of antennas for controlling the width/height of the antenna beam is the size of the aperture used to radiate the energy. If a more narrow horizontal pattern is desired, an antenna with a larger width is required. If a more narrow vertical pattern is desired, an antenna with a larger height is required. The vertical aperture of the standard beacon directional antenna is approximately 12 inches high. It therefore produces the very wide vertical pattern shown in figure 8. If the vertical aperture of the ARSR-2 antenna reflector (approximately 23 feet) could be used to radiate the radar beacon energy, considerable control could be exercised over the vertical pattern radiated from such a device.

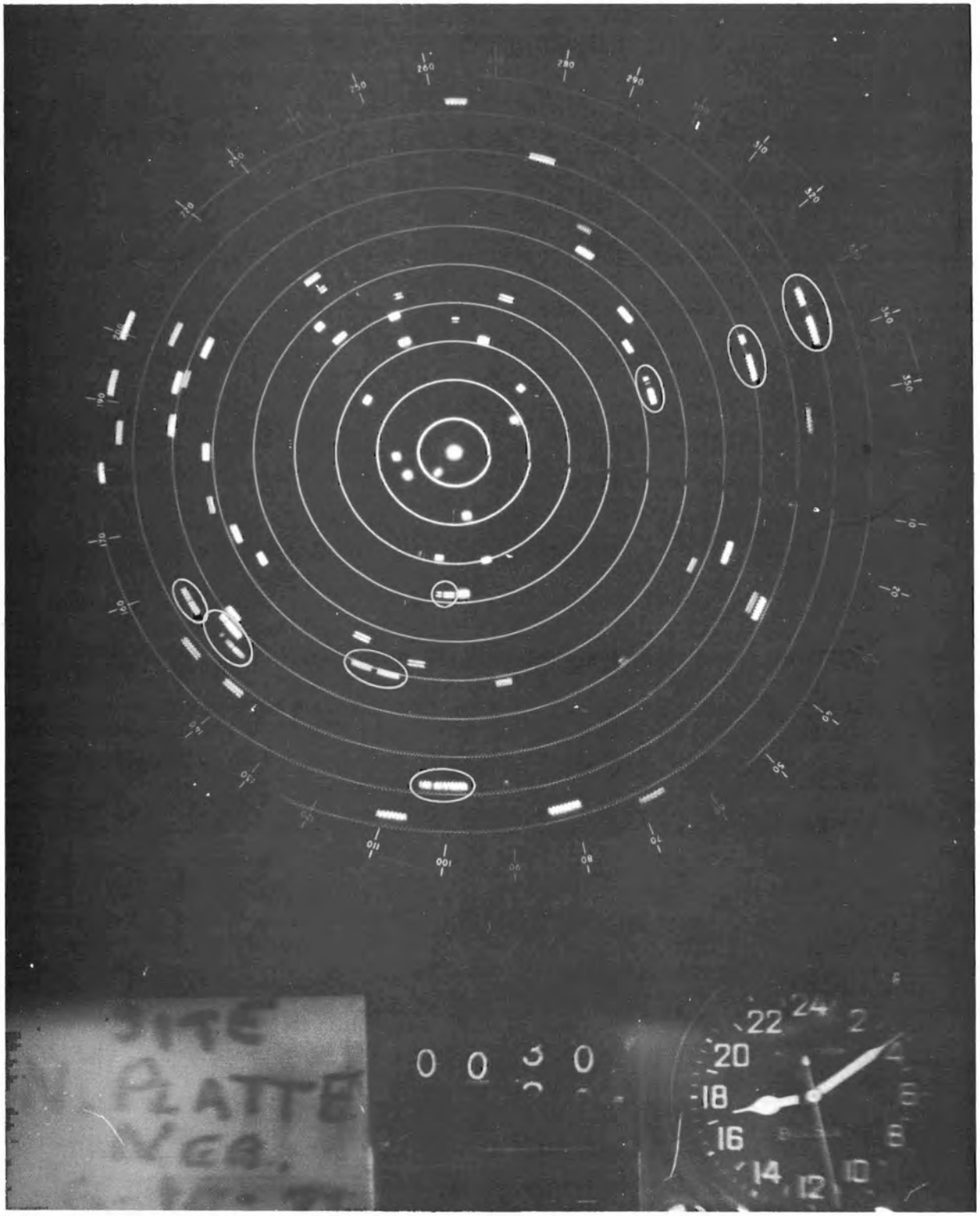

FIGURE 7. NORTH PLATTE DISPLAY SHOWING NINE TERRAIN-REFLECTED REPLIES CAUSED BY THE BROAD VERTICAL PATTERN OF THE STANDARD BEACON DIRECTIONAL ANTENNA

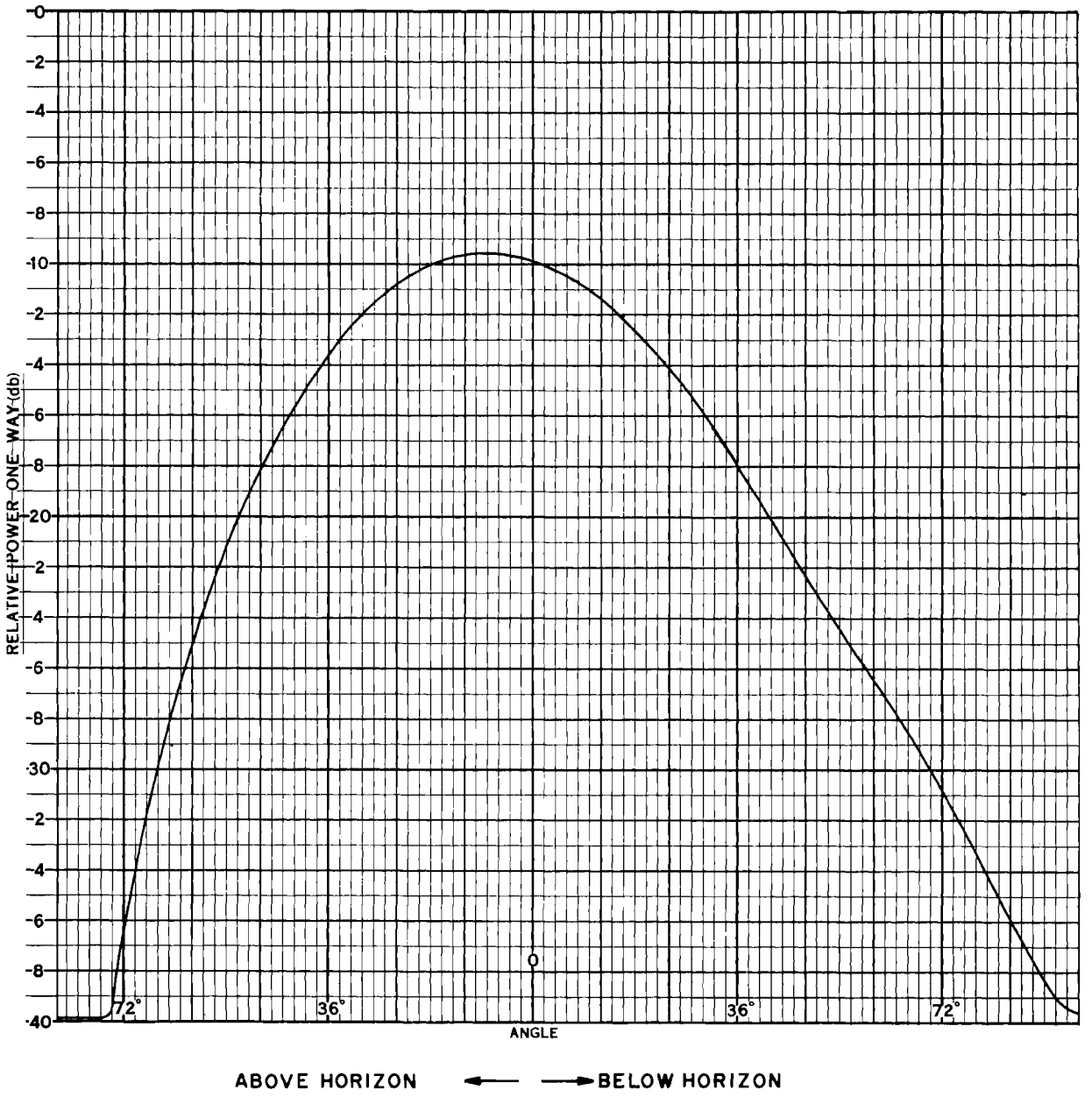

FIGURE 8. VERTICAL RADIATION PATTERN OF THE STANDARD ATCBI, TYPE FA-7202 ANTENNA

FAA WJH Technical Center
00090169

The width of the ARSR-2 antenna reflector is approximately 47 feet. If the ARSR-2 antenna reflector was used to radiate the radar beacon energy, the horizontal beam width of this antenna would be reduced relative to the horizontal beam width of the standard radar beacon directional antenna. The narrower beam width of the ARSR-2 antenna reflector would cause the width of the beacon replies that were obtained by using this antenna to be narrowed when compared with the beacon replies obtained by using the standard radar beacon directional antenna.

During the visit by NAFEC personnel to the North Platte site in June 1972, the question of using the ARSR-2 antenna reflector to radiate the radar beacon energy was discussed. Because the Central Region had previously installed the CPN-18 antenna assembly at the North Platte site to feed the ARSR-2 antenna reflector, they were familiar with the narrow radar beacon replies that would result. They agreed that the narrow radar beacon replies that would result from this modification would not only be acceptable, but would also improve the azimuth resolution of the aircraft returns that the controllers would have to work with. Therefore, the new antenna system would be acceptable if the deficiencies uncovered during the testing of the CPN-18 antenna assembly were eliminated by the new antenna system.

DESIGN OF THE NADIF ANTENNA ASSEMBLY.

Since the Raytheon Company was the designer and builder of the ARSR-2 radar antenna, a visit was made in July 1972 to the Wayland Laboratories of the Raytheon Company in Wayland, Massachusetts. Messrs. Charles F. Winter and Paul Rawlinson were consulted concerning the precise curvature of the ARSR-2 antenna reflector and the feasibility of feeding the ARSR-2 antenna reflector with two pairs of dipole antennas. The precise curvature of the ARSR-2 antenna reflector was required so that radiation patterns could be calculated from theory to determine the optimum primary antenna feed system for the ARSR-2 antenna reflector.

The ARSR-2 antenna consists of a primary feed horn antenna and a reflector. The reflector that was used with the ARSR-2 Antenna was a modified section of a paraboloid whose focal point coincided with the vertical and horizontal centers of the front surface of the radar primary feed horn antenna.

The modifications that were performed by the Raytheon Company on the ARSR-2 antenna reflector consisted of (1) modifying the bottom half of a section of a paraboloid to produce an approximate cosecant-squared type of antenna radiation pattern, and (2) modifying the very bottom of the reflector to increase the antenna radiation at high-elevation angles.

The ideal location for installing a primary feed antenna on a reflector type of antenna is to place the primary feed antenna at the focal point of the basic section of the paraboloid. This position was already occupied on the ARSR-2 antenna by the radar primary feed horn. To modify the radar primary feed horn so that it could have been used to radiate the radar beacon signals would have required extensive development. Therefore, the only

alternative was to install the primary feed antennas that were used for radar beacon frequencies as close to the focal point as the physical dimensions would allow.

One disadvantage of not being at the focal point of the section of the paraboloid is that the vertical beam is skewed. If the primary feed antennas are placed above the focal point, the resulting secondary vertical radiation pattern is skewed downward. Conversely, if the primary feed antennas are placed below the focal point, the resulting vertical radiation pattern is skewed upward. Since the NADIF antenna assembly had a pair of dipole antennas above and below the focal point, the vertical radiation pattern could be adjusted between the two extremes.

The advantage of not using the same primary feed antenna for both radar and radar beacon is that each antenna can be adjusted independent of the other. When the mechanical tilt of the entire ARSR-2 antenna is adjusted to provide a compromise between minimum clutter and maximum coverage at radar frequencies, the tilt might not provide the coverage required at radar beacon frequencies. By providing independent vertical radiation pattern adjustments at both radar and radar beacon frequencies, both requirements can be satisfied.

As mentioned previously, the CPN-18 antenna assembly had been tested at North Platte. The results of the tests showed that the narrow beacon replies that the modification produced were satisfactory. Therefore, the horizontal spacing between the centers of the dipole antennas of the NADIF antenna assembly was kept the same as the CPN-18 antenna assembly (figure 9). Only the vertical spacing between the centers of the pairs of dipole antennas was altered.

The CPN-18 antenna assembly's four dipole antennas were vertically separated by 10 inches (from center to center) and fed with equal amplitude and identical phase. The NADIF antenna assembly, on the other hand, allowed the phase and amplitude being fed to the upper and lower pairs of dipole antennas to be varied. The NADIF antenna assembly also allowed the vertical spacing between the centers of the pairs of dipole antennas to be adjusted for optimum results.

CALCULATION OF NADIF ANTENNA ASSEMBLY RADIATION PATTERNS FROM THEORY.

Since there were numerous approaches that could have been used in the design of the NADIF antenna assembly, antenna vertical radiation patterns were developed from theory to reduce the experimental effort that would be required. There were three principal variables in the design of the NADIF antenna assembly which affected the radiation pattern of the ARSR-2 antenna when it was used to radiate the radar beacon signals. These three principal variables were: (1) the vertical spacing between the centers of the upper and lower pairs of dipole antennas, (2) the amplitude of the signals fed to (or received from) the upper and lower pairs of dipole antennas, and (3) the phase difference between the signals fed to (or received from) the upper and lower pair of dipole antennas.

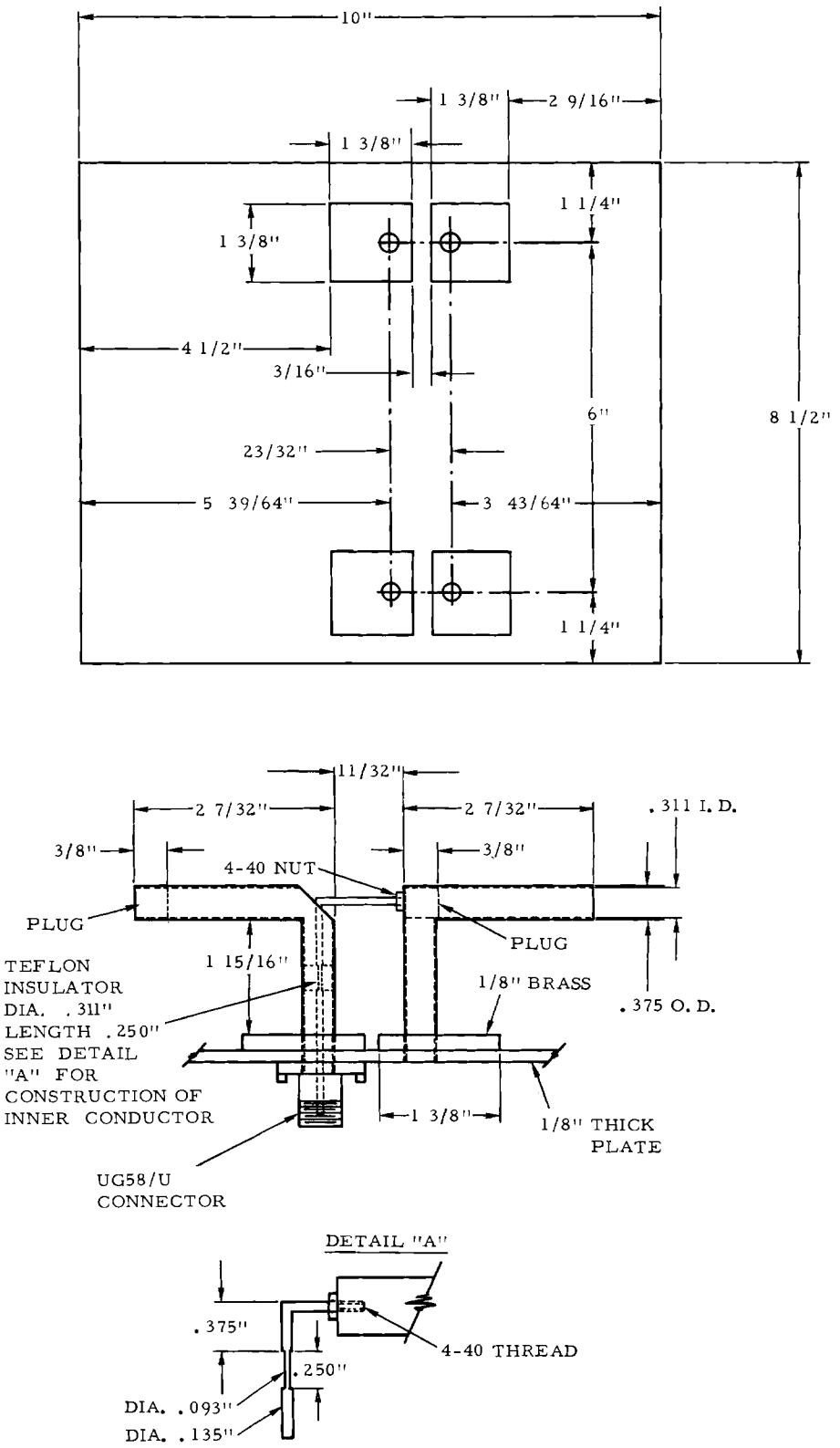

FIGURE 9. MECHANICAL LAYOUT OF THE DIPOLE ANTENNAS AND REFLECTING PLATE USED WITH THE NADIF ANTENNA ASSEMBLY

After considerable research, a method was found to develop antenna radiation patterns which was directly applicable to the ARSR-2 antenna. The theoretical effort was divided into two areas; they were (1) development of the radiation pattern of the primary feed antenna system, and (2) development of the vertical radiation pattern of the ARSR-2 antenna reflector, using the primary feed antenna system developed in (1).

The equations for the design of the primary feed antenna system were developed by NAFEC from information found in the McGraw Hill Electrical and Electonic Engineering Series textbook entitled, "Antennas," by John D. Kraus. The geometry and equations used in the design of the primary feed antenna system are shown in figure 10. The vertical radiation pattern of the primary feed antenna was the only pattern that was calculated. It was assumed that the amplitude distribution across the primary feed array in a horizontal direction was symetrical. Therefore, the vertical radiation pattern was calculated as though there was only one dipole antenna and a reflecting plate above the radar feed horn and one dipole antenna and a reflecting plate below the radar feed horn. Radiators 1 and 2 are the real dipole antennas while radiators 3 and 4 are the image dipole antennas that result from the presence of the reflecting plate. The separation between the real and image dipole antennas is twice the actual distance between the real dipole antennas and the reflecting plate. The image dipole antennas (3 and 4) are shown in equation (1) of figure 10 as negative phasors. The negative sign is used to indicate the reversal of phase that occurs due to the reflection. Equation (2) of figure 10 is used to calculate the vertical radiation pattern of a single dipole antenna. This is used in equation (1) as F_i.

A 180° phase shift is added to the primary feed arrangment to account for the reflection at the reflector surface. The results of the primary feed antenna calculations shown in figure 10 were inserted into equation (1) of figure 11 to determine the overall vertical radiation pattern of the ARSR-2 antenna using the NADIF antenna assembly as the primary feed. Equation (1) of figure 11 is from the Massachusetts Institute of Technology Radiation Laboratory Report 750, "Calculation of Vertical Polar Diagrams and Power Gains of Antennas for Airborne Naviagational Radars," by T. J. Keary, dated September 10, 1945. The author states that the position of the calculated and observed maxima and minima agree within $\pm 1.5°$ and the magnitudes to within ± 2 dB.

Although the above report is concerned with line-source feeds, Samuel Silver in "Microwave Antenna Theory and Design" (1949) discusses the necessary conditions whereby a point-source feed approximates a line-source feed.

The exact vertical curvature of the center section of the ARSR-2 antenna reflector was obtained from the Wayland Laboratories of the Raytheon Company in the form of 37 precise measurements. Because of the proprietary nature of the information, this data will not be included in this report. The measurements that were obtained from the Raytheon Company were further expanded using a 9th degree polynomial to obtain additional intermediate

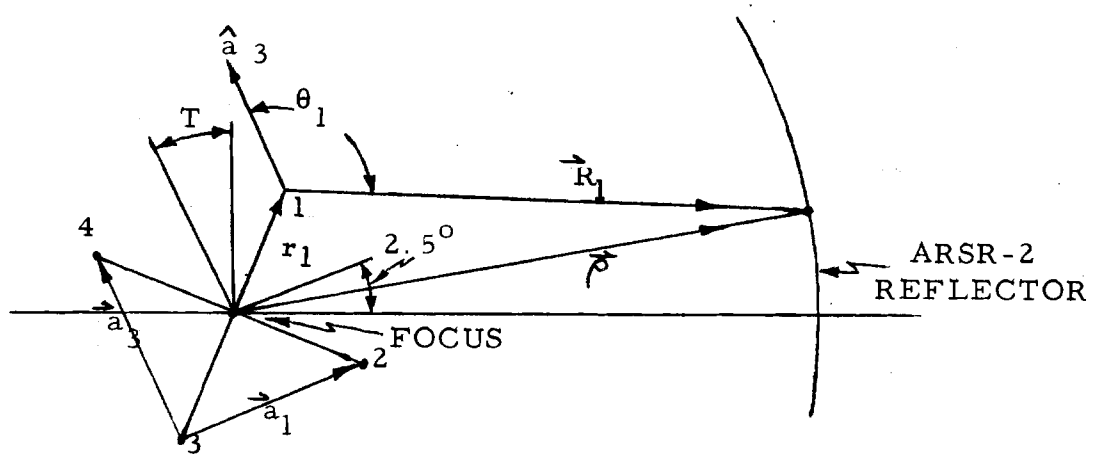

$$[G(\psi)]^{\frac{1}{2}} = \left\{ V_1 \left(F_1 e^{jK(|\vec{\rho}| - |\vec{R}_1|)} - F_4 e^{jK(|\vec{\rho}| - |\vec{R}_4|)} \right) + V_2 \left(F_2 e^{j[K(|\vec{\rho}| - |\vec{R}_2|) - D]} - F_3 e^{j[K(|\vec{\rho}| - |\vec{R}_3|) - D]} \right) \right\} e^{j\pi} \quad (1)$$

WHERE: $\cos\theta_i = \hat{a}_3 \cdot \hat{R}_i$ ($\vec{a}_3$ INDICATES VECTOR a_3 AND

$\sin\theta_i = |\hat{a}_3 \times \hat{R}_i|$ $\hat{a}_3$ INDICATES DIRECTION OF VECTOR a_3)

D = DELAY OF BOTTOM ANTENNAS RELATIVE TO ANTENNA 1

$\vec{a}_1 = -w \cos T\,\hat{j} + w \sin T\,\hat{k}$ = VECTOR FROM IMAGE TO REAL DIPOLE ANTENNA

$\vec{a}_3 = L \sin T\,\hat{j} + L \cos T\,\hat{k}$ = VECTOR FROM BOTTOM TO TOP DIPOLE

w = SEPARATION BETWEEN REAL AND IMAGE DIPOLE ANTENNAS

L = SEPARATION BETWEEN REAL DIPOLE ANTENNAS

T = TILT OF DIPOLE ANTENNAS

$K = 2\pi/\lambda$

V_1 = VOLTAGE OF TOP TWO DIPOLE ANTENNAS (REAL = IMAGE)

V_2 = VOLTAGE OF BOTTOM TWO DIPOLE ANTENNAS (REAL = IMAGE)

$\vec{r}_i$ = VECTOR FROM FOCUS TO ANY DIPOLE ANTENNA

$\vec{R}_i = \vec{\rho} - \vec{r}_i$ = VECTOR FROM DIPOLE ANTENNA TO A POINT ON THE ARSR-2 REFLECTOR

$$F_i = \frac{\cos\left[(K\ell \cos\theta_i)/2\right] - \cos(K\ell/2)}{\sin\theta_i} \quad (2)$$

WHERE: ℓ = LENGTH OF DIPOLE ANTENNA (4.78 INCHES)

FIGURE 10 CALCULATIONS USED TO DEVELOP THE PRIMARY FEED ANTENNA CONFIGURATIONS FOR THE ARSR-2 ANTENNA MODIFICATIONS

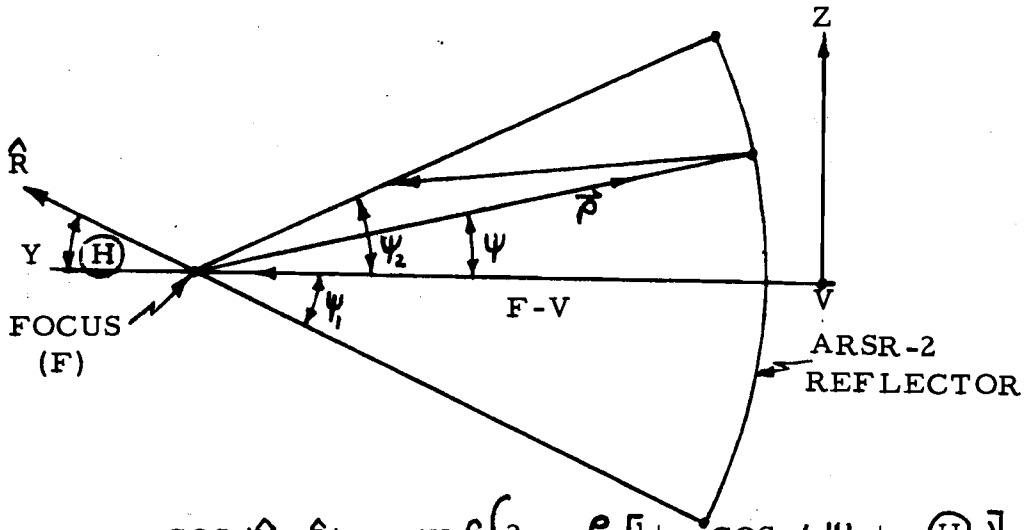

$$E(Ⓗ) = \int_{\psi_1}^{\psi_2} \sqrt{\frac{\rho}{f}}\ \sqrt{G(\psi)}\ \frac{\cos(\hat{N}, \hat{R})}{\cos(\hat{N}, -\hat{\rho})}\ e^{jKf\left\{2 - \frac{\rho}{f}\left[1 + \cos(\psi + Ⓗ)\right]\right.} \quad (1)$$

$G(Ⓗ) = 20 \log E(Ⓗ)/E_{MAX}$ = RELATIVE GAIN OF SECONDARY PATTERN (2)

WHERE

$E(Ⓗ)$ = FIELD INTENSITY OF SECONDARY PATTERN

$\rho = a_0 + a_1\psi + a_2\psi^2 + a_3\psi^3 + a_4\psi^4 + a_5\psi^5 + a_6\psi^6 + a_7\psi^7 + a_8\psi^8 + a_9\psi^9$

= LEAST SQUARE POWER SERIES FIT TO CURVATURE OF REFLECTOR SCREEN

$\vec{\rho} = -\rho\cos\psi\hat{j} + \rho\sin\psi\hat{k}$ = VECTOR FROM FOCUS TO SCREEN

$[G(\psi)]^{\frac{1}{2}}$ = COMPLEX PRIMARY VOLTAGE PATTERN OF DIPOLE ANTENNA ARRAY RELATIVE TO FOCUS (OBTAINED) FROM CALCULATIONS IN FIGURE 2-1

$\hat{R} = \cos Ⓗ\ \hat{j} + \sin Ⓗ\ \hat{k}$ = DIRECTION OF SECONDARY PATTERN

$\hat{N} = d\vec{\rho}/d\psi / |d\vec{\rho}/d\psi|$ = DIRECTION OF VECTOR NORMAL TO SCREEN

$\cos(\hat{N}, \hat{R}) = \hat{N} \cdot \hat{R}$ = COSINE ANGLE BETWEEN NORMAL TO SCREEN AND SECONDARY PATTERN DIRECTION

F-V = FOCUS - VERTEX LINE

$K = 2\pi/\lambda$ = WAVE NUMBER IN VACUUM

ψ_2, ψ_1 = MAX, MIN ANGLES FROM F-V LINE TO END POINTS OF SCREEN

$\cos(\hat{N}, -\hat{\rho}) = \left[1 + \left(\frac{1}{\rho}\ \frac{d\rho}{d\psi}\right)^2\right]^{-\frac{1}{2}}$ = cosine of the angle of incidence

$f = \frac{\rho}{2}(1 + \cos\psi_2)$ = FOCAL LENGTH OF PARABOLIC SECTION ON THE REFLECTOR

FIGURE 11 CALCULATIONS USED TO DEVELOP THE SECONDARY VERTICAL RADIATION PATTERN FOR THE ARSR-2 ANTENNA MODIFICATIONS

points, which increased the accuracy of the integration in equation (1) of figure 11. The integration was accomplished by a computer using Simpson's Rule and 151 points to represent the exact curvature of the ARSR-2 antenna reflector.

The quantities listed at the top of the computer-derived antenna patterns, figure 12, are the conditions under which the pattern was made. For example:

1.030E9	.422E0	1.	90.	4.5	22	2.5	-30	40.6	150	32.3
A	B	C	D	E	F	G	H	I	J	K

A = Frequency of the feed, i.e., 1.030×10^9 Hz

B = Voltage of upper dipole relative to lower dipole, i.e.,.422 x 10° volts = .422E0 = -7.5-dB gain. (See Note).

C = Voltage of lower dipole, i.e., 1 volt = 0-dB gain.

D = Phase delay of signal to lower dipole with respect to upper dipole.

E = Separation of real and image dipole, in inches.

F = Separation of upper and lower real dipoles, in inches.

G = Tilt of dipole array with respect to design focus-vertex line (degrees).

H = Minimum angle from focus to reflector.

I = Maximum angle from focus to reflector.

J = An even number required for Simpson's rule calculations.

K = Peak gain of secondary pattern in dB.

The peak gain of the dipole array/reflector antenna system can be calculated to within less than 2 dB of the measured gain. The equation for peak-gain calculation is

$$G = 10 \text{ Log}\left(\frac{Wgf}{\lambda} \quad (E\ (\theta)_{max})^2\right)$$

where (g) is the peak-to-average power ratio of the dipole array, (f) is the focal length of the parabolic section, $E(\theta)_{max}$ is the field intensity of the secondary pattern, (λ) is the wavelength, (W) is the width of the reflector in the horizontal plane. G is printed (in decibels) in the top right-hand corner of all plots.

By multiplying each of the real and imaginary dipole antenna patterns by a factor that represents the space attenuation between the antennas and points on the reflector, the peak-gain error can be reduced to less than 1.4 dB.

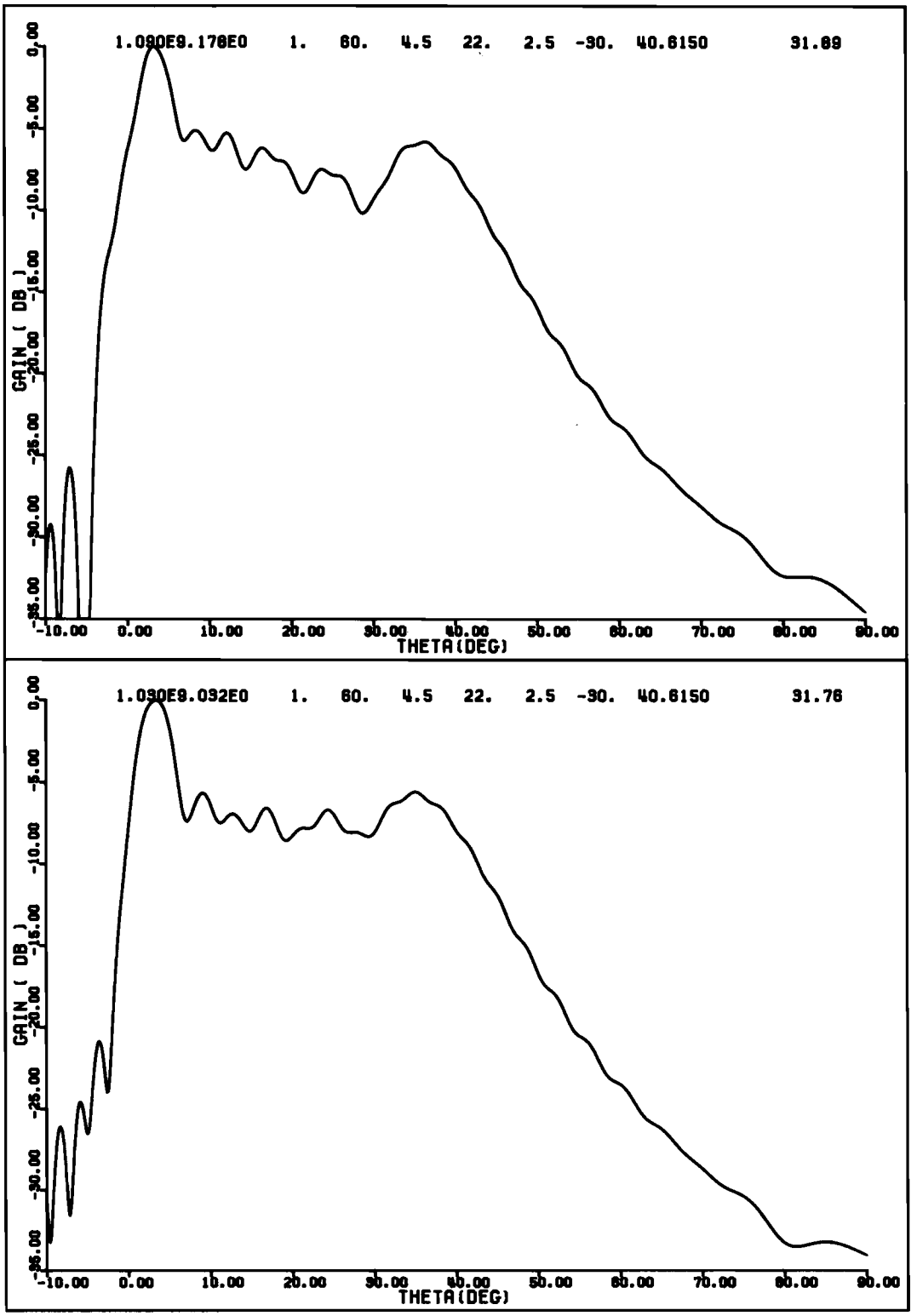

FIGURE 12. VERTICAL RADIATION PATTERNS FOR 1030 MHz AND 1090 MHz CALCULATED FROM THEORY

NOTE: Resultant attention levels of the upper dipoles relative to the lower dipoles are as follows (lower dipole voltage at 1.0):

Voltage of upper dipoles	Attenuation in dB
1.000E0	0
.750E0	2.5
.562E0	5.
.422E0	7.5
.316E0	10.
.178E0	15.
.100E0	20.
.056E0	25.
.032E0	30.

NAFEC TESTS

GENERAL.

The experimental tests that were performed at NAFEC on the NADIF antenna assembly included (1) laboratory tests to minimize the standing wave ratio (SWR) and adjust transmission line lengths and (2) flight tests of the antenna assembly once it was installed on the Elwood, New Jersey, Experimental En Route Radar Site.

LABORATORY TESTS.

Since the half-wavelength dipole antennas of the NADIF antenna assembly were separated into pairs, some type of matching device had to be designed to feed each pair of dipole antennas. A matching device was required which would not only feed equal amplitude signals to the two dipole antennas of each pair, but also match the impedance of the two dipole antennas when they were connected in parallel to a 50-ohm impedence system. Figure 13 shows the type of device that was designed by NAFEC to feed the two dipole antennas of each pair. The SWR of a single dipole antenna of the NADIF antenna assembly measured 1.75:1 at 1030 MHz and 2.40:1 at 1090 MHz. Therefore, a simple two-way power divider or a hybrid junction would not have provided the impedance match to a 50-ohm system that was required.

The matching device shown in figure 13 reduced the SWR of each pair of dipole antennas to 1.75:1 by using a quarter-wave ($\lambda/4$) coaxial transformer in each leg of the matching device. An SWR maximum of 1.5:1 was the design goal, but further experimentation to reduce the SWR of the matching device was halted so that flight testing of the antenna assembly could begin. (An improved matching device was designed by NAFEC after the North Platte testing was completed. The improved device used a single $\lambda/4$ transformer in lieu of the two $\lambda/4$ transformers used in the matching device of figure 13. The SWR of the improved matching device averaged 1.15:1. A sketch of the improved matching device is provided in figure 14.

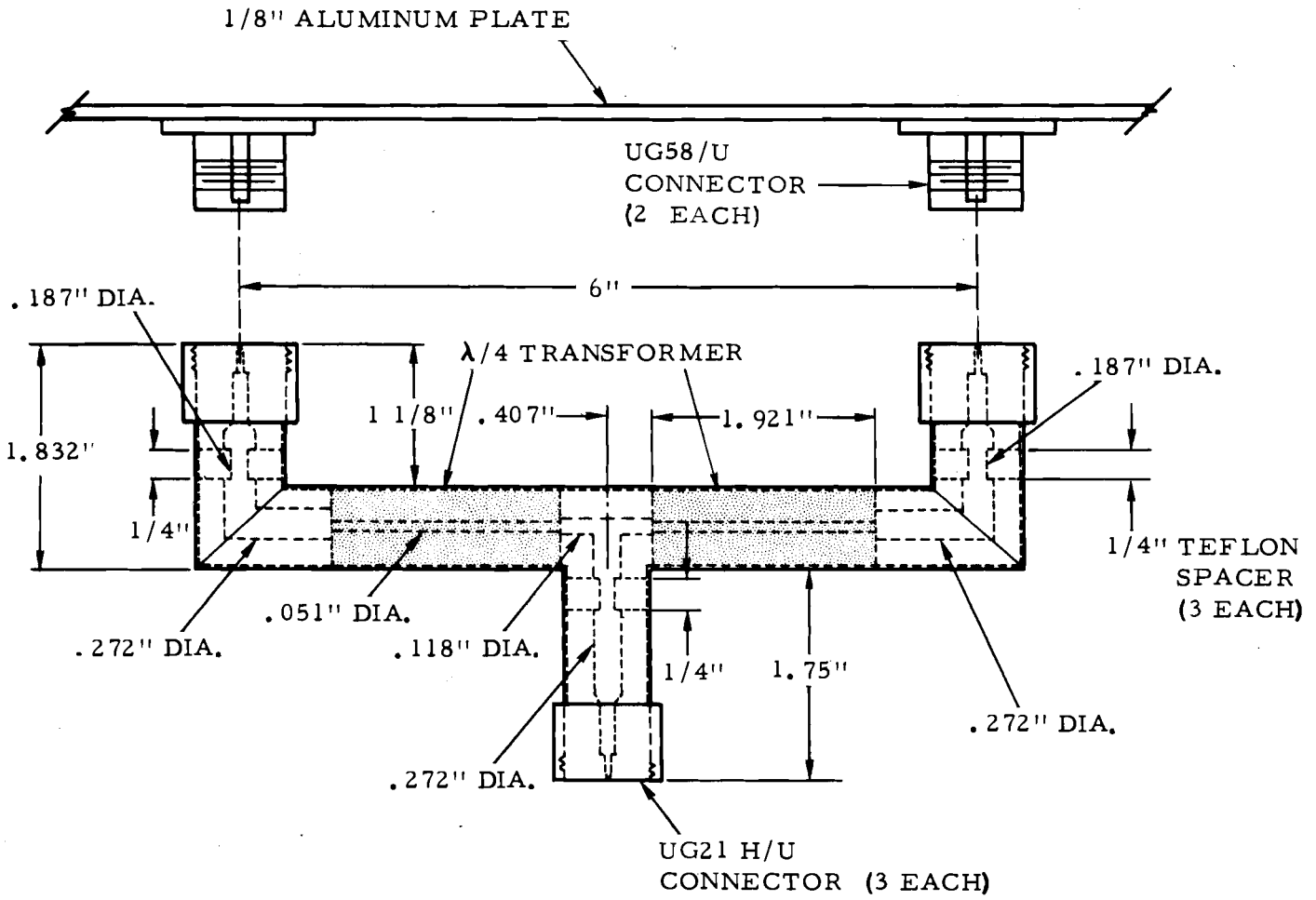

NOTE: 1. λ/4 TRANSFORMERS AND 1/4" SPACERS ARE FABRICATED FROM TEFLON ROD.

2. THE TUBING IS BRASS WITH A 0.682" O.D. AND A 0.627" I.D.

3. THE CENTER CONDUCTOR IS BRASS ROD MACHINED TO VARIOUS DIAMETERS.

FIGURE 13 COAXIAL MATCHING DEVICE DESIGNED TO MATCH TWO DIPOLE ANTENNAS TO A SINGLE 50-OHM IMPEDANCE SOURCE

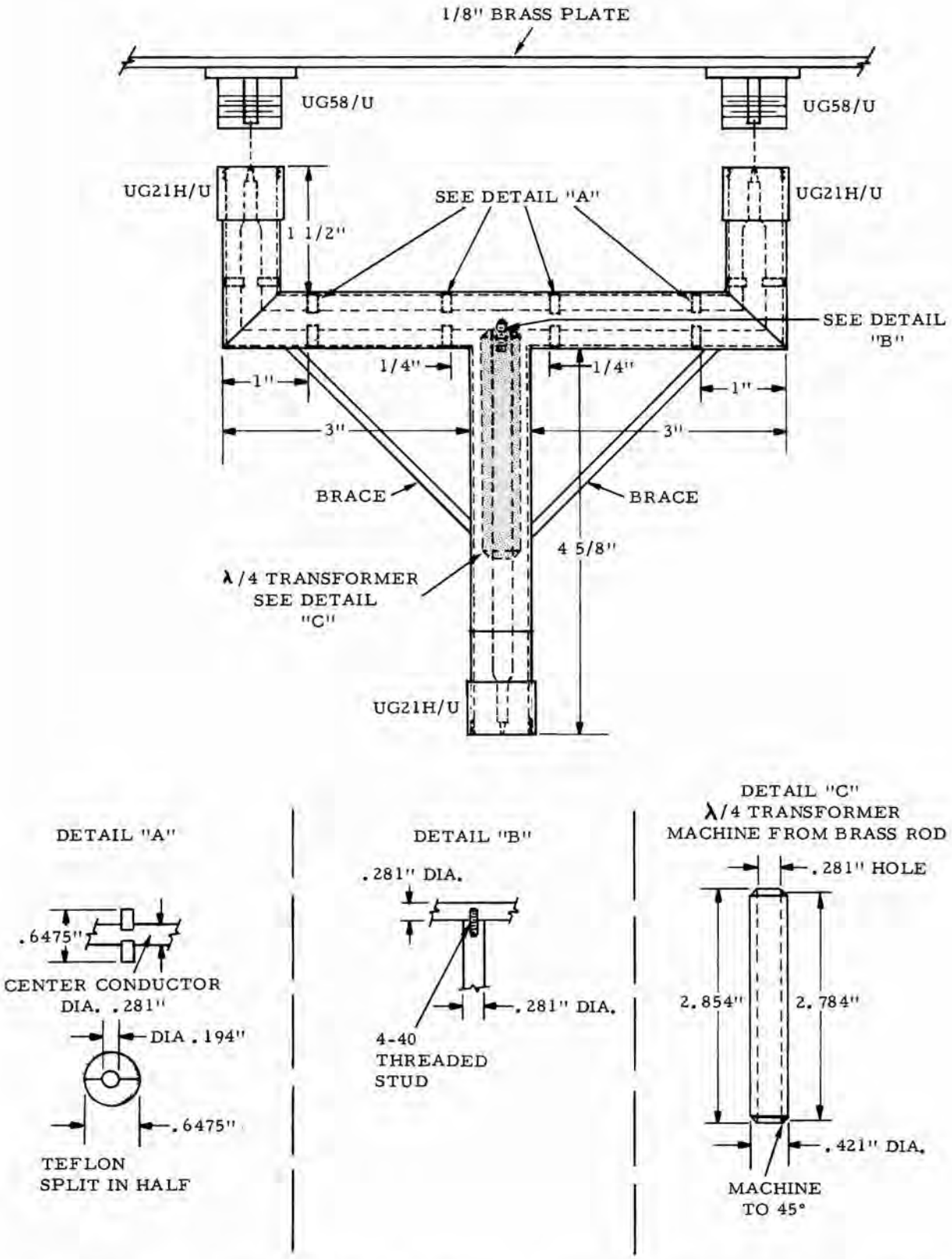

FIGURE 14. IMPROVED COAXIAL MATCHING DEVICE DEVELOPED BY NAFEC AFTER NORTH PLATTE TESTS WERE COMPLETED

Laboratory tests were also performed at NAFEC on the power divider network that was used to adjust the amplitude of the signals that were fed to the separate pairs of dipole antennas. The length of the transmission lines that joined the input and output coaxial hybrids, the ferrite circulators, and the coaxial phase shifters were adjusted for equal phase and attenuation. These adjustments were made at 1030 and 1090 MHz so that a reading of zero on the dial of the coaxial phase shifters actually produced a zero degree difference in the actual phase between the top and bottom lines that joined the input and output coaxial hybrids (review figure 4). RG-58 c/u coaxial cable was used to join the top ports of the input and output coaxial hybrids. The RG-58 c/u cable (high-attenuation cable) was used to provide the added attenuation needed to equal the longer lengths of RG-213/U coaxial cable (low-attenuation cable) that joined the ferrite circulators and coaxial phase shifters to the coaxial hybrids.

NAFEC FLIGHT TESTS.

Flight tests were conducted at NAFEC using several different antenna feed configurations mounted on the ARSR-2 antenna at the Elwood, New Jersey, Experimental En Route Radar Site. The antenna configurations that were tested included the standard ATCBI antenna, type FA-7202, the CPN-18 antenna assembly, the NADIF antenna assembly, and a feed consisting of a single pair of dipole antennas. The operational parameters of the Elwood facility were adjusted to simulate the parameters of the North Platte facility wherever possible. These included a mechanical tilt of 1 1/2° degrees above the horizon and an interrogator peak power output of 1,000 watts. Channel 2 of the air traffic control beacon interrogator (ATCBI-3) was used for a majority of the tests and was calibrated prior to and during the tests. The following adjustments were made:

Transmitter Peak Power	1,000 Watts
P_1 Pulse Width	0.8 μs
P_2 Pulse Width	0.8 μs
P_3 Pulse Width	0.8 μs
P_1 - P_2 Spacing	2.0 μs
P_1 - P_3 Spacing (Mode 3/A)*	8.0 μs
Receiver Tangential Sensitivity	-87.5 dBm
Receiver Sensitivity Time Control (STC) Curve	42.0 dB

*Mode 3/A was the only mode of interrogation used during the testing.

Flight tests were conducted between September and October 1972 to determine the radar beacon coverage of the Elwood facility with the various ARSR-2 antenna modifications installed. The flight tests were flown on the 118° magnetic radial of the Elwood facility. This radial allowed the pilot to change altitudes within the confines of warning area 107 and at the same time avoided areas of high aircraft traffic density.

The flight tests were flown at altitudes between 26,000 and 41,000 feet from a point 30 nmi west of the Elwood facility to a point 200 nmi east of the site on the 118° radial. This flight test course provided a means of checking the overhead coverage of the Elwood facility as the aircraft flew directly over the site. The altitude restrictions of the flight tests were thought to be within the altitudes covered by most of the commercial aircraft flying within the coverage area of the North Platte facility.

A Convair, type CV-880, jet aircraft (N-112) was used for all of the NAFEC flight tests (figure 15). The aircraft utilized two Bendix Corporation, type TRU-1, transponders that exhibited the following characteristics:

	Serial No. 55*	Serial No. 97
Receiver Sensitivity (Normal)	-77.0 dBm	-77.0 dBm
Receiver Sensitivity (Low)	-70.5 dBm	-70.5 dBm
Transmitter Power Output (Peak)	650 Watts	590 Watts

*Transponder serial No.55 was used for most of the tests.

A discrete 4096 mode 3/A code was used during all of the NAFEC flight tests to enable displaying the replies of the flight test aircraft while excluding all other aircraft replies. The flight test data were displayed on two PPI displays, type AN/UPA-35, and recorded on film. Two different photographic techniques were used to record the data on film. The one photographic technique consisted of "open shutter" photography, where each radial flight test was recorded in its entirity on a single 4-inch X 5-inch piece of film. This allowed examination of the entire flight test by viewing one positive print of the data. One disadvantage of this type of data recording was that the entire filmed recording could be destroyed by a single abnormality, such as strobing or vibration, that might take place for just one instant during the long interval of time the shutter was open.

The second photographic technique that was used to record data on film during the NAFEC flight tests was "single frame" photography. A single frame of 35 mm film was exposed in the time it took the antenna to complete one rotation. This type of data recording was not as susceptible to destruction by the occurrence of a single abnormality, but it did require the use of much more film. One advantage of this type of film data was that it could be viewed collectively as a "motion picture." A 35mm "multidata" camera had to be used to insure correct registration of the exposure of the display so that there was no shift from one frame to the next.

In both cases the photographic data showed the general quality of the video in terms of relative signal strength (reply width), loss of replies, broken replies, reflections, etc.

FIGURE 15. JET AIRCRAFT, CONVAIR 880M, USED FOR NAFEC FLIGHT TESTS

RESULTS OF THE NAFEC FLIGHT TESTS.

In viewing the results of the NAFEC flight test program, it should be kept in mind that actual test patterns of the ARSR-2 antenna modifications could not be obtained in the time allotted because of the large physical dimensions of the antenna. The ARSR-2 antenna was approximately 23 feet high and 47 feet wide. Therefore, an in-depth analysis of the NAFEC flight test data had to be made to determine the actual radiation patterns that resulted from each of the ARSR-2 antenna modifications.

Prior to testing any of the ARSR-2 antenna modifications on the Elwood, New Jersey, En Route Radar Site, flight tests were conducted using the standard ATCBI directional antenna, type FA-7202. The results of these tests served as a reference to enable rating the performance of the ARSR-2 antenna modifications. Figure 16 shows the results of a typical flight test using the standard ATCBI directional antenna with a radar antenna tilt of 1 1/2°; the same as that used at the North Platte facility. The radar beacon coverage that figure 16 depicts was satisfactory to a range of approximately 190 nmi (50-nmi range marks) where the video gate ended. The video gate was extended to 200 nmi for the remainder of the flight tests.

Figure 16 does not show any anomolies such as reflections or unusual narrowing in the width of the radar beacon replies due to vertical lobing. This was to be expected since the terrain in the vicinity of the Elwood facility was substantially free from reflecting surfaces, and a dense terrain coverage of trees existed to within approximately 200 feet of the site. The data of figure 16 show the normal radar beacon reply width that was obtained using the standard ATCBI directional antenna. These replies were somewhat wider than the radar beacon replies that were recorded during the remainder of the NAFEC testing using the various ARSR-2 antenna modifications.

The strobing that was recorded on figure 16 northeast and west of the center of the display was due to a problem that existed in the PPI display that was used to record the flight test data. This problem was never resolved during the testing that took place at NAFEC, but the strobing did not interfere with the flight test data that were recorded on the 118° radial of the site.

The first modification that was performed on the ARSR-2 antenna consisted of installing the CPN-18 dipole feed assembly above the radar feed horn. This installation was the same as the CPN-18 dipole feed assembly installation that was tested at the North Platte facility in 1970. Since the CPN-18 dipole feed assembly was installed above the focal point of the ARSR-2 antenna, it was expected that the antenna vertical beam would be skewed downward and reach a maximum below the horizon when used with an ARSR-2 antenna tilt of 1 1/2°. The lowered vertical beam could produce vertical lobing nulls in the vertical radiation pattern of the antenna due to phase cancellation resulting from terrain-reflected energy.

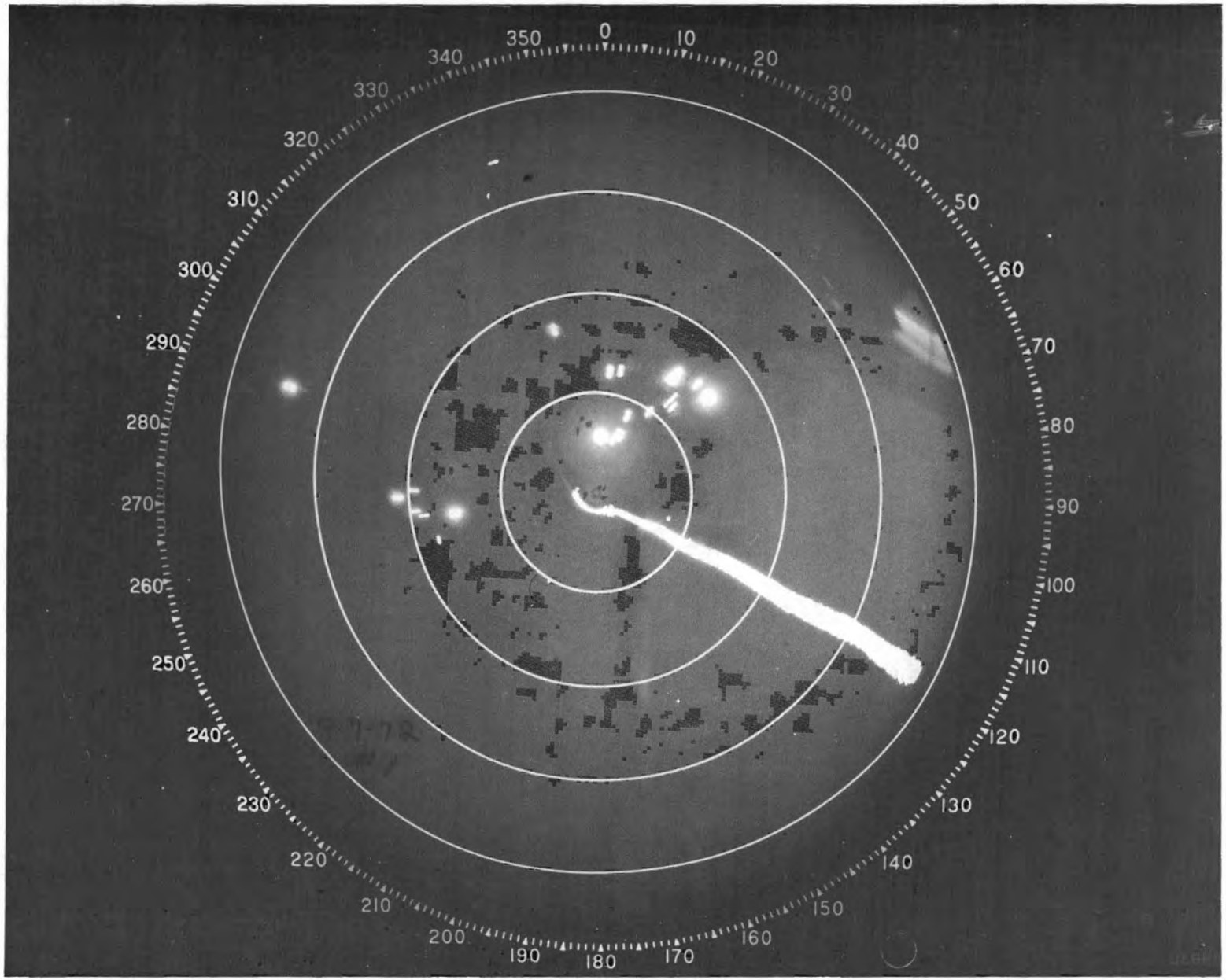

FIGURE 16. NAFEC FLIGHT TEST DATA USING STANDARD DIRECTIONAL ANTENNA, TYPE FA-7202

Figure 17 shows the results of a typical flight test using the CPN-18 dipole feed assembly mounted above the radar feed horn. This antenna configuration produced relatively wide variations in the width of the beacon replies at ranges between 125 and 180 nmi. This reduction in the width of the beacon replies was noted during all tests conducted with the CPN-18 dipole feed assembly mounted above the radar feed horn.

The next ARSR-2 antenna modification that was performed at NAFEC consisted of mounting the CPN-18 dipole feed assembly below the radar feed horn. It was assumed that this ARSR-2 antenna modification would result in raising the main beam of the vertical radiation pattern above the horizon. This should have caused a possible reduction in the width of near-horizon replies, particularly at long ranges. This narrowing of replies was verified by the flight test data shown in figure 18.

The radar beacon coverage, directly over the ARSR-2 site was limited to approximately 9 nmi with the CPN-18 dipole feed assembly mounted above the radar feed horn and with the flight test aircraft flying at an altitude of 31,000 feet. Identical overhead coverage was obtained with the CPN-18 dipole feed assembly mounted below the radar feed horn, but in this case the flight test aircraft was flying at an altitude of 41,000 feet. This indicated that the CPN-18 dipole feed assembly mounted below the radar feed horn provided better overhead coverage, since identical coverage was obtained at a higher altitude when the CPN-18 dipole feed assembly was installed below the radar feed horn.

All NADIF antenna assembly modifications of the ARSR-2 antenna evolved from computer-derived vertical radiation patterns that were mentioned earlier in this report. The three variables that were used in the calculations of these patterns were (1) the center-to-center spacing between the top and bottom pairs of dipole antennas, (2) the relative amplitudes of the signals applied to each pair of dipole antennas, and (3) the phase delay of the signals fed to the lower pair of dipole antennas relative to the phase of the signals applied to the upper pair of dipole antennas. Because of some minor problems with the computer program at the time of the NAFEC tests, the patterns were not considered highly reliable. However, they were good initial guidelines for determining which experimental configurations should be tested.

The first NADIF antenna assembly modification that was tested at the Elwood ARSR-2 facility utilized a 27-inch (center-to-center) vertical separation between the upper and lower pairs of dipole antennas. During these tests, the amplitude of the 1030- and 1090-MHz signals fed to (received from) the upper pair of dipole antennas was 6 dB less than the signals fed to (received from) the lower pair of dipole antennas. The phase of the signals fed to (received from) the lower pair of dipole antennas was also delayed 90° relative to the phase of the signals fed to (received from) the upper pair of dipole antennas.

Figure 19 shows the results of a typical flight test using the 27-inch separation and a 6-dB difference between the signals fed to (received from) the upper and lower dipole antennas. The width of the radar beacon replies

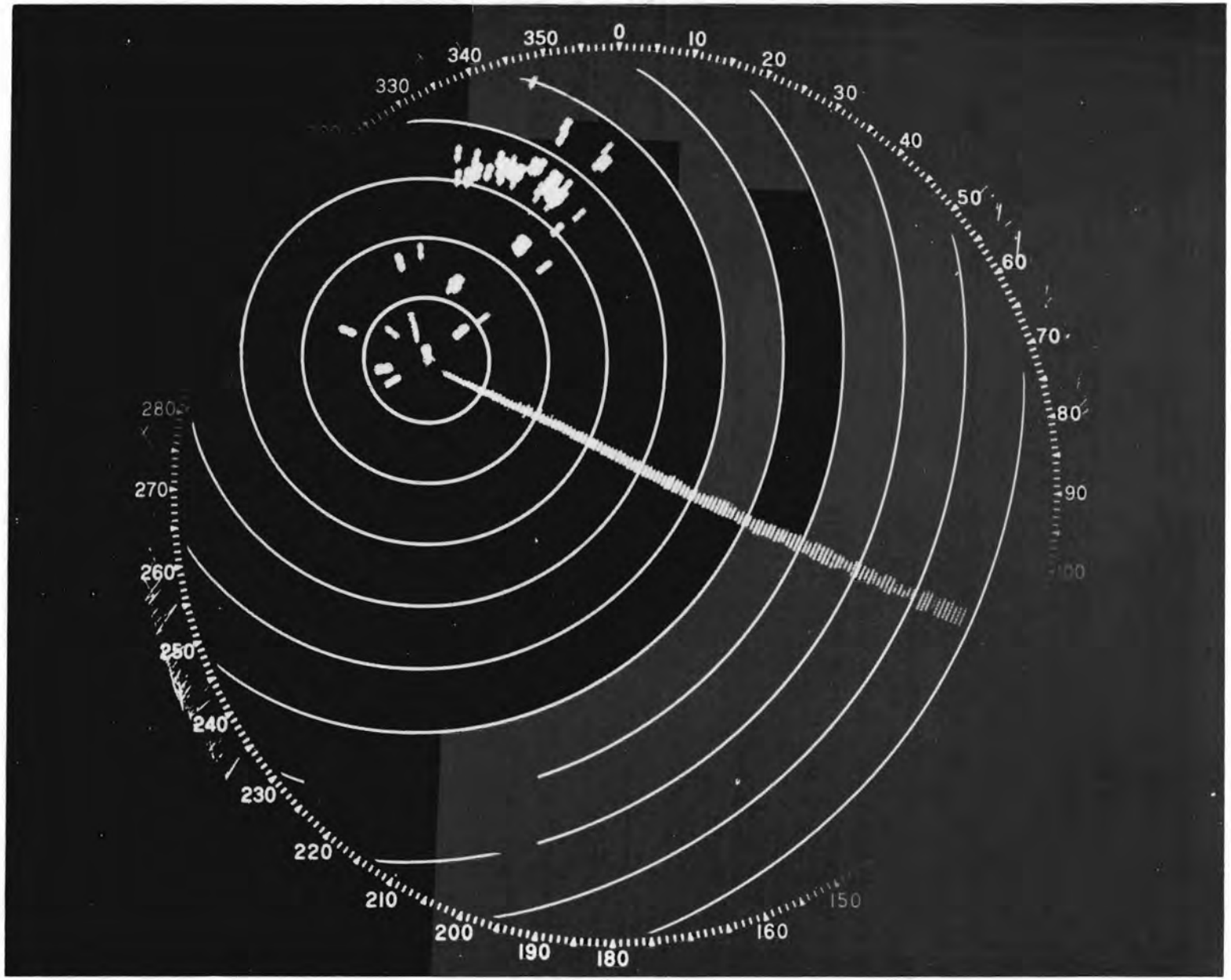

FIGURE 17. NAFEC FLIGHT TEST DATA USING THE CPN-18 DIPOLE FEED ASSEMBLY MOUNTED ABOVE THE RADAR FEED HORN

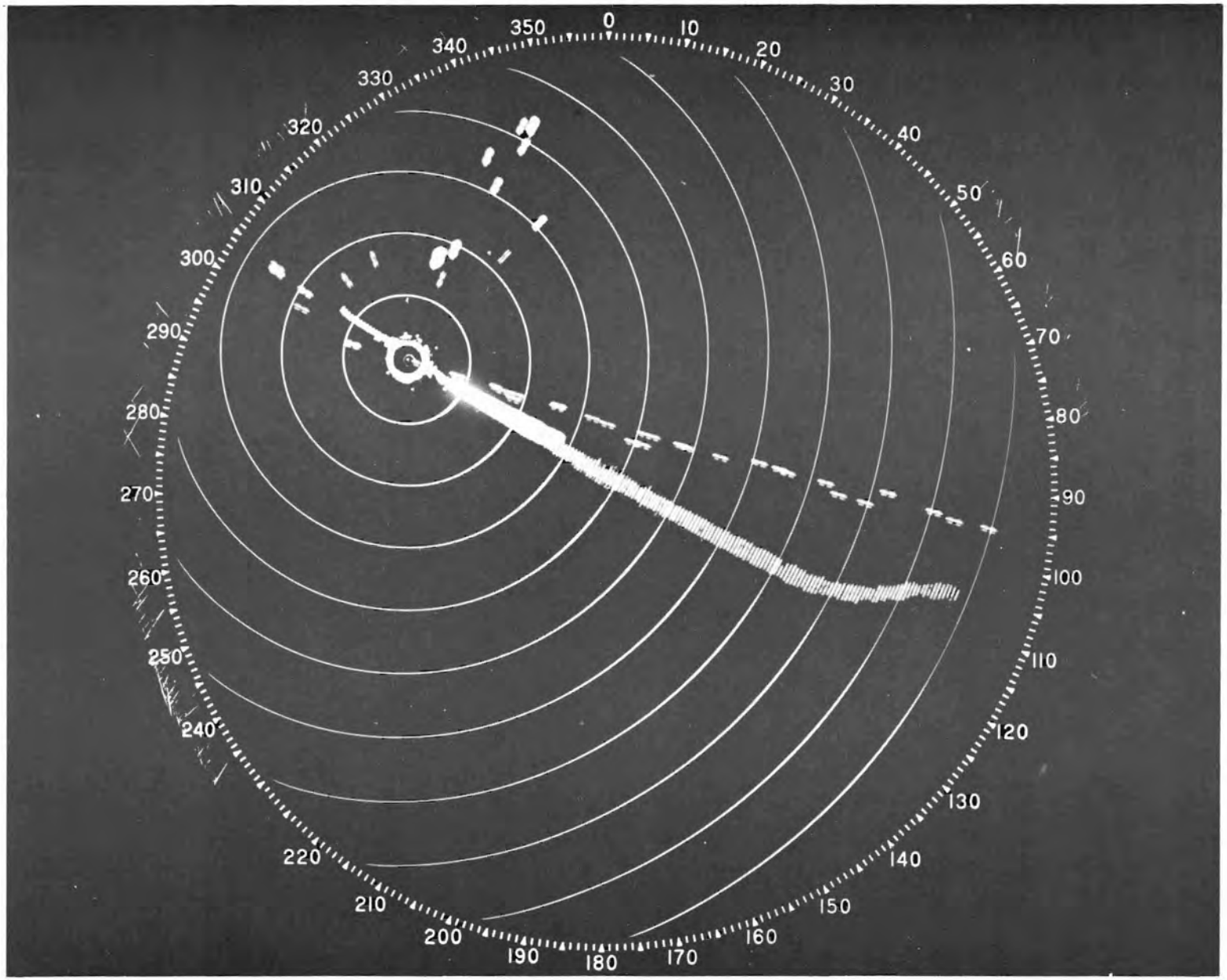

FIGURE 18. NAFEC FLIGHT TEST DATA USING THE CPN-18 DIPOLE FEED ASSEMBLY MOUNTED BELOW THE RADAR FEED HORN

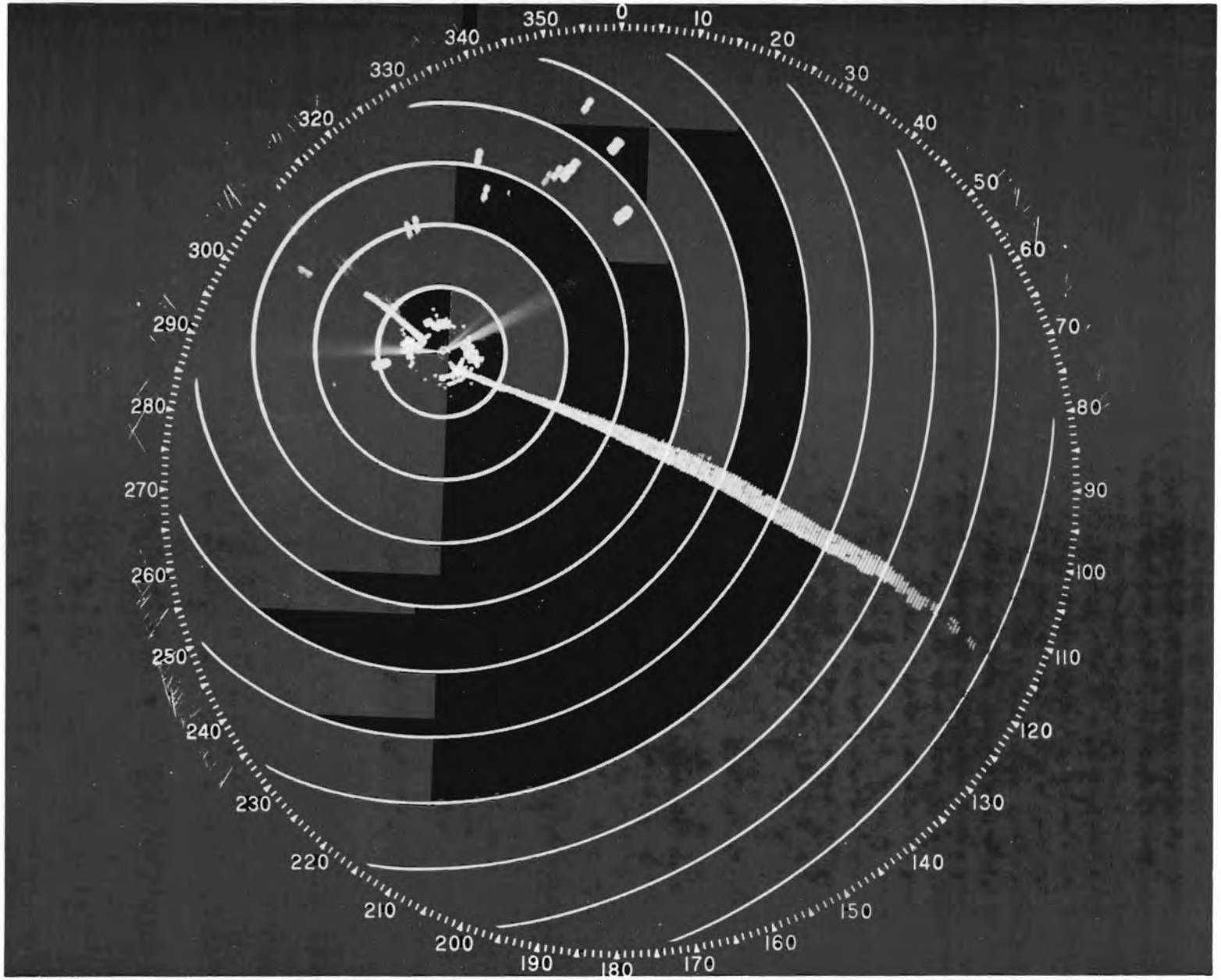

FIGURE 19. NAFEC FLIGHT TEST DATA USING THE NADIF ANTENNA ASSEMBLY MODIFICATION WITH 27-INCH VERTICAL SEPARATION

at ranges beyond 155 nmi was narrowed. This seemed to indicate that the vertical pattern was deflected too far downward. The deflection of the main beam of the vertical pattern downward into the terrain would have a tendency to produce vertical lobing and poor long-range coverage if this antenna configuration was installed at the North Platte facility.

The second NADIF antenna assembly modification that was tested at the Elwood ARSR-2 facility utilized a 22-inch vertical separation between the upper and lower pairs of dipole antennas. In order to move the pairs of dipole antennas closer together, a portion of the reflecting plate on which the dipole antennas were mounted was removed. This meant that the dipole antennas were no longer in the vertical center of the reflecting plate, but the tests showed no adverse effect. The pairs of dipole antennas were also moved forward toward the ARSR-2 antenna reflecting screen so that the reflecting plate was now approximately 3/8 inch in front of the radiating surface of the radar feed horn.

During these tests, the amplitude of the 1030- (1090-) MHz signals fed to (received from) the upper pair of dipole antennas was 30 dB (15 dB) less than the signals fed to (received from) the lower pair of dipole antennas. Figure 20 shows the results of a typical flight test using the 22-inch separation, the power distribution just described, and a 90° phase delay in the signals fed to (received from) the upper pair of dipole antennas. This configuration yielded very good results, but there seemed to be many sidelobe returns.

The third NADIF antenna assembly modification that was tested at the Elwood ARSR-2 facility used the same configuration as the previous test with the exception that a 60° phase difference was used between the upper and lower pairs of dipole antennas in lieu of the 90° phase difference that was previously used.

Figure 21 shows the results of a typical flight test using the 60° phase delay. This particular test configuration resulted in data that showed continuous coverage at all ranges. Successive flight tests conducted on the same day, using this same test configuration, only tended to confirm the conclusion that this test configuration produced the best results.

Further testing was conducted using the NADIF antenna assembly to determine whether the same continuous coverage, at all ranges, that the previous test configurations produced might also be obtained if more energy was being fed to (received from) the upper pair of dipole antennas. Figure 22 shows the results of a typical flight test with a 20-dB difference in amplitude being fed to (received from) the upper and lower pairs of dipole antennas at both 1030 and 1090 MHz and a 60° phase delay between the upper and lower pairs of dipole antennas. The data of figure 22 show that the radar beacon coverage was poor at ranges beyond 180 nmi during a typical flight test using this configuration.

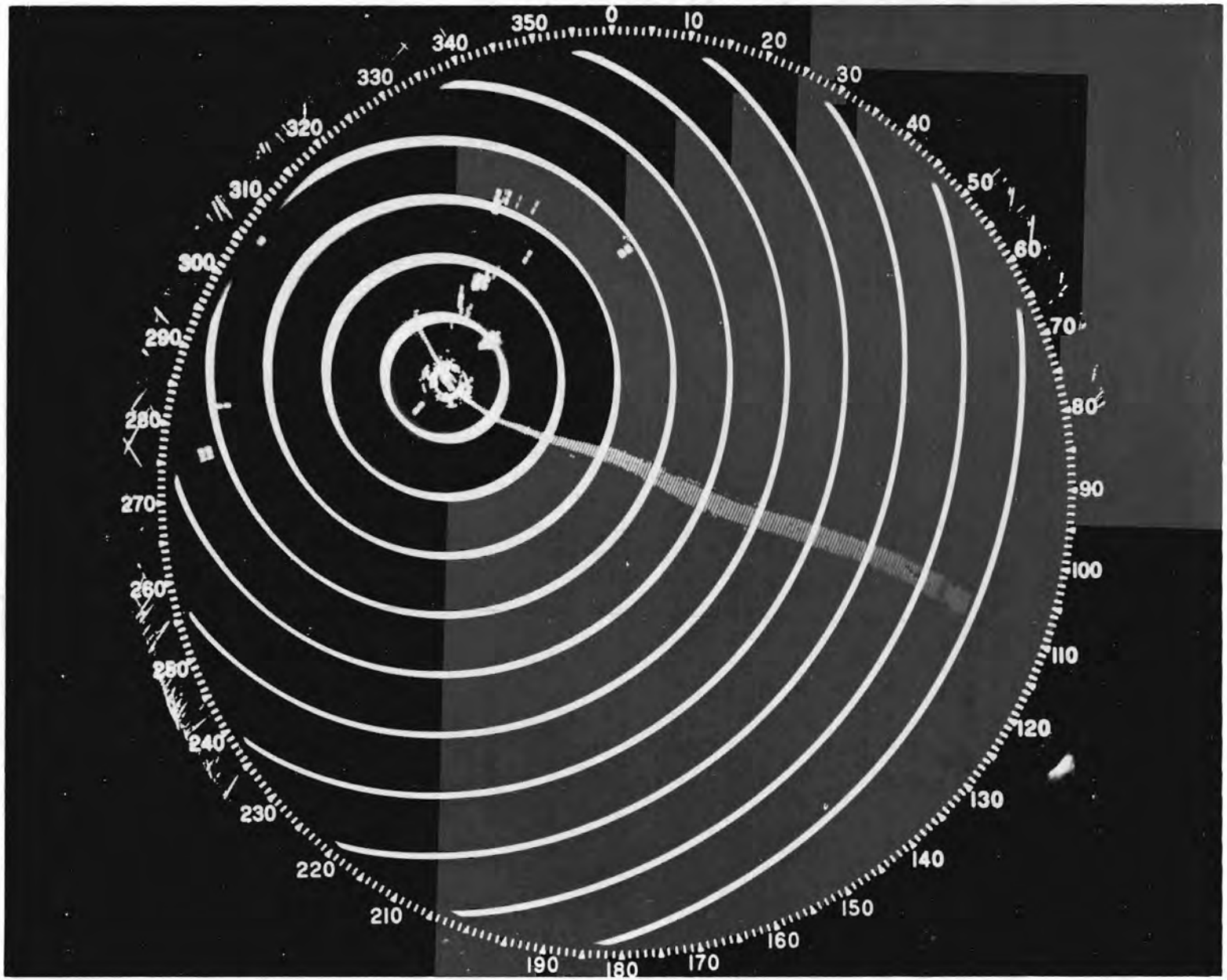

FIGURE 20. NAFEC FLIGHT TEST DATA USING THE NADIF ANTENNA ASSEMBLY MODIFICATION WITH 22-INCH VERTICAL SEPARATION AND A 90° PHASE DELAY

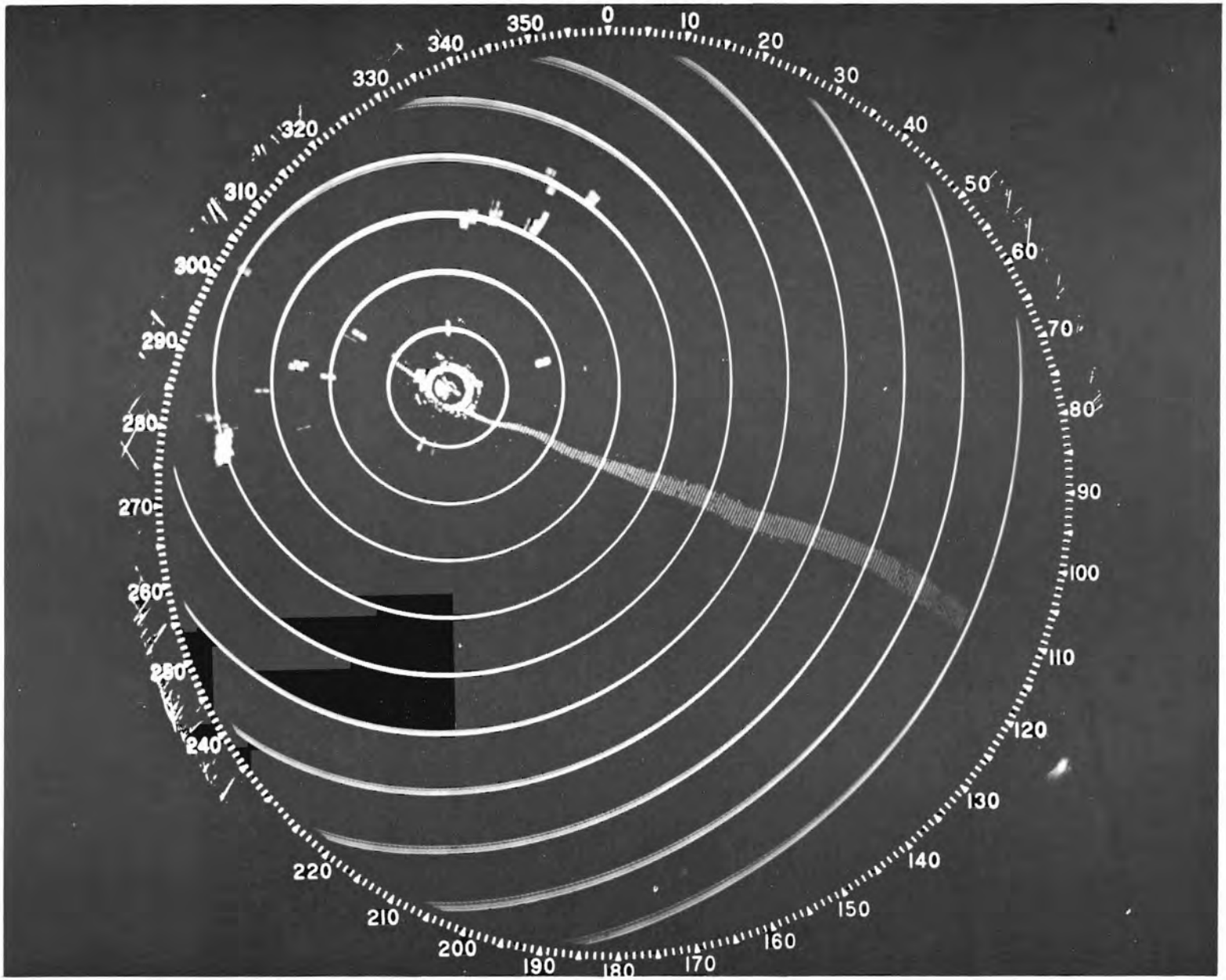

FIGURE 21. NAFEC FLIGHT TEST DATA USING THE NADIF ANTENNA ASSEMBLY MODIFICATION WITH 22-INCH VERTICAL SEPARATION, UNEQUAL POWER AT 1030 MHz AND 1090 MHz, AND A 60° PHASE DELAY

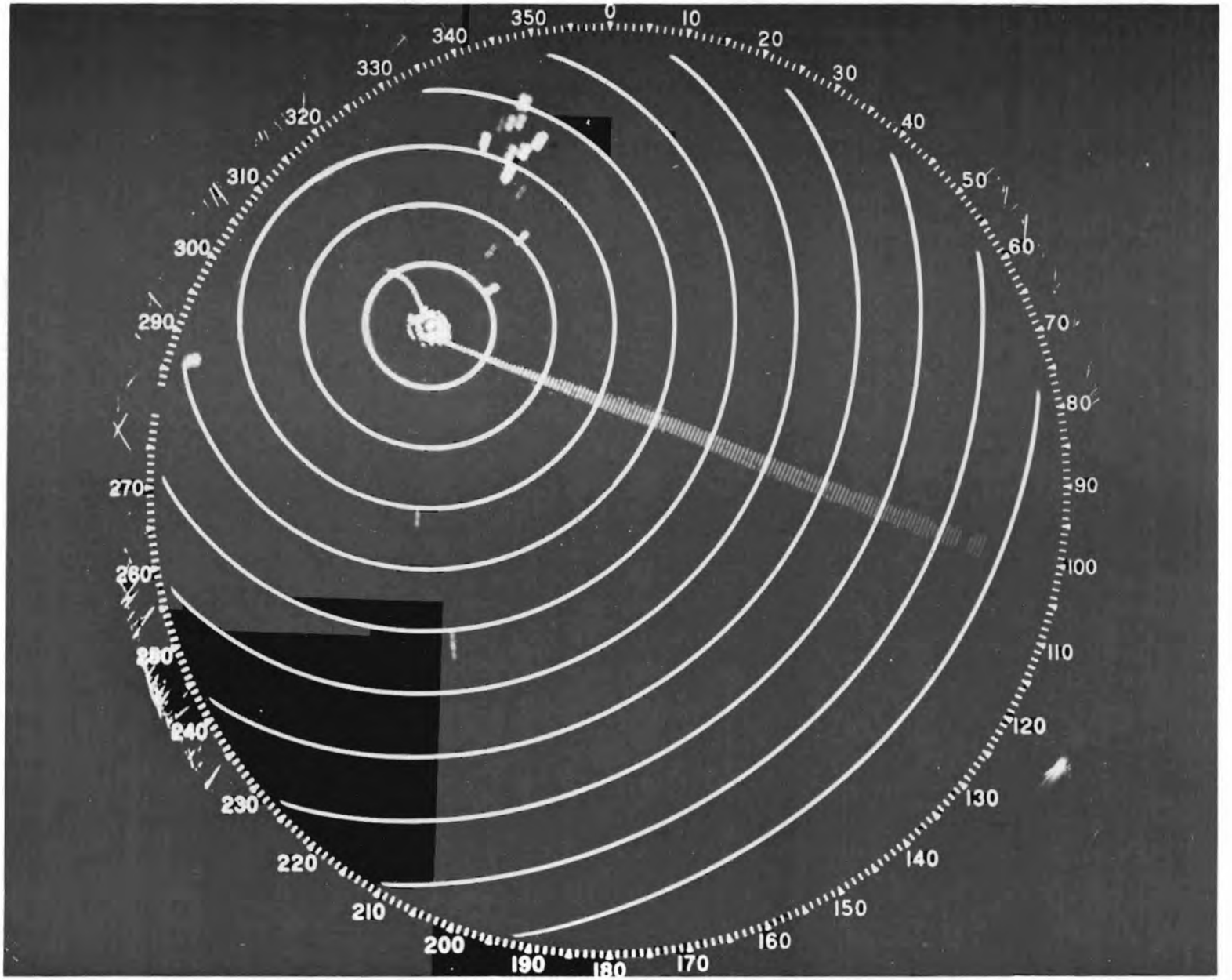

FIGURE 22. NAFEC FLIGHT TEST DATA USING THE NADIF ANTENNA ASSEMBLY MODIFICATION WITH 22-INCH VERTICAL SEPARATION, EQUAL POWER AT 1030 MHz AND 1090 MHz, AND A 60° PHASE DELAY

The last test using the NADIF antenna assembly was identical to the previous test with the exception that a 45° phase delay was used between the upper and lower pairs of dipole antennas. The results of this test were approximately the same as the results of the previous test (figure 23). Once again, the radar beacon coverage was poor at ranges beyond 180 nmi during a typical flight test using this configuration.

The test configuration that resulted in continuous radar beacon coverage at all ranges utilized a 30-dB difference in signals, at 1030 MHz, between the upper and lower pair of dipole antennas. Since the signal being fed to the upper pair of dipole antennas was so insignificant, it was thought that satisfactory results might also be obtained if the upper pair of dipole antennas were eliminated altogether. Figure 24 shows the results of a typical flight test using just a single pair of dipole antennas installed 11 inches below the vertical center of the radar feed horn. The results of this test show fairly good radar beacon coverage except at the range of approximately 190 nmi where some replies were missed. The loss of coverage at the approximate range of 190 nmi was repeated on other flight tests using the single pair of dipole antennas mounted below the radar feed horn.

Table 1 contains a summary of the radar beacon antenna configurations that were tested at the Elwood, New Jersey, En Route Radar Site.

NORTH PLATTE TESTS

ANTENNA INSTALLATION AND CHECKOUT AT NORTH PLATTE.

The basic intent of the flight tests that were conducted at NAFEC was to identify the ARSR-2 antenna primary radar beacon feed configurations that would be expected to function best at North Platte. Since the terrain in the vicinity of the NAFEC site was completely different from the terrain in the vicinity of the North Platte site, the data gathered at NAFEC could not be considered anything more than a guide, particularly when the problem at North Platte was directly related to the terrain surrounding the site.

The ARSR-2 Antenna modifications that were tested at the North Platte facility were installed using RG-218/U coaxial cable to connect the modification to the radar beacon channel of the rotary joint. The standard directional antenna was disconnected at the rotarty joint and an EIA to HN adapter was installed in place of the EIA connector normally used with the standard directional antenna low-loss cable. This same procedure had also been used prior to the testing that was conducted at the NAFEC Elwood ARSR-2 facility.

During the initial installation and checkout that took place at North Platte, the week of November 27, five different antenna configurations were installed and evaluated. The evaluation was conducted by recording data on aircraft "targets of opportunity" that flew within the coverage area of the North

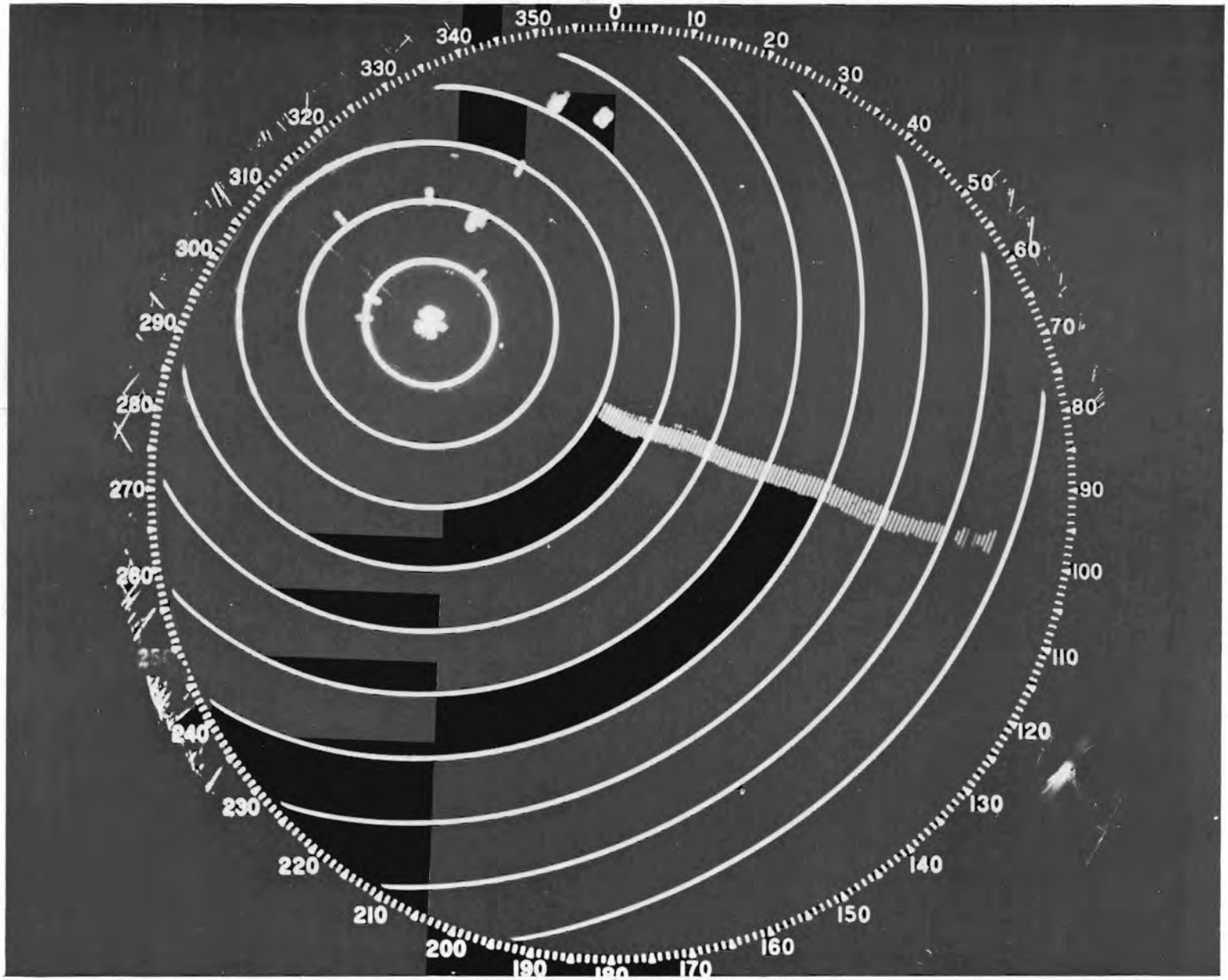

FIGURE 23. NAFEC FLIGHT TEST DATA USING THE NADIF ANTENNA ASSEMBLY MODIFICATION WITH 22-INCH VERTICAL SEPARATION, EQUAL POWER AT 1030 MHz AND 1090 MHz, AND A 45° PHASE DELAY

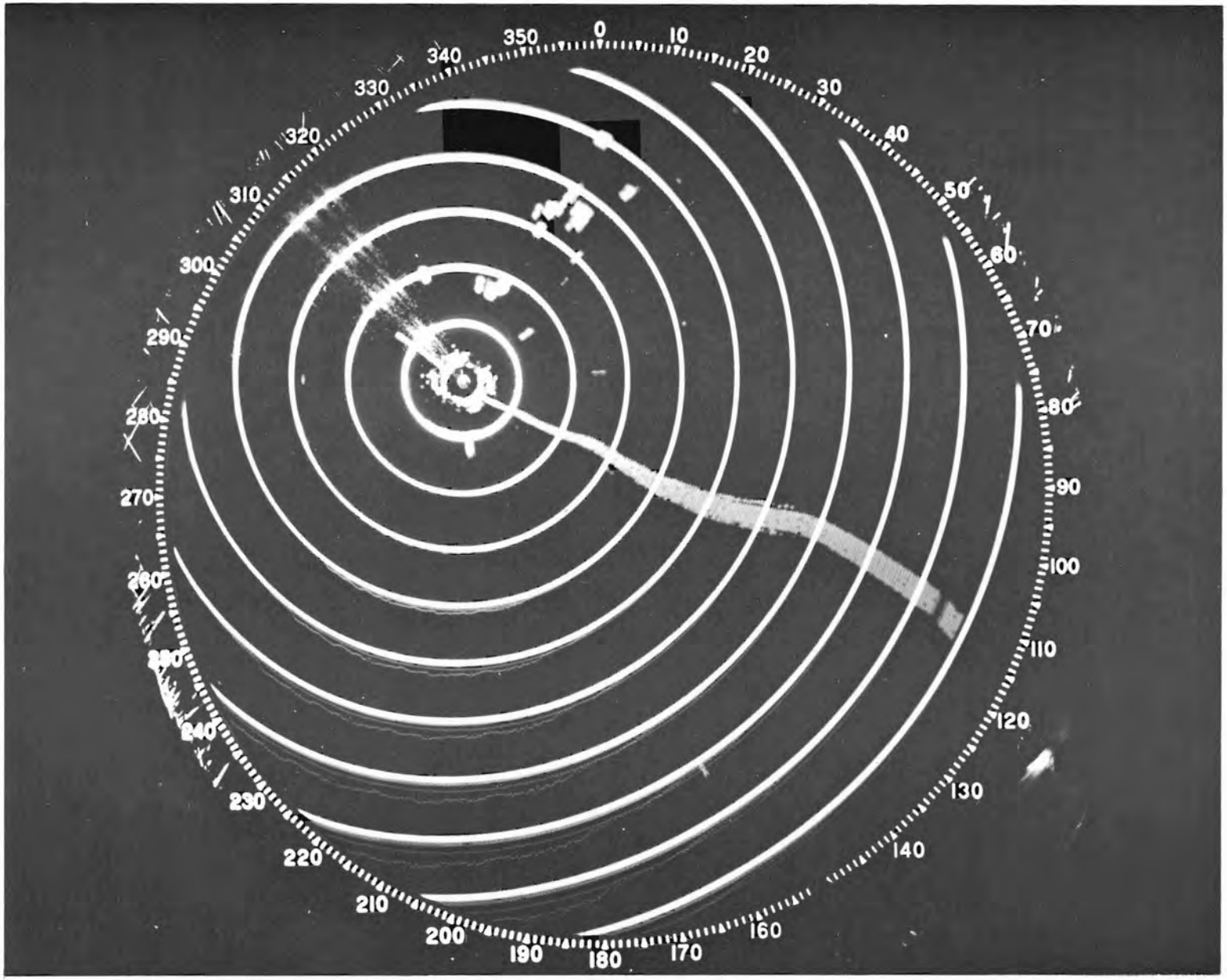

FIGURE 24. NAFEC FLIGHT TEST DATA USING A SINGLE PAIR OF DIPOLE ANTENNAS MOUNTED BELOW THE RADAR FEED HORN

TABLE 1. SUMMARY OF RADAR BEACON ANTENNA CONFIGURATIONS FLIGHT TESTED AT NAFEC

Test No.	Type of Antenna configuration	Number of tests for which there was useable data	Vertical center-to-center spacing between antennas (inches)	Ratio of energy fed to the lower & upper dipole antennas 1030 MHz	1090 MHz	Relative phase delay of lower dipole (degrees)
1	Standard directional antenna	4				
2	CPN-18 assembly mounted above the radar feed horn	5	19			
3	CPN-18 assembly mounted below the radar feed horn	9	19			
4	NADIF antenna assembly	10	27	- 6 dB	- 6 dB	90
5	NADIF antenna assembly	5	22	-30 dB	-15 dB	90
6	NADIF antenna assembly	3	22	-30 dB	-15 dB	60
7	NADIF antenna assembly	5	22	-20 dB	-20 dB	60
8	NADIF antenna assembly	2	22	-20 dB	-20 dB	45
9	Single pair of dipole antennas mounted below the radar feed horn	3	11			

Platte facility. The tests were, subjective by nature, being highly dependent on a visual assessment of the displayed beacon replies. The five antenna configurations that were evaluated at the North Platte facility were as follows:

1. CPN-18 assembly installed below the radar feed horn,
2. NADIF antenna assembly using 22-inch spacing, -30 dB at 1030 MHz, -15 dB at 1090 MHz, and a 60° delay,
3. NADIF antenna assembly using 22-inch spacing, -30 dB at 1030 MHz, -15 dB at 1090 MHz, and a 90° delay,
4. Single pair of dipole antennas installed 11 inches below the center of the radar feed horn, and
5. NADIF antenna assembly using 22-inch spacing, -20 dB at 1030 MHz, -20 dB at 1090 MHz, and a 60° delay.

Prior to the installation and checkout of the ARSR-2 antenna modifications, the North Platte ATCBI-3 interrogator was measured and adjusted, where necessary, to assure compliance with the U.S. National Aviation Standard for the Mark X (SIF) Air Traffic Control Radar Beacon System (ATCRBS) characteristics. Channel 1 (serial No. 94.1) of the interrogator was used during the test period, and the parameters of the interrogator measured as follows:

Peak Transmitter Power to the Directional Antenna	1,000 Watts
Reflected Peak Power from the Directional Antenna	57.5 Watts
Peak Transmitted Power to the Omnidirectional Antenna	2,290 Watts
Reflected Peak Power from the Onmidirectional Antenna	123 Watts
Pulse Widths of P_1, P_2, and P_3	0.8 μs
P_1 - P_2 Pulse Spacing	2.0 μs
P_1 - P_3 Pulse Spacing	
Mode 3/A	8.0 μs
Mode C	21.0 μs
Receiver Tangential Sensitivity	-90 dBm
Receiver Sensitivity Time Control (STC) Curve	40 dB

Test data for the North Platte facility were recorded photographically at the Denver Center. One photograph was taken of the PPI display, associated with the North Platte system, for each antenna rotation (six per minute). Analysis of the results of each ARSR-2 antenna modification was made from observations during the testing and from an evaluation of the photographic data at NAFEC.

The first tests that were conducted at the North Platte facility utilized the standard directional antenna. These tests served primarily as a reference and once again identified the areas where terrain-reflected radar beacon replies occurred. During these tests, terrain-reflected replies were noted over the entire coverage area of the PPI display. However, the terrain-reflected replies were more predominant in the southeast sector of the coverage area. This, once again, confirmed the reflected reply problem, reported by the ATC personnel, that existed in the Hill City intersection area. No photographic data were recorded during the period when the standard directional antenna was tested because of a malfunction of the PPI display at the Denver Center. The problem with the PPI display was corrected prior to the start of the testing which utilized the ARSR-2 antenna modifications.

The first ARSR-2 antenna modification that was tested at the North Platte facility was the CPN-18 dipole feed assembly mounted below the radar feed horn. The center of the CPN-18 dipole feed assembly was 19 inches below the vertical center of the radar feed horn. This antenna configuration should have positioned the maximum of the vertical radiation pattern of the antenna well above the horizon and should have caused marginal coverage at long ranges.

The loss of coverage at long ranges was confirmed by observation of targets-of-opportunity during the testing with the CPN-18 dipole feed assembly mounted below the radar feed horn. The loss of replies occurred at ranges between 100 to 200 nmi at all azimuths. Some sidelobe returns were observed at ranges between 20 and 40 nmi, but the sidelobe returns did not appear to be much of a problem. Apparently the vertical pattern of this ARSR-2 antenna modification matched the omnidirectional antenna pattern and provided satisfactory sidelobe suppression (SLS) operation. The overhead coverage varied from 6 to 14 nmi in diameter at altitudes between 8,000 and 39,000 feet. The air traffic controllers at the Denver Center obtained altitude data on all aircraft flying in the vicinity of the North Platte site, but only a small number of aircraft could be diverted so that the aircraft could be flown directly over the site.

The second ARSR-2 antenna modification that was tested at the North Platte facility consisted of the NADIF antenna assembly installed with a center-to-center vertical separation of 22 inches between the upper and lower pairs of dipole antennas. This same vertical separation of 22 inches was used for all three of the NADIF antenna assembly ARSR-2 antenna modifications. Only the power distribution and phase delay between the upper and lower pair of dipole antennas were changed for each test.

The first tests that were conducted at North Platte using the NADIF antenna assembly utilized a 30-dB difference in the power distribution at 1030 MHz between the upper and lower pair of dipole antennas and a 15-dB difference in the received power at 1090 MHz. The power distributions were obtained by setting the 1030-MHz phase shifter of the power divider network on a dial reading of 167 and the 1090-MHz phase shifter on a dial reading of 152. In all of the tests at North Platte, the power fed to the lower pair of dipole antennas was always equal to or greater than the power fed to the upper pair of dipole antennas.

The phase difference between the upper and lower pair of dipole antennas was set at a 60° phase delay for the first tests using the NADIF antenna assembly. The 60° phase delay was obtained by varying the length of the coaxial cables that fed the upper and lower pairs of dipole antennas. The coaxial cable that fed the upper pair of dipole antennas was the phase reference in all cases, while the coaxial cable that fed the lower pair of dipole antennas was constructed slightly longer to provide the required phase delay.

From the observation of targets-of-opportunity, it was concluded the NADIF antenna assembly modification, using a 30-dB power difference at 1030 MHz and a 15-dB power difference at 1090 MHz, provided very good coverage. There were sidelobe returns when the peak power input to the NADIF antenna assembly modification was set at 1,000 watts, and some sidelobe returns still remained when the peak power was reduced to 700 watts. The peak power input to the NADIF antenna assembly was not reduced any further at this time.

The second tests that were conducted at the North Platte facility using the NADIF antenna assembly utilized the same power distribution as the previous test, but a 90° phase difference was used between the upper and lower pairs of dipole antennas in lieu of a 60° phase difference.

From the observation of targets-of-opportunity, it was concluded that this NADIF antenna assembly configuration also provided very good coverage. There were occasional sidelobe returns at ranges between 6 and 15 nmi, with a peak power input of 1,000 watts. However, when the peak power input to the NADIF antenna assembly was reduced to 700 and 500 watts, very few sidelobe returns were recorded, and none of these sidelobe returns extended beyond 7 nmi in range.

The next ARSR-2 antenna modification that was tested at the North Platte facility was the single pair of dipole antennas installed below the radar feed horn. This ARSR-2 antenna modification utilized a peak power input of 700 and 500 watts. From the observation of targets-of-opportunity, using this modification, it was concluded that radar beacon coverage was sometimes marginal from 185 to 200 nmi. The sidelobe returns that were recorded when the single pair of dipole antennas were tested seemed to occur at shorter ranges, but they extended over a wider azimuth arc.

The last ARSR-2 antenna modification that was tested at the North Platte facility utilized the NADIF antenna assembly with a 20-dB power difference at both 1030 and 1090 MHz between the upper and lower pair of dipole antennas. A 60° phase difference was utilized during this test between the upper and lower pair of dipole antennas. Observation of targets-of-opportunity during this flight test showed that coverage was good, but some loss of replies was noted beyond 190 nmi. There were very few sidelobe returns, but this was thought to be partially due to the 500-watt input to the NADIF antenna assembly that was used during the testing of this antenna configuration.

Additional tests were rerun with the NADIF antenna assembly utilizing a 30-dB difference in the power distribution at 1030 MHz and a 15-dB difference in the received power at 1090 MHz. The phase difference between the upper and lower pairs of dipole antennas was set at 60°, and the power was varied during the testing between 700 and 500 watts. The testing was repeated using this antenna modification to see if reducing the power to 500 watts would eliminate the sidelobe returns that were observed with a power input of 700 watts. Observation of targets-of-opportunity during the testing confirmed that the reduction of power to 500 watts did reduce the sidelobe returns to the point where they were no longer a problem. No loss of coverage was noticed with this modification.

In summarizing the results of the installation and checkout of the various antenna configurations at the North Platte facility, it can be said that the coverage directly over the site was very good using all five of the ASRS-2 antenna modifications. Therefore, the question of which antenna configuration was best could not be decided on the basis of overhead coverage. The three NADIF antenna assembly modifications that were tested did provide noticeably better long-range coverage than the CPN-18 dipole feed assembly and the single pair of dipole antennas installed below the radar feed horn. However, it was necessary to increase the power input to the omnidirectional antenna to 2,000 watts and reduce the power input to the NADIF antenna assembly to 500 watts to eliminate the problem of sidelobe returns. This was done in lieu of developing a new omnidirectional antenna that would provide the same vertical coverage as the ARSR-2 antenna modifications. A comparison of the results of the testing of the three NADIF antenna assembly modifications showed that the two configurations that used a 30-dB difference in power at 1030 MHz and a 15-dB difference in power at 1090 MHz were slightly better than the configuration that used a 20-dB power difference at both 1030 and 1090 MHz.

It was rather difficult to differentiate between the results of the testing of the two NADIF antenna assembly modifications that remained. This was probably due to the fact that the only difference between the two configurations was the phase difference being fed to the upper and lower pairs of dipole antennas, and this phase difference was only 30°. After due deliberation, it was mutually agreed that the NADIF antenna assembly modification that was best, utilized a 30-dB difference at 1030 MHz, a 15-db difference at 1090 MHz, and a 60° delay between the upper and lower pair of dipole antennas.

NORTH PLATTE FLIGHT TESTS.

Low- and high-altitude flight tests were conducted at the North Platte facility during the week of December 18, 1972, to determine the radar beacon coverage of the NADIF antenna assembly modification. The low-altitude flight tests were conducted on December 19 and 20, using Flight Inspection Aircraft N-51, a Douglas DC-3 from Kansas City, Missouri. The high-altitude flight tests were conducted on December 21, using Flight Inspection Aircraft N-125K, a Jet Commander, type AC-21, from Oklahoma City, Oklahoma. A temporary waiver for a nonstandard installation was granted the North Platte site prior to the flight testing. Continuance of the temporary waiver until April 1973 was based on satisfactory completion of the flight inspection.

All flight tests were conducted with the power divider network, 1030-MHz phase shifter set at 167 and the 1090-MHz phase shifter set at 152. A coaxial cable with a 60° relative phase delay was installed from the power divider network to the bottom pair of dipole antennas, while a standard (zero-degree relative phase delay) coaxial cable was installed from the power divider network to the top pair of dipole antennas. The vertical spacing between the centers of the upper and lower pairs of dipole antennas measured 22 inches during all of the flight tests.

Reply code 2500 was used to respond to mode 3/A interrogations by both the low- and high-altitude flight test aircraft. The use of an exclusive reply code by the flight test aircraft provided a means by which the replies from other aircraft could be prevented from appearing on the PPI display during the flight testing.

Channel No. 1 of the ATCBI-3 interrogator was used during all of the flight testing that was performed on the North Platte facility. The parameters of channel No. 1 of the ATCBI-3 interrogator were measured prior to the flight tests and recorded as follows:

Transmitter Peak Power	
P_1 Pulse	500 Watts
P_2 Pulse	912 Watts
P_1 Pulse Width	0.8 μs
P_2 Pulse Width	0.8 μs
P_3 Pulse Width	0.8 μs
P_1 - P_2 Pulse Spacing	2.0 μs
Mode Operation	XY
P_1 - P_3 Pulse Spacing	
Mode 3/A	8.0 μs
Mode C	21.0 μs
Receiver Tangential Sensitivity	-88 dBm
Receiver Sensitivity Time Control (STC) Curve	40 dB
Defruiter Operating Mode	Double Defruit
Defruiter Acceptance Gate	2.5 μs
Sidelobe Suppression Operation	Improved SLS

Data were also recorded on the Flight Inspection aircraft (N-51) transponder as follows:

Transponder Type	TRU-1
Transponder Serial Number	70
Power Output	520 Watts
Transponder Minimum Triggering Level	
Normal Sensitivity	-77.5 dBm
Low Sensitivity	-70.5 dBm
Coaxial Cable Attenuation	1.3 dB
Date of Last Calibration (Oklahoma City)	Nov. 20, 1972

A large portion of the low- and high-altitude flight tests that were performed on the North Platte facility were conducted on the 268° radial of the site. The 268° radial had been used almost exclusively during the original commissioning flight testing of the North Platte radar beacon. Therefore, detailed data were available that could be used to compare the operation of the standard radar beacon directional antenna with the NADIF antenna assembly modification.

During the high-altitude flight tests, a test was conducted to determine the final peak power output setting for the ATCBI-3 interrogator. The test was conducted south of the site at 200 nmi at an altitude of 35,000 feet. The Flight Inspection aircraft (N125K) transponder was set on low sensitivity while the peak power output of the ATCBI-3 interrogator was reduced until the reply from the aircraft became marginal. The peak power output of the ATCBI-3 interrogator was then increased by 1 dB and the Flight Inspection aircraft transponder was returned to normal sensitivity for the remainder of the flight testing. The final peak power output setting of the ATCBI-3 interrogator was approximately 500 watts after the 1-dB increase.

Figure 25 shows the routes and flight test altitudes that were flown during the low-altitude flight tests on December 20. The low-altitude tests were made at altitudes between 1,000 and 10,000 feet above the mean sea level elevation (3,162 feet) of the site.

RESULTS OF THE NORTH PLATTE FLIGHT TESTS.

During the low-altitude flight tests that were conducted on September 19, replies were recorded due to sidelobe interrogations. The sidelobe replies were recorded at 5, 9, 17, 21, 28 and 35 nmi from the site on the 268° radial. Because of the symmetry of the sidelobe replies, it was suspected that the omnidirectional antenna vertical radiation pattern was being varied by vertical lobing caused by reflections from the terrain in the vicinity of the North Platte site. To overcome the sidelobe reply problem, the power input to the omnidirectional antenna was increased from 912 watts to 2,000 watts. This was accomplished by changing from improved SLS (ISLS) to normal SLS and attenuating the directional antenna output. This same modification had been required during the testing of the CPN-18 antenna at North Platte in 1971.

Whenever a modification is performed that changes the vertical radiation pattern of either the directional or omnidirectional antennas, the vertical radiation pattern of the antenna that has not been modified (in this case, the omnidirectional antenna) will differ from the vertical radiation pattern of the antenna that has been modified. Therefore, the one antenna is subject to vertical lobing while the other is not. In reality, the omnidirectional antenna that was installed at North Platte should have been modified to provide a vertical radiation pattern identical to the directional antenna. However, time did not allow for the development of an improved omnidirectional antenna and the power input to the omnidirectional antenna was increased to 2,000 watts to overcome the sidelobe return problem.

An omnidirectional antenna was designed in early 1971 by NAFEC and developed by the University of Michigan that had a vertical radiation pattern similar to the pattern required. With a moderate modification, this onmidirectional antenna could be adapted to meet the need of matching the vertical radiation pattern of the NADIF antenna assembly modification.

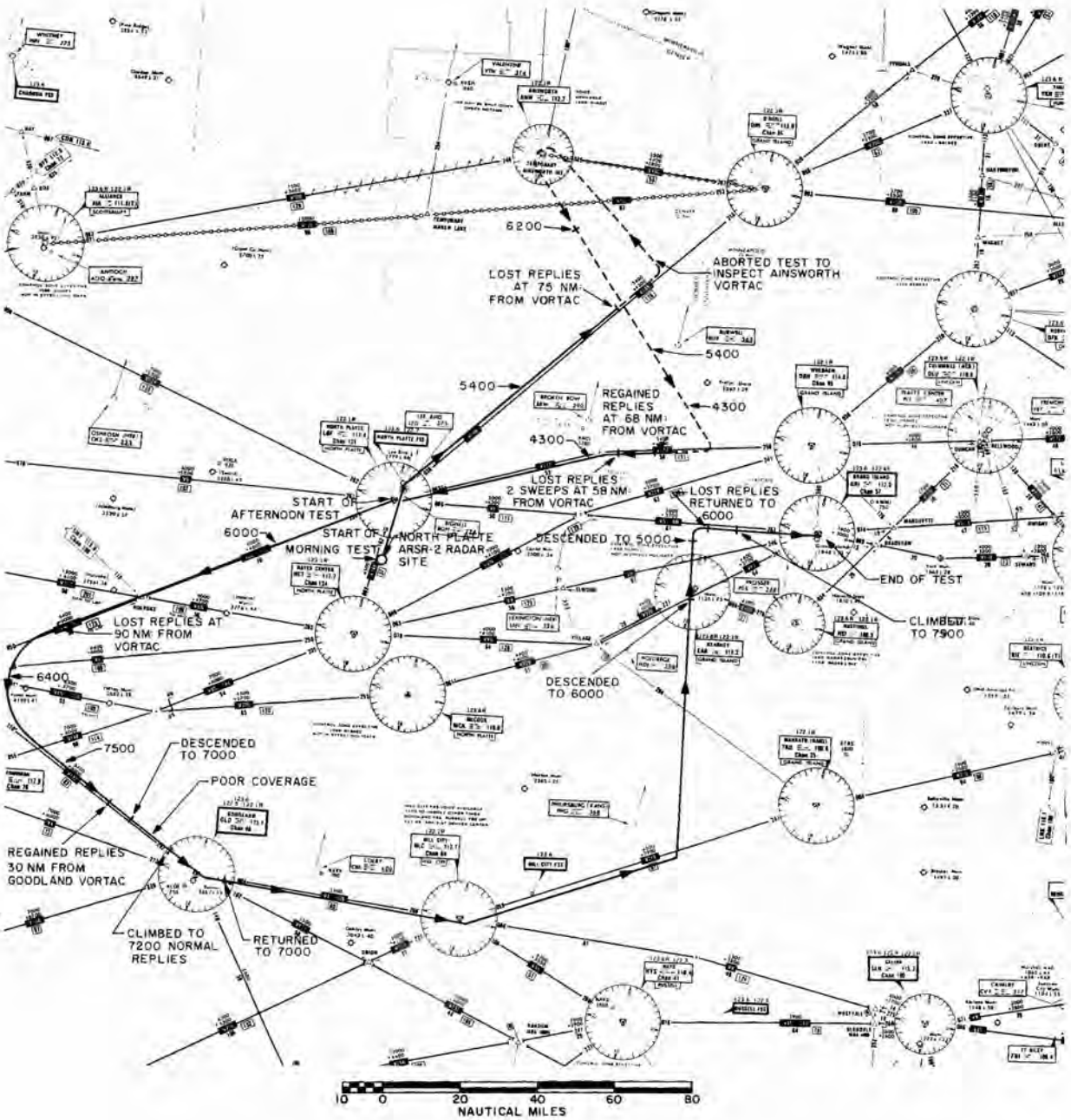

FIGURE 25. LOW-ALTITUDE FLIGHT TEST ROUTES FLOWN ON DECEMBER 20, 1972

An inquiry was made in February 1973 (during the time that this report was being written) to determine if an improved onmidirectional antenna was needed at the North Platte facility to eliminate any existing sidelobe return problems. Mr. Jack Condon of the Rocky Mountain Region stated that there had not been any complaints concerning sidelobe returns by the air traffic controllers that utilized the North Platte system at the Denver Center. He also stated that an improved omnidirectional antenna might be required if it was difficult to maintain the 2,000 watt input to the standard omnidirectional antenna at the North Platte facility.

Mr. William Look, Chief of the North Platte facility, stated on February 26, 1973, that there has been no problem maintaining the 2,000 watt input to the omnidirectional antenna. This is undoubtedly due to the "four-cavity" modification that was previously installed on the ATCBI-3 interrogator at the North Platte facility.

During the low-altitude flight tests that were conducted on December 20 at North Platte, nonsynchronous replies were recorded at random positions on the PPI display. Some of the nonsynchronous replies were displayed at such odd angles, relative to the smooth arc of the normal beacon replies, that the ability of the defruiter to reject some of these nonsynchronous replies was questioned. The nonsynchronous replies could not have been due to "second-time-around" replies since a mode interlace ratio of 1:1 was used between modes 3/A and C.

An investigation of the beacon video defruiting equipment, type FA-6140, revealed that the acceptance gate of the defruiter was adjusted to 2.5 μs in duration. Even though the acceptance gate setting of 2.5 μs was in agreement with normal maintenance procedures, improved operation had been obtained at NAFEC when the acceptance gate had been reduced to 1.5 μs duration in the same type of defruiting equipment. An acceptance gate as narrow as 1.0 μs had been used in the quartz delay line defruiter that was installed at NAFEC, but the acceptance gate eventually had to be increased to 1.5 μs because it was difficult to maintain system operation with the acceptance gate reduced to 1.0 μs. When the defruiter acceptance gate was reduced at North Platte to 1.5 μs, a definite decrease was noted in the number of nonsynchronous replies that were displayed.

Some nonsynchronous replies remained after the defruiter acceptance gate was reduced. The nonsynchronous replies that remained were thought to be caused by near-synchronous interference from adjacent sites. The severity of the near-synchronous interference seemed to reach a maximum between 10:30 and 12:00 a.m. and manifested itself in the form of "strobing" or "radial replies" that were recorded on the PPI display.

During the investigation of the defruiter acceptance gate mentioned earlier, it was noted that the defruiter was operated in the "double defruit mode." The double defruit mode requires coincidence between three consecutive video reply pulses with identical mode interrogations before an output can be obtained from the defruiter. Because of the increased probability of losing

portions of desired beacon replies, the double defruit mode should only be used in cases of extreme interference. The use of double defruit mode in the defruiter seemed to indicate that there was a radar beacon interrogator within the coverage area of the North Platte site that had a pulse repitition frequency (PRF) very close to the North Platte interrogator PRF of 365.

In 1970, NAFEC was asked to investigate an interference problem at the Trevose, Pennsylvania, ARSR-2 enroute site. Because of the severity of the nonsynchronous replies, it was assumed that the interference was caused by a nearby radar beacon interrogator that was operating on essentially the same PRF of 365. The problem was traced to the MPN-14 GCA radar at the Dover, Delaware, Air Force Base. The MPN-14 interrogator was designed to "countdown" 4:1 from the radar PRF of 1100, but it was erroneously counting down 3:1. It was found that the improper countdown of PRF was an inherent problem with the MPN-14 GCA radar. If there is an MPN-14 GCA radar within the coverage area of the North Platte radar beacon site, this GCA radar site could be the source of the interference.

Figure 26 shows a 200-nmi (20-nmi range marks) PPI display of the North Platte system video with the NADIF antenna assembly modification installed. Three of the beacon replies that are shown in figure 26 are broken. They were displayed at

Range (nmi)	Azimuth (degrees)
181	52
182	148
79	170

It was thought that the breaks that were recorded in the radar beacon replies were due to near-synchronous interference and the use of the double defruit mode in the quartz delay-line defruiter.

During the testing that took place at the North Platte facility, a question arose over the relative displayed positions of the radar and radar beacon returns. In some instances, the center of the radar beacon return was displaced counterclockwise from the center of the radar return. This problem was finally traced to the use of "integrated video" on the radar. When integrated video is used on the radar, it causes the radar video to be delayed in both range and azimuth. The delay that was caused by use of the integrated video on the radar was more noticeable when compared with the narrow replies that resulted from the NADIF antenna assembly modification than when compared to the wide replies that resulted from the standard directional antenna.

The results of the low-altitude flight tests that were conducted on December 20 along the low-altitude airway structure in the vicinity of North Platte are shown in figure 25. The remarks that are included in figure 25 tend to show the extent of the coverage and the altitude and range at which the coverage was lost. The results of the low-altitude flight tests that were conducted on the 268° radial of the site are not included in Figure 25.

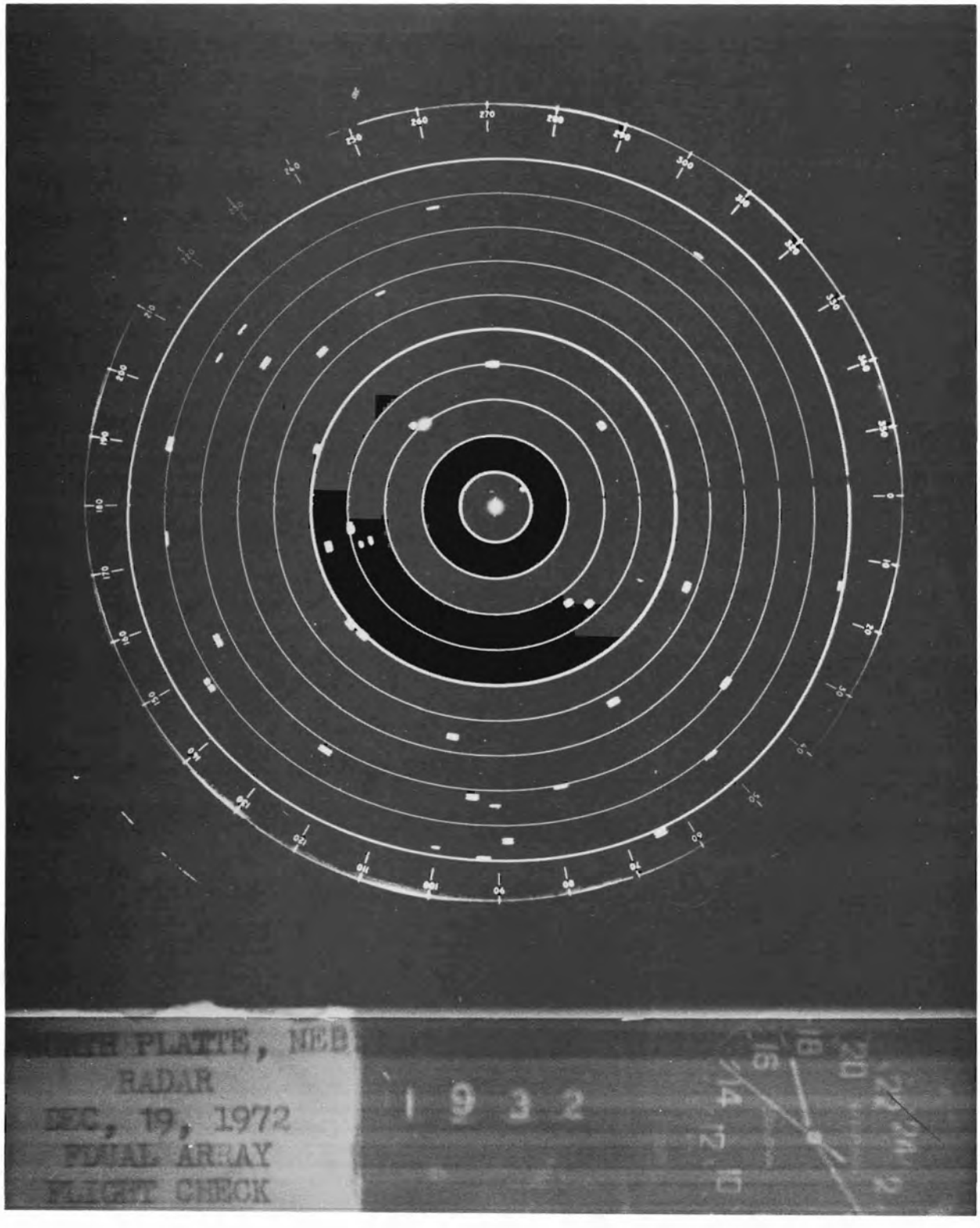

Figure 26. NORTH PLATTE SYSTEM VIDEO WITH THE NADIF ANTENNA ASSEMBLY MODIFICATION INSTALLED

The results of the low-altitude flight tests that were conducted on the 268° radial of the North Platte facility on December 19 and 20, using the NADIF antenna assembly modification are shown in figure 27. The upper portion of figure 27 shows the results of the flight tests that were performed to determine the outer coverage limits, while the lower portion of figure 27 shows the results of the flight tests that were performed to determine the inner coverage limits. During all of these tests, the radar beacon video was "blanked out" from the center of the display to a range of 2 1/2 nmi to prevent the radar "main bang", that was induced into the radar beacon channel, from being displayed. All of the flight test altitudes were above the mean sea level elevation (3,162 feet) of the North Platte site starting with 1,000 feet and ending at 10,000 feet.

The outer coverage limits were found by flying the Flight Inspection aircraft outbound on the 268° radial of the site at an altitude 1,000 feet above the site elevation until the beacon replies from the aircraft were lost. The Flight Inspection aircraft was then climbed an additional 1,000 feet and flown outbound at this new altitude until the beacon replies from the aircraft were lost once again. This process was continued until the beacon replies from the aircraft were lost at an altitude 10,000 feet above the site elevation (13,162 feet). At this point, the Flight Inspection aircraft was flown back to the North Platte site to check the inner coverage limits.

The inner coverage limits of the North Platte facility, with the NADIF antenna assembly modification installed, were determined by flying directly over the site at altitudes between 1,000 and 10,000 feet above the site elevation. The range was recorded at each 1,000-foot increment where the beacon replies from the Flight Inspection aircraft were lost and where the beacon replies were regained on the other side of the site.

The results of the high-altitude flight tests that were conducted on the 268° radial of the North Platte facility on December 21 using the NADIF antenna assembly modification are shown in figure 28. The upper portion of figure 28 shows the results of the flight tests that were performed to determine the outer coverage limits, while the lower portion of figure 28 shows the results of the flight tests that were performed to determine the inner coverage limits. All of the flight test altitudes were above the mean sea level elevation (3,162 feet) of the North Platte site starting with 1,000 feet and ending at 40,000 feet. The flight tests between 1,000 and 10,000 feet were made in 1,000-foot increments, while the flight tests between 10,000 and 40,000 feet were made in 5,000-foot increments.

Table 2 shows the results of the low- and high-altitude flight tests that were performed on the 268° radial to determine the outer coverage limits. Two different Flight Inspection aircraft were used for the low- and high-altitude flight tests, and these tests were performed over a period of 3 days, December 19, 20, and 21. When the maximum range of the outer coverage limits of the low- and high-altitude aircraft of table 2 were compared, the recorded data showed a near-perfect match. The only difference that occurred was at the altitude of 2,000 feet above the site elevation of 3,162 feet.

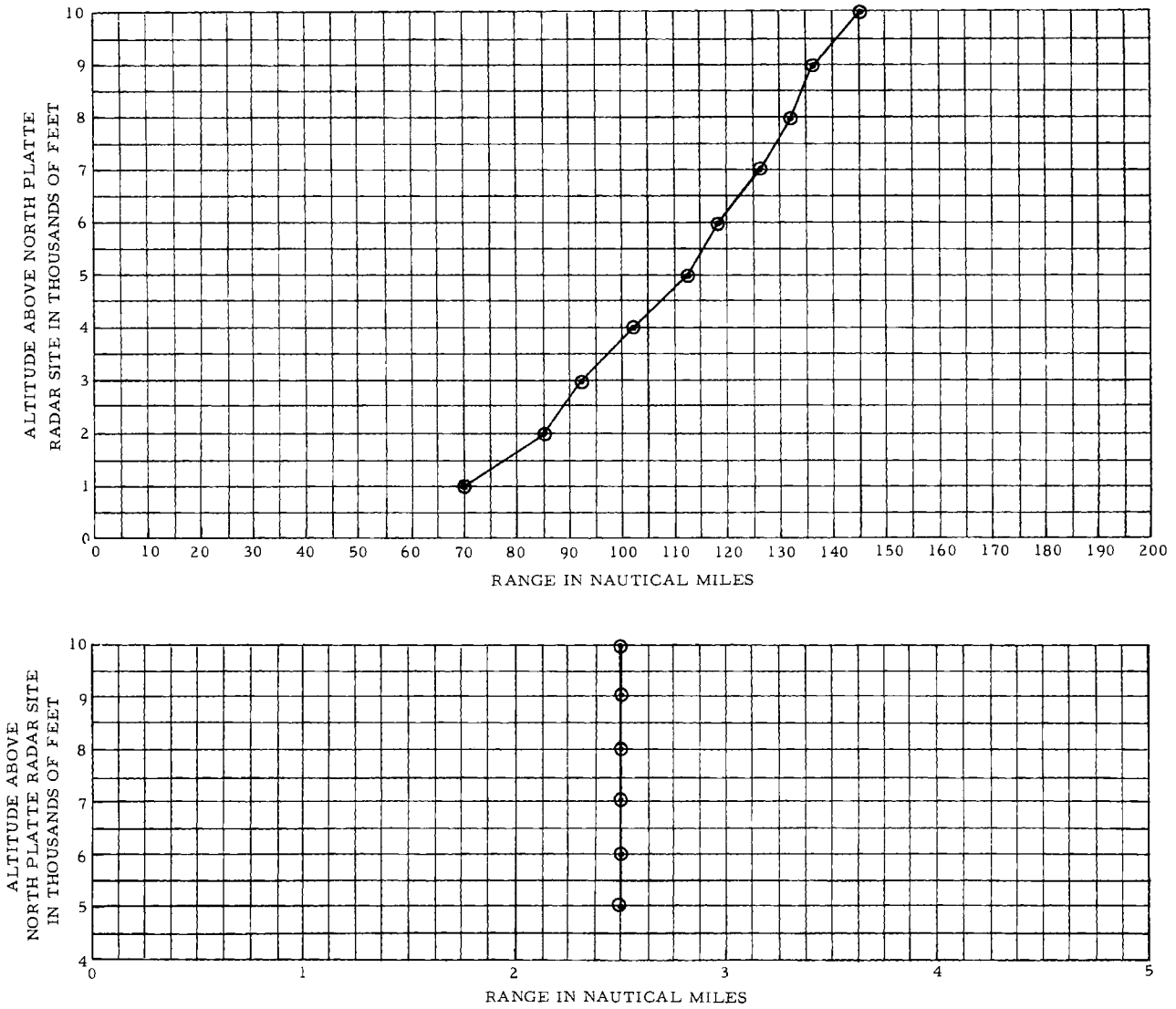

FIGURE 27. COVERAGE LIMITS MEASURED DURING THE LOW-ALTITUDE FLIGHT TESTS AT NORTH PLATTE

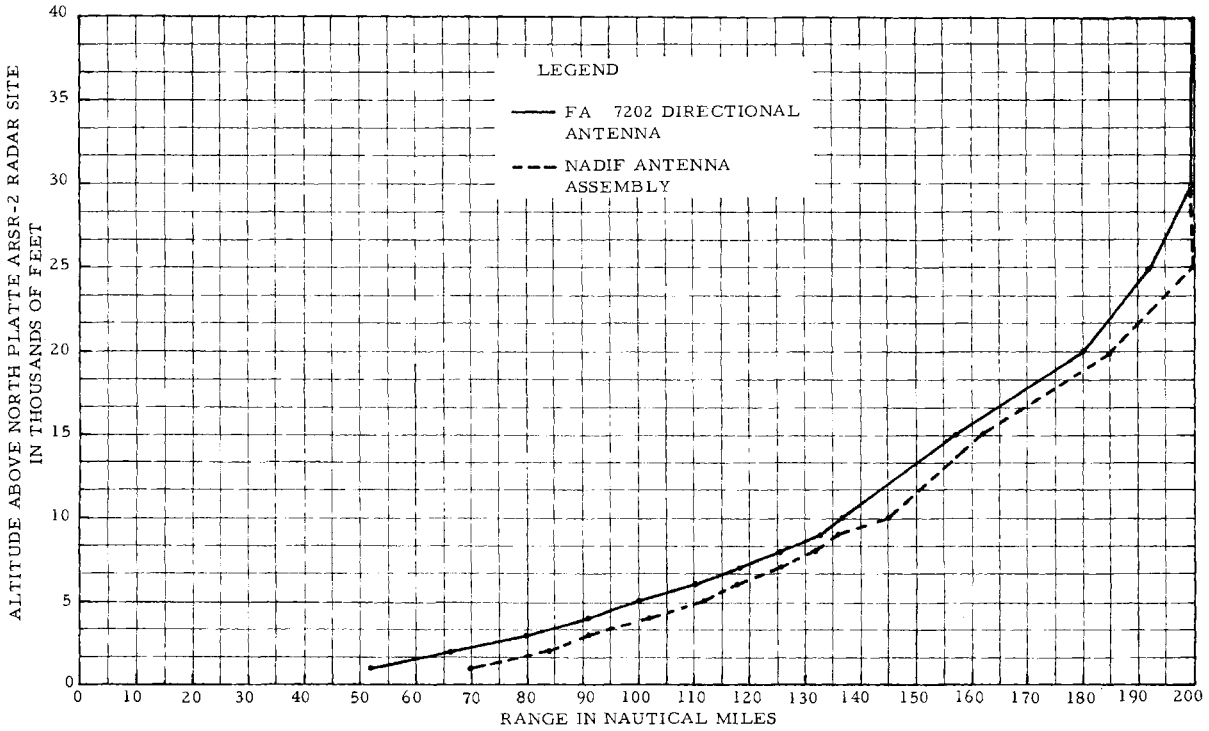

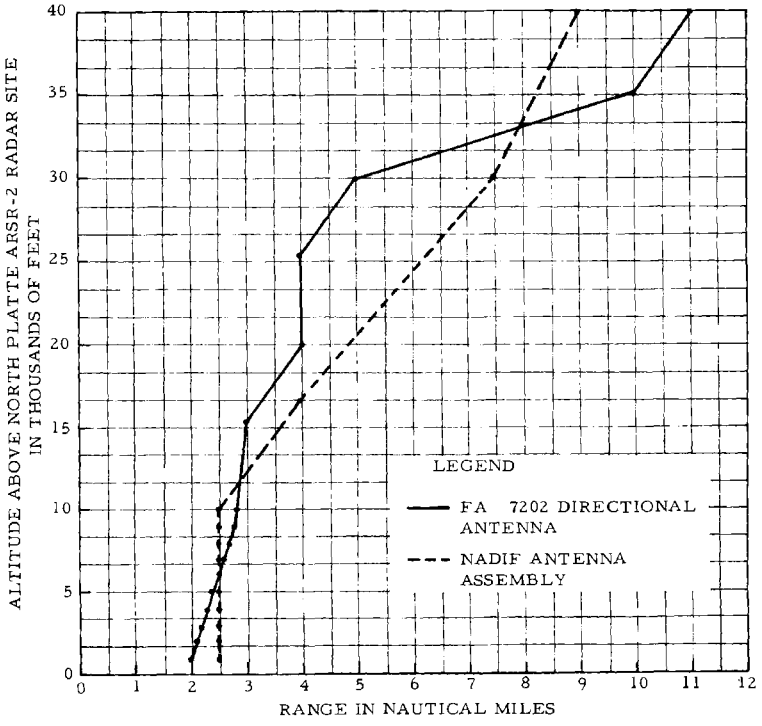

FIGURE 28. COVERAGE LIMITS MEASURED DURING THE HIGH-ALTITUDE FLIGHT TESTS AT NORTH PLATTE

TABLE 2. SUMMARY OF OUTER COVERAGE LIMITS OF THE NORTH PLATTE SYSTEM ON THE 268° RADIAL

(1) Altitude (feet) above elevation of site 3,162 ft	(2) Maximum range (nmi) of low-altitude aircraft using NADIF modification	(3) Maximum range (nmi) of high-altitude aircraft using NADIF modificaiton	(4) Maximum recorded range (nmi) using standard directional antenna during initial commissioning flight tests	(5) Radio horizon range (nmi) for altitude using 4/3 earth refraction propagation and an antenna elevation of 65 ft
1,000	70	70	52	48.8
2,000	85	84	66	64.9
3,000	92	92	80	77.9
4,000	102	102	91	87.7
5,000	112	112	100	96.9
6,000	118	118	110	105.0
7,000	126	126	118	112.8
8,000	132	132	126	119.9
9,000	136	136	133	126.6
10,000	145	145	137	132.9
15,000		162	157	160.5
20,000		185	180	183.8
25,000		200*	192	204.4
30,000		200*	200*	222.9
35,000		200*	200*	240.0
40,000		200*	200*	255.9

*Maximum displayed range of the North Platte radar beacon system.

The low-altitude aircraft maximum range was 85 nmi at an altitude of 2,000 feet, while the high-altitude aircraft maximum range was 84-nmi. The maximum range of coverage at altitudes between 1,000 and 10,000 feet for the low- and high-altitude flight tests was, in all cases, better than the maximum range recorded during the initial commissioning flight tests in which the standard ATCBI antenna, type FA-7202, was used (column 4 of table 2).

The exceptional nature of the radar beacon outer coverage limits with the NADIF antenna assembly modification installed was particularly noticeable when compared with the radio horizon range calculations that appear in column 5 of table 2. The additional coverage was more pronounced at the lower altitudes. It was thought that ducting might be responsible for this additional coverage, but after further investigation, ducting was ruled out since the weather conditions were clear with scattered clouds. Ducting is also less likely to affect propagation during the month of December than during other times of the year, such as the spring and fall. Regardless of what phenomenon caused the exceptional coverage, both Flight Inspection aircraft verified the fact that the radar beacon coverage using the NADIF antenna assembly modification was in all ways better than the standard ATCBI-3 directional antenna.

During the flight tests that were conducted on the North Platte facility, the air traffic controllers at the Denver ARTCC were requested to also monitor the enroute radar returns. These observations were made to determine whether the NADIF dipole antennas, mounted in the vicinity of the radar feed horn, would produce any deterioration of the primary radar operation. No abnormalities were reported during these tests.

SUMMARY OF NORTH PLATTE FLIGHT TEST RESULTS.

The following is a summation of the results of the flight testing that took place within the radar beacon coverage area of the North Platte facility:

1. The NADIF antenna assembly modification eliminated the terrain-reflected radar beacon reply problem at the North Platte facility.

2. The NADIF antenna assembly modification provided equal and in most cases better radar beacon coverage than the standard ATCBI, type FA-7202, antenna (appendix A).

3. The NADIF antenna assembly modification reduced the width of the radar beacon replies on the North Platte system to approximately 3.1°. However, site personnel were able to read out common digitizer (CD)-detected targets during the flight tests without any noticeable losses.

4. When the power input to the omnidirectional antenna was increased to 2,000 watts, the problem of sidelobe returns due to the difference in the vertical radiation patterns of the omnidirectional antenna and the ARSR-2 antenna, fed by the NADIF antenna assembly, was eliminated.

5. Reducing the width of the acceptance gate of the quartz delay-line defruiter from 2.5 to 1.5 μs reduced the amount of nonsynchronous beacon replies that were displayed on the North Platte system.

6. Breaks in the radar beacon replies were traced to near-synchronous replies and the use of the double defruit mode in the North Platte defruiter.

7. Azimuth differences between the radar and radar beacon returns resulted from the use of integrated video on the ARSR-2 radar.

8. The dial settings of the coaxial phase shifters of the NADIF antenna assembly power divider network that were devised for the North Platte, Nebraska, En Route Radar Site should be applicable to other ARSR-2 en route radar sites that utilize a 1.5° antenna tilt.

ADDITIONAL NADIF ANTENNA TESTS

COMMON DIGITIZER TESTS.

Common digitizer tests were conducted by IBM SINE at the Denver, Colorado Air Route Traffic Control Center after the NADIF antenna modification was installed at the North Platte facility. Split radar-beacon replies and false radar-beacon replies were recorded on aircraft using discrete codes traveling through major portions of the coverage areas of all of the six en route radars that fed the Denver Center. The data were manually extracted from the common digitizer printouts. The acceptable tolerance limits were two percent for both the split radar-beacon replies and false radar-beacon replies. The results of the test were as follows:

Split Radar-Beacon Replies (Percent)	Radar Site	False Radar-Beacon Replies (Percent)
4.8	Denver	8.6
2.0	North Platte	2.0
3.8	Grand Junction	9.13
3.5	Lusk	4.4
3.2	Trinidad	12.2
3.2	Gallup	4.0

From the results of these tests, it can be seen that the North Platte facility is the only radar beacon site feeding the Denver Center that met the two-percent acceptable tolerance limits for split radar-beacon replies and false radar-beacon replies after the NADIF antenna modification was installed.

RADAR FEED-THROUGH TESTS.

Due to the exceptionally high power output of the ARSR-2 radar transmitter (4.2 megawatts, using the amplitron) it was questionable whether the radar transmissions might not be coupled into the radar beacon system through the NADIF antenna dipole antennas. The polarization of the ARSR-2 signals are horizontal when the radar is in linear polarization. Therefore, the coupling was insignificant, as expected, between the horizontal, linear radar radiations and the vertically polarized dipole antennas of the NADIF antenna modification, even though the NADIF antenna dipole antennas were in close proximity to the radar feed horn.

Whenever the ARSR-2 radar polarization is changed to circular, the polarization of the signals are altered so that they have a vertical as well as a horizontal component. At North Platte, it was noted that the power output meter of the radar beacon interrogator showed a forward and a reverse power of approximately 150 watts whenever the radar was changed from linear to circular polarization, and the amplitron was being used. This power reading was obtained at the output of the radar beacon interrogator even when the radar beacon interrogator was not interrogating.

In order to eliminate the feed-through of the radar signals into the radar beacon system when the radar was placed in circular polarization, a low-pass filter was added to the input of the power divider network of the NADIF antenna assembly. This low-pass filter was manufactured by RLC Electronics and provided at least 30 dB of attenuation from 1280 to 5000 MHz. The insertion loss of this low-pass filter, designated as Model No. F-2871, was approximately .3 dB at 1090 MHz and slightly less at 1030 MHz. The filter was capable of handling 2 kW of peak power and reduced the feed-through of the radar into the radar beacon system to such an insignificant value that it could no longer be read on the output meter of the radar beacon interrogator.

CONCLUSIONS

Based on the results of the experimental testing performed on the NADIF antenna, it is concluded that:

1. The NADIF antenna modification should be accepted as a temporary fix at the North Platte facility to eliminate the split radar-beacon reply problem until a production radar-beacon directional antenna with a controlled vertical radiation pattern can be developed.

2. Since the coverage provided by the NADIF antenna modification at North Platte was adequate, the NADIF antenna modification can be used at other ARSR-2 radar facilities that have a 1 1/2° radar antenna tilt to eliminate propagation problems that can be traced to terrain-reflected signals below the horizon of the antenna.

3. The NADIF antenna modification is applicable to ARSR-2 and other types of en route radars with antenna tilts other than 1 1/2°.

4. Sidelobe returns caused by the mismatch of vertical antenna patterns of the NADIF antenna modification and the normal omnidirectional antenna can be reduced or eliminated by using increased power input to the omnidirectional antenna or increasing the bias of the STC curve.

5. A more up-to-date radar beacon defruiter is needed at the North Platte facility.

6. Unless a low-pass filter is used in the NADIF antenna assembly, the radar signals will cause erroneous readings on the output meter of the radar beacon interrogator when the radar is radiating a circularly polarized signal.

7. The NADIF antenna modificaion did not degrade the primary radar performance during flight tests performed at the North Platte facility.

RECOMMENDATIONS

Based on the results of the experimental testing performed on the NADIF antenna, it is recommended that:

1. The NADIF antenna modification be implemented at other ARSR-2 en route radar facilities that have an antenna tilt of 1 1/2° and have propogation problems similar to that experienced at the North Platte facility.

2. Further experimentation be performed at NAFEC to provide NADIF antenna power-settings that could be used at ARSR-2 and other types of en route radar facilities where the antenna tilt is something other than 1 1/2°.

3. An omnidirectional antenna be developed with the same vertical radiation pattern as the NADIF antenna. This antenna would allow reduction of the omnidirectional antenna power and the STC curve bias.

4. A digital defruiter should be installed at the North Platte facility to provide improved defruiting.

5. An investigation be conducted to determine the source of the near-synchronous interference experienced during the testing at North Platte. The interference may be caused by an MPN-14 RAPCON interrogator that is not counting down correctly.

6. Low-loss coaxial cable be installed at North Platte between the rotary joint and the power divider network unit at some future time.

7. Fixed lengths of coaxial cables be substituted for the phase shifters presently installed in the power divider network.

8. A low-pass filter be installed at the input to the power divider network to eliminate feedback of primary radar power into the radar beacon interrogator when the radar is placed in circular polarization.

APPENDIX A

Central Region Letter Expressing Satisfaction Concerning the NADIF Antenna Installation at North Platte

DEPARTMENT OF TRANSPORTATION
FEDERAL AVIATION ADMINISTRATION

CENTRAL REGION
601 EAST 12TH STREET
KANSAS CITY, MISSOURI 64106

DATE: 5 FEB 1973

IN REPLY REFER TO: ACE-433

SUBJECT: Appreciation of services

TO: ANA-1

We wish to express our sincere appreciation for the excellent engineering support furnished by NAFEC personnel in resolving a long-standing radar beacon problem at the North Platte, Nebraska, ARSR facility.

False beacon targets on the North Platte system seriously derogated the Air Traffic Control function at Denver ARTCC. Conventional methods to eliminate the false targets were not successful and we requested NAFEC assistance through the Airway Facilities Service.

The response was prompt. A NAFEC team under the guidance of Mr. George F. Spingler, ANA-120, collected data on the false targets in June 1972.

Analysis of the data verified that reflections from the unusual terrain surrounding the radar site were causing the false targets. The team then proceeded to design and develop a beacon antenna feed system which effectively reduced low angle radiation. The new antenna system was successfully flight checked and placed in operational service on 21 December 1972. False targets have been eliminated and coverage surpasses that of the standard beacon antenna.

We were most impressed with the courtesy and professionalism exhibited by the NAFEC people. Their systematic approach throughout the project and their enthusiasm in accomplishing the many difficult tasks are particularly noteworthy. They were well informed about our operational requirements and were most cooperative in assuring minimal interference to the traffic control function.

Please accept our thanks for your assistance and convey our gratitude to Mr. Spingler and his colleagues.

JOHN M. CYROCKI
Director, ACE-1