Report No. FAA-RD-74-70

# STOL NOISE PREDICTION AND ATTENUATION MODELS IN SUPPORT OF REGULATORY EFFORT

NAFEC
LIBRARY
APR 30 '74
RECEIVED

Joseph K. Power

APRIL 1974

FINAL REPORT

Document is available to the public through the
National Technical Information Service,
Springfield, Virginia 22151

Prepared for

**DEPARTMENT OF TRANSPORTATION**
**FEDERAL AVIATION ADMINISTRATION**
**Systems Research & Development Service**
**Washington, D.C. 20590**

## NOTICE

This document is disseminated under the sponsorship of the Department of Transportation in the interest of information exchange. The United States Government assumes no liability for its contents or use thereof.

TECHNICAL REPORT STANDARD TITLE PAGE

| 1. Report No. | 2. Government Accession No. | 3. Recipient's Catalog No. |
|---|---|---|
| FAA-RD-74-70 | | |

| 4. Title and Subtitle | 5. Report Date |
|---|---|
| STOL Noise Prediction and Attenuation Models In Support Of Regulatory Effort | April 1974 |
| | 6. Performing Organization Code |
| 7. Author(s) | 8. Performing Organization Report No. |
| Joseph K. Power | |
| 9. Performing Organization Name and Address | 10. Work Unit No. |
| Department of Transportation<br>Federal Aviation Administration/SRDS<br>2100 - 2nd Street, S.W.<br>Washington, D.C. 20591 | 11. Contract or Grant No. |
| | 13. Type of Report and Period Covered |
| 12. Sponsoring Agency Name and Address<br>Department of Transportation<br>Federal Aviation Administration<br>Systems Research and Development Service<br>2100 - 2nd St., S.W./ Washington, D.C. 20591 | 14. Sponsoring Agency Code |

15. Supplementary Notes

Presented at Joint International Short Course; "STOL Aircraft Technology and The Community", April 22-26, 1974 sponsored by the University of Tennessee Space Institute and the Technical University of Aachen, Germany

16. Abstract

For Commercial STOL Aircraft the most critical design parameter is the noise level. This paper discusses the impact of existing and expected noise regulations on the development of STOL aircraft. Models for STOL noise prediction are presented, as well as noise reduction mechanisms and a ranking of V/STOL Aircraft Noise Sources.

This paper was presented as part of short course in STOL Technology "STOL Aircraft Technology and The Community", jointly sponsored by the University of Tennessee Space Institute and the Technical University of Aachen, Germany. Participants included Nationals of Germany, Canada, United Kingdom as well as industry participants throughout the U.S.

| 17. Key Words | 18. Distribution Statement |
|---|---|
| Aircraft Noise Abatement<br>V/STOL<br>STOL | Document is available to the public through the National Technical Information Service, Springfield, Virginia 22151. |

| 19. Security Classif. (of this report) | 20. Security Classif. (of this page) | 21. No. of Pages | 22. Price |
|---|---|---|---|
| UNCLASSIFIED | UNCLASSIFIED | 86 | |

Form DOT F 1700.7 (8-69)

TABLE OF CONTENTS

PAGE

Summary..... 1
Introduction..... 1
The FAA V/STOL Noise Prediction and Reduction Program..... 12
Identification of V/STOL Noise Sources (Jet Propulsors)..... 14
Ranking of V/STOL Aircraft Noise Sources (Jet Propulsors)..... 16
Basic Engine Noise..... 22
Augmented Lift System Noise..... 22
Non-Engine Aerodynamic Noise..... 24
Auxiliary Equipment Noise..... 24
Conclusions..... 26
Identification of Rotary Propulsor Noise Sources..... 31
Development of Prediction Techniques From Noise Generation Mechanisms..... 33
Prediction Curves for Jet Propulsor/Augmented Lift Systems
General.....34-37
VT Aircraft.....38-40
EBF/LSB.....41-45
AIBF.....46-48
IBF/BLC.....49-51
AW Aircraft.....52-57
EBF/USB.....58-63
STOL Noise Reduction Mechanisms..... 63
Nozzle Configurations..... 65
Flap Structural Configurations..... 77
References..... 82

# STOL NOISE PREDICTION AND ATTENUATION MODELS IN SUPPORT OF REGULATORY EFFORT

Joseph K. Power

## SUMMARY

Commercial STOL (short takeoff and landing) aircraft may be redesignated as "Short Haul", "Q/STOL", "V/STOL" or "QSAT" but the most critical design parameter will be the noise level. This paper discusses the impact of existing and expected noise regulations on the development of the STOL aircraft. Models for STOL noise prediction are presented, as well as noise reduction mechanisms, and a ranking of V/STOL aircraft noise sources.

## INTRODUCTION

The critical design parameter for STOL aircraft is noise. The STOL noise design goal must be set at a level such that community impact is minimized with energy consumption per passenger mile better than or equal to other transportation modes when properly weighted for time resource savings and cost for point-to-point travel. The current design goal of 95 EPNdB measured at a 500 foot sideline (which was first put forth in the mid-1960's) has been criticized for maintaining a position judged unreasonably stringent by aircraft designers and inadequately stringent by community groups that fear further damage to the quality of their environment. Although current technology may not now be able to satisfy all the existing constraints, let alone permit optimization with respect to a multitude of different objective functions, the real test of a viable STOL will be to achieve an acceptable noise level. This requirement will demand <u>lower</u> levels as time moves on.

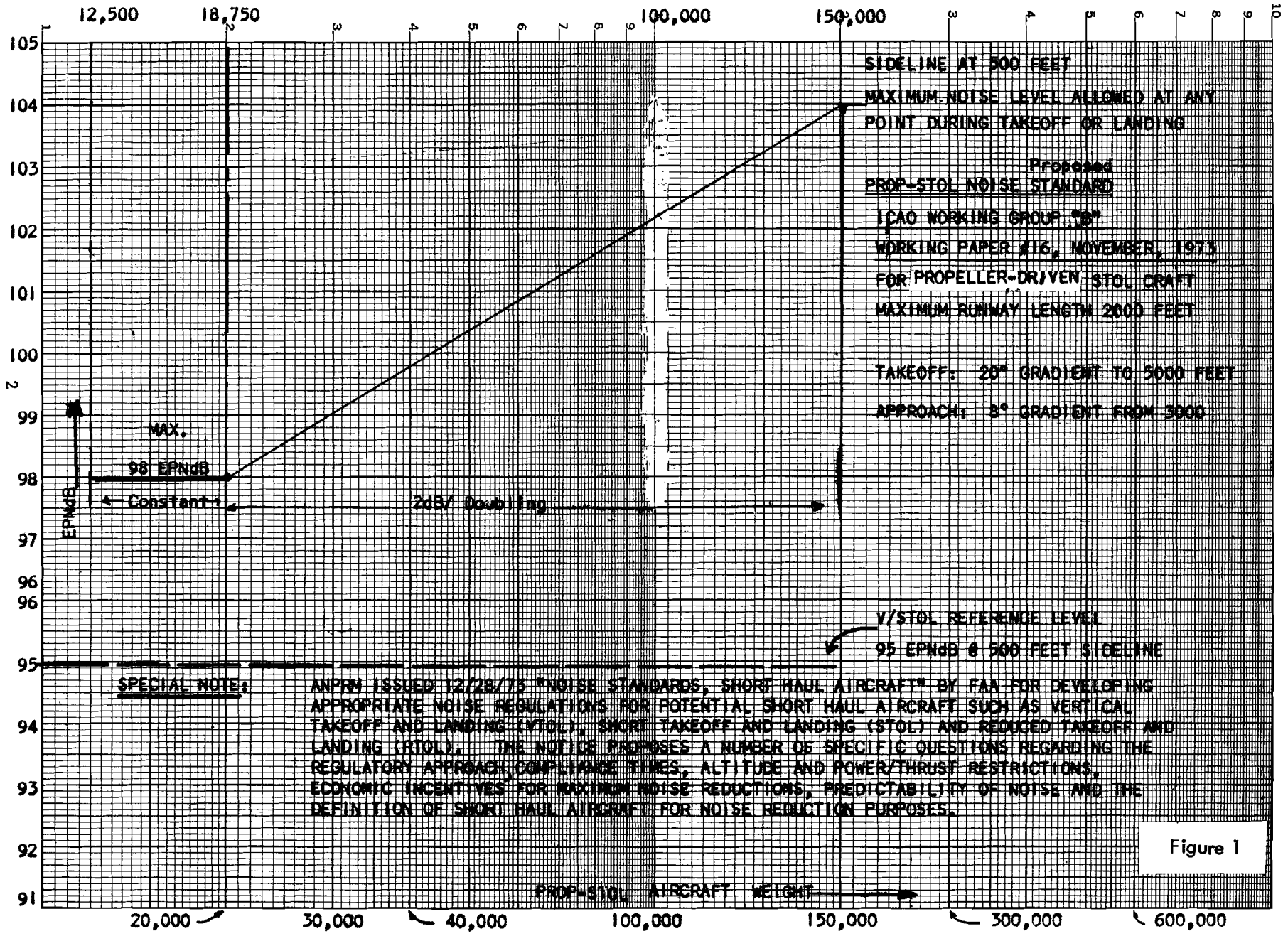
12,500
18,750
100,000
150,000
SIDELINE AT 500 FEET
MAXIMUM NOISE LEVEL ALLOWED AT ANY POINT DURING TAKEOFF OR LANDING
Proposed
PROP-STOL NOISE STANDARD
ICAO WORKING GROUP "B"
WORKING PAPER #16, NOVEMBER, 1973
FOR PROPELLER-DRIVEN STOL CRAFT
MAXIMUM RUNWAY LENGTH 2000 FEET
TAKEOFF: 20° GRADIENT TO 5000 FEET
APPROACH: 3° GRADIENT FROM 3000
MAX.
98 EPNdB
Constant
2dB/ Doubling
EPNdB
V/STOL REFERENCE LEVEL
95 EPNdB @ 500 FEET SIDELINE
SPECIAL NOTE:
ANPRM ISSUED 12/29/75 "NOISE STANDARDS, SHORT HAUL AIRCRAFT" BY FAA FOR DEVELOPING APPROPRIATE NOISE REGULATIONS FOR POTENTIAL SHORT HAUL AIRCRAFT SUCH AS VERTICAL TAKEOFF AND LANDING (VTOL), SHORT TAKEOFF AND LANDING (STOL) AND REDUCED TAKEOFF AND LANDING (RTOL). THE NOTICE PROPOSES A NUMBER OF SPECIFIC QUESTIONS REGARDING THE REGULATORY APPROACH, COMPLIANCE TIMES, ALTITUDE AND POWER/THRUST RESTRICTIONS, ECONOMIC INCENTIVES FOR MAXIMUM NOISE REDUCTIONS, PREDICTABILITY OF NOISE AND THE DEFINITION OF SHORT HAUL AIRCRAFT FOR NOISE REDUCTION PURPOSES.
PROP-STOL AIRCRAFT WEIGHT
20,000
30,000
40,000
100,000
150,000
300,000
600,000
105
104
103
102
101
100
99
98
97
96
95
94
93
92
91

Figure 1

Figure 1 shows excerpts from the ICAO working group B, working paper No. 16 (November 1973) which proposes a maximum of 98 EPNdB for propeller driven STOL craft from 12,500 to 18,750 pounds. Above 18,750 to 150,000 pounds, the noise level maximum increases at a rate of 2db per doubling to a maximum of 104 EPNdB. This noise level uses the EPNdB as defined in Federal Aviation Regulation (FAR) 36. The limit applies to a 500-foot sideline measurement at any point during both take-off and landing. The maximum runway length is 2000 feet. The takeoff gradient is defined as $20^{o}$ to 5000 feet. Approach gradient is $8^{o}$ from 3000 feet. This is an important indication of the direction in which the international regulatory body is moving. In fact, the indications are contradictory. Although the ICAO proposal uses EPNdB as an appropriate measure of aircraft noise which considers all currently understood annoyance factors, the proposal can only be seen as an early retreat from the 95 EPNdB "STOL Goal" proposed limit for 500 feet sideline.

The FAA has taken an essential step in issuing an Advance Notice of Proposed Rulemaking (ANPRM) (12/28/73) "Noise Standards Short Haul Aircraft" for developing appropriate noise regulations for potential short haul aircraft such as Vertical Takeoff and Landing (VTOL), Short Takeoff and Landing (STOL) and Reduced Takeoff and Landing (RTOL). The notice proposes a number of specific questions regarding the regulatory approach, compliance times, altitude and power/thrust restrictions, economic incentives for maximum noise reductions, predictability of noise and the definition of short haul aircraft for noise reduction purposes.

# CERTIFICATED NOISE LEVELS (EPNdB)

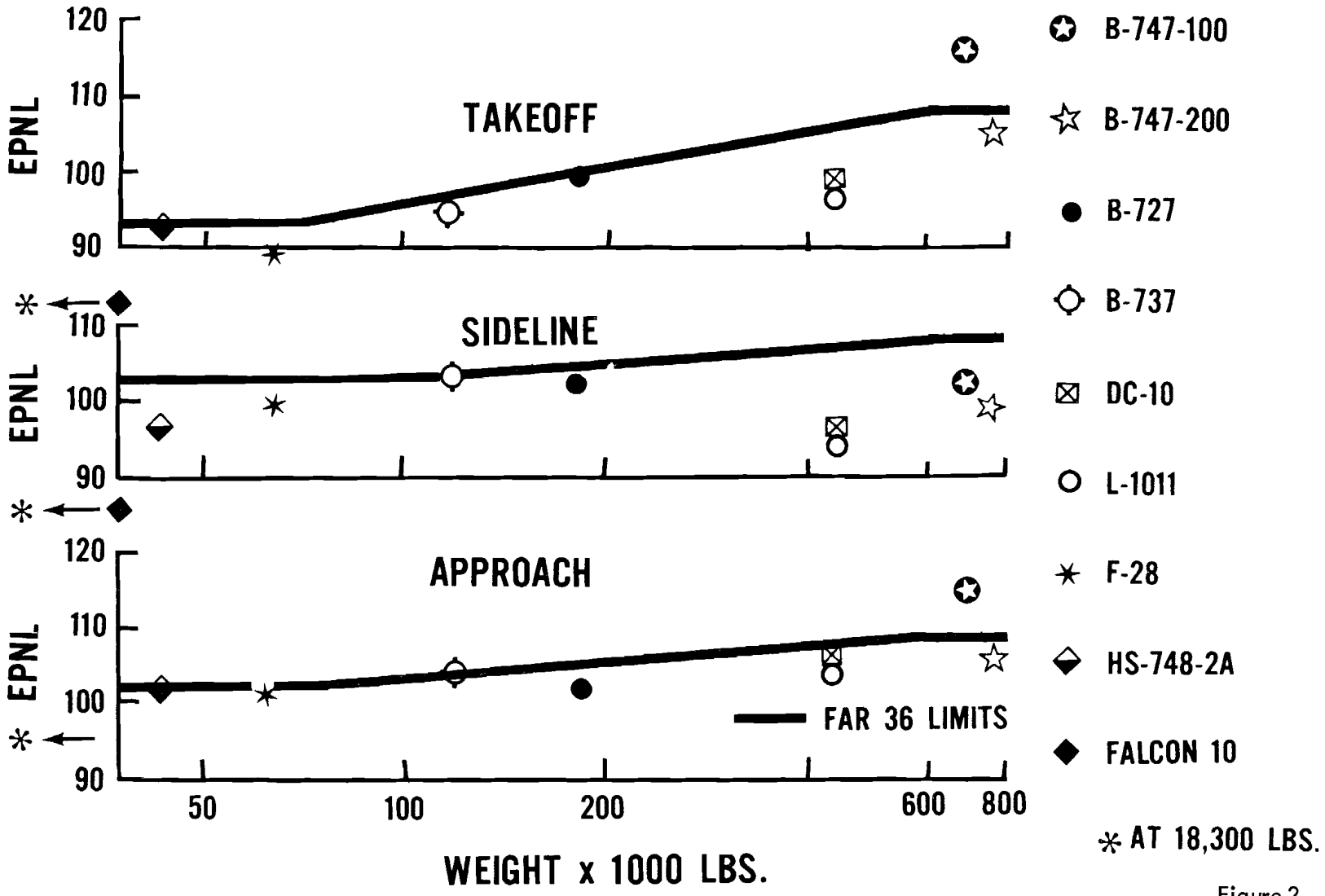


Figure 2

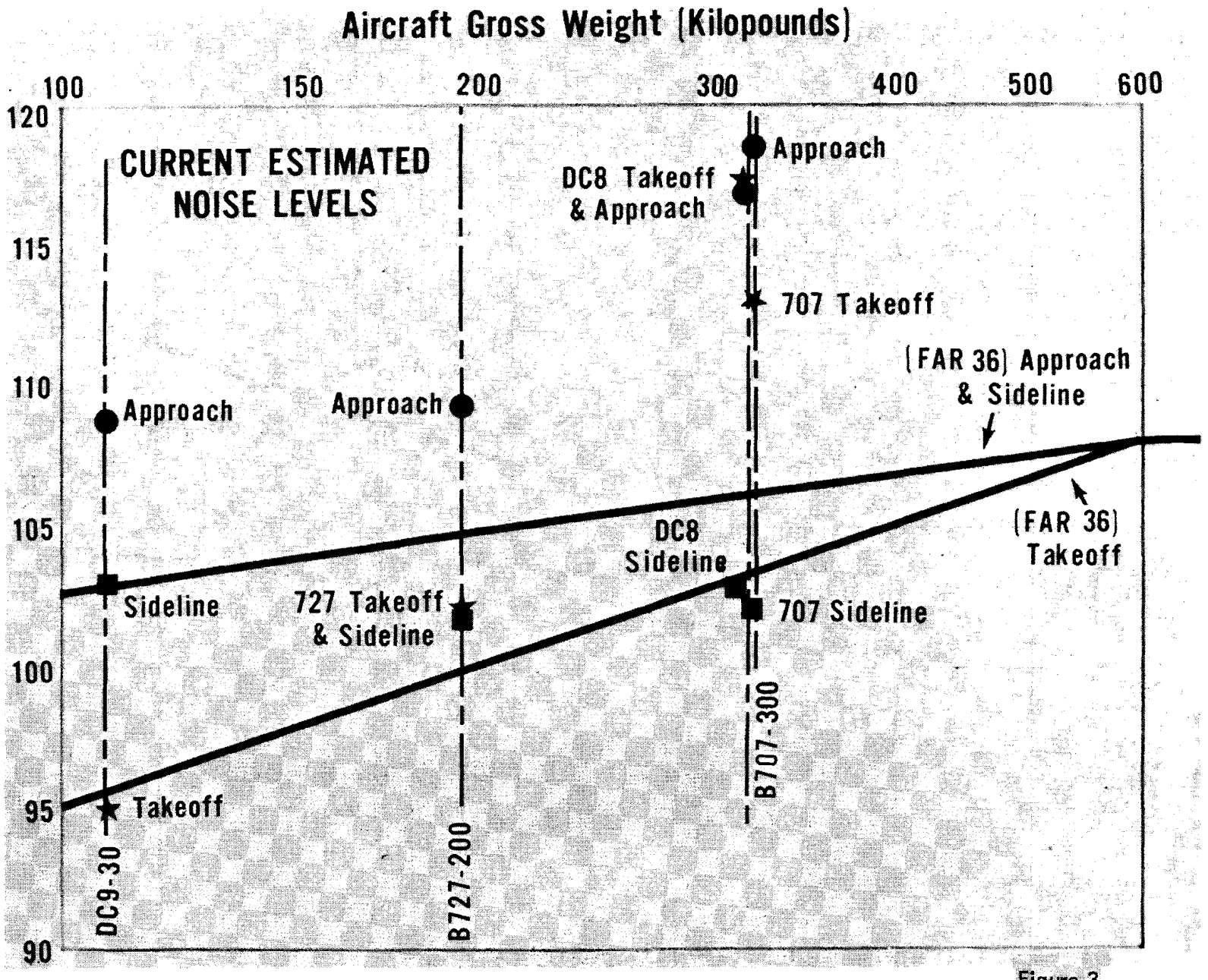
Aircraft Gross Weight (Kilopounds)
100
150
200
300
400
500
600
120
115
110
105
100
95
90
CURRENT ESTIMATED NOISE LEVELS
Approach
Sideline
Takeoff
DC9-30
Approach
727 Takeoff & Sideline
B727-200
DC8 Takeoff & Approach
Approach
707 Takeoff
DC8 Sideline
707 Sideline
B707-300
(FAR 36) Approach & Sideline
(FAR 36) Takeoff

Figure 3

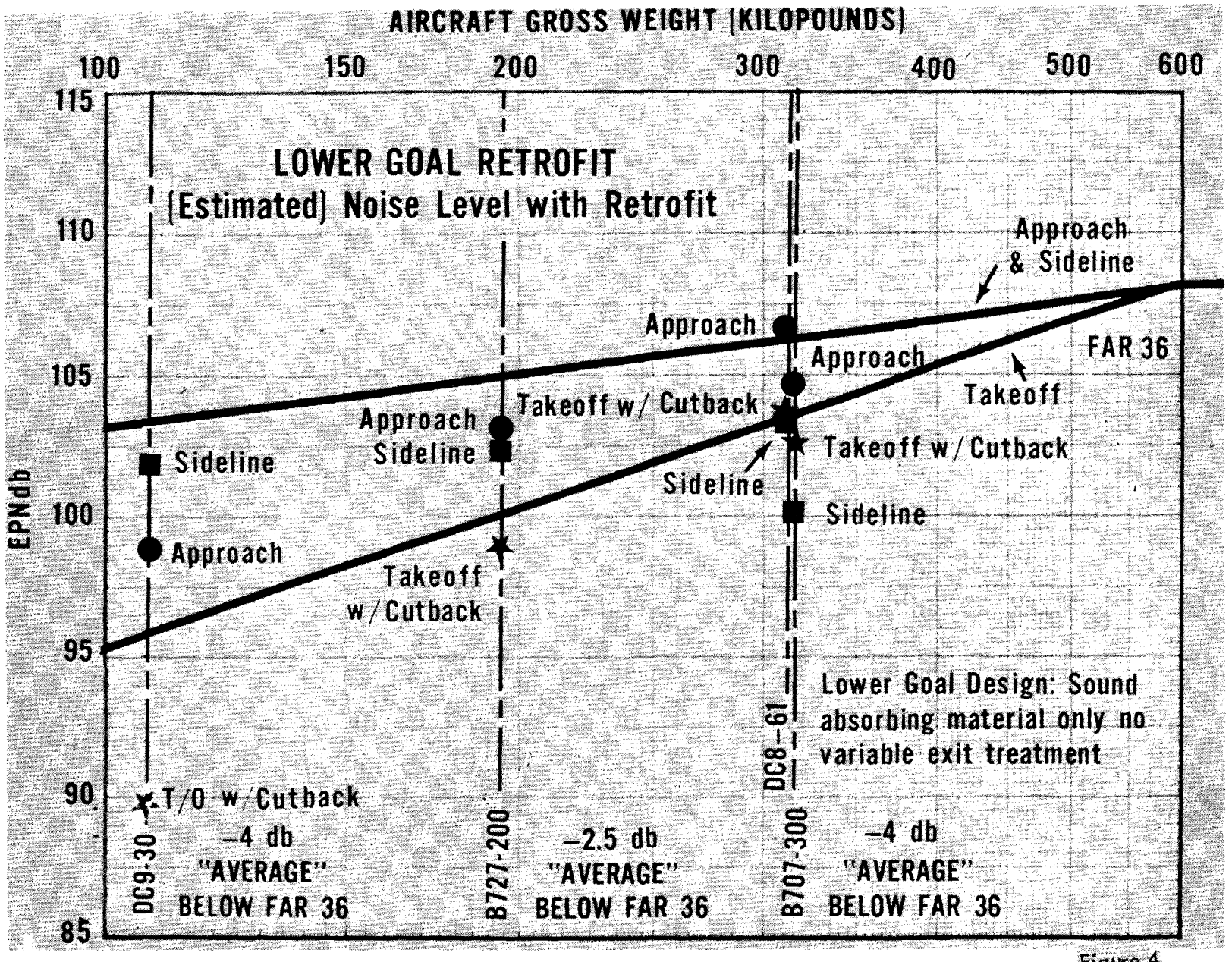
AIRCRAFT GROSS WEIGHT (KILOPOUNDS)
100
150
200
300
400
500
600
115
110
105
100
95
90
85
EPNdb
LOWER GOAL RETROFIT
(Estimated) Noise Level with Retrofit
Approach & Sideline
Approach
Approach
FAR 36
Takeoff
Takeoff w/ Cutback
Approach
Sideline
Sideline
Takeoff w/Cutback
Sideline
Sideline
Approach
Takeoff w/Cutback
Lower Goal Design: Sound absorbing material only no variable exit treatment
T/O w/Cutback
DC9-30
–4 db "AVERAGE" BELOW FAR 36
B727-200
–2.5 db "AVERAGE" BELOW FAR 36
DC8-61
B707-300
–4 db "AVERAGE" BELOW FAR 36

Figure 4

It is significant to note that when FAR 36 was issued as a rule in November 1969 as "Noise Standards: Aircraft Type Certification" it was intended to apply to high by-pass ratio turbofan engines in the wide-body jets. At that time, it was not a certainty that the narrow-body jets could be successfully retrofitted to provide noise levels below FAR 36. The FAA's Retrofit Feasibility Program has investigated and demonstrated feasibility which is linked to the language of PL 90-411. The solutions yielded by the FAA-sponsored investigation are "technologically practicable and economically reasonable."

Figure 2 shows noise levels for a group of CTOL aircraft certificated to meet FAR, part 36. Figure 3 shows the noise levels produced by some of the older, narrow-body jets (B727, DC-9, B707, DC-8). The FAA's Retrofit Feasibility Program has yielded reduced noise levels for retrofit with SAM (Sound Absorbing Material) which reduces fan noise without exit area modification. See Reference 1. Figure 4 shows levels achieved by "SAM-only", lower goal retrofit design for B727, DC-9, B707. The DC-9 uses a "DACO-2" design with minor exit area modifications. The DC-8/JT3D retrofit feasibility study is not complete, but a JT3D/B707/DC-8 generality study makes the success of DC-8 retrofit feasibility predictable.

Reference 2 even more dramatically shows the strides made by the aircraft industry in response to environmental needs. In the discussion of possible FAR 36 modifications, it is mentioned that the advances in

acoustic technology have suggested that substantial reductions in the noise level standards may be possible. Figure 5 shows an alternative for FAR 36 modification which is offered for consideration by the author. The connection between CTOL acoustic technology and STOL technology lies in the ability of the aircraft industry to respond to and meet a challenge. Concurrent noise reductions in airframe noise, core engine noise and powered lift noise are required.

Figure 5 ***NOISE LEVEL STANDARDS***

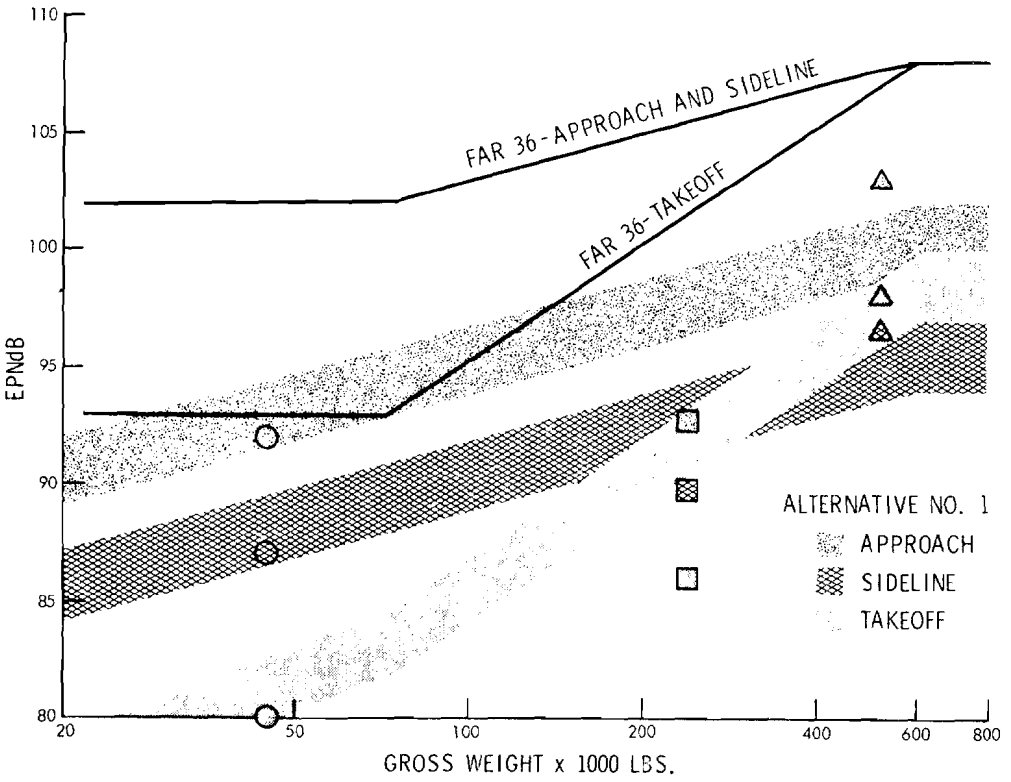


The magnitude of the problem faced by STOL noise technology can be seen by a comparison with FAR 36 requirements.

(Reference 3) shows a comparison of FAR 36 and STOL GOAL sideline requirements at 500 feet, for a 90,000 pound thrust level. The STOL GOAL represents a 30 EPNdB required improvement over FAR 36 levels extrapolated to a 500 foot sideline.

Figure 6

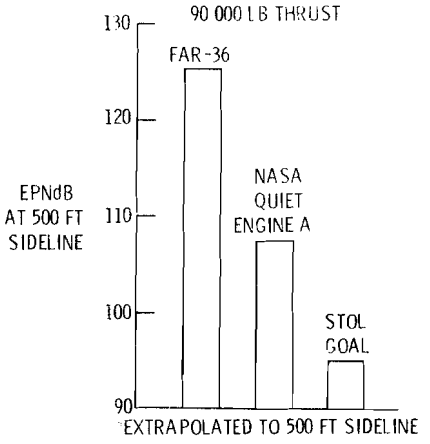


Figure 6 shows the Sideline Noise Comparisons, and includes the results of a CTOL program, called "Quiet Engine A" (See Reference 4). Other comparisons between FAR 36 extrapolations to 500 feet sideline and the 95 EPNdB STOL GOAL have indicated that a 22 to 25 EPNdB difference exists, rather than the 30 EPNdB difference quoted by Rulis. The reason for differing values could be the difference in the noise source characteristics which would affect the EPNdB. Figure 7 and Figure 8 illustrate the computation of EPNL including effect of frequency spectrum, tone and duration correction. All authorities agree that the goal is a formidable one, and represents a challenge to technology although reasonable in terms of what needs to be accomplished.

Public Law 92-574 defines the relative roles of EPA and FAA in the area of

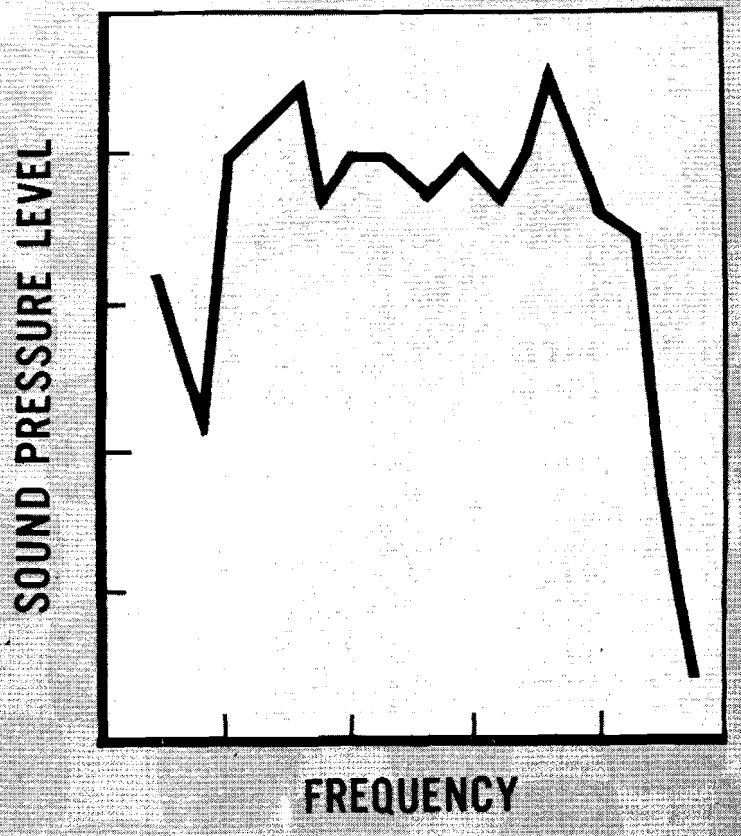


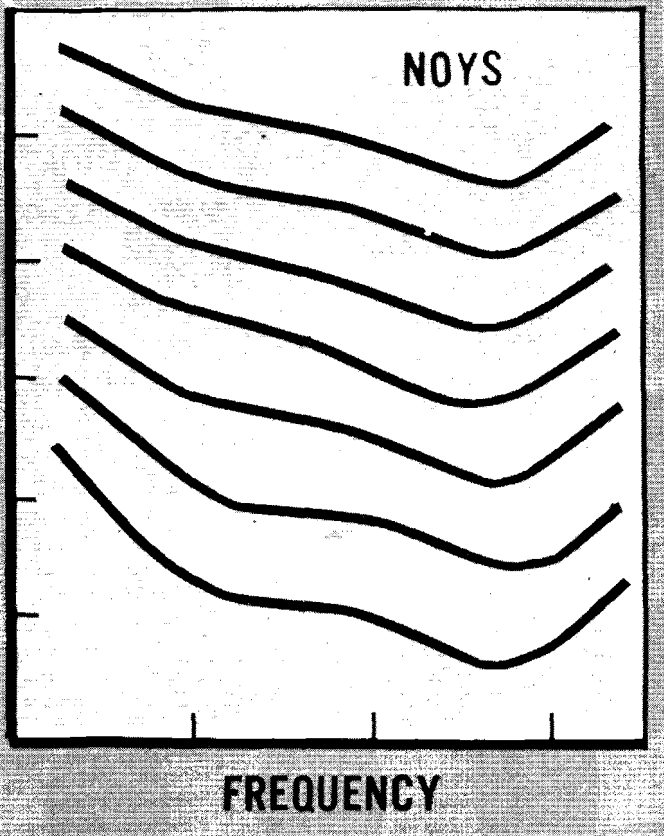


$$N = \underline{n} + 0.15 \left[ \sum_{i=1}^{24} n(i) - n \right]$$

$$PNL = 40 + 33.3 \text{ Log } N$$

Tone Correction: $PNLT = PNL + C$

Figure 7

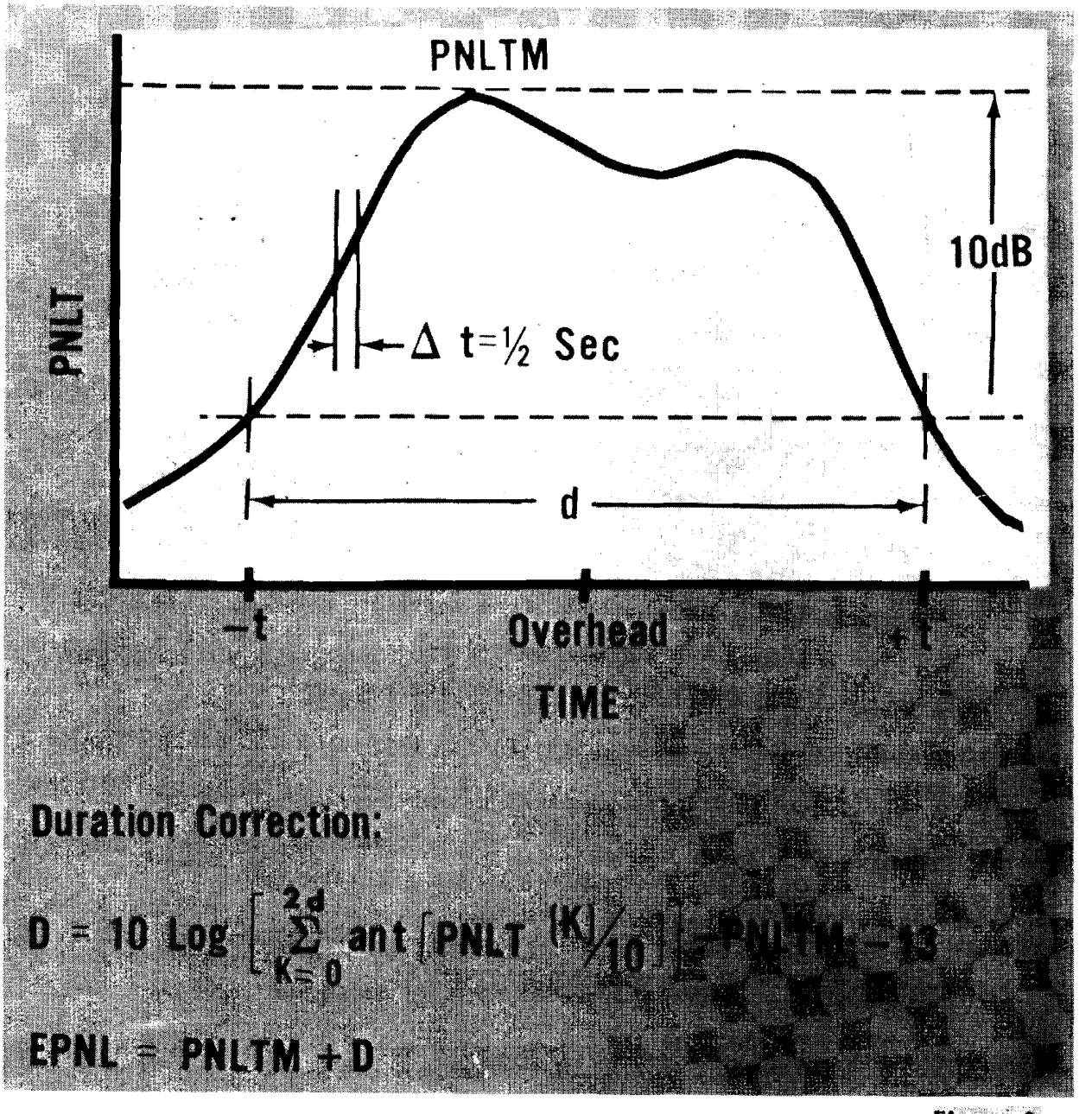
PNLTM
10dB
PNLT
Δ t=½ Sec
d
−t
Overhead
+t
TIME
Duration Correction:
D = 10 Log [ Σ ant [PNLT (K)/10] ] − PNLTM − 13
EPNL = PNLTM + D

Figure 8

aircraft noise control. Otherwise PL 92-574, Section 7a is similar to PL 90-411 in that both seek to provide the maximum environmental protection possible with respect to aircraft noise and sonic boom. The new act departed from all previous legislation with regard to one particular issue. The new act prohibited the Administrator of the FAA from issuing any original type certificate to any aircraft until a finding had been made as to whether or not substantial noise abatement could be achieved for that aircraft by prescribing standards and regulations. The FAA must continue, therefore, to make individual noise findings for original certificates until minimal noise level standards and regulations are prescribed for all classes of aircraft. In support of the FAA's regulatory activity, a data base had to be developed. The priorities for CTOL aircraft demanded the lion's share of industry and government resources, nevertheless, the solution of related acoustic problems was deemed essential to the realization of a successful short haul air transportation system.

## The FAA V/STOL Noise Prediction and Reduction Program

In support of regulatory effort, the FAA is committed to obtaining a data base in an effort to establish minimal noise level standards for this class of aircraft.

The FAA has awarded a contract to Lockheed-Georgia Company (DOT FA72WA-3099) which has yielded a report (Reference 5). An additional contract award is in process for "V/STOL Rotary Propulsors Noise Prediction and Reduction". In addition, an expansion and updating of the jet propulsion noise sources is

planned both to reflect the acoustical technology for STOL and to utilize the latest STOL noise prediction programs for use by airport/STOLPORT planners for land use.

Due to the multiplicity of STOL configurations and the many different descriptions of these configurations, it is necessary to identify noise sources and noise generating mechanisms. Where a standard terminology exists, there is no problem, however, since the terminology is nascent it is necessary to be arbitrary and use the Lockheed-Georgia terminology which appears in the "V/STOL NOISE PREDICTION AND REDUCTION" report.

The Lockheed Georgia investigation (Ref. 5) of V/STOL noise has concentrated on the unique noise sources applicable to different jet flow V/STOL propulsion and augmented highlift systems. Due to the nature of the noise sources, which predominantly involve flow over and/or from structural surfaces, dipole-type noise fields were studied by the contractor in the greatest depth.

Most of the available theoretical works address, individually, the fundamentals of the various noise generating mechanisms, often in terms of such flow parameters as turbulence intensity and scale factor. Theory is presently incapable, however, of describing such noise-critical flow parameters for the complex and interacting flow fields which are characteristic of promising V/STOL aircraft systems. Thus, although good understanding of total system noise requires first a definition of the indidivual noise source characteristics, theory alone is presently incapable of the integration required for total system noise prediction. Available experimental data, on the other hand, generally define only the gross effects of

various geometrical and average flow variations on total system noise; the data do not typically include measurements of the more fundamental noise-critical flow parameters. Hence, the experimental data base is deficient in providing insight to the characteristics of individual noise sources and, therefore, does not permit valid extrapolation and prediction of noise for untested configurations and/or conditions. Within the constraints of the current state-of-the-art, it thus becomes obvious that noise prediction procedures must include both empirical and theoretical elements.

Even though no new experimental or theoretical studies were a part of reference 5, it is believed that the noise prediction procedures developed represent an advancement in the state of the art. The reason for the advancement is the pulling together of many widely distributed pieces of test data and the theoretical work on many types of V/STOL aircraft into one study, and (1) evaluating each piece of data in the light of the other knowledge available, and (2) transforming the findings into a set of co-ordinated noise prediction procedures for various V/STOL aircraft types. Through iteration, employing new experimental data as it becomes available, the prediction accuracy of these procedures may be continually improved.

IDENTIFICATION OF NOISE SOURCES (V/STOL)

The four major categories are listed below are associated with Jet Propulsors -

Basic Engine Noise

- Forward Fan Noise
- Compressor Noise

Basic Engine Noise (cont'd)

- Case Radiated Noise
- Aft Fan Noise
- Combustion Noise
- Turbine Noise
- Core Jet Noise
- Nozzle Trailing Edge Separation Noise
- Fan Jet Noise
- Thrust Reverser Noise

Non-Engine Noise

- Wing and Flap System Noise
- Extended Landing Gear Noise
- Wheel Well Cavity Noise
- Fuselage and Other Surfaces
- Antenna, Vents, Protrusions, etc.

Augmented Lift System Noise

- Directional Nozzle Noise
- Wing Jet Noise
- Ejector Wake Noise
- Flap Wake Noise
- Wing Scrubbing Noise
- Flap Scrubbing Noise
- Flap Trailing Edge Separation Noise

Auxiliary Equipment Noise

- Auxiliary Power Unit Noise
- Environmental Control System Noise

Basic engine noise, auxiliary equipment noise, and non-engine aerodynamic self noise are common to CTOL and V/STOL aircraft, while augmented lift system noise is unique to the various types of V/STOL aircraft. A ranking of the V/STOL aircraft noise sources follows:

RANKING OF V/STOL AIRCRAFT NOISE SOURCES (Jet Propulsors)

The ranking of noise sources associated with V/STOL aircraft is sensitive to changes in the aircraft geometry and propulsion performance characteristics. However, by attempting to rank the noise sources for specific baseline aircraft configurations some observations pertaining to magnitude of the noise sources are of value.

A ranking of the noise sources associated with 100-passenger V/STOL aircraft designed for operation from a 2,000 ft. runway is accomplished by using analytical equations which have evolved as a result of this program. Baseline aircraft configurations which are believed to be reasonably representative of VT, EBF/LSB, AIBF, IBF/BLC, EBF/USB, AW-2S and AW-3S aircraft were chosen. Figures 9 thru 15 show sketches of these aircraft respectively and Table 1 gives the associated aircraft characteristics.

Noise associated with each of the baseline aircraft is considered to be composed of four major components.

- Basic engine noise
- Augmented lift system noise

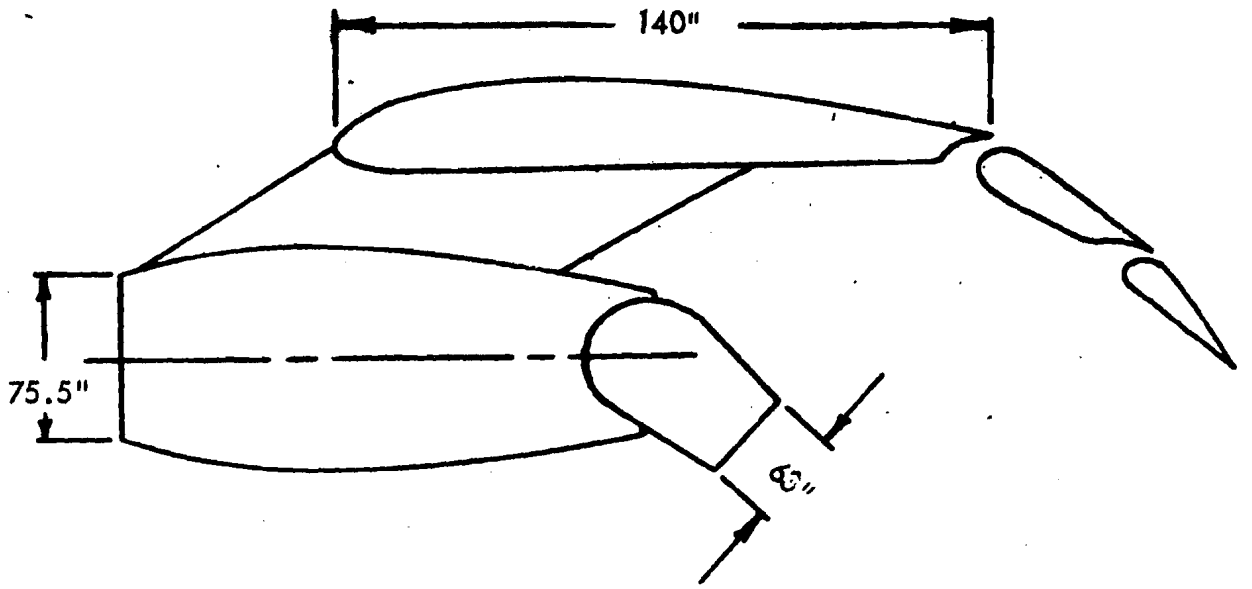


Figure 9 VT Aircraft Takeoff Configuration

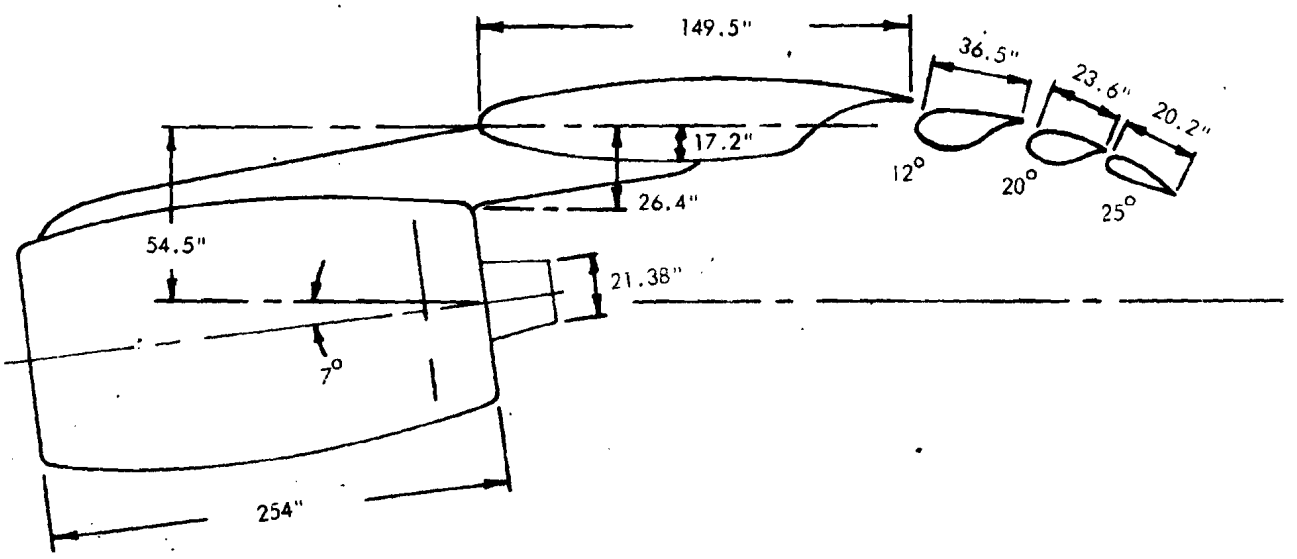


Figure 10 EBF/LSB Aircraft Takeoff Configuration

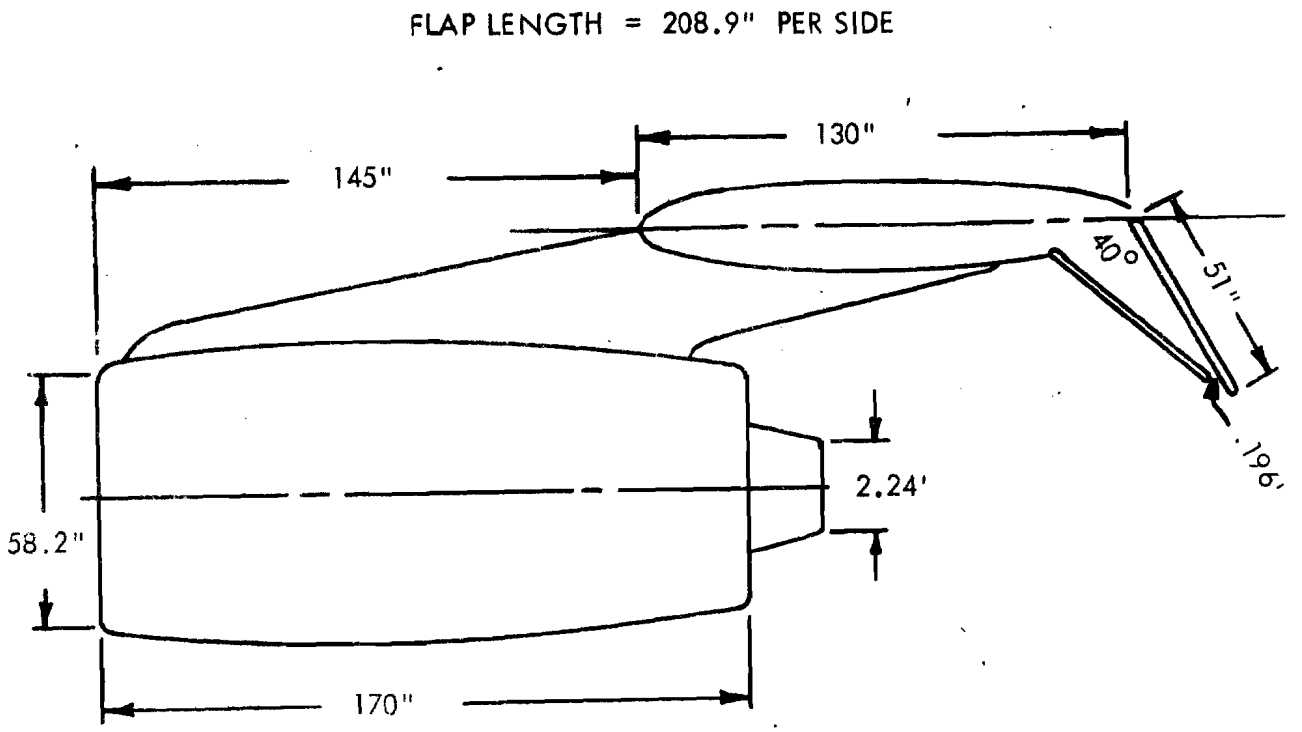


Figure 11 AIBF Aircraft Takeoff Configuration

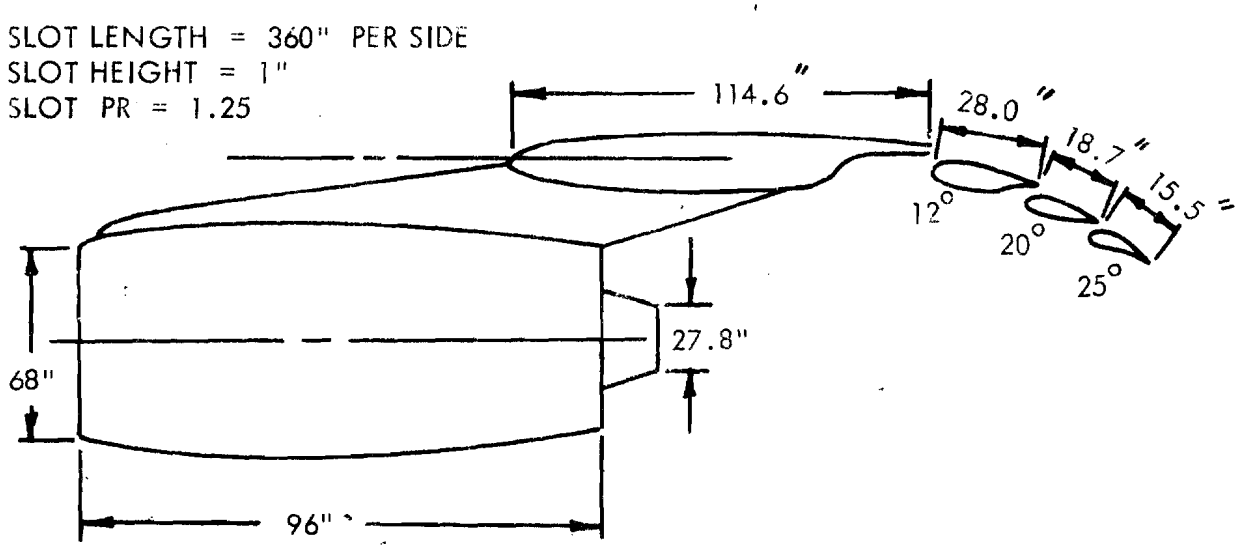


Figure 12 IBF/BLC Aircraft Takeoff Configuration

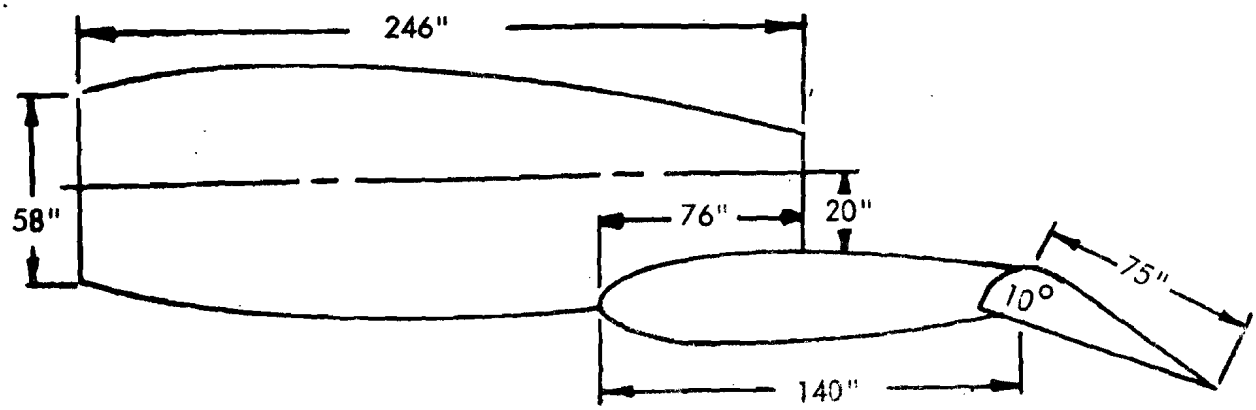


Figure 13 EBF/USB Aircraft Takeoff Configuration

FLAP LENGTH = 360" PER SIDE

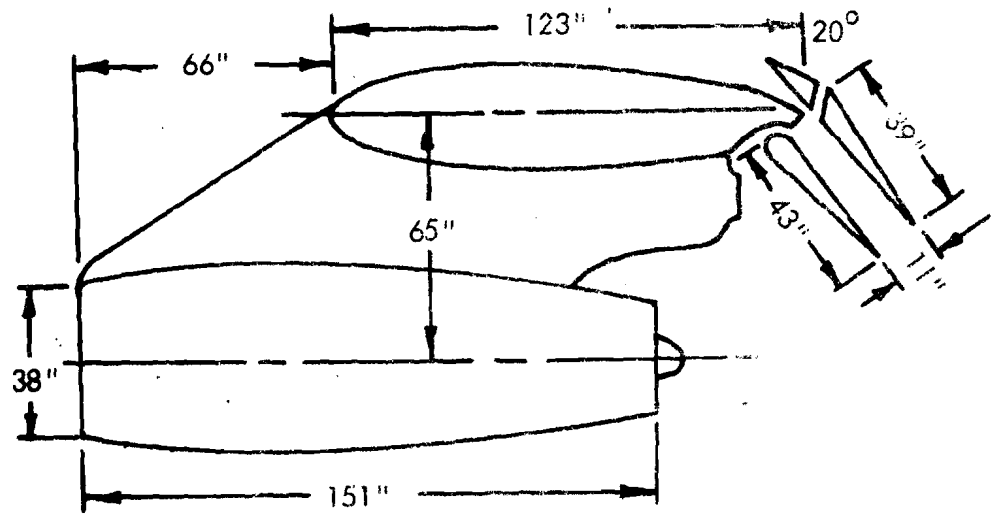


Figure 14 AW-2S Aircraft Takeoff Configuration

FLAP LENGTH = 360" PER SIDE

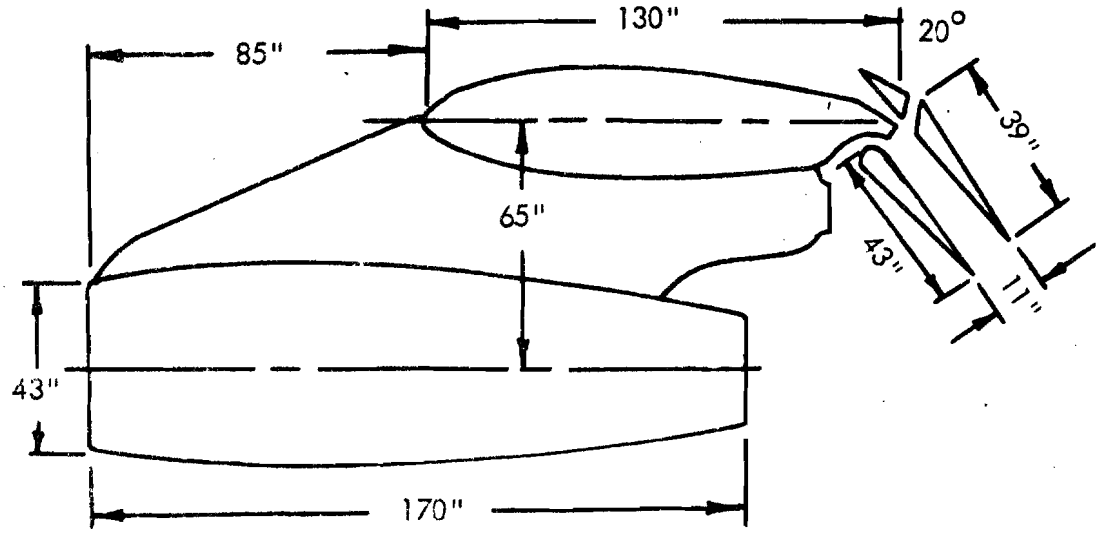


Figure 15 AW-3S Aircraft Takeoff Configuration

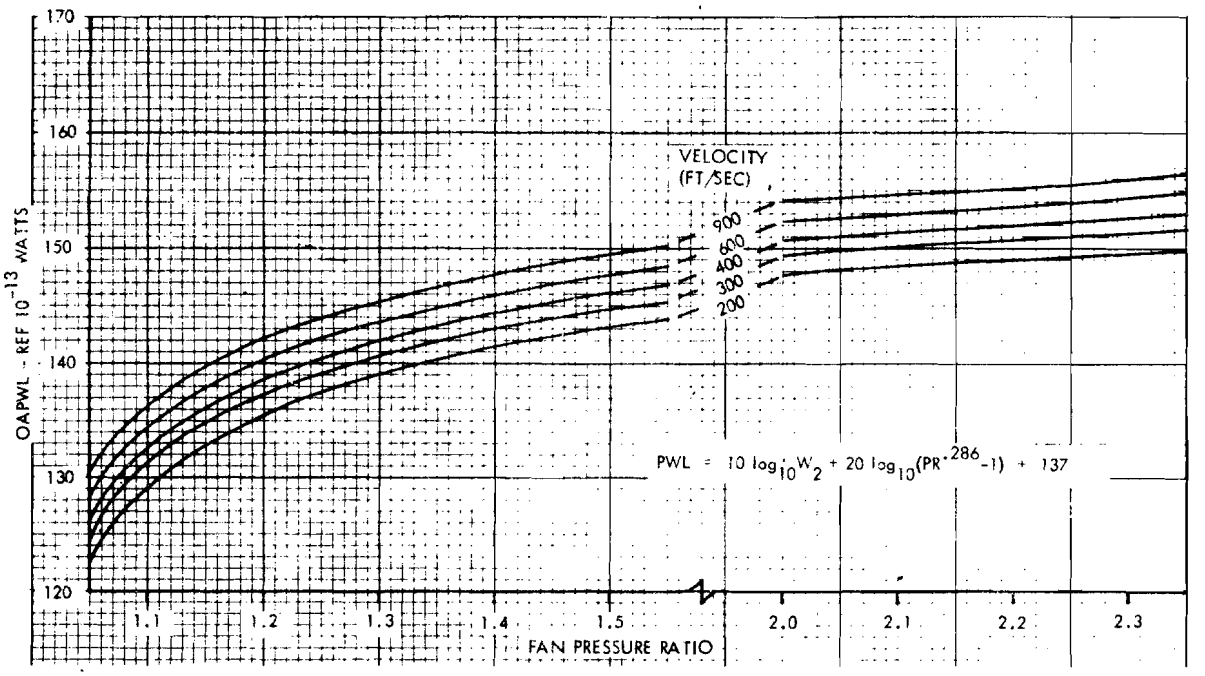


Figure 16 Fixed Pitch Fan Noise

| | VT | EBF/LSB | AIBF | IBF/BLC | EBF/USB | AW-2S | AW-3S |
|---|---|---|---|---|---|---|---|
| Passengers | 100 | 100 | 100 | 100 | 100 | 100 | 100 |
| Runway Length - Ft | 2,000 | 2,000 | 2,000 | 2,000 | 2,000 | 2,000 | 2,000 |
| Takeoff Gross Wt - Lbs | 157,000 | 105,550 | 105,029 | 110,000 | 97,000 | 98,000 | 105,158 |
| Wing Loading - Lb/Ft$^2$ | 63 | 73 | 83 | 78 | 100 | 86 | 87 |
| Thrust to Weight Ratio | .52 | .571 | .550 | .50 | .50 | .405 | .435 |
| Engine Thrust - Lbs | 20,000 | 16,245 | 15,714 | 16,200 | 13,200 | 10,600 | 13,470 |
| Bypass Ratio | 14.8 | 17.4 | 14.8 | 14.8 | 14.8 | 2.28 | 6.4 |
| Fan Diameter - Ft | 6.3 | 5.9 | 5.44 | 5.68 | 5.0 | 3.08 | 4.34 |
| Fan Tip Speed - Ft/Sec | 1,040 | 750 | 1,040 | 1,040 | 1,040 | Unknown | 750 |
| Fan Pressure Ratio | 1.3 | 1.25 | 1.3 | 1.3 | 1.3 | 3.0 | 1.25 |
| Inlet Air Flow - Lb/Sec | 934 | 822 | 728 | 755 | 611 | 268 | 456 |
| Core Gas Flow - Lb/Sec | 60.5 | 51.0 | 47.5 | 49.0 | 39.8 | 89.5 | 62.8 |
| Core Nozzle Pressure Ratio | 1.1 | 1.1 | 1.1 | 1.1 | 1.1 | 1.141 | 1.1 |
| Core Nozzle Area - Ft$^2$ | 5.25 | 2.44 | 3.94 | 2.64 | 2.15 | 3.95 | 5.2 |
| Core Exhaust Thrust - Lb | 1,293 | 980 | 1,020 | 1,050 | 854 | 197 | 1,364 |
| Core Nozzle Velocity - Ft/Sec | 700 | 700 | 700 | 700 | 700 | 774 | 706 |
| Core Exhaust Temp - $^{o}$R | 1,629 | 1,529 | 1,527 | 1,629 | 1,527 | 1,411 | 1,524 |
| Fan Nozzle Air Flow - Lb/Sec | 873.6 | 778 | 511 | 544 | 575 | | 205 |
| Fan Exhaust Pressure Ratio | 1.3 | 1.25 | 1.3 | 1.3 | 1.3 | | 1.25 |
| Fan Nozzle Area - Ft$^2$ | 16.5 | 15.95 | 9.3 | 9.9 | 10.9 | | 12.3 |
| Fan Exhaust Thrust - Lbs | 18,690 | 15,270 | 11,100 | 9,580 | 12,300 | | 4,042 |
| Fan Nozzle Velocity - Ft/Sec | 685 | 650 | 718 | 720 | 718 | | 650 |
| Fan Exhaust Temp - $^{o}$R | 602 | 556 | 602 | 602 | 602 | | 556 |
| Wing Nozzle Air Flow - Lb/Sec | | | 176 | 262 | | 187 | 189 |
| Wing Exhaust PR | | | 1.3 | 1.3 | | 2.55 | 2.12 |
| Wing Nozzle Area - Ft$^2$ | | | 3.41 | 5.0 | | 27.5 | 27.5 |
| Wing Exhaust Thrust - Lbs | | | 2,600 | 5,570 | | 8,650 | 8,064 |
| Wing Nozzle Velocity - Ft/Sec | | | 675 | 685 | | 1,400 | 1,200 |
| Wing Exhaust Temp - $^{o}$R | | | 602 | 602 | | 747 | 695 |

Table 1 Baseline Aircraft Characteristics

- Non-engine aerodynamic noise
- Auxiliary equipment noise

Basic Engine Noise

Each of the engines for the aircraft systems has high bypass and low nozzle exhaust pressure ratios. Therefore, for purposes of this analysis the forward and aft fan noise are considered to be the predominant noise sources. Propulsion parameters and resulting basic engine sound power levels for each baseline aircraft are given in Table 2. Figure 16 was used to obtain the results.

Augmented Lift System Noise

Noise sources associated with augmented lift system noise consist of:

- Engine nozzle jet noise (ENJN)
- Flap wake noise (FWN)
- Flap scrubbing noise (FSN)
- Wing nozzle jet noise (WNJN)
- Flap trailing edge separation noise (FTESN)

The sound power level for each of the sources was determined by equations A-1 thru A-5.

ENJN: $$PWL = -100.0 + 80 \log_{10} U + 10 \log_{10} A \qquad \text{(A-1)}$$

WNJN: $$PWL = -95 + 80 \log_{10} U + 10 \log_{10} A \qquad \text{(A-2)}$$

FWN: $$PWL = -93 + 10 \log_{10} \delta + 10 \log_{10} W + 80 \log_{10} V \qquad \text{(A-3)}$$

FSN: $$PWL = 53.7 + 10 \log_{10} \rho + 10 \log_{10} A - 30 \log_{10} C + 60 \log_{10} V + .33\theta \qquad \text{(A-4)}$$

FTESN: $$PWL = -6.7 + 10 \log_{10} \delta + 10 \log_{10} W + 50 \log_{10} V + .2\theta \qquad \text{(A-5)}$$

PWL = Sound power level (Ref. $10^{-1}$

U = Nozzle exhaust velocity (ft./sec.)

A = Applicable area (ft.$^2$)

| | W | PR | PWL |
|---|---|---|---|
| | #/sec. | | Ref., $10^{-13}$ watts |
| VT | 934 | 1.3 | 144.5 |
| EBF/LSB | 822 | 1.25 | 142.5 |
| AIBF | 728 | 1.3 | 143.5 |
| IBF/BLC | 534 | 1.3 | 142.0 |
| EBF/USB | 611 | 1.3 | 143.0 |
| AW-2S | 268 | 2.28 | 149.5 |
| AW-3S | 456 | 1.25 | 140.0 |

Table 2 Basic Engine Noise

| | VT | EBF/LSB | AIBF | IBF/BLC | AW-2S | AW-3S | EBF/USB |
|---|---|---|---|---|---|---|---|
| ENJN | 143.9 | 143.9 | - | - | - | - | 141.4 |
| FWN | - | 139.6 | - | 77.8 | - | - | 134.2 |
| FSN | - | 145.3 | - | 137.2 | 157.3 | 153.8 | 121.6 |
| WNJN | - | - | 134.7 | 136.6 | 168.2 | 162.9 | - |
| FTESN | - | 144.1 | - | 100.7 | 152.0 | 148.8 | 130.5 |
| Total: | 143.9 | 152.0 | 134.7 | 141.1 | 169.0 | 163.0 | 143.4 |

Table 3 Powered Lift System Noise Source

$\delta$ = Boundary layer thickness (ft.)

W = Width of jet stream (ft.)

$\rho$ = Density of exhaust fluid (slugs/ft.$^3$)

C = Speed of sound in ambient air (ft./sec.)

$\theta$ = Flap angle (degrees)

Table 3 gives values which were obtained for each of the V/STOL aircraft augmented lift systems by application of equations A-1 thru A-5.

Non-Engine Aerodynamic Noise

Non-engine aerodynamic noise was calculated by use of equation A-6.

$$PWL = 10 \log_{10} \left(VEL^4 \times \frac{Weight}{CL} \times \frac{Chord}{Span} \times \frac{P_o}{Temp}\right) + K \qquad (A-6)$$

K = 27.5 for a clean aerodynamic configuration

K = 34.5 for a dirty aerodynamic configuration

PWL = Sound power level (Ref. $10^{-13}$ watts)

VEL = Aircraft velocity (knots)

Weight = Takeoff gross weight

CL = Coefficient of lift

Chord = Average wing chord length (ft.)

Span = Average wing span (ft.)

$P_o$ = Atmospheric pressure (millibars)

Temp = Atmospheric temperature ($^oK$)

Table 4 gives calculated values for clean and dirty aerodynamic configurations. (The dirty configuration reflects landing gear down, extended flaps, etc.). Table 5 gives the parameters used for making the calculations.

Auxiliary Equipment Noise

The auxiliary equipment noise is composed of two sources: auxiliary power unit and environmental control system equipment. The auxiliary power unit is the predominant source and will be considered as the noise source for purposes of this analysis. The basic noise value used for the analysis was

| | CLEAN CONFIGURATION | DIRTY CONFIGURATION |
|---|---|---|
| | PWL (Ref $10^{-13}$ watts) | |
| VT | 121.4 | 128.4 |
| EBF/LSB | 119.7 | 126.7 |
| AIBF | 119.4 | 126.4 |
| IBF/BLC | 118.5 | 125.5 |
| EBF/USB | 118.4 | 125.4 |
| AW-2S | 120.0 | 127.0 |
| AW-3S | 119.6 | 126.6 |

Table 4 Non-Engine Aerodynamic Noise

| | VT | EBF/LSB | AIBF | IBF/BLC | EBF/USB | AW-2S | AW-3S |
|---|---|---|---|---|---|---|---|
| VEL Knots | 80 | 80 | 80 | 80 | 80 | 80 | 80 |
| Dist. - Ft. | 1 | 1 | 1 | 1 | 1 | 1 | 1 |
| Weight - Lbs. | 157,000 | 105,000 | 105,029 | 98,000 | 97,000 | 98,000 | 105,185 |
| CL | 2.91 | 3.37 | 3.72 | 4.38 | 4.6 | 3.16 | 4.0 |
| Chord - Ft. | 19.5 | 14.9 | 14.0 | 12.7 | 12.3 | 13.7 | 13.7 |
| Span - Ft. | 127.0 | 96.5 | 90.8 | 82.6 | 79.4 | 86.0 | 88.5 |
| $P_o$ - Millibar | 1040 | 1040 | 1040 | 1040 | 1040 | 1040 | 1040 |
| Temp - $^oK$ | 294 | 294 | 294 | 294 | 294 | 294 | 294 |

Table 5 Parameters For Calculation Of Non-Engine Aerodynamic Noise

115 dBA at 10 feet from the APU exhaust.

Conclusions

Table 6 gives a summary of the ranking of major noise sources for four engine aircraft configurations. It can be observed that the non-engine aerodynamic and auxiliary equipment noise sources are not of importance unless the basic engine and powered lift system noise are sufficiently reduced. Figures 17 through 23 show levels of the major noise sources associated with each V/STOL aircraft system. The shaded areas on the graphs represent fan and AW ejector noise attenuation which is believed to be possible through existing technology. It should be noted that engine exhaust velocities for the engines (approximately 700 feet/second) produce sound power levels on the order of 142 dB which forms a lower boundary for reduction of basic engine noise. The dashed line corresponds to the level of non-engine aerodynamic noise and therefore provides a floor beyond which aircraft noise reduction may not be feasible. The solid line adjacent to the powered lift system noise bar provides a rough estimate of the augmented lift system noise reduction required to reduce the noise to 95 EPNdB at 500 feet from the aircraft.

Table A-6. V/STOL Aircraft Noise - 4-Engine

| | BASIC ENGINE | POWERED LIFT SYSTEM | NON-ENGINE AERODYNAMIC | AUXILIARY EQUIPMENT |
|---|---|---|---|---|
| VT | 153.5 | 149.9 | 128.4 | 126.9 |
| EBF/LSB | 151.5 | 158.0 | 126.7 | 126.9 |
| AIBF | 152.5 | 140.7 | 126.4 | 126.9 |
| IBF/BLC | 151.1 | 144.4 | 125.5 | 126.9 |
| EBF/USB | 152.4 | 149.4 | 125.4 | 126.9 |
| AW-2S | 158.6 | 172.0 | 127.0 | 126.9 |
| AW-3S | 149.0 | 165.0 | 126.6 | 126.9 |

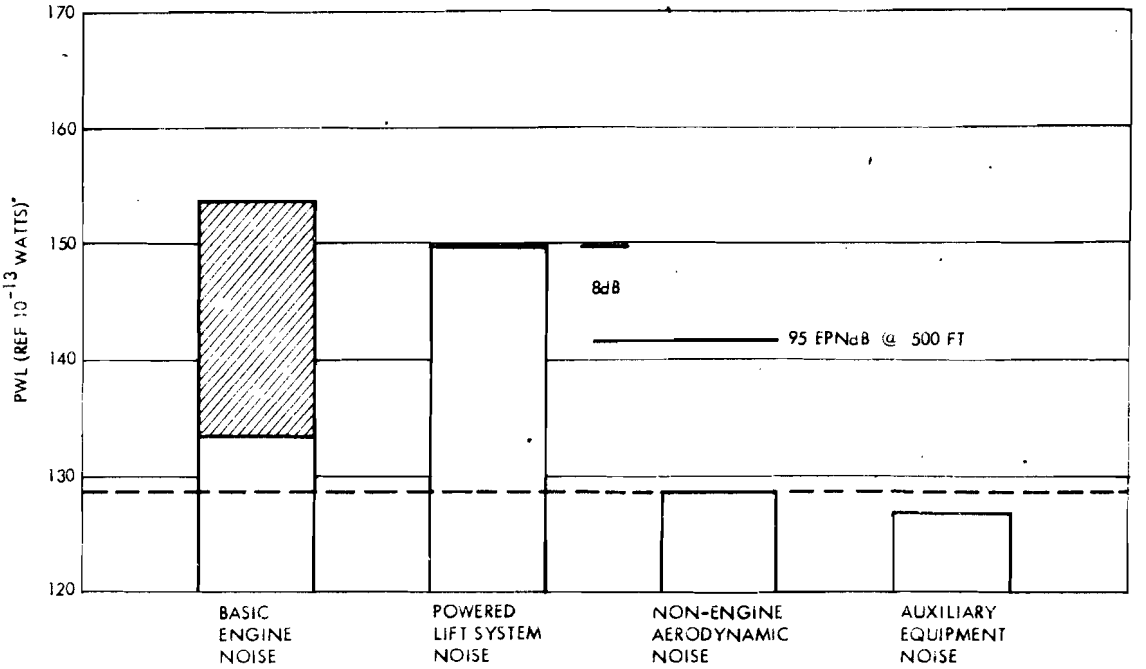


Figure 17 VT Aircraft: Noise Source Ranking

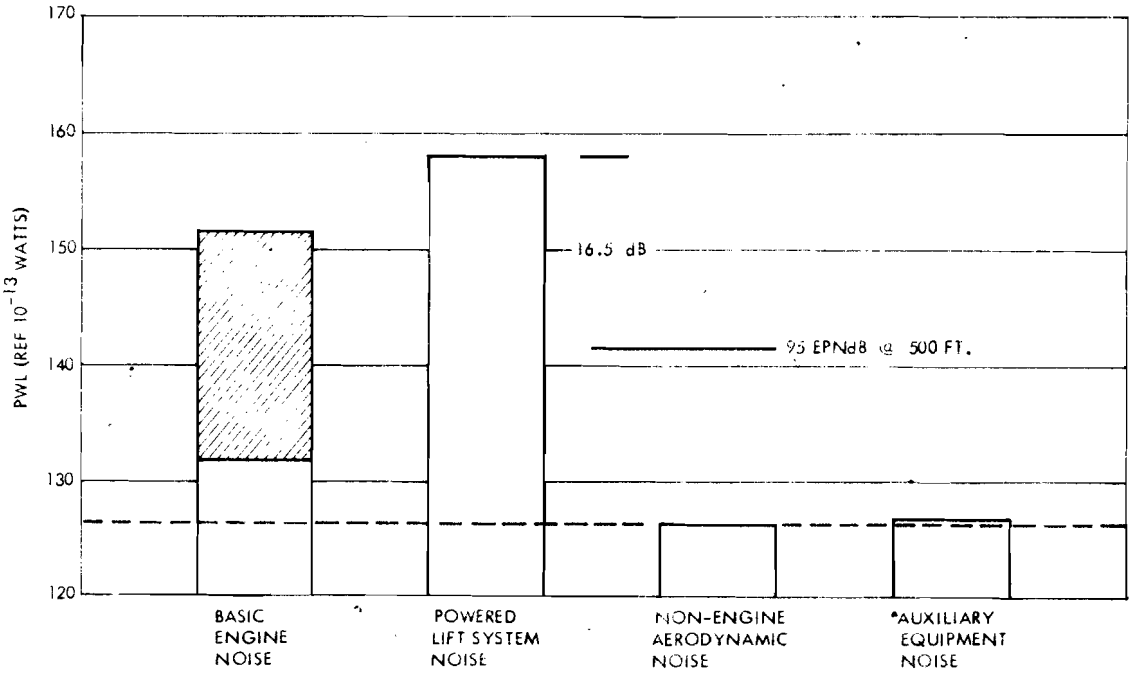


Figure 18 EBF/LSB Aircraft: Noise Source Ranking

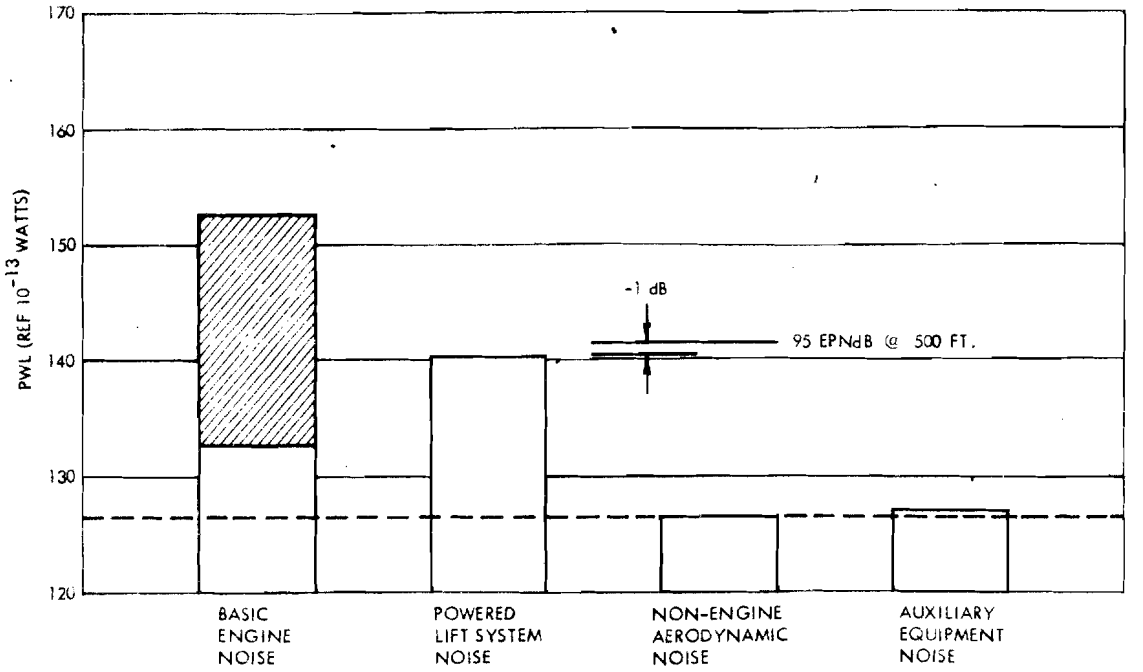


Figure 19 AIBF Aircraft: Noise Source Ranking

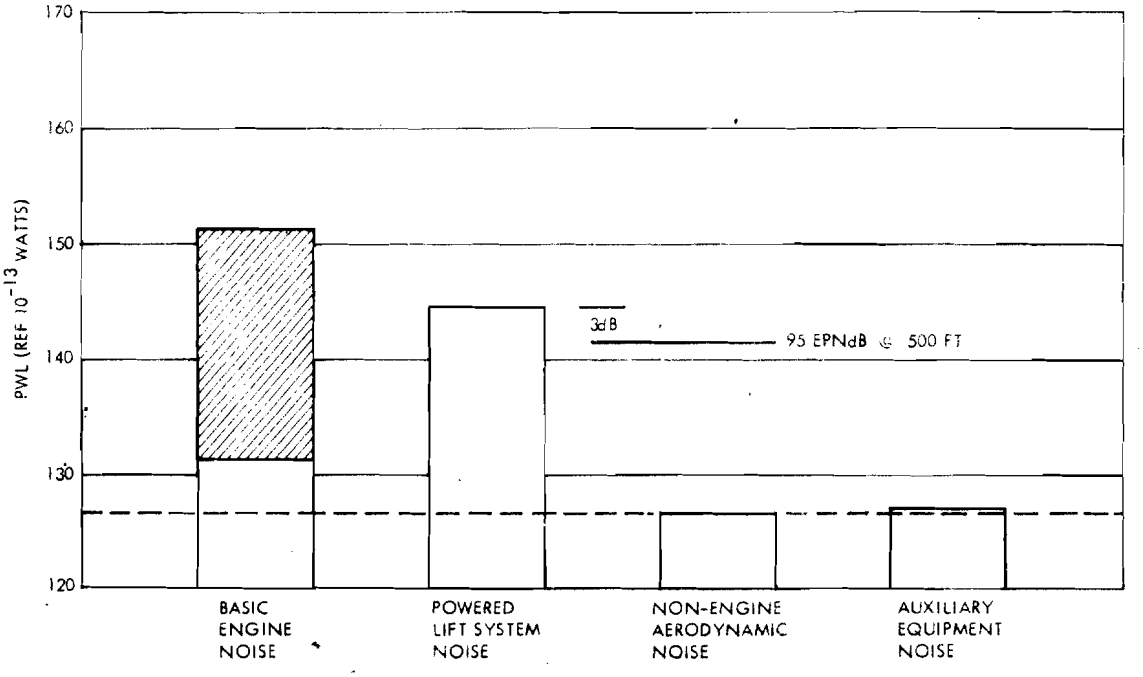


Figure 20 IBF/BLC Aircraft: Noise Source Ranking

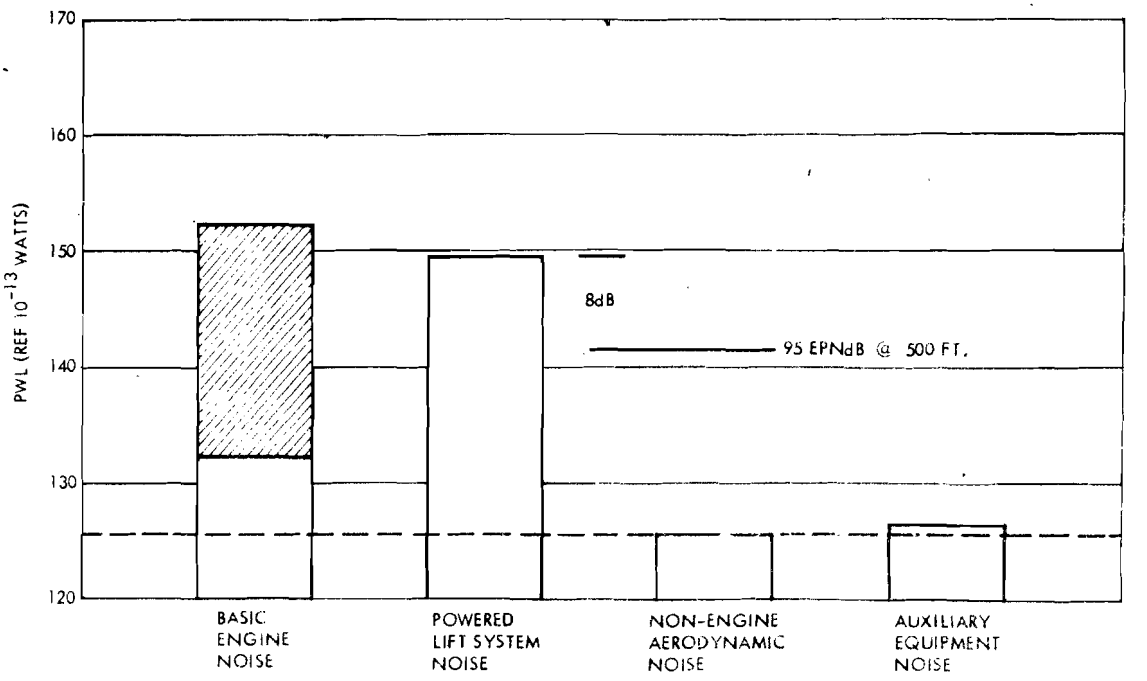


Figure 21 EBF/USB Aircraft: Noise Source Ranking

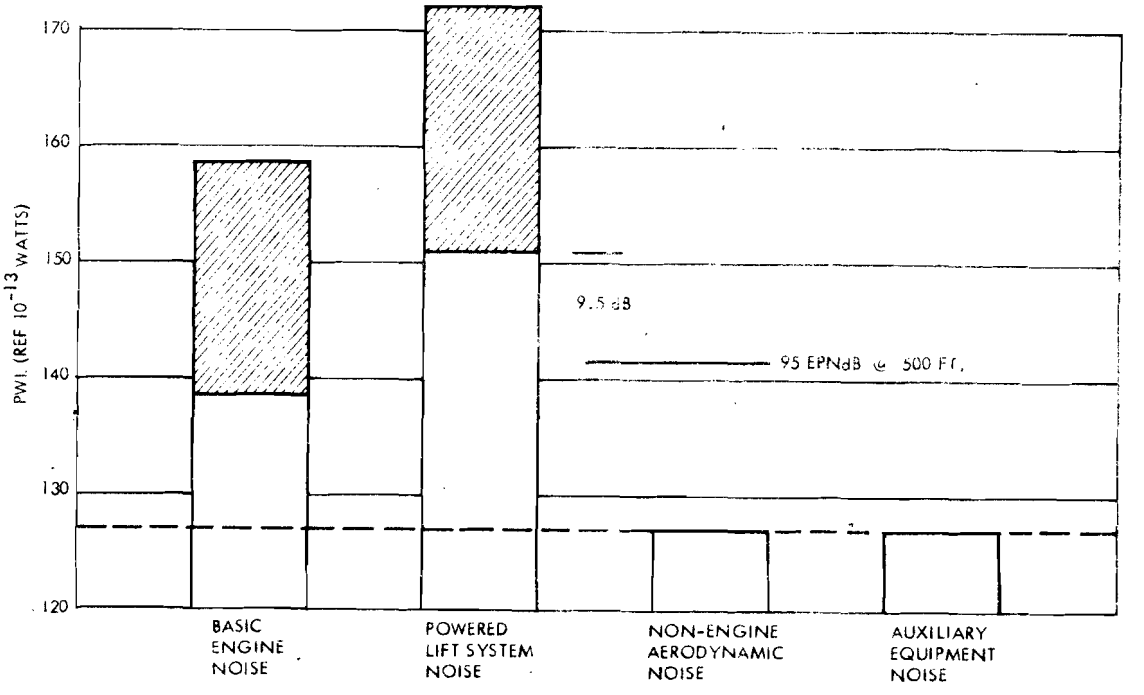


Figure 22 AW-2S Aircraft: Noise Source Ranking

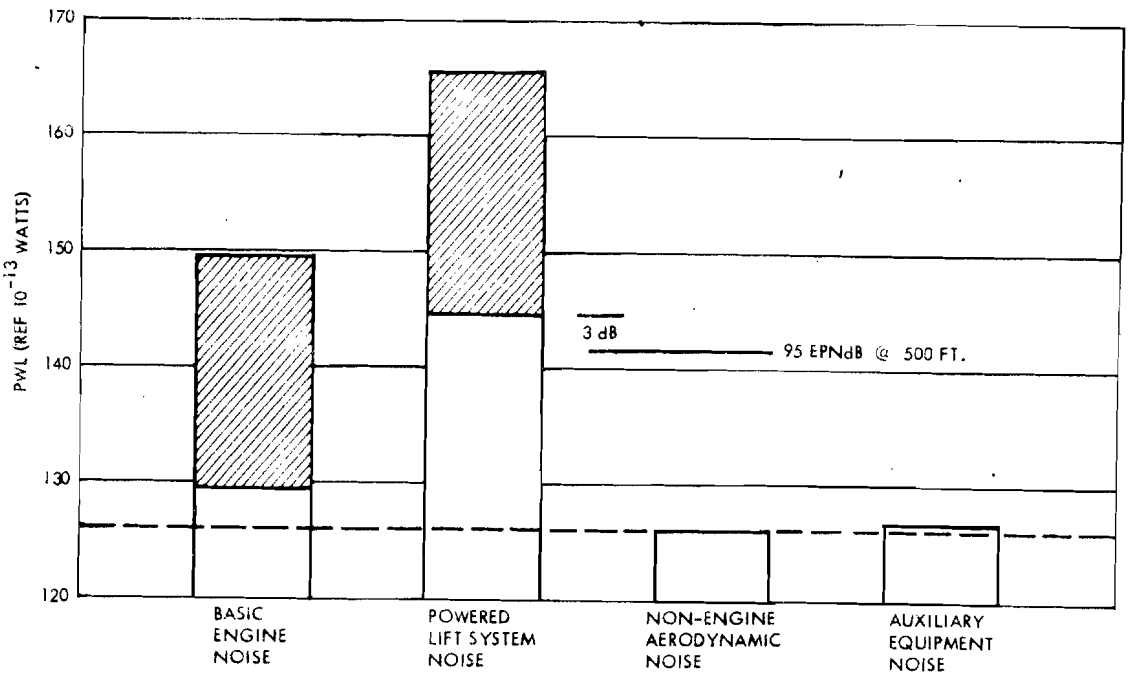


Figure 23 AW-3S Aircraft: Noise Source Ranking

Magnitude of powered lift system noise sources shown in Table 3 indicate that each of the sources is significant and should not be eliminated from consideration. It should be noted that the rankings of the noise sources are based on sound power levels. Shielding and directivity are not considered. Therefore, the values given cannot be utilized for comparison of one aircraft system with another at an observer location in the far field. Also, the baseline aircraft configurations were picked for purposes of estimating noise levels for specific augmented lift system concepts and, therefore, do not represent optimized flight configurations.

## IDENTIFICATION OF ROTARY PROPULSOR NOISE SOURCES

Rotary propulsors of the following type were reviewed by the contractor.

- Propellers
- Helicopter Rotors
- Shrouded Propellers
- Propfans
- Lift Fans

After this review, sources of noise for each propulsor were identified and ranked according to the order in which they contribute to the total propulsor noise.

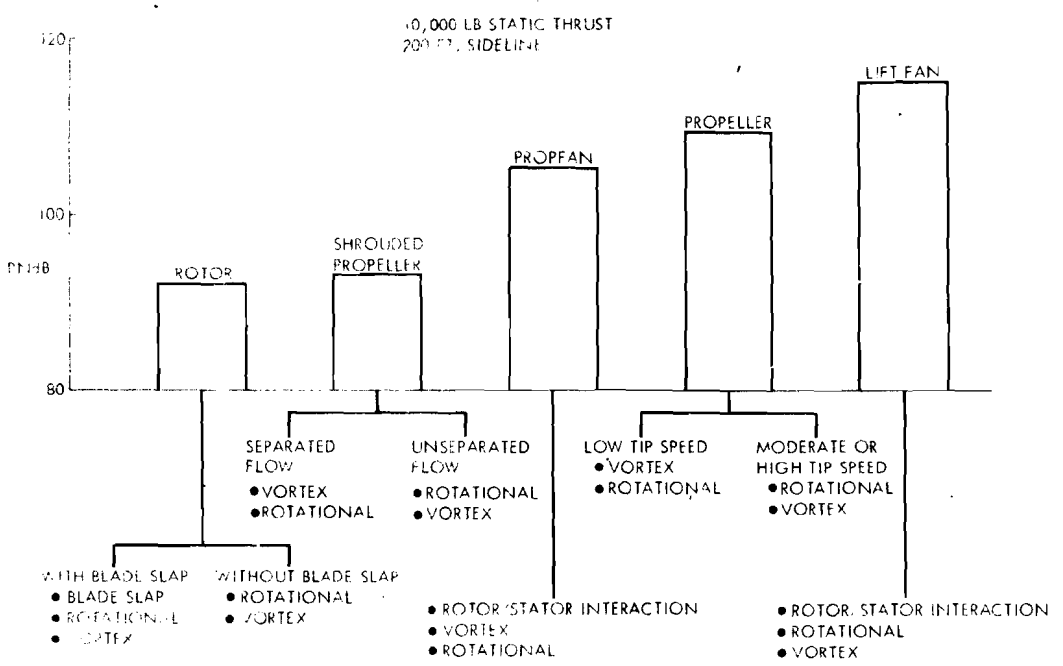


Figure 24 Rotary Propulsor Noise Source Ranking

The following aerodynamic noise generators were determined to be major noise sources associated with rotary propulsors:

a. Rotational Noise (rotating blade pressure field)

b. Vortex Noise (primarily vortex flow shed from trailing edge.)

c. Interaction and Distortion Effects

- blade slap
- rotor/stator interaction

d. Turbulence-Induced Noise (inflow conditions)

Typical composite propulsor noise and ranking of individual noise sources for each propulsor are shown in Figure 24. It is important to note that total noise shown in the figure for each propulsor is based on 10,000 pounds static thrust. Propulsion parameters for each propulsor were selected from generalized performance curves of previously designed systems. Therefore, noise levels predicted are not necessarily optimized for each propulsor. Values shown present general trends for comparing noise of the five rotary propulsor systems. Total noise for the rotor does not include blade slap, and total noise for the shrouded propeller does not account for separated flow. Unshrouded propeller noise was calculated for moderate tip speed operation.

A shrouded propeller has approximately twice the thrust of an equal-size propeller in static operation. This tremendous thrust ratio is significantly reduced as forward speed is introduced. Therefore, if forward speed were considered, the size, tip speed, horsepower requirement, and total noise of the shrouded propeller would approach that of the plain propeller.

It is also important to point out that the rotor and lift fan are designed for a VTOL aircraft which requires a thrust to weight ratio of 1.2. The other three propulsors are designed for STOL aircraft which usually have a thrust-to-weight ratio of around 0.6. Therefore, if all were sized to power a given weight aircraft the lift fan and rotor would have to produce about 2.0 times the thrust required of the propeller, shrouded propeller, or propfan.

Inlet air flow with high turbulence levels tends to drive the total noise upward, usually by amplifying the vortex noise and rotational noise of the propulsor. As a method was not found to predict the noise increase resulting from this turbulent inflow, values shown are for non-turbulent inflow. It is estimated, based on test results, that the noise of a lift fan may be increased as much as 10 dB by a crossflow in the inlet.

## DEVELOPMENT OF PREDICTION TECHNIQUES FROM NOISE GENERATION MECHANISMS

A hand calculation prediction method was developed to evaluate noise characteristics associated with the V/STOL aircraft augmented lift systems shown in Figure 25. The hand calculation methods which follow are based on extrapolation of test results reviewed. The sound power level of the nozzle exhaust are initially determined and then corrections are applied for a specific set of parameters which affect the noise characteristics.

It is anticipated that prediction methods in this section will be used primarily for making quick comparisons of sound power levels for various parameter variations. However, a complete procedure is given for making hand calculations at any desired observer location or along a sideline parallel to the aircraft centerline.

The figures in this section are classified into seven categories:

| Figure No. | Category |
|---|---|
| 26 thru 28 | General |
| 29 thru 34 | VT aircraft |
| 35 thru 44 | EBF/LSB aircraft |
| 45 thru 49 | AIBF aircraft |

| Figure No. | Category |
|---|---|
| 50 thru 55 | IBF/BLC aircraft |
| 56 thru 65 | AW aircraft |
| 66 thru 75 | EBF/USB aircraft |

The noise levels associated with each augmented lift concept can be predicted by using the specific figures shown along with Figures 26 thru 28.

An outline is given below and subsequently discussed for predicting the noise characteristics associated with a vectored thrust aircraft. Similar methods are utilized to predict noise levels for the other systems.

## VT Aircraft

Determine Sound Power Level (Follow Flow Chart, Figure 29)

| | Figure No. | Value - dB |
|---|---|---|
| PWL | 30 | |
| Turning Vane Effect | 31 | |
| Flyover Directivity | 32 | |
| 90 Degree Sideline Elevation Ang. | 33 | |
| TOTAL PWL | | |

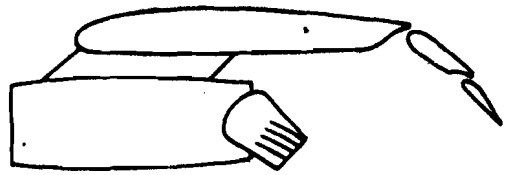

NOPT 1 = 1 VT AIRCRAFT WITH CIRCULAR NOZZLE

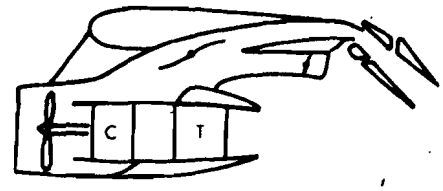


NOPT 1 = 5 AW AIRCRAFT WITH 2 STREAM ENGINE

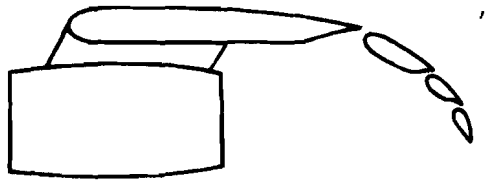

NOPT 1 = 2 EBF/LSB AIRCRAFT WITH CIRCULAR NOZZLE

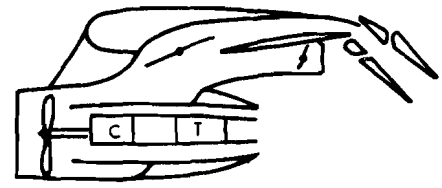


NOPT 1 = 6 AW AIRCRAFT WITH 3 STREAM ENGINE

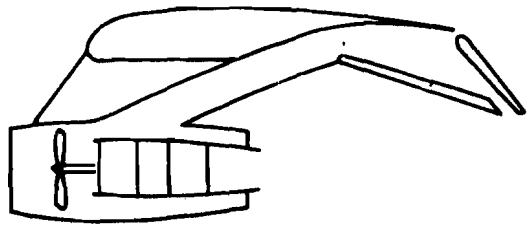

NOPT 1 = 3 AIBF AIRCRAFT

NOPT 1 = 7 EBF/USB WITH SLOT NOZZLE

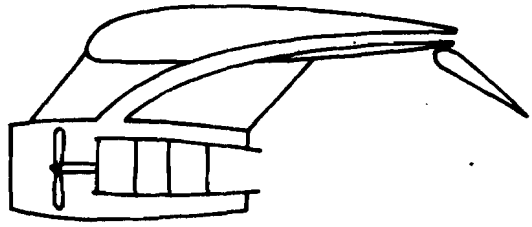

NOPT 1 = 4 IBF/BLC AIRCRAFT WITH SLOT NOZZLE

Figure 25 V/STOL Aircraft Configurations for which Prediction Methods Were Developed

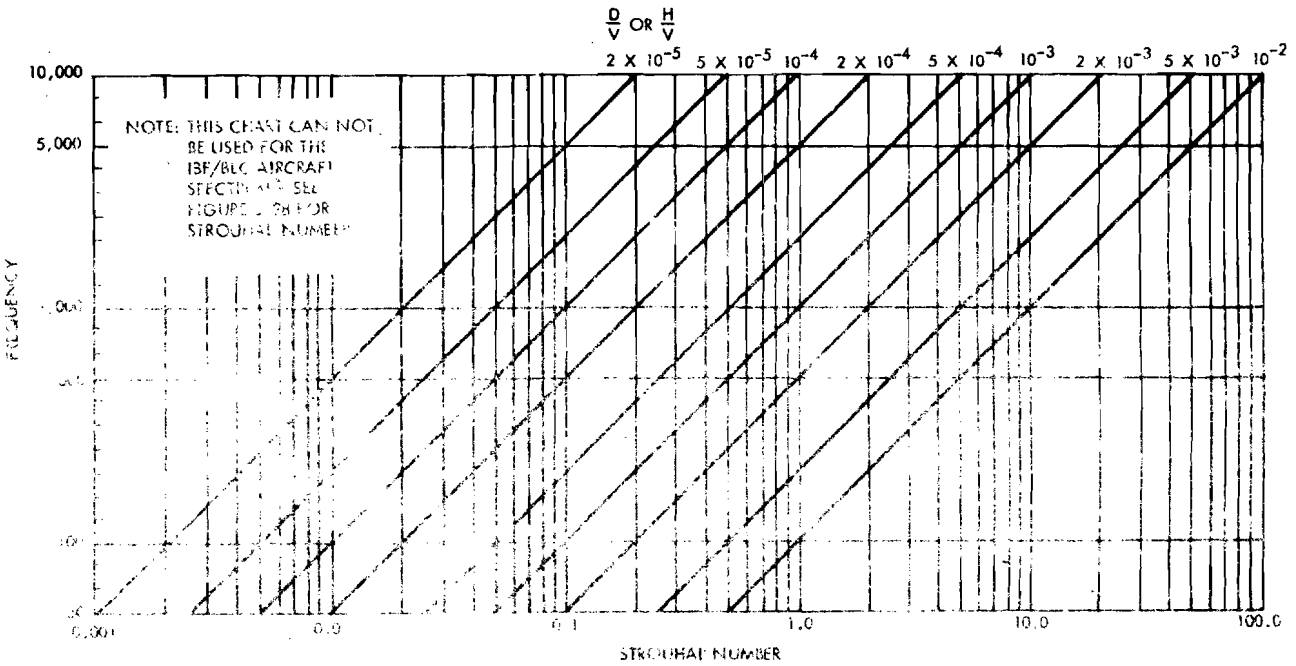


Figure 26 Chart to Determine Strouhal Number

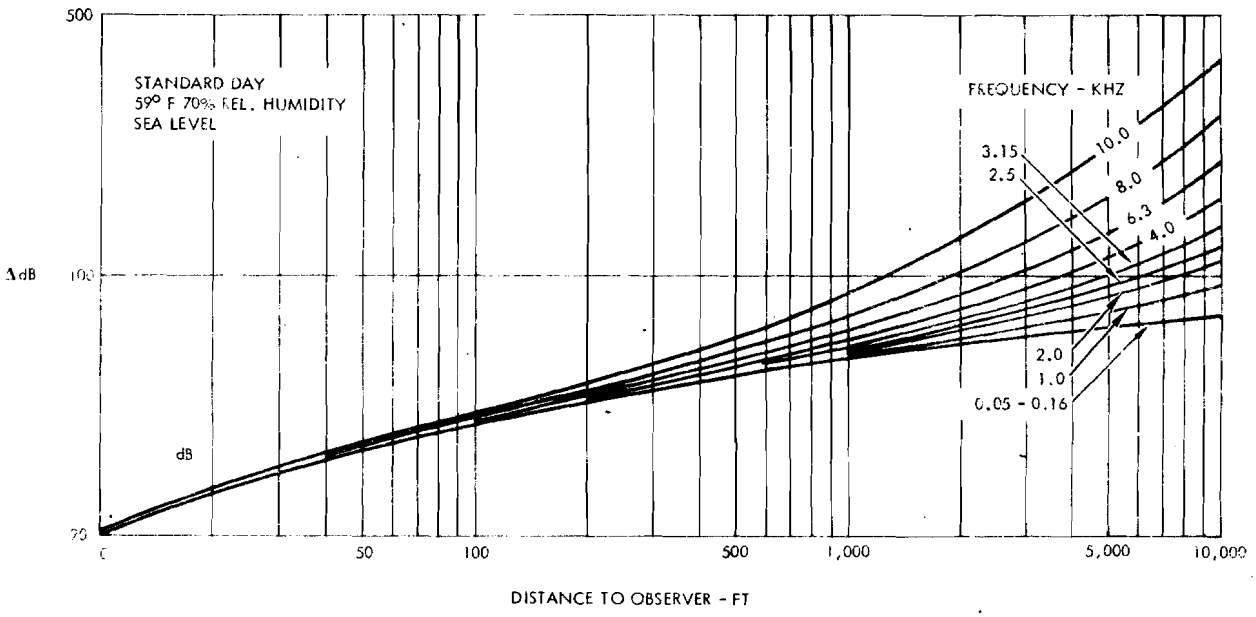


Figure 27 Acoustic Loss Between Source and Observer

**NOTE**

1. FIND DIFFERENCE IN THE TWO SOUND LEVELS.
2. READ INCREMENT FROM GRAPH.
3. ADD INCREMENT TO SOUND LEVEL WITH GREATEST MAGNITUDE.

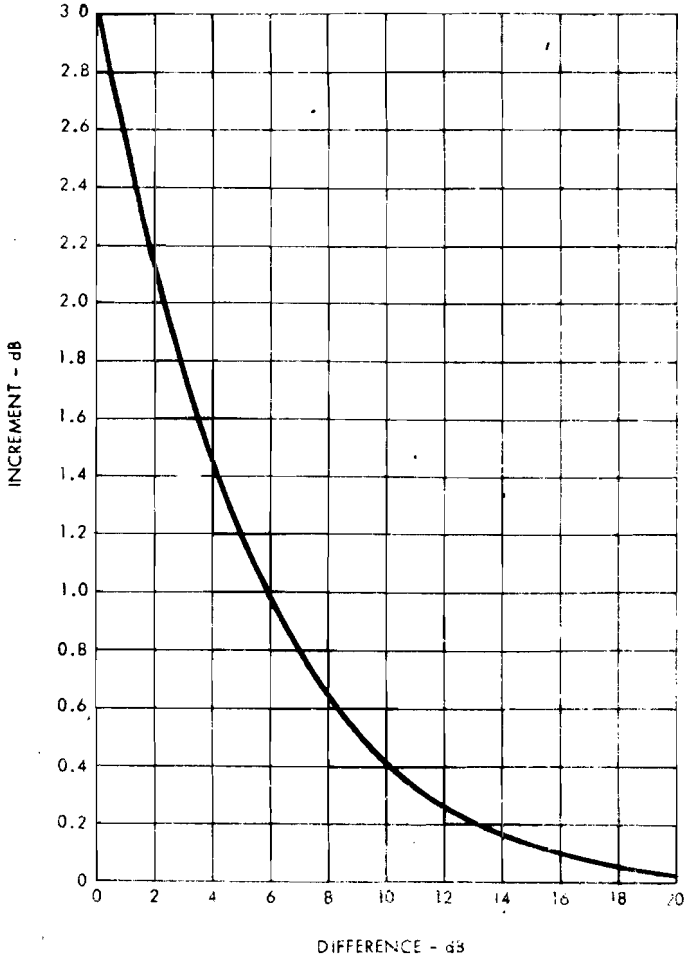


Figure 28 Addition of Two Continuous Spectrum Sound Levels

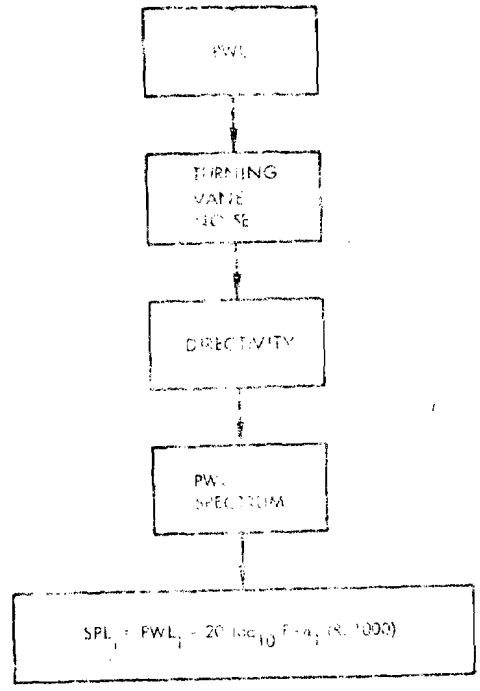


Figure 29 VT Aircraft: Noise Prediction Flow Chart

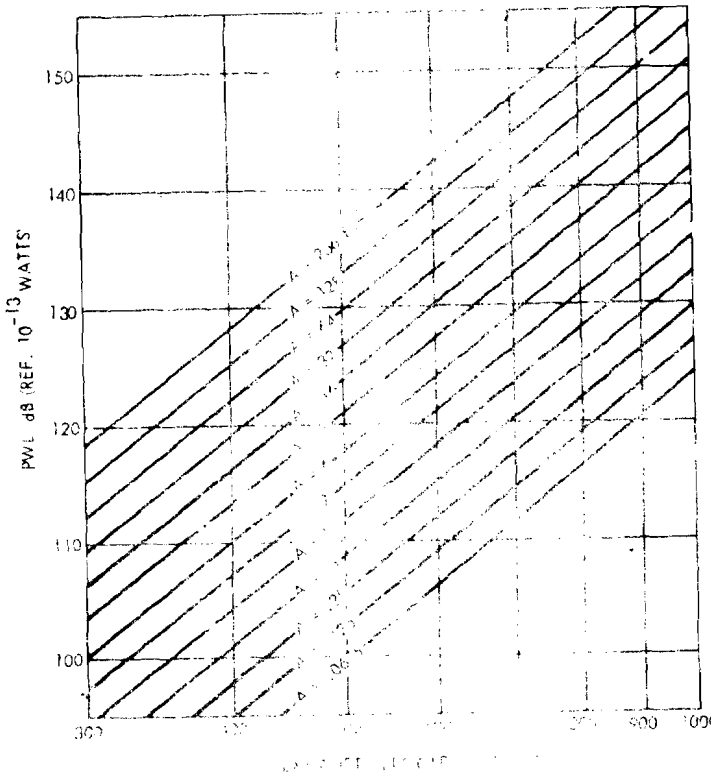


Figure 30 VT Aircraft: Sound Power Level

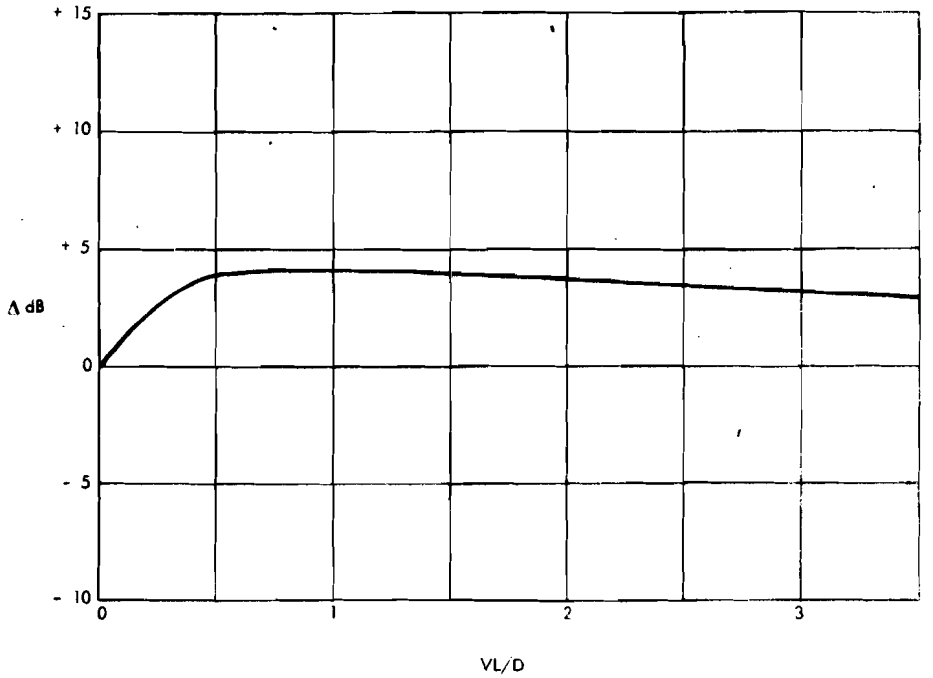


Figure 31 VT Aircraft: Effect of Turning Vane Length Variation

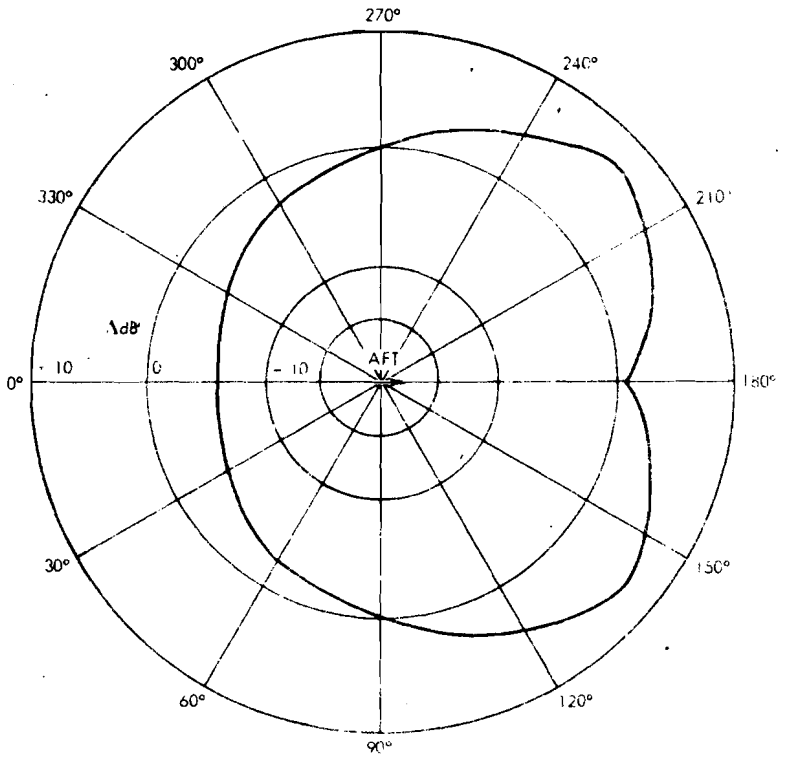


DIRECTIVITY VALUE SHOWN ON GRAPH FOR (OBSERVER ANGLE + NOZZLE ANGLE)

Figure 32 VT Aircraft: Flyover Directivity

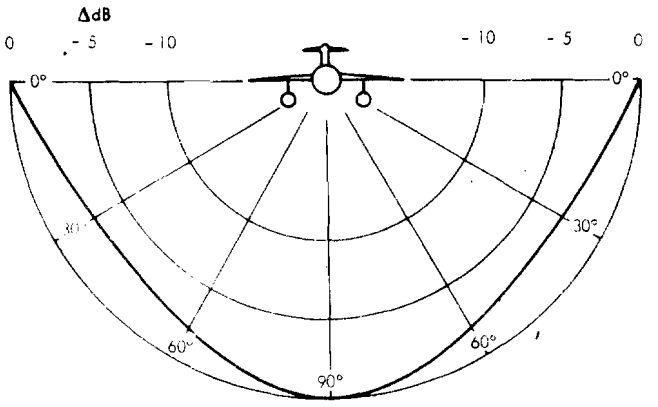


Figure 33 VT Aircraft: 90 Degree Sideline Elevation Angle Directivity

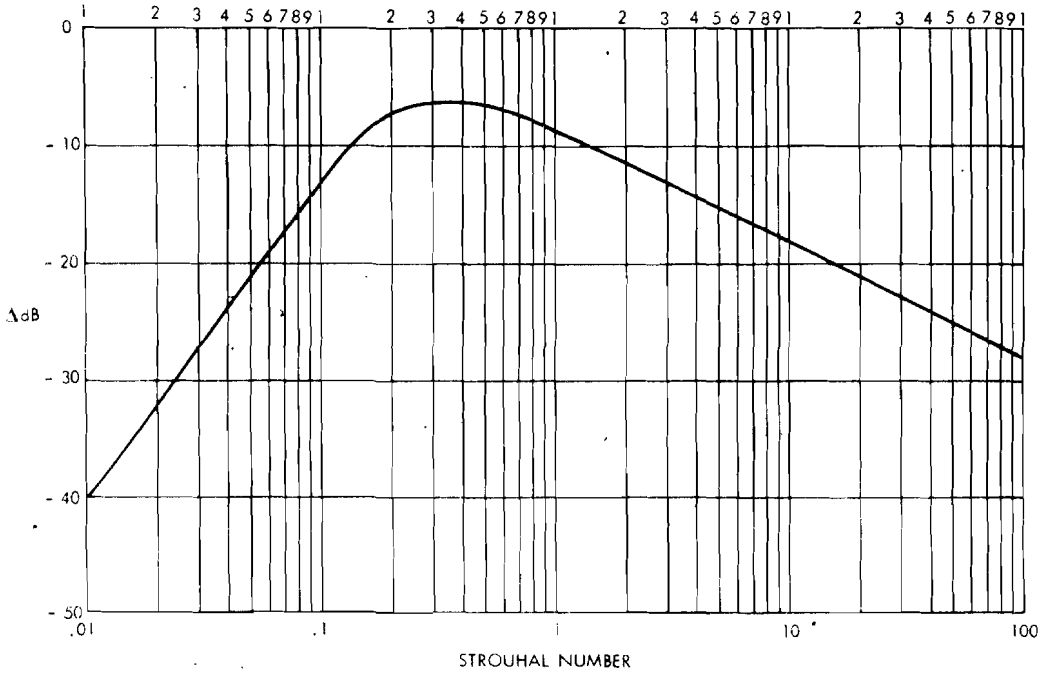


Figure 34 VT Aircraft: PWL Spectrum Shape

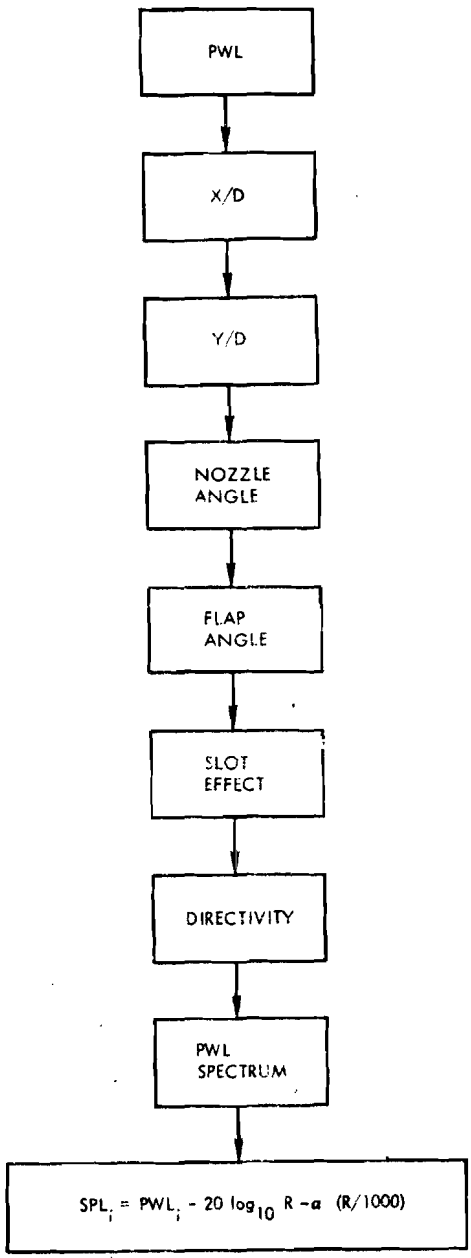


Figure 35 EBF/LSB Aircraft Noise Prediction Flow Chart

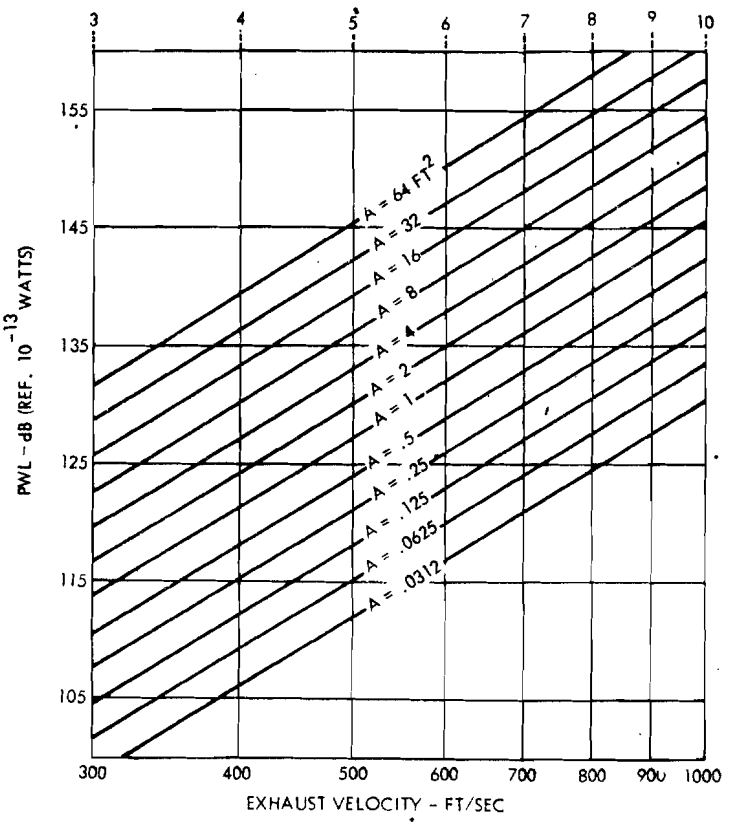


Figure 36 EBF/LSB Aircraft: Sound Power Level

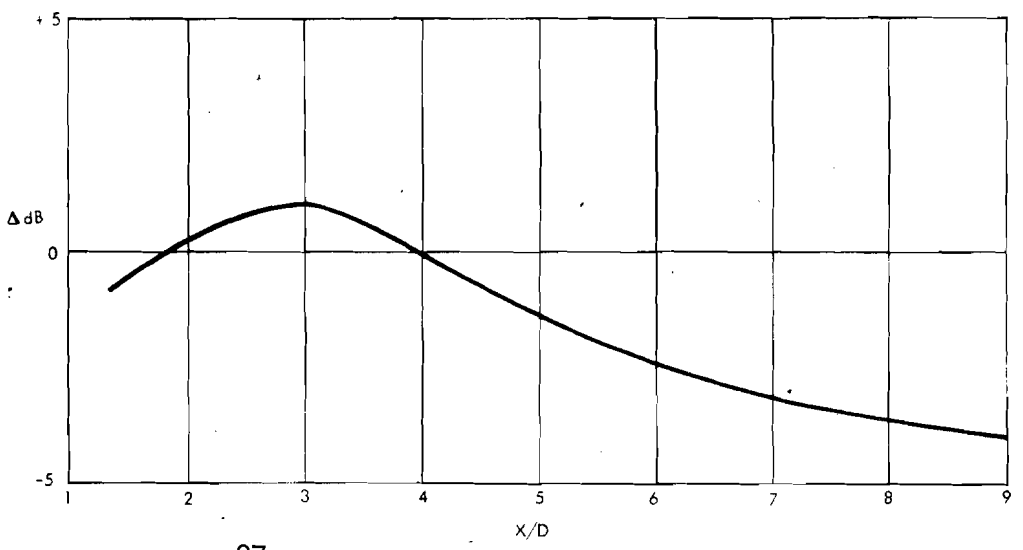


Figure 37 EBF/LSB Aircraft: Effect of X/D Variation

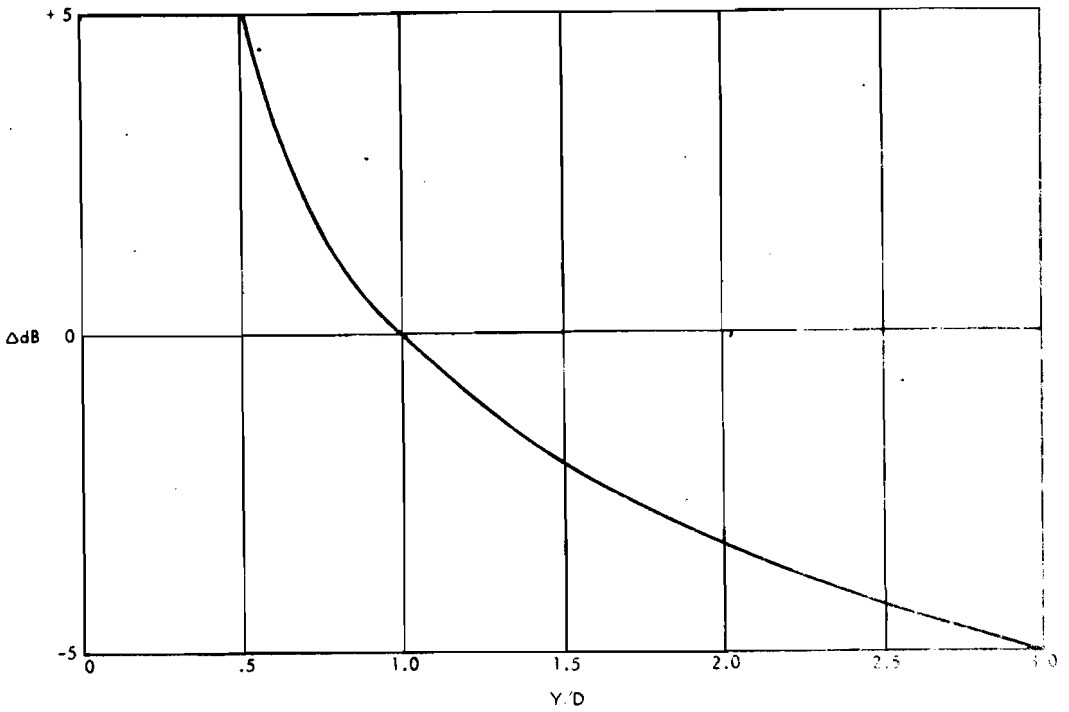


Figure 38 EBF/LSB Aircraft: Effect of Y/D Variations

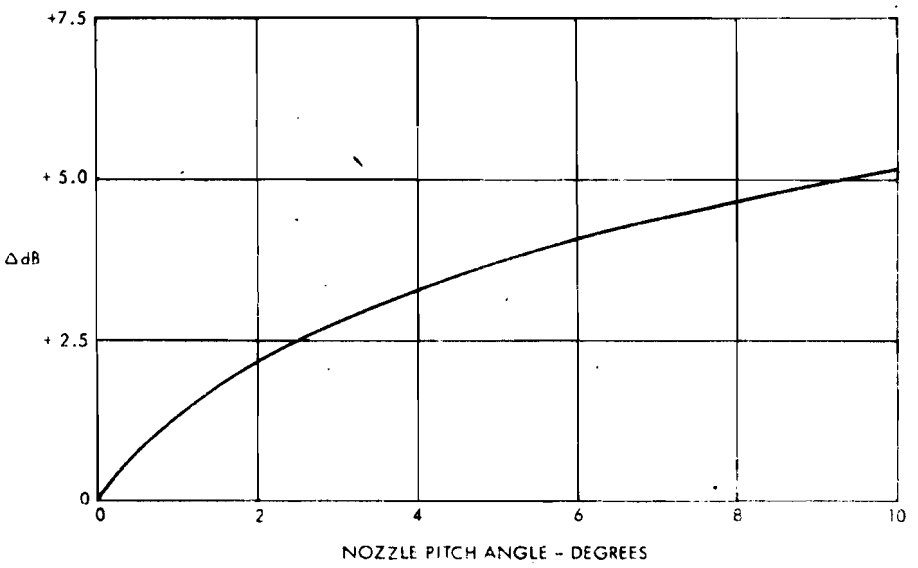


Figure 39 EBF/LSB Aircraft: Effect of Nozzle Pitch Angle Variation

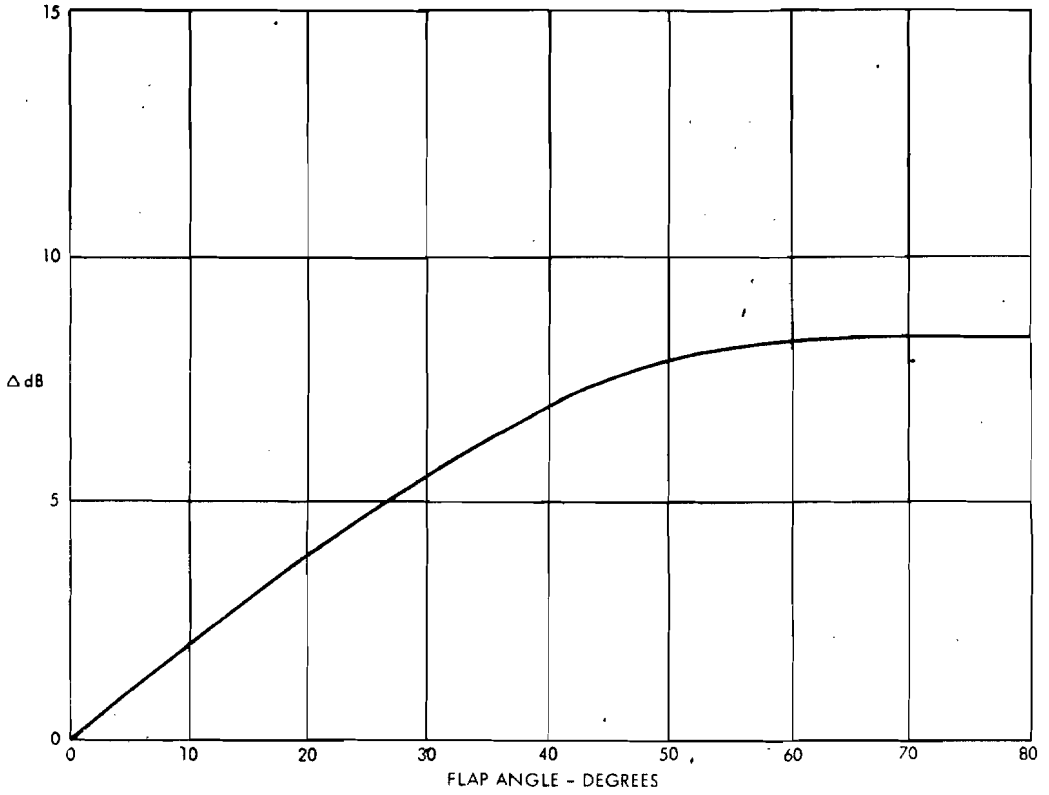


Figure 40 EBF/LSB Aircraft: Effect of Flap Angle Variation

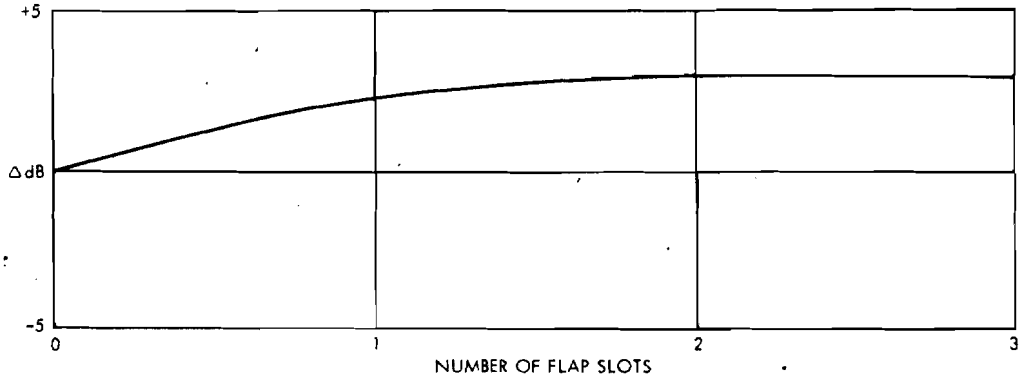


Figure 41 EBF/LSB Aircraft: Effect of Flap Slot Configuration

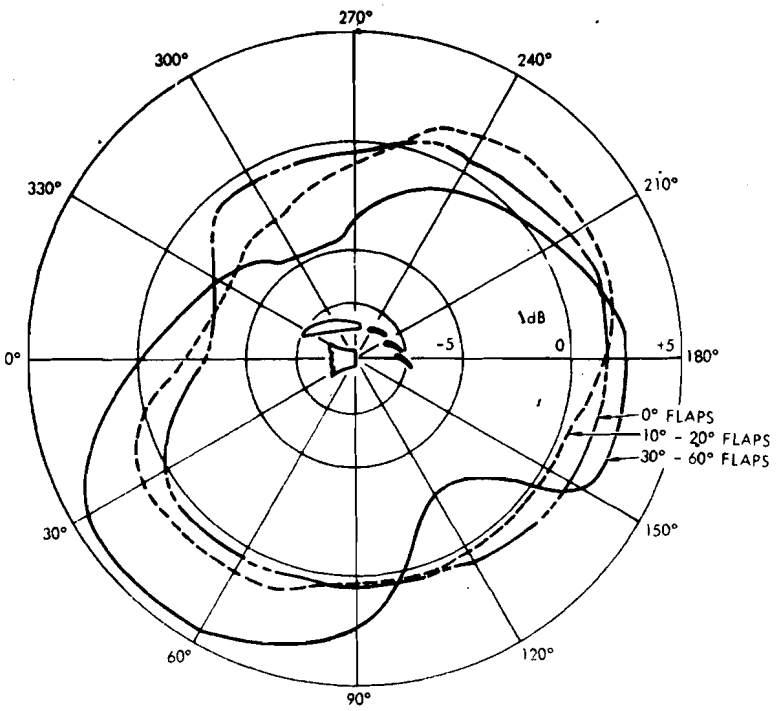


Figure 42 EBF/LSB Aircraft: Flyover Directivity

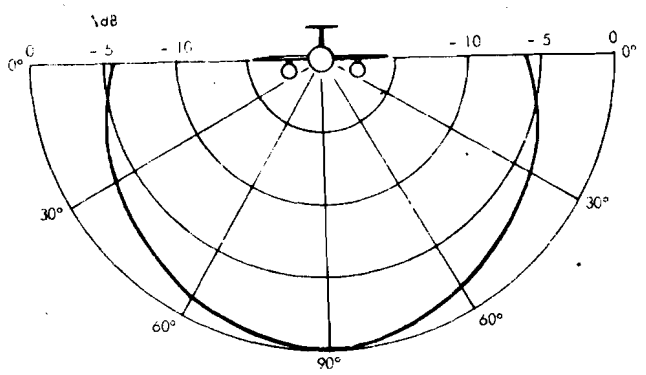


Figure 43 EBF/LSB Aircraft: 90 Degree Sideline Elevation Angle Directivity

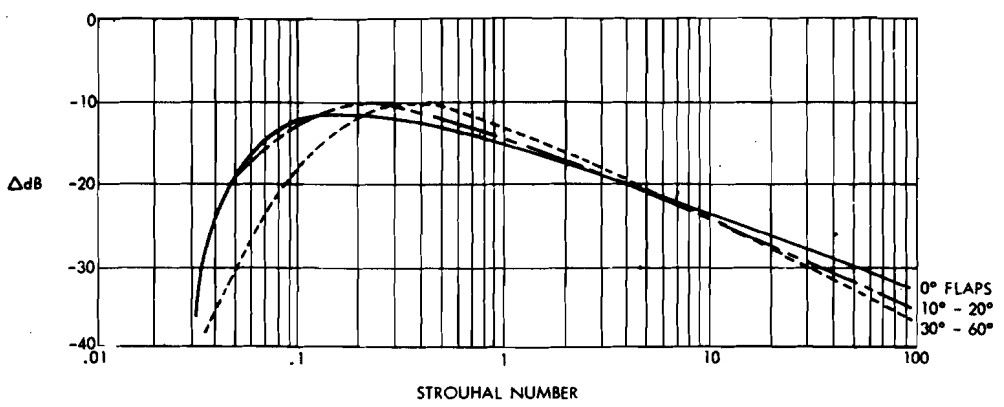


Figure 44 EBF/LSB Aircraft: PWL Spectrum Shape

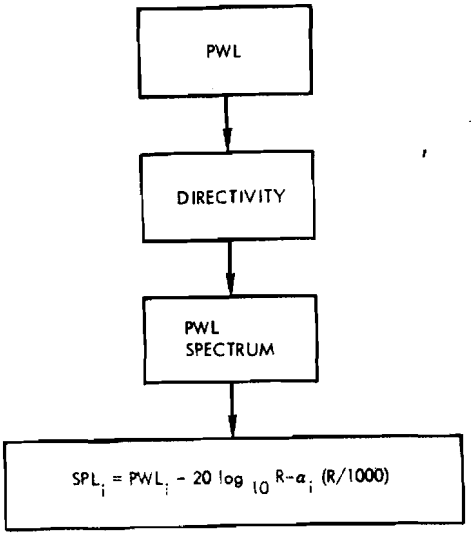


Figure 45 AIBF Aircraft Noise Prediction Flow Chart

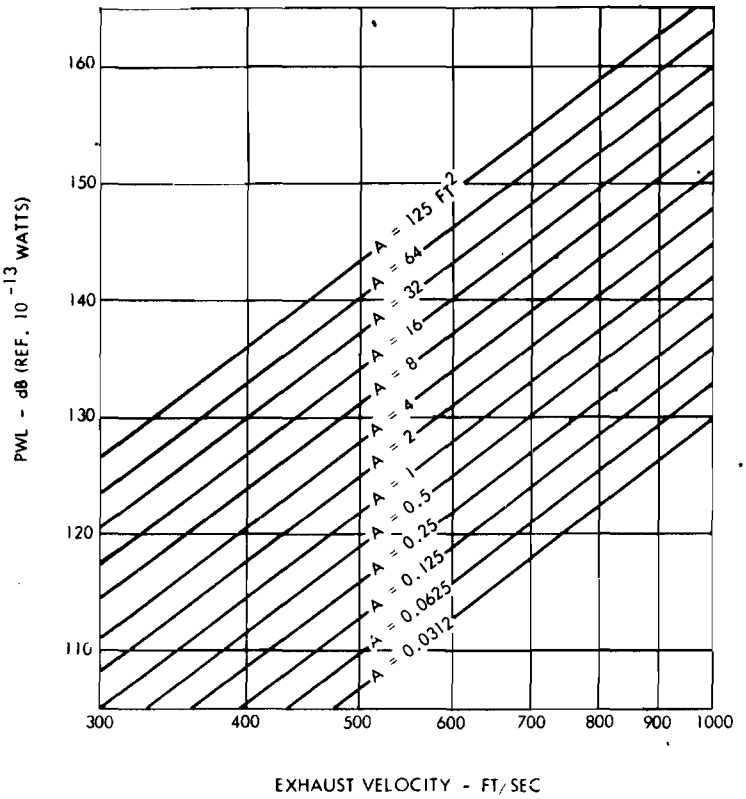


**Figure 46 AIBF Aircraft: Sound Power Level**

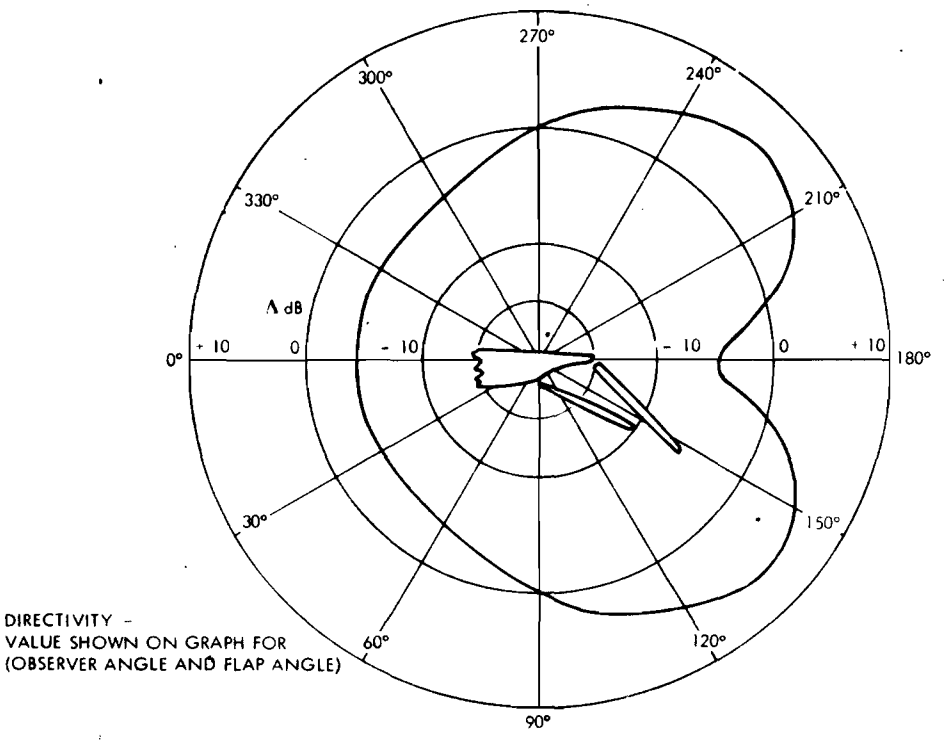


**Figure 47 AIBF Aircraft: Flyover Directivity**

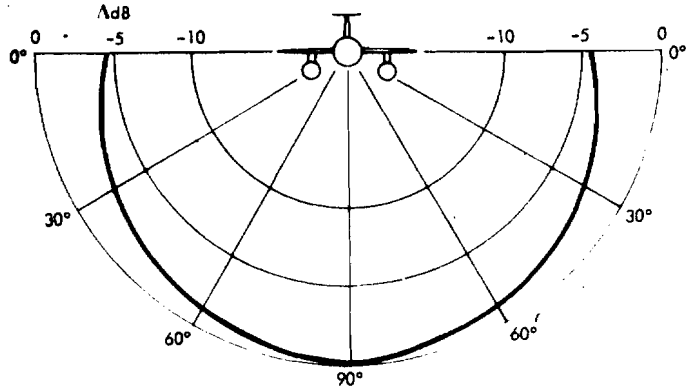


Figure 48 AIBF Aircraft: 90 Degree Sideline Elevation Angle Directivity

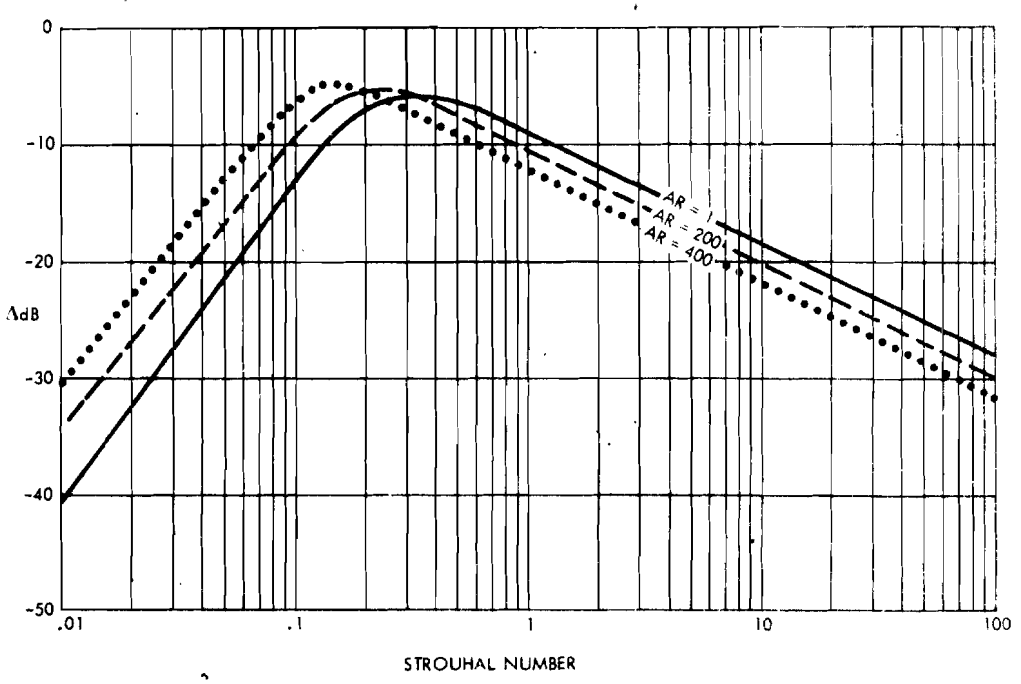


Figure 49 AIBF Aircraft: PWL Spectrum Shape

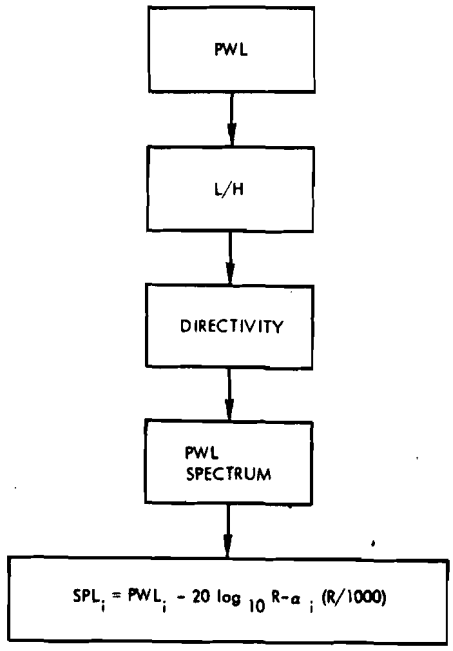


Figure 50 IBF/BLC Aircraft Noise Prediction Flow Chart

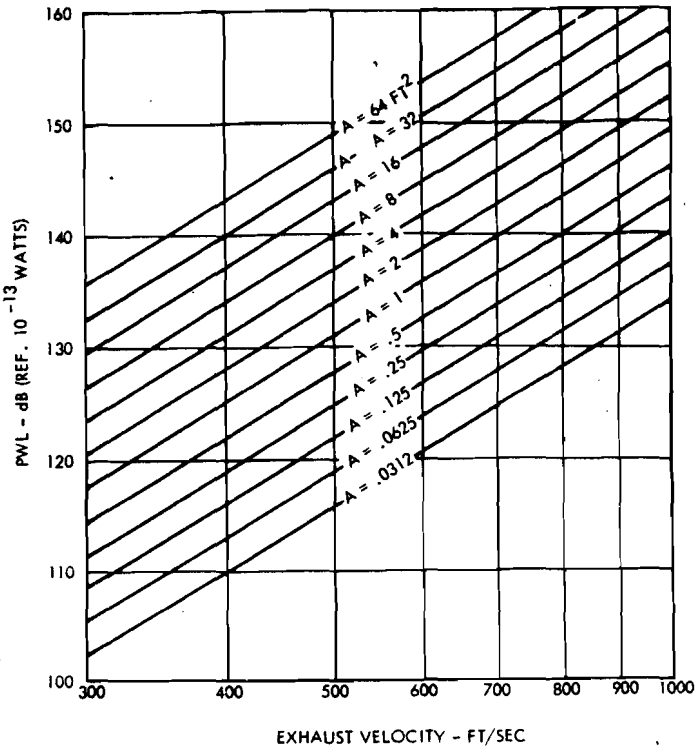


Figure 51 IBF/BLC Aircraft: Sound Power Level

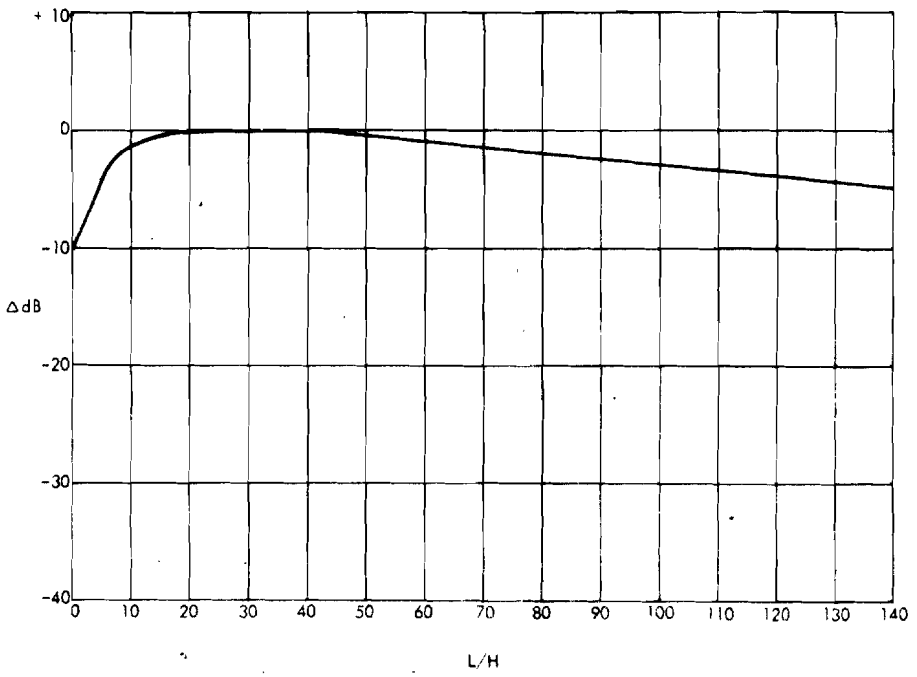


Figure 52 IBF/BLC Aircraft: Effect of L/H Variations

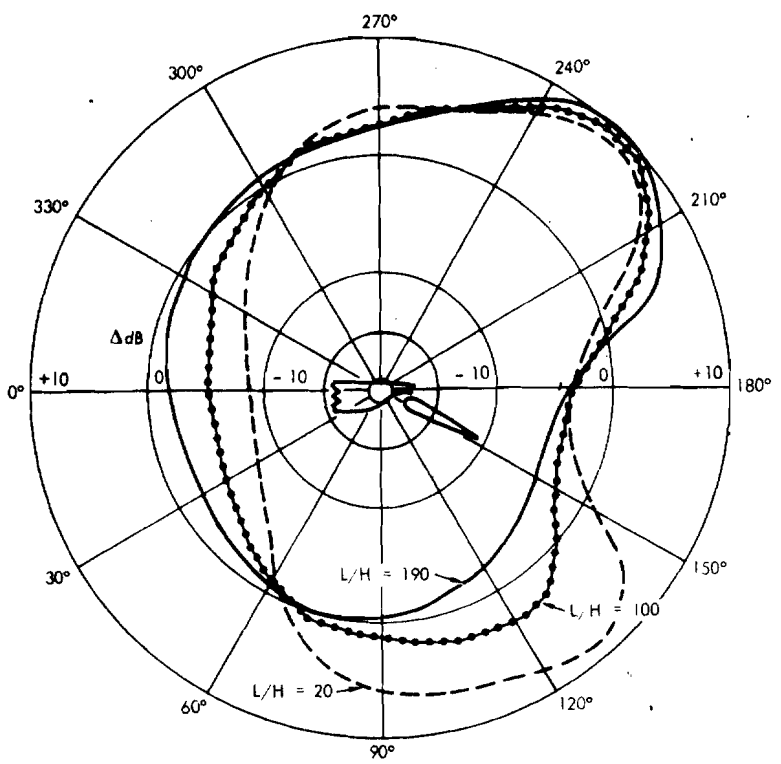


DIRECTIVITY = VALUE SHOWN ON GRAPH FOR
(OBSERVER ANGLE + NOZZLE ANGLE)

Figure 53 IBF/BLC Aircraft: Flyover Directivity

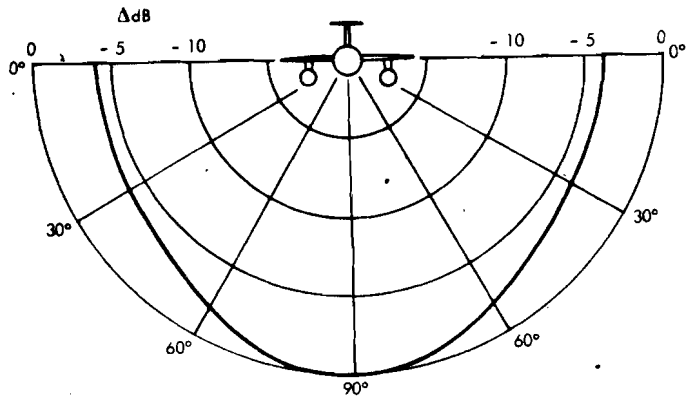


Figure 54 . IBF/BLC Aircraft: 90 Degree Sideline Elevation Angle Directivity

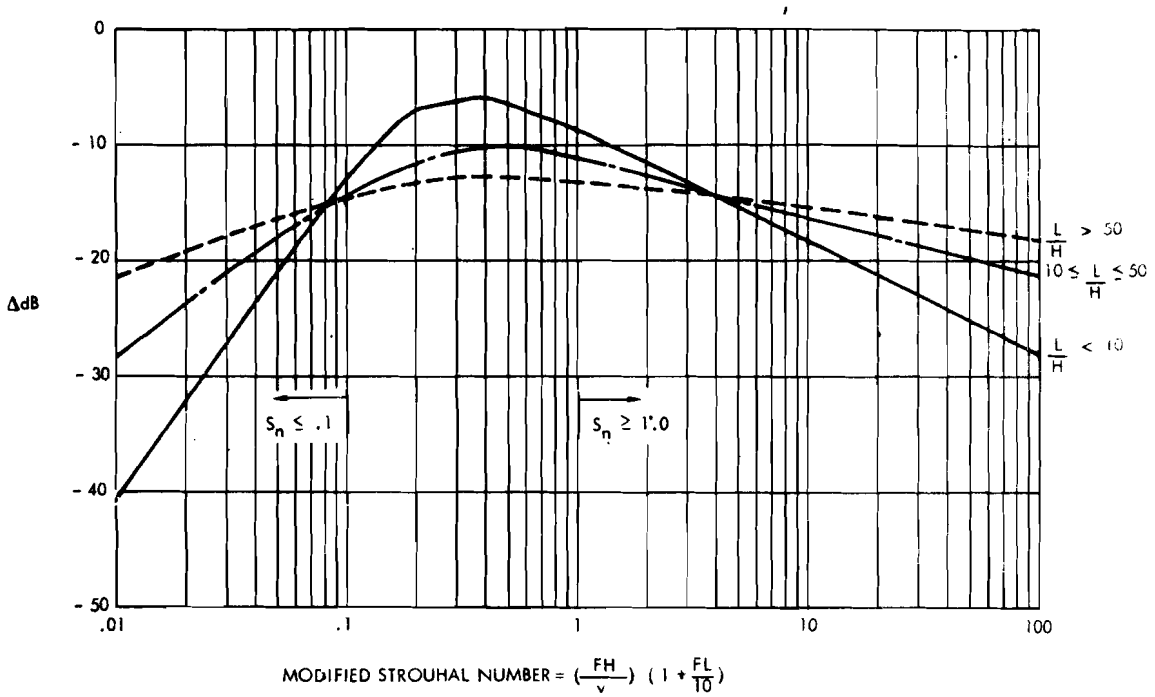


Figure 55 . IBF/BLC Aircraft: PWL Spectrum Shape

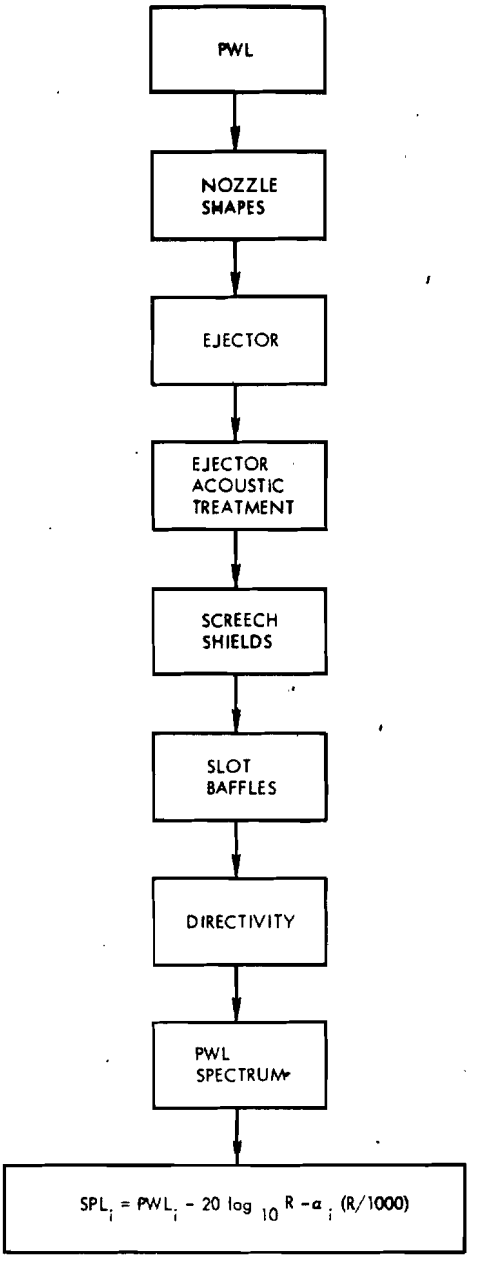


Figure 56 AW Aircraft Noise Prediction Flow Chart

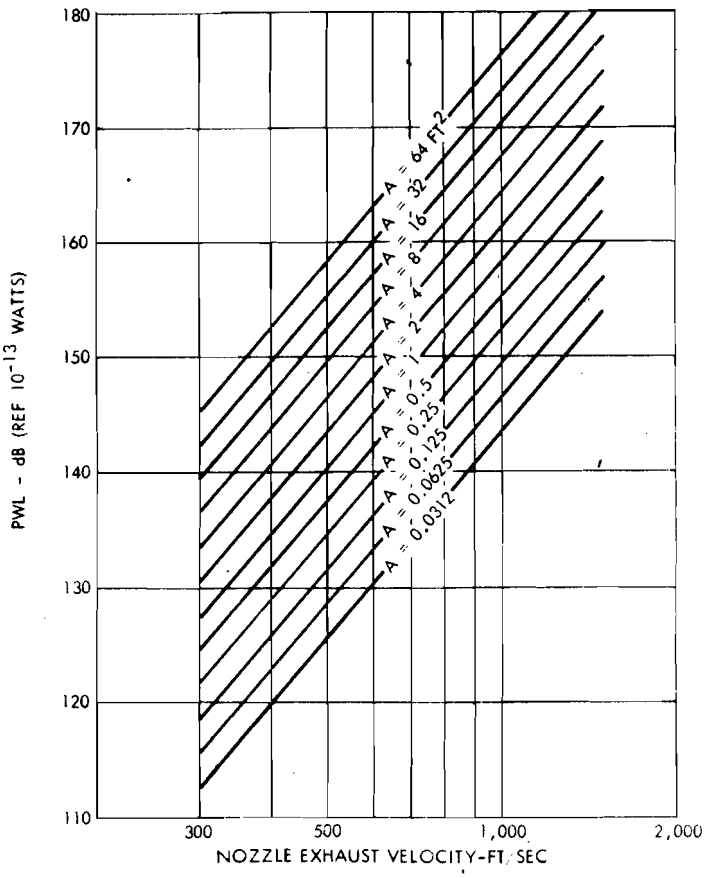


Figure 57 AW Aircraft: Sound Power Level

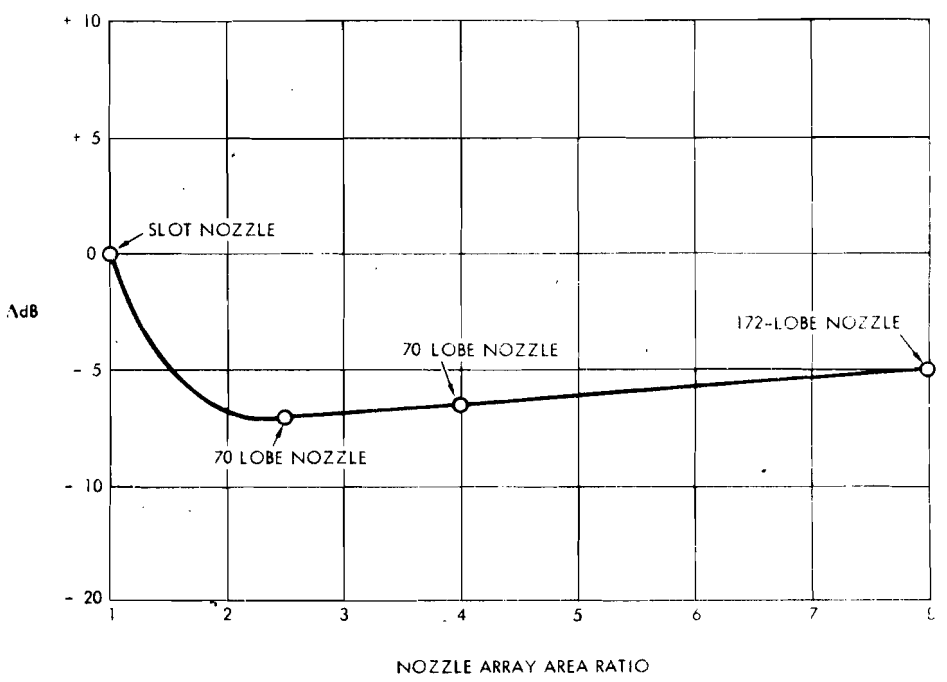


Figure 58 AW Aircraft: Effect of Nozzle Shape Variations

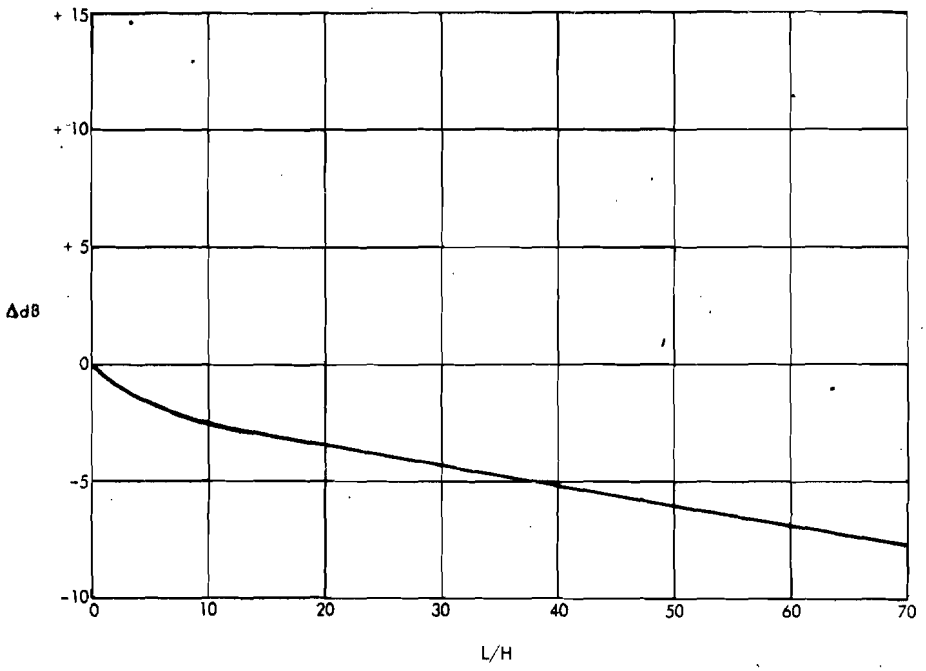


Figure 59 AW Aircraft: Effect of Ejector Shape Variations

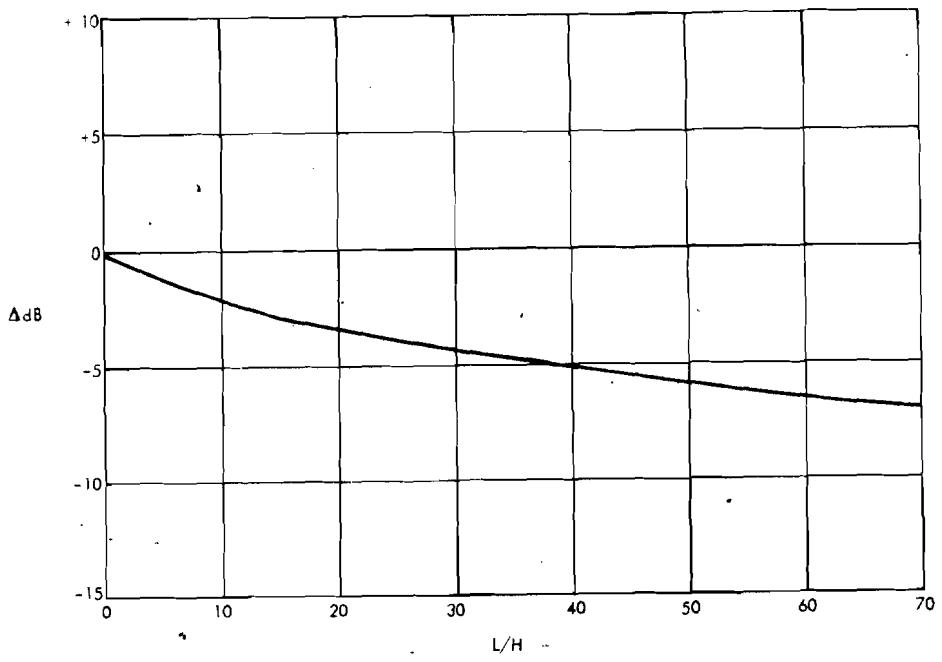


Figure 60 AW Aircraft: Effect of Ejector Acoustic Treatment

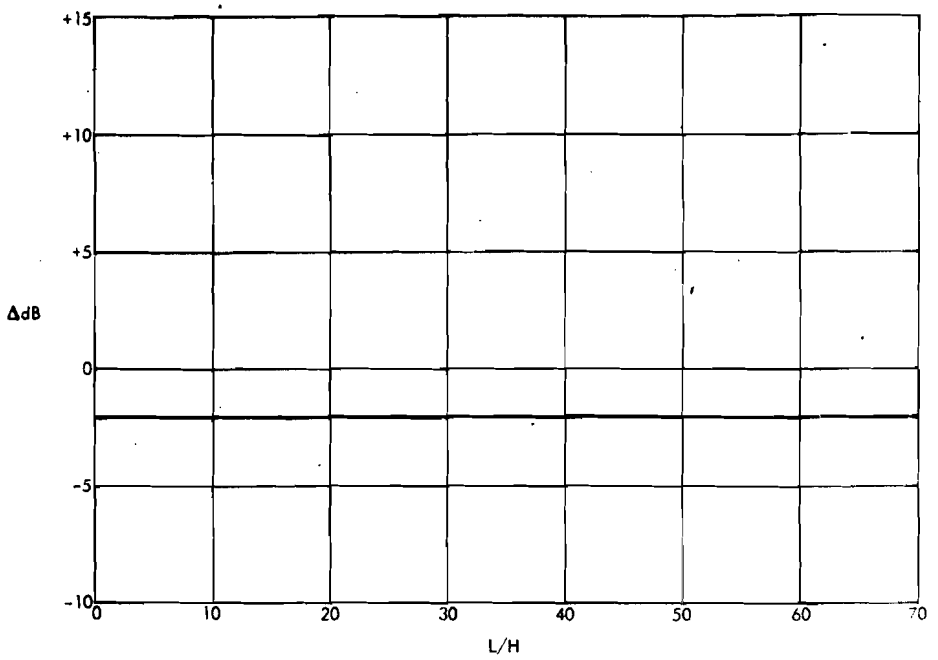


Figure 61 AW Aircraft: Effect of Screech Shields

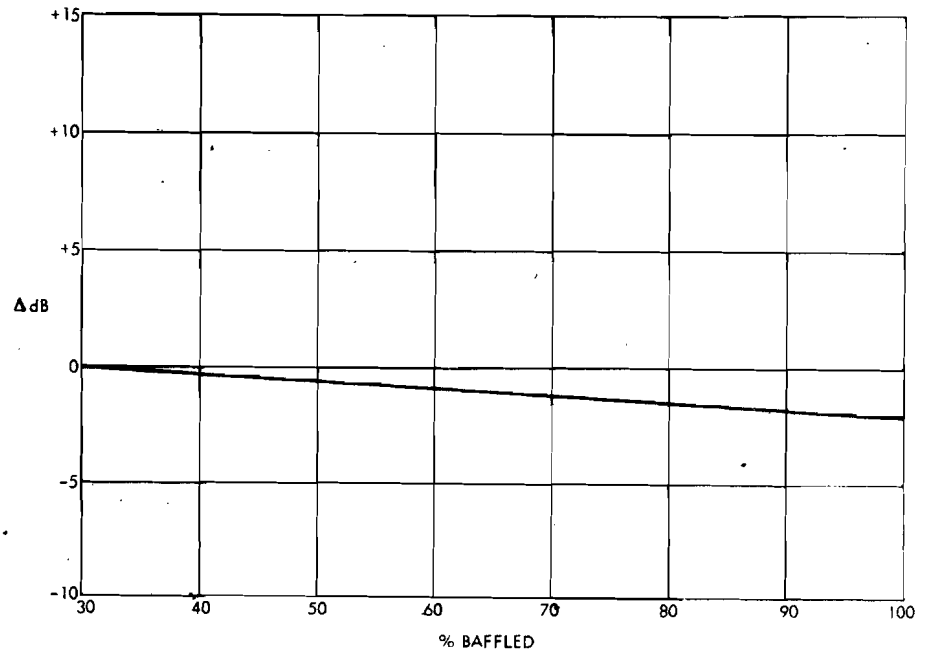


Figure 62 AW Aircraft: Effect of Slot Baffles

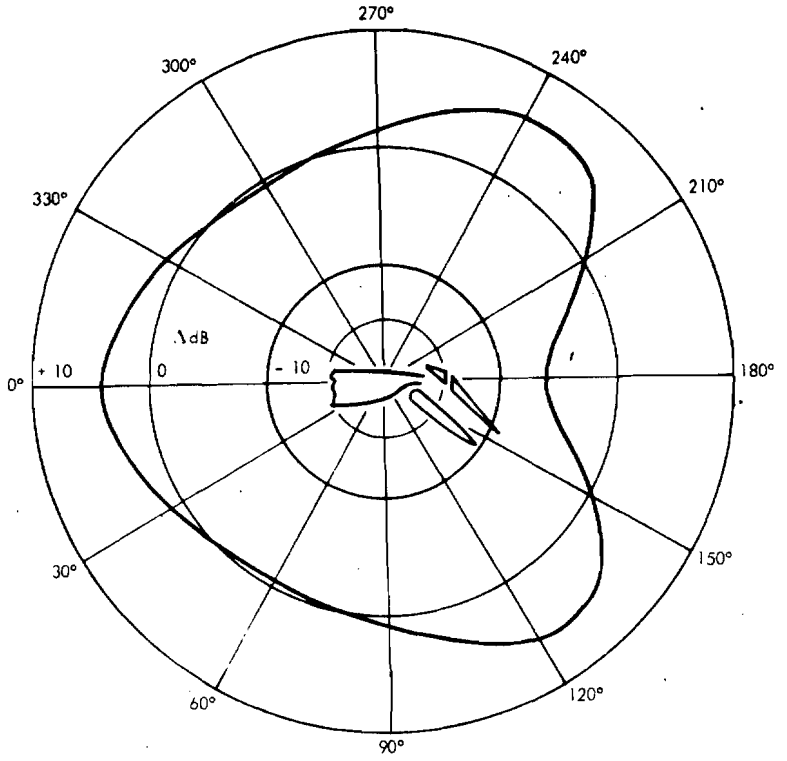


DIRECTIVITY = VALUE SHOWN ON GRAPH FOR
(OBSERVER ANGLE + FLAP ANGLE)

Figure 64 AW Aircraft: Flyover Directivity

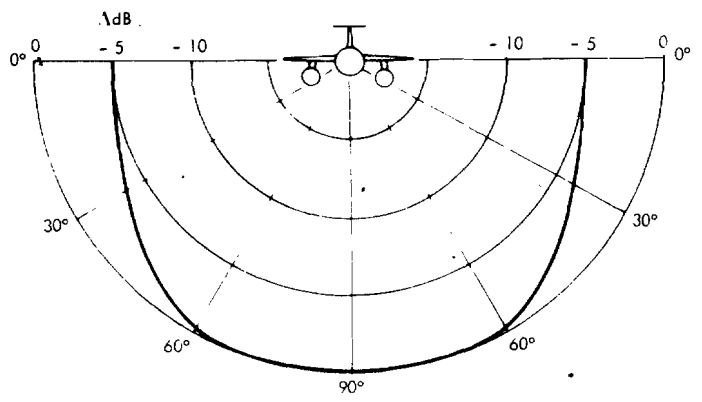


Figure 63 AW Aircraft: 90 Degree Sideline Elevation Angle Directivity

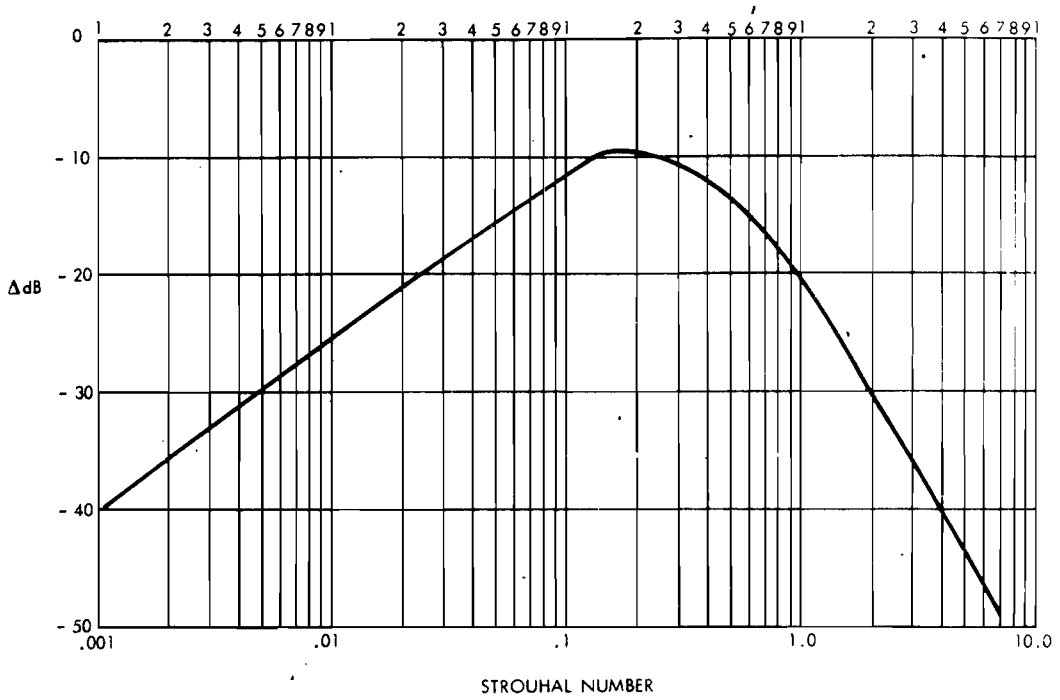


Figure 65 AW Aircraft: PWL Spectrum Shape

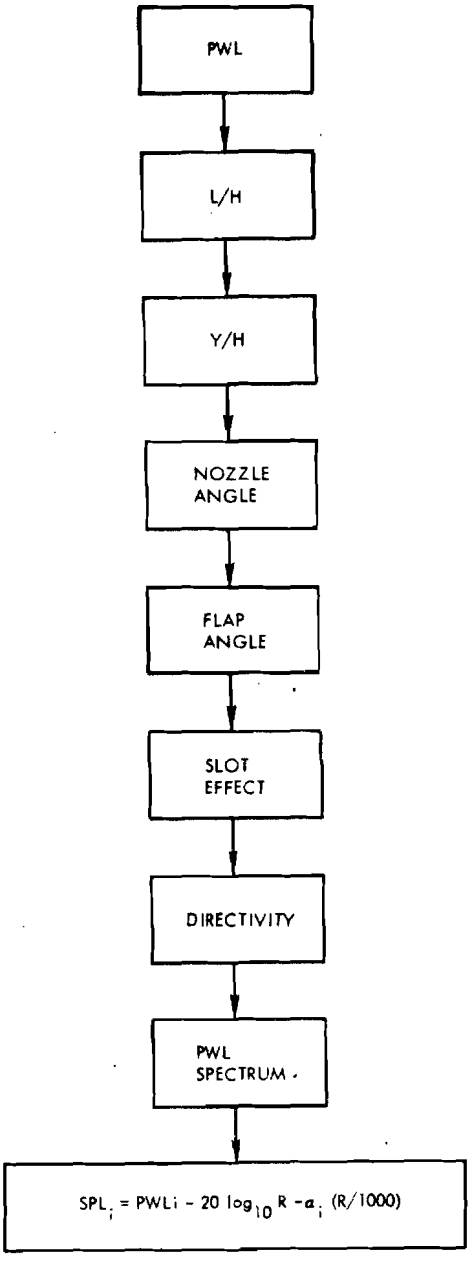


Figure 66 EBF/USB Aircraft Noise Prediction Flow Chart

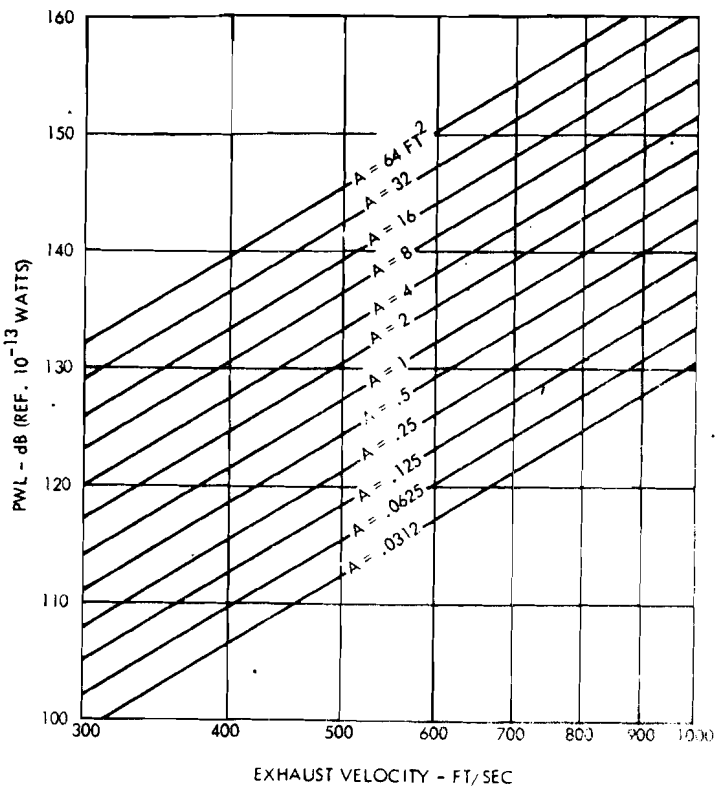


Figure 67 EBF/USB Aircraft: Sound Power Level

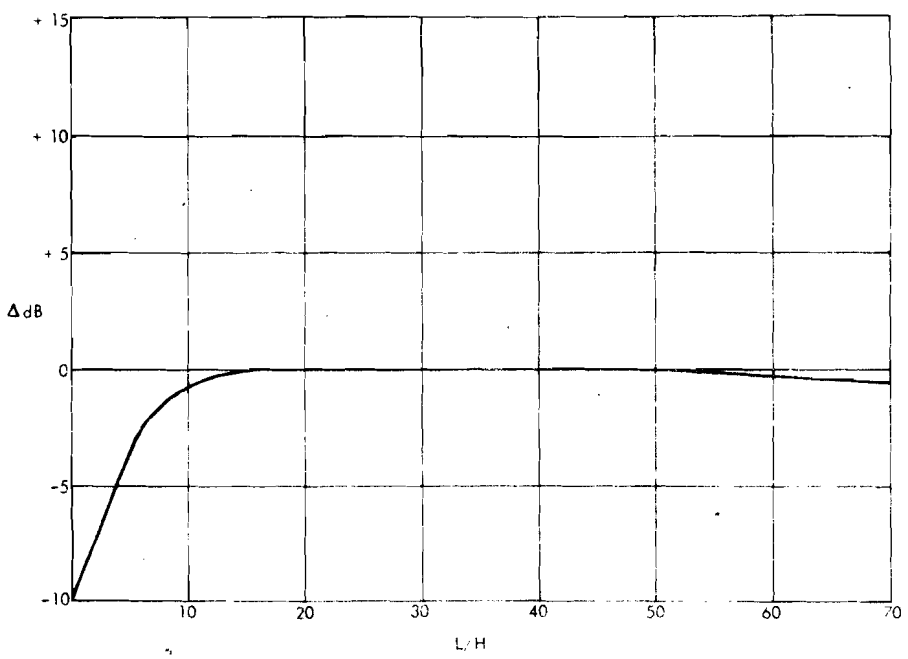


Figure 68 EBF/USB Aircraft: Effect of L/H Variations

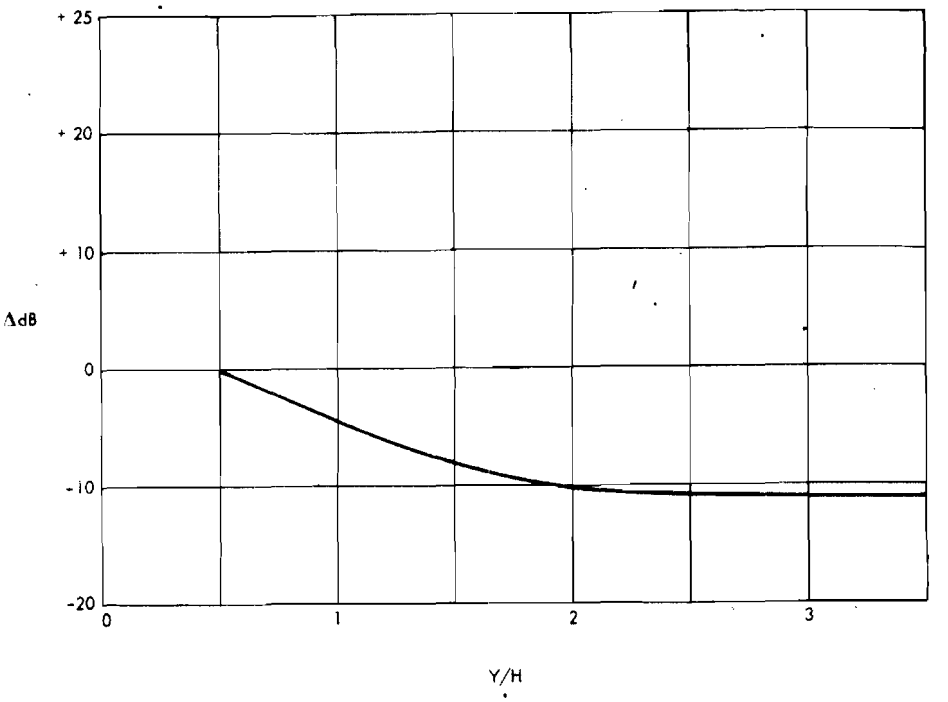


Figure 69 EBF/USB Aircraft: Effect of Y/H Variations

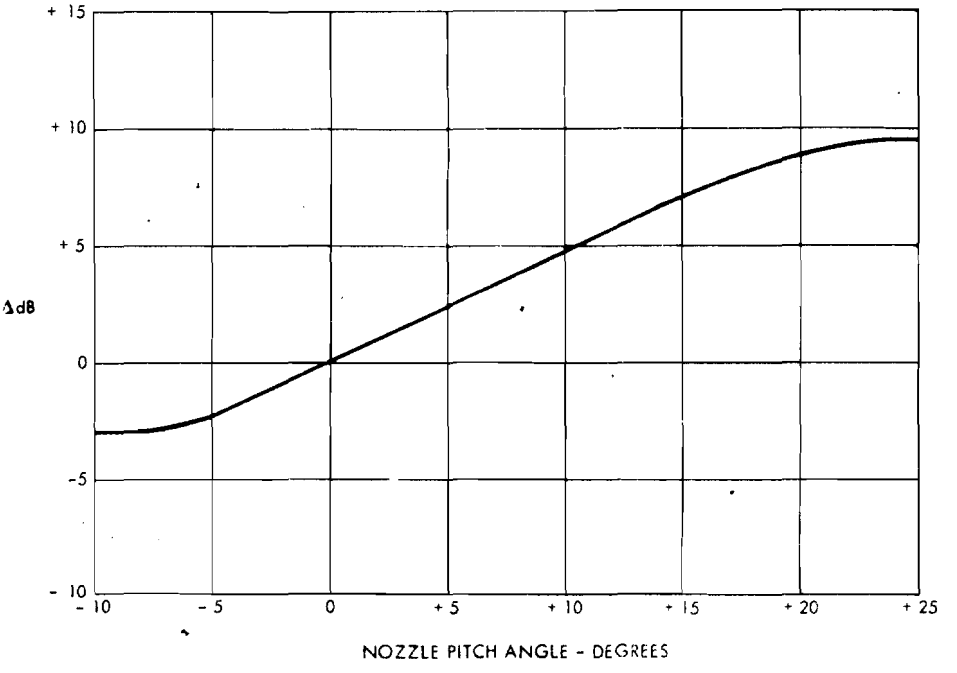


Figure 70 EBF/USB Aircraft: Effect of Nozzle Pitch Angle Variation

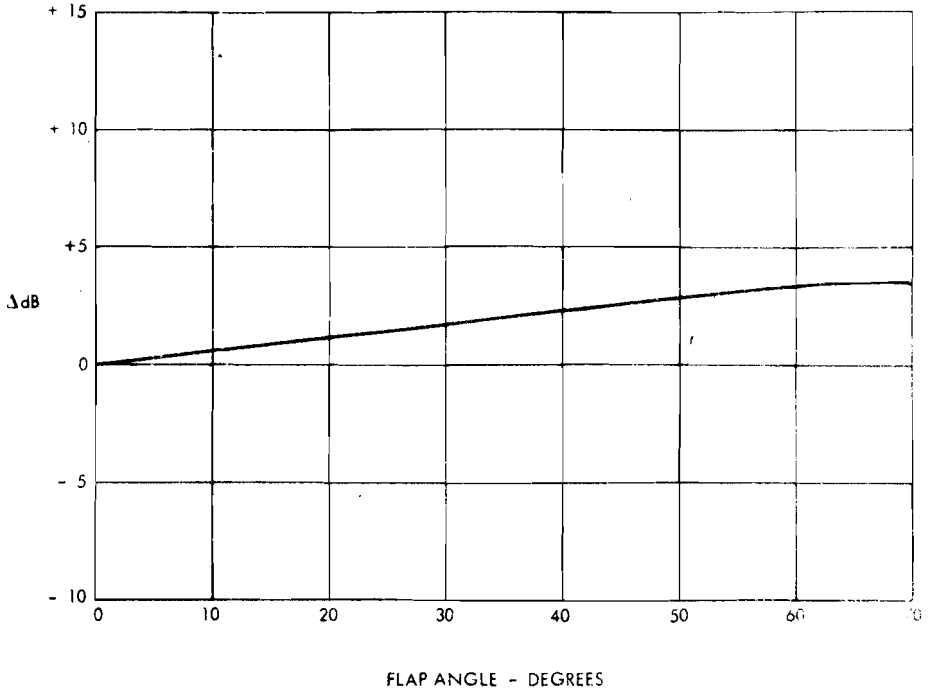


Figure 71 EBF/USB Aircraft: Effect of Flap Angle Variation

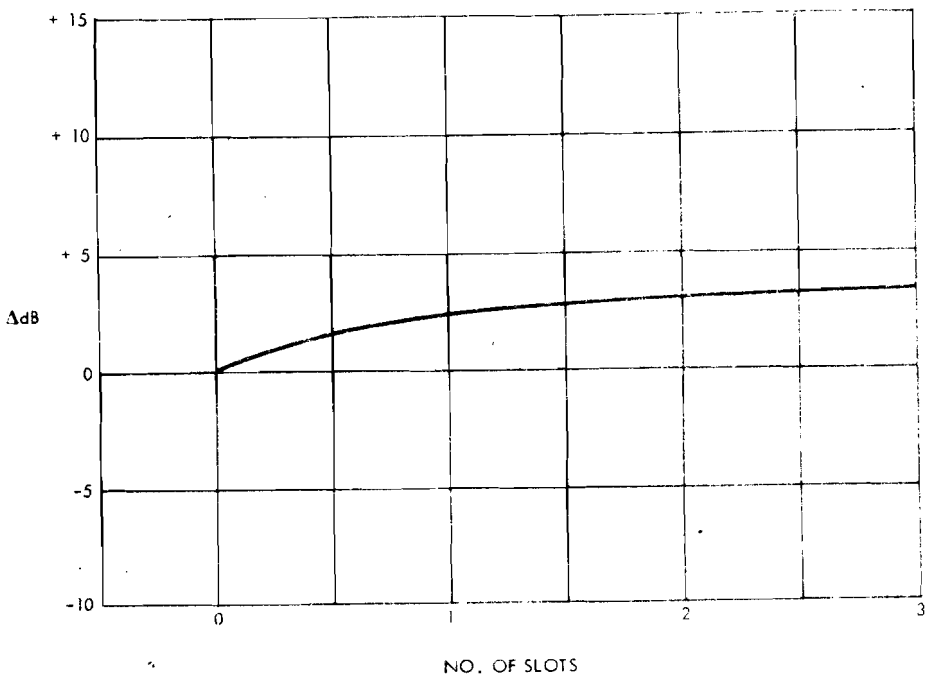


Figure 72 EBF/USB Aircraft: Effect of Slot Configuration

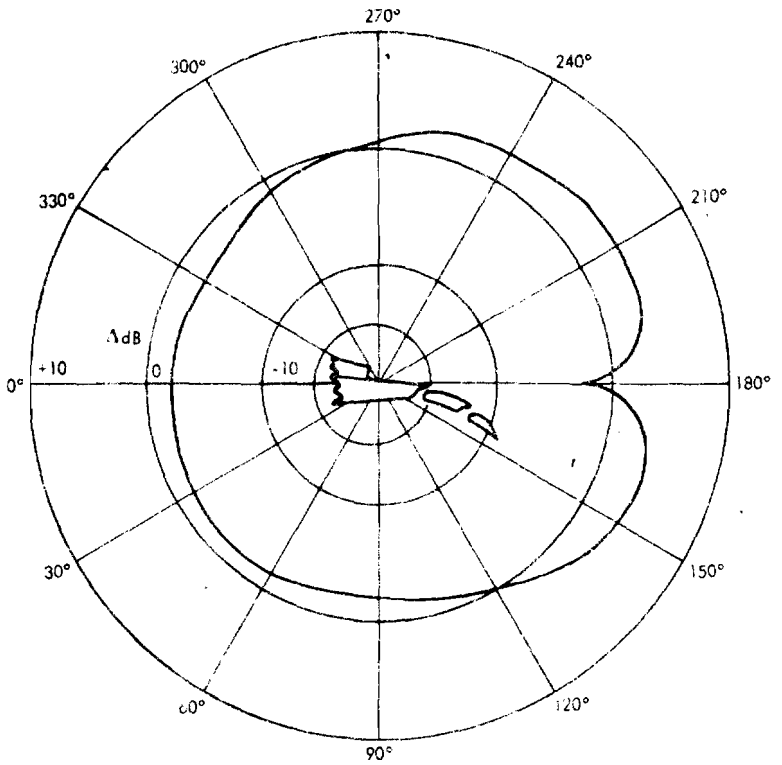


DIRECTIVITY = VALUE SHOWN ON GRAPH FOR
(OBSERVER ANGLE AND FLAP ANGLE)

Figure 73 EBF/USB Aircraft: Flyover Directivity

DIRECTIVE RELATIVE TO FLYOVER NOISE

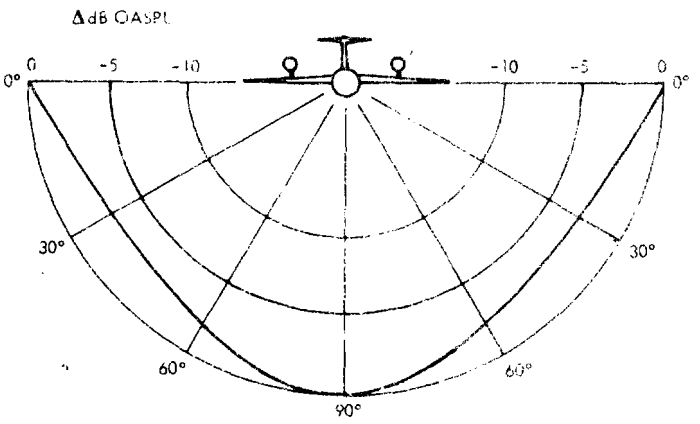


Figure 74 EBF/USB Aircraft: 90 Degree Sideline Elevation Angle Directivity

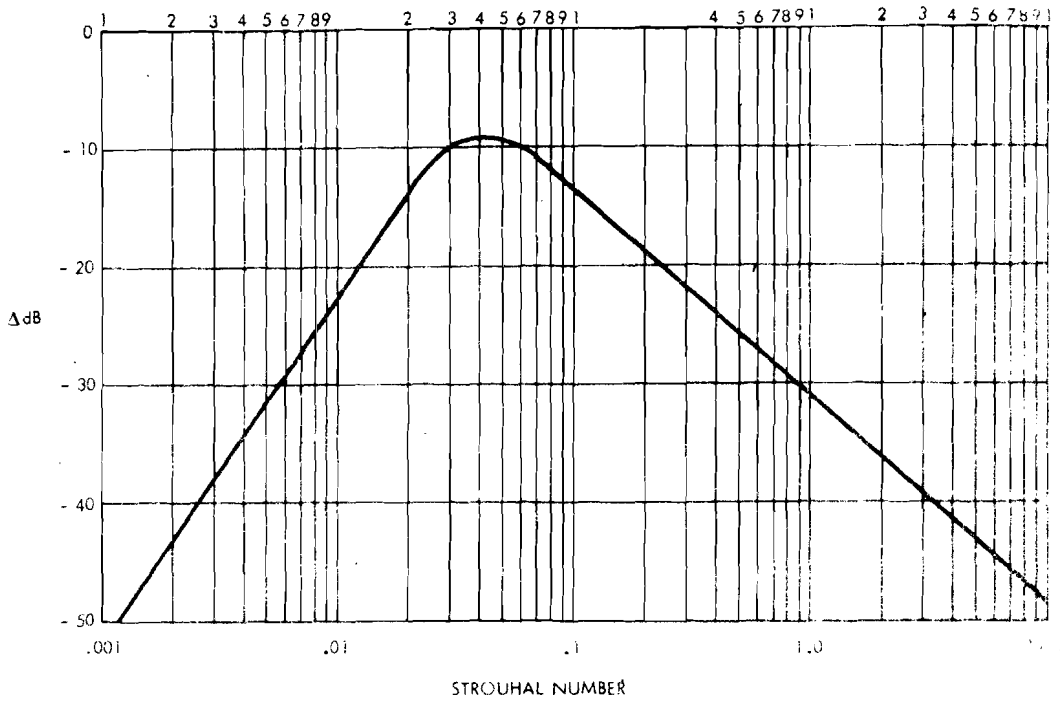


Figure 75 EBF/USB Aircraft: PWL Spectrum Shape

STOL NOISE REDUCTION MECHANISMS

Potential noise reduction by variation of the aircraft geometrical configuration and by variations in the engine cycle can be deduced from noise prediction model curves. In addition, other noise reduction devices that are known to exist can be divided into the following five categories.

- Engine duct treatment
- Nozzle configuration

- Flap structural configuration
- Flap blowing
- Forward speed effect

In order to abate noise generated internally within a turbofan engine, the fan inlet and bypass ducts as well as the turbine exhaust can be acoustically treated. In addition,a "choked flow" or sonic inlet concept may be used in the fan inlet.

Acoustic treatment in fan inlet ducts may be in the form of acoustic materials installed on the duct walls, radial splitters, ring splitters, and acoustically treated nose cones. The maximum practical attenuation from this type of noise reduction mechanism appears to be in the range of 15 to 20 dB. Studies conducted at Lockheed show that acoustic wall treatment installed in the engine inlet and fan ducts has a minimal effect on engine performance and weight when the treatment is an integrated part of the nacelle structure. Thrust penalties are estimated to be of the order of 15% when ring splitters sufficient for reducing the noise by 15 to 20 dB are installed in the engine ducts. The nacelle weight may be doubled by this type of acoustic treatment installation.

The choked flow inlet may be capable of achieving noise reductions of up to 30 dB. Significant noise abatement results from partially choking the inlets (Mach numbers from .7 to .9). Choking methods include translating center bodies, translating airfoils and turning of inlet guide vanes. These methods, while effective, are as yet unproven for practical installations, but offer the potential of high inlet noise reduction where needed.

Noise attenuation in the fan and turbine exhaust ducts can be achieved by installation of acoustic treatment on duct walls and/or insertion of treated splitters. While some form of these concepts of basic turbomachinery noise suppression will be inherent in all quiet V/STOL aircraft designs, further consideration is beyond the scope of this report. Therefore, it will be assumed that turbomachinery noise can be reduced to desired levels, leaving only the augmented high lift system noise to be dealt with. Therefore, the following discussion relates to high lift system noise reduction, and covers the remaining four noise reduction areas: nozzle configuration, flap structural configuration, flap blowing and forward speed effect.

NOZZLE CONFIGURATION

There are five major phenomena which effect the noise characteristics of a nozzle exhaust flow stream. These phenomena are:

- Nozzle pressure ratio
- Nozzle area
- Nozzle shape
- Physical properties of the exhaust fluid
- Environment of the jet flow field

The nozzle pressure ratio is determined by dividing the pressure just upstream of the nozzle throat by the static pressure in the exhaust stream (for a convergent nozzle, static pressure in the exhaust stream is equal to the atmospheric pressure).

Nozzle area is the area of the nozzle exit plane profile.

Major nozzle shapes which have been evaluated by numerous investigators are:

- Circular nozzles
- Slot nozzles

- Tube nozzles
- Lobe nozzles
- Nozzles with attached flow modifiers
- Coaxial nozzles

Physical properties of the exhaust fluid are temperature, density, and viscosity.

Environment of the jet flow field includes conditions of the surrounding fluid such as temperature, pressure, relative humidity and state-of-motion. State-of-motion includes velocity relative to the nozzle and turbulence levels. Other environmental factors include immersion of solid bodies in the flow field and surrounding structures, ground planes, etc.

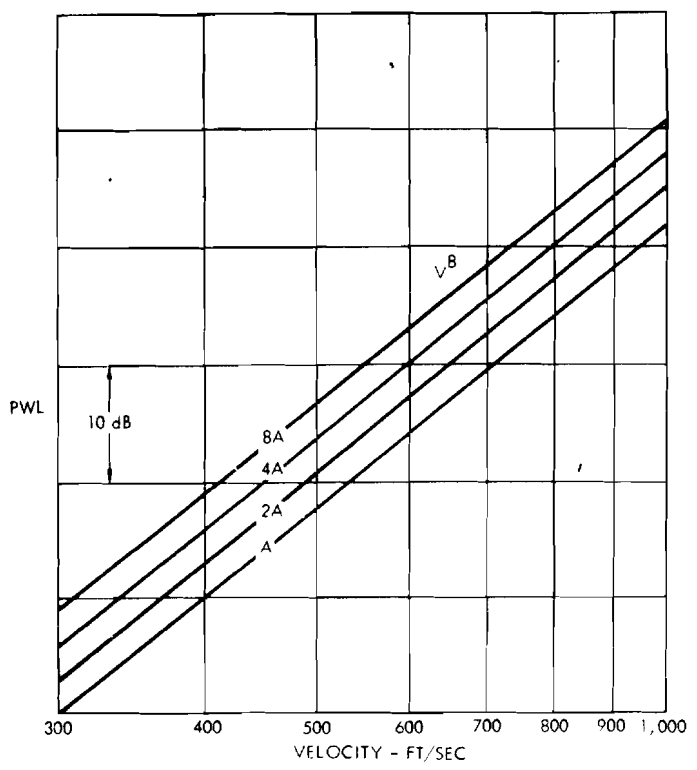


Figure 76 CIRCULAR NOZZLE SHAPE Effect of Flow Velocity Variation on Intensity

Circular Nozzle

In Figure 76, the sound power level produced by a circular nozzle jet is shown to increase as the eighth power of the velocity and as the first power of the area. Therefore, a large noise reduction is gained by reducing the jet velocity.

The extent to which velocity can be reduced for practical applications is limited by the allowable increase in size of the engine. The equation which follows is used for calculating the static thrust of a jet with subsonic flow velocity.

$$F_N = \left(\frac{\rho}{g}\right) AV^2 = \left(\frac{\pi \rho}{4g}\right) (DV)^2$$

If the density ($\rho$) is considered to remain constant, the equation shows that the product of the nozzle diameter (D) and the velocity (V) must remain constant if the thrust is to be unchanged. Thus, as velocity is decreased the diameter of the engine becomes larger.

It should be noted that jet noise associated with a circular nozzle is usually used as the standard for comparison of other nozzles with the same equivalent area and pressure ratio.

Slot Nozzle

Compared to a circular nozzle of the same area, the sound power level decreases slightly, the directivity shape peaks become more pronounced, and the frequency peak is shifted to higher frequencies as the aspect ratio

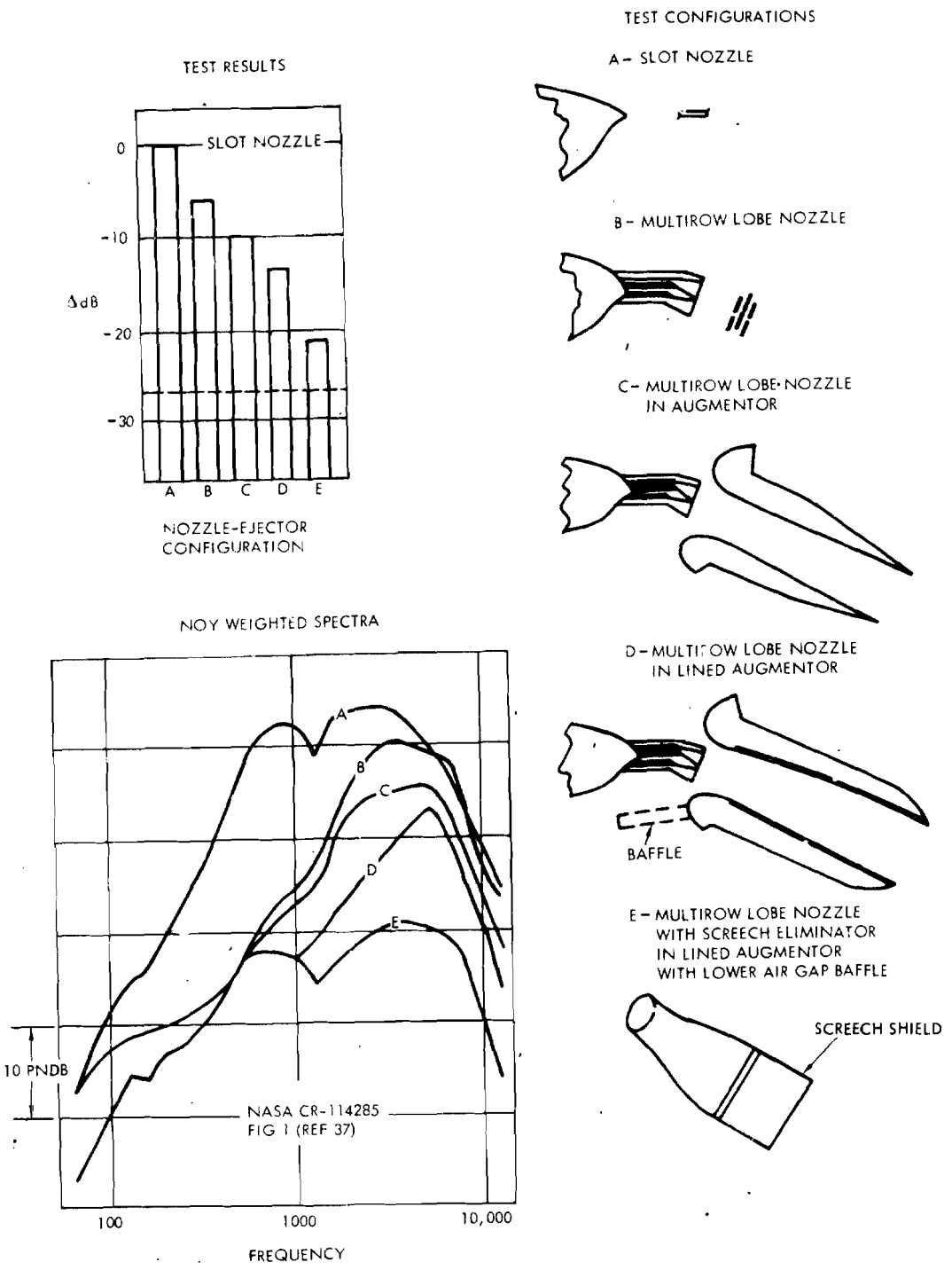


Figure 77 Methods for Reducing Slot Nozzle Noise.

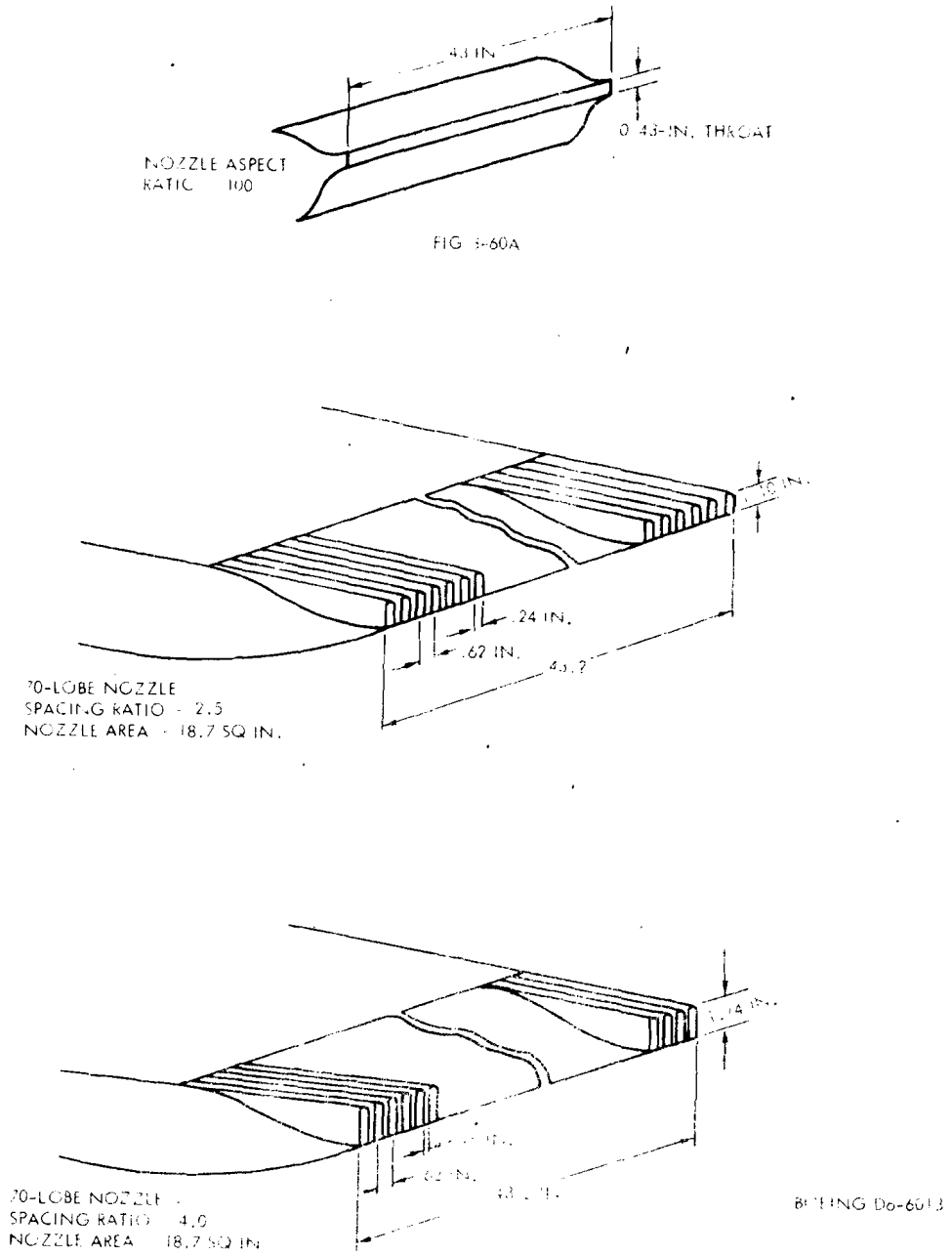


Figure 78 Boeing AW Test Model Nozzle Configurations (Sheet 1 of 2)

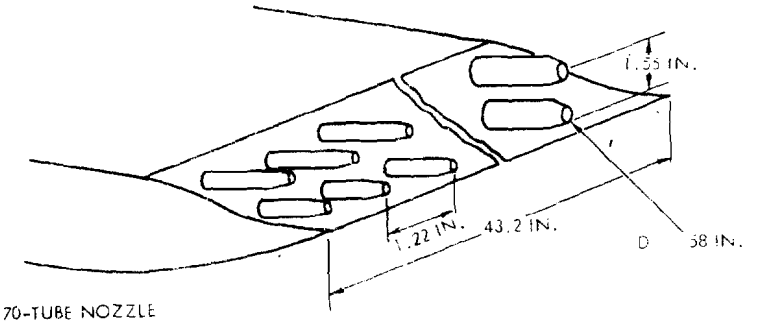


70-TUBE NOZZLE
AREA RATIO = 2.5
2 ROWS
NOZZLE AREA = 18.7 SQ IN.

REF: BOEING D6-60139

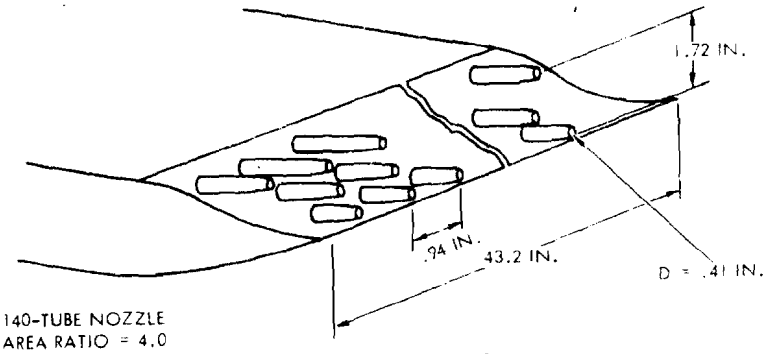


140-TUBE NOZZLE
AREA RATIO = 4.0
3 ROWS
NOZZLE AREA = 18.7 SQ IN.

Figure 78 Boeing AW Test Model Nozzle Configurations (Sheet 2 of 2)

of a slant nozzle becomes greater. In general very little noise reduction is gained by changing the nozzle shape from a circular configuration to a slot configuration. However, for the IBF/BLC, AW, and EBP/USB aircraft, the high frequency noise associated with a slot nozzle is considerably reduced below the aircraft as a result of flap shielding. The high frequency noise is also more readily attenuated by treatment installed on the flap surfaces and by atmospheric absorption.

An extensive discussion of slot nozzles is given in Reference 6. Intensity levels, directivity patterns and frequency spectra are presented for nozzles with aspect ratios of 50:1, 100:1, 200:1, and 400:1.

Lobe and Tube Nozzles

The effect on noise of converting a slot nozzle to a lobed nozzle configuration and acoustically treating the ejector is shown in Figure 77. In the upper left corner of the figure is shown progressive steps of noise reduction which result from addition of the contrivances shown by the sketches on the right side of the figure. A total reduction of up to 21 PNdB is possible with current technology. In the lower left corner, noy weighted spectra are shown.

Tubed nozzles and lobed nozzles (Figure 78) have approximately the same noise reduction potential.

Nozzles with Attached Flow Modifiers

Lobed nozzles with 24 and 30 lobes have been extensively tested at Lockheed. Results of these tests, tests performed at Edwards Flight

Research Center and tests performed at NASA Lewis Research Center show that lobed type mixer nozzles are not effective noise reducers when used by themselves at low jet velocities. However, when they are used in conjunction with an acoustically treated ejector, noise can be reduced by 4 to 8 dB in EBF experiments (see Figure 79). Thrust levels for a lobed nozzle with ejector are on the order of 7% greater than for a simple circular nozzle where operation is for static conditions. As the flight mach number is increased to approximately .3 the thrust for the lobed-ejector and circular nozzles approach the same levels and for higher mach number severe performance penalties are realized for the lobed-ejector nozzle configuration.

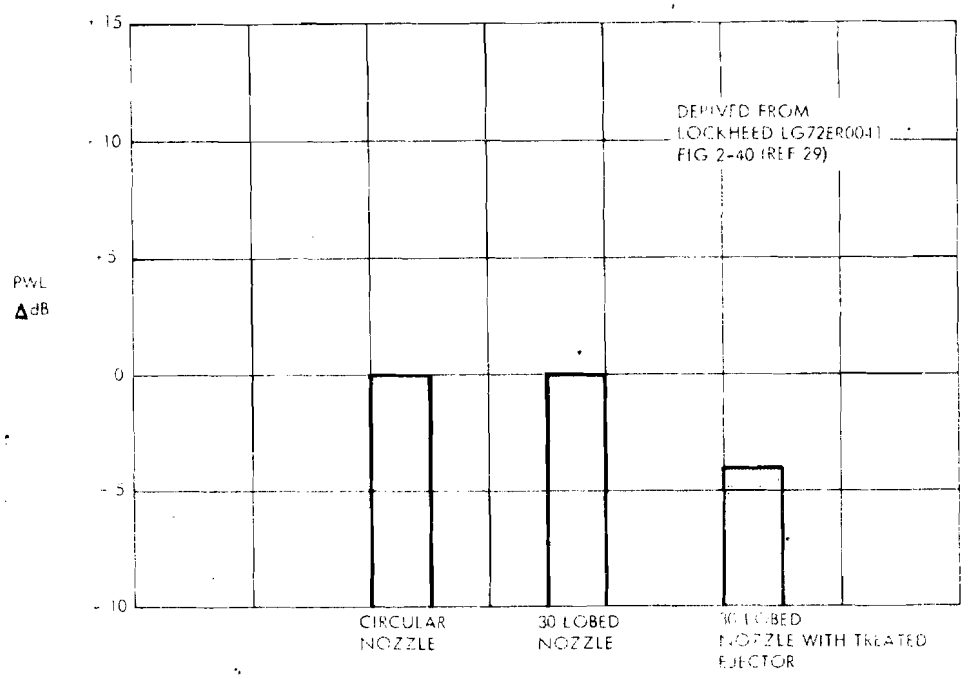


Figure 79 EBF/LSB Aircraft: Effect of Nozzle Shape on Intensity

Frequency spectra for lobed-ejector and circular nozzles are similar when the exhaust flow impinges on a wing-flap system.

For nozzles of the type shown in Figure 80 (The Quin-axial type flow modifier) noise suppression for this device reduces the noise by approximately 10dB. This reduction is associated with the "nozzle alone" configuration. The noise attainable when this type of nozzle is used near solid surfaces has not been evaluated.

Coaxial Nozzles

Reference 7 presents a thorough discussion of coaxial nozzles. Ratio of secondary flow velocity to primary flow velocity, ratio of secondary nozzle area to primary nozzle area, and axial position of primary nozzle relative to secondary nozzle exit plane are discussed in detail.

The curves in Figure 81 show that as secondary flow is introduced with a low velocity ratio, noise levels decrease. Noise produced by the primary jet is still predominant, but the primary jet flow velocity relative to the secondary flow velocity is less than the primary flow velocity relative to the ambient air. Thus, noise is reduced. For higher velocity ratios, the secondary jet noise becomes the predominant noise source.

Figure 82 illustrates the effect of variations in area ratio (secondary nozzle area/primary nozzle area). As can be seen, changing the area ratio from 1 to 10 reduces the noise by approximately 10 dB.

Figure 83 illustrates an interesting phenomena with regard to position of the primary nozzle. The abscissa on the figure shows the axial distance

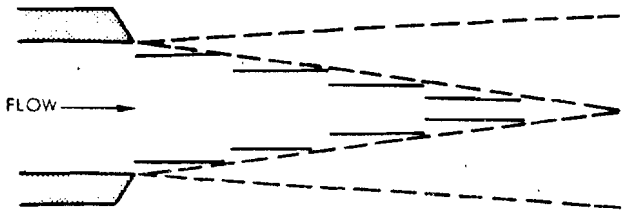


QUIN-AXIAL JET NOISE SUPPRESSOR

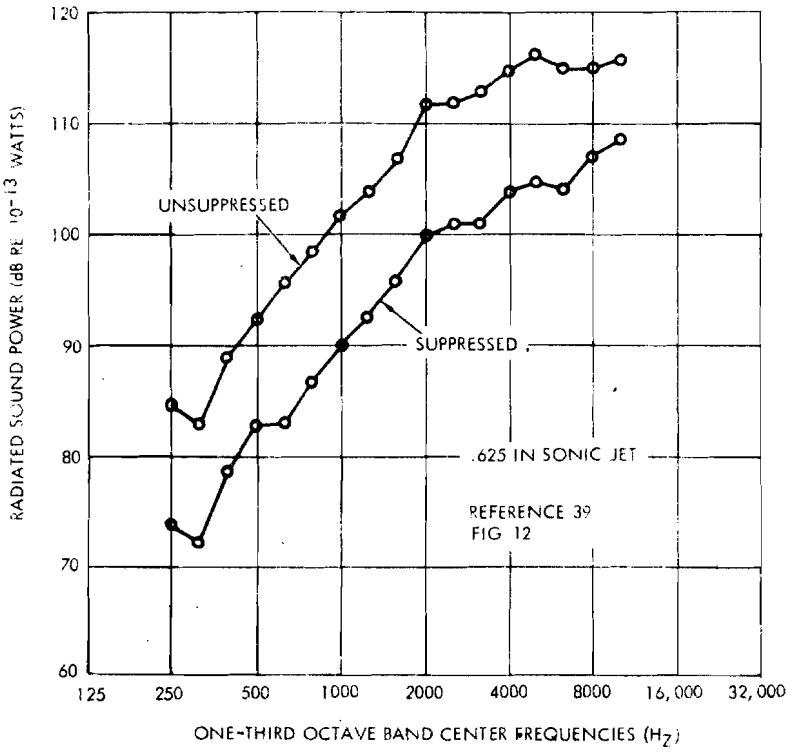


Figure 80 Nozzle With Attached Flow Modifier.

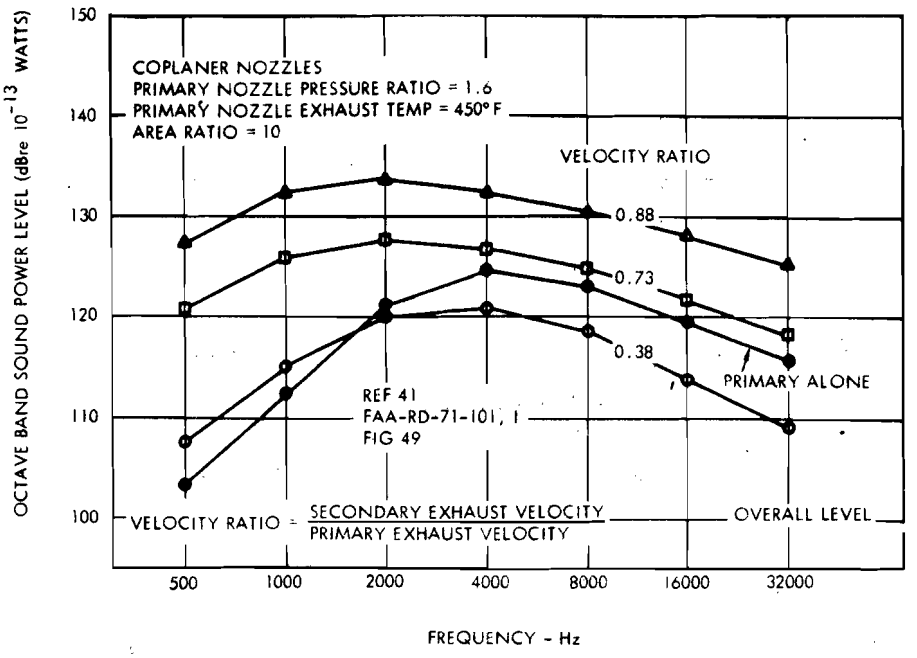


Figure 81 Effect of Velocity Ratio on Coaxial Nozzle Noise.

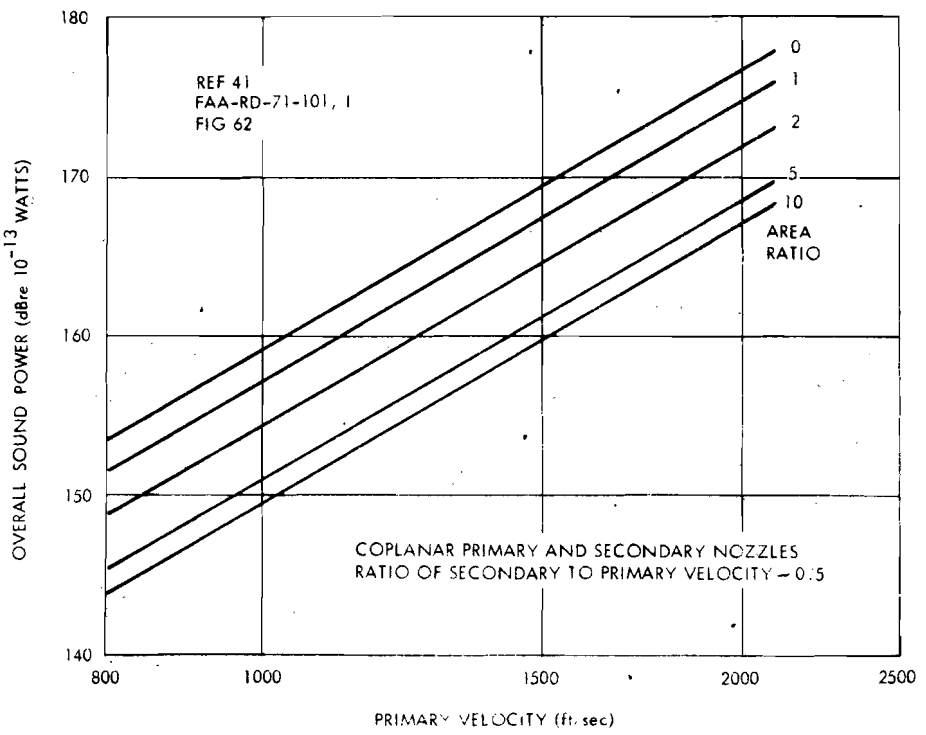


Figure 82 Variation of Sound Power of a Coaxial Nozzle as a Function of Area Ratio.

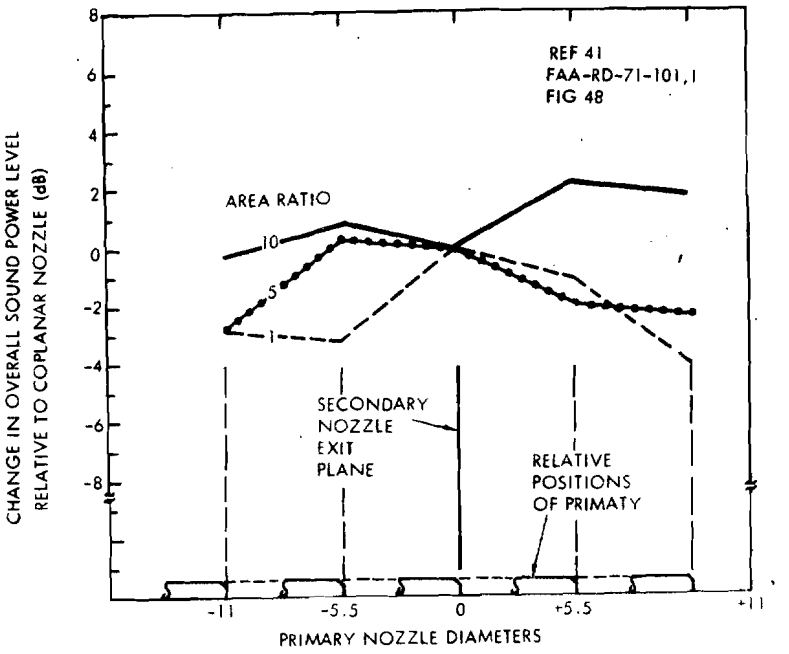


Figure 83 Effect of Axial Position of Primary Nozzle With Respect to Secondary Nozzle on Coaxial Nozzle Noise.

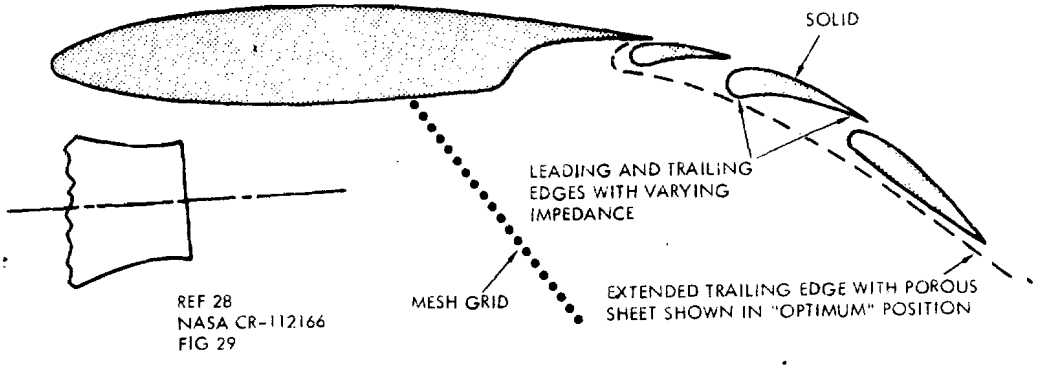


Figure 84 Schematic of Flap Structural Configurations.

between the primary nozzle exit plane and the secondary nozzle exit plane in terms of primary nozzle diameters. An interesting feature shown in the figure is the marked difference in sound power levels resulting from changes in the area ratio as the primary nozzle is transversed along the axis.

The coaxial nozzle parameters discussed above were made for the nozzle alone configuration. Tests have not been conducted to evaluate these parameters when the nozzle exhaust impinges on flap surfaces.

Flap Structural Configurations

Forms of flap structural configurations are:

- Acoustic treated surfaces
- Compliant surfaces
- Trailing edge serrations
- Trailing edge streamers
- Vortex generators
- Thick trailing edges
- Screens located in the air stream

Acoustic treated surfaces have been successfully used for an EBF/LSB aircraft configuration in which the leading and trailing edge of the flaps consist of acoustic materials. In conjunction with the treated surfaces, screens were introduced into the flow stream as shown in Figure 84. Attenuation values listed below are for 1/3 octave band peak frequencies.

| Configuration | Attenuation dB |
|---|---|
| Porous flaps | 6 - 8 |
| Porous flaps with felt metal sheet | 12 |
| Porous flaps with felt metal sheet and fine mesh screen | 20 - 22 |

Performance penalties for acoustic treatment of the flaps have not been sufficiently defined. Tests are in progress at Lockheed to evaluate noise reduction and associated performance penalties of an EBF/LSB aircraft configuration for various noise reduction mechanisms.

Vortex generators, streamers, and compliant surfaces have been previously investigated mainly in conjunction with helicopter rotor noise reduction. No data was found that was directly applicable to V/STOL aircraft, although work of this nature may be available in the near future.

Thickening and/or serrating of the trailing edge showed a repeatable 1 to 1.5 PNdB reduction in some unpublished Lockheed tests. The serration concept, if optimized, should provide somewhat better results.

Flap Blowing Concepts

Several programs are under way to evaluate blowing concepts as applied to USB and LSB aircraft. Reference 8 discusses test results for secondary air blowing on the upper surface of a flap. Conclusions given in the report are that for certain frequencies the noise is reduced approximately 5 dB by applying upper surface blowing near the flap trailing edge. The test configuration and noise spectra are presented in Figure 85. Noise

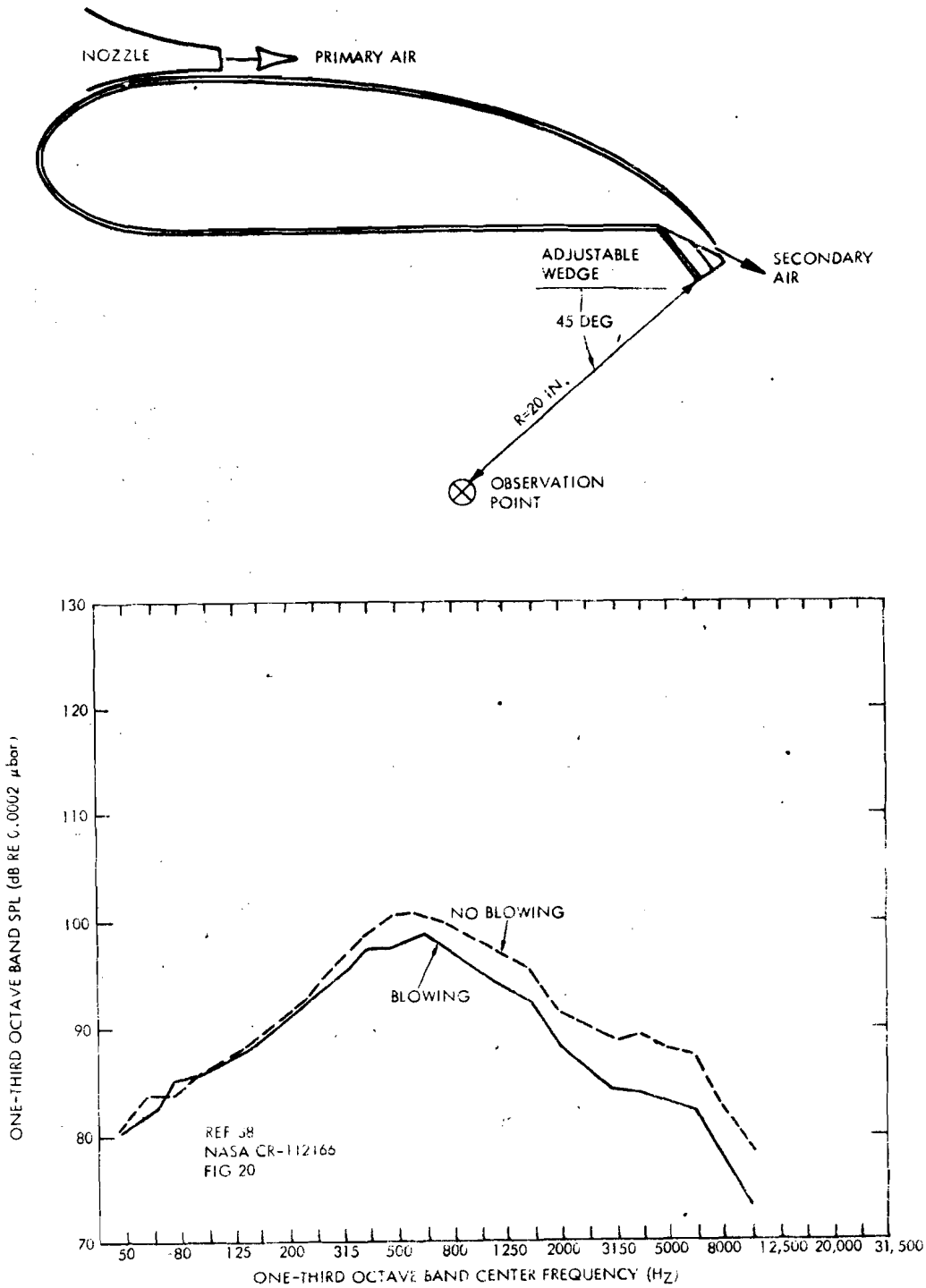


Figure 85 Effect of Flap Blowing on Trailing Edge Noise.

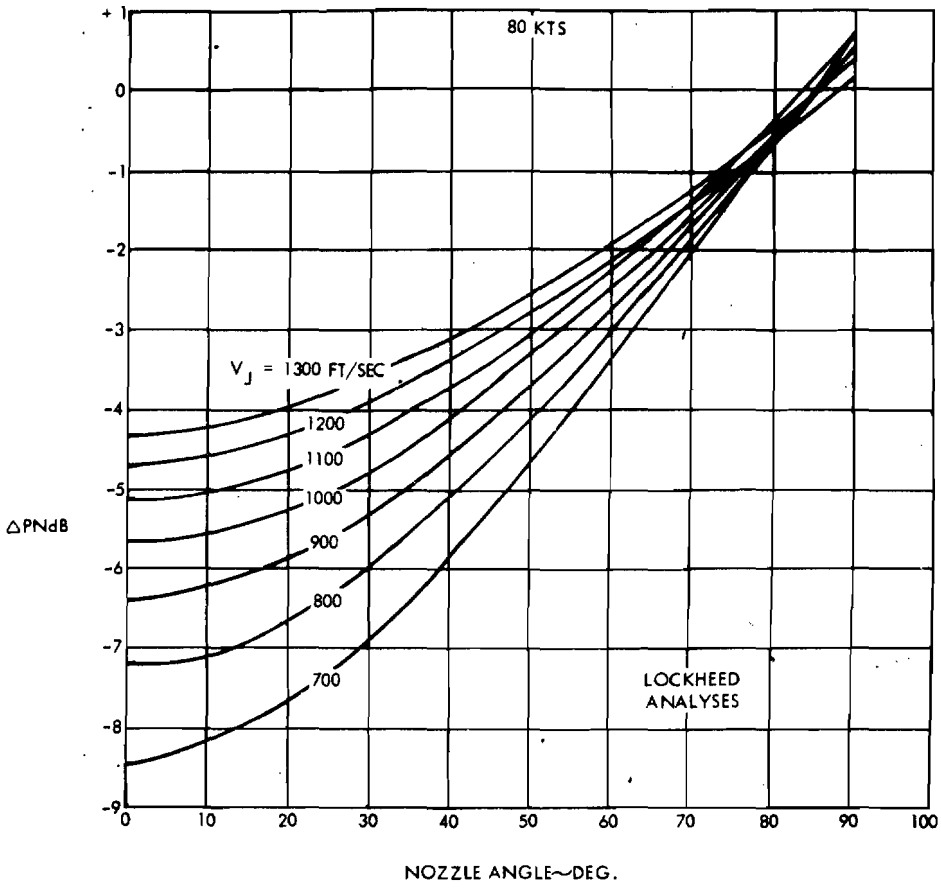


**Figure 86 Effect of Forward Aircraft Velocity on Jet Noise**

reduction and performance penalties are to be evaluated during the Lockheed test program referred to in the preceding section.

Effect of Aircraft Velocity on Noise

Turbomachinery noise is generally considered to be insensitive to aircraft forward speed. However, jet flow noise is significantly affected. Figure 86 gives a curve which shows the estimated noise reduction for a deflected jet flow mixing noise when the aircraft forward velocity is 80 knots. This family of curves may be applied to CTOL, VT, and AIBF aircraft. It should be noted that for engine exhaust velocities below 1000 ft/sec tail pipe velocities associated with fluctuating mass and fluctuating thrust phenomena at the nozzle exit plane become increasingly predominant. This noise is not a function of aircraft velocity and therefore in this exhaust velocity range the jet noise will not be reduced. The forward velocity effect for EBF/LSB, IBF/BLC, AW, and EBF/USB aircraft configuration is essentially unchanged. The jet flow over wing flap surfaces is usually the predominant noise associated with these augmented lift systems and is not significantly affected by aircraft velocity.

## REFERENCES


| Ref No. | | Title |
|---|---|---|
| 1 | J. F. Woodall | JT3D/JT8D Retrofit Feasibility<br>1974 SAE Meeting; Dallas, Texas<br>SAE No._____ April 1974 |
| 2 | J. O. Powers | Future Noise Requirements for Commercial Aircraft<br>AIAA Paper 73-1290 |
| 3 | R. J. Rulis | Status of Current Development Activity Related to STOL Propulsion Noise<br>NASA TMX-68195 |
| 4 | C.C. Ciepluck,<br>F.S. Montegani,<br>M.J. Benzakein,<br>S.B. Kozin | Quiet Engine Test Results<br>NASA SP 311, 1972, pp. 183-214 |
| 5 | W.A. Guinn, D.F. Blakney,<br>J.S. Gibson | V/STOL NOISE PREDICTION AND REDUCTION"<br>FAA-RD-73-145 - August 1973 |
| 6 | Coles, W.D.<br>Callaghan, E.E. | NACA Tech. Note 3974 (1957) |
| 7. | Crow, S.C.,<br>Champagne, F.H. | Orderly Structure in Jet Turbulence<br>J. Fluid Mech. 48 (1971) pp. 547-591 |
| 8. | Cook, A.M.<br>Aiken, T.N. | Low Speed Aerodynamic Characteristics of a Large Scale STOL Transport Model with an Augmented Jet Flap.<br>NASA TMX 62017 |