Report No. FAA-RD-74-9

SURVEY OF THIN FILM FLUORESCENT MATERIAL

Philip J. Federman

Arthur I. Siegel

December 1973

Final Report

Document is available to the public through the
National Technical Information Service,
Springfield, Virginia 22151

Prepared for

DEPARTMENT OF TRANSPORTATION
FEDERAL AVIATION ADMINISTRATION
Systems Research & Development Service
Washington, D.C. 20590

NOTICE

This document is disseminated under the sponsorship of the Department of Transportation in the interest of information exchange. The United States Government assumes no liability for its contents or use thereof.

Technical Report Documentation Page

1. Report No.	2. Government Accession No.	3. Recipient's Catalog No.
FAA-RD-74-9		

4. Title and Subtitle	5. Report Date
Survey of Thin Film Fluorescent Material	December 1973
	6. Performing Organization Code
	8. Performing Organization Report No.
7. Author(s) Federman, P. J., and Siegel, A. I.	
9. Performing Organization Name and Address Applied Psychological Services, Inc. Science Center 404 East Lancaster Avenue Wayne, Pennsylvania 19087	10. Work Unit No. (TRAIS) Program 05 Subprogram 051-241 11. Contract or Grant No. DOT-FA73WA-3320
12. Sponsoring Agency Name and Address Department of Transportation Federal Aviation Administration Systems Research and Development Service Washington, D. C. 20591	13. Type of Report and Period Covered Final Technical Report June - December, 1973 14. Sponsoring Agency Code ARD-232

15. Supplementary Notes

16. Abstract

The advantages and disadvantages of thin film adhesive fluorescent material for marking aircraft are discussed. Information relative to the experiences of users of this material is presented along with the most current opinions of manufacturers of the films, pigments, and adhesives from which thin film fluorescent material is constructed. Thin film fluorescent materials are compared with polyurethane paint and with fluorescent paint for marking aircraft from the points of view of added drag, added weight, and cost/utility. The analysis suggests support for the use of the thin film fluorescent materials on the basis of: possible conspicuity enhancement, minimum added weight, no differential drag effects, and a favorable cost/utility ratio. The principal disadvantage to the thin film fluorescent film appears to be its durability, although manufacturers report recent product improvements which serve to negate this objection to some extent.

√ A/c marking

17. Key Words	18. Distribution Statement
Aircraft Detectability Visibility Accidents Exterior Coloration Conspicuity	Document is available to the public through National Technical Information Service, Springfield, Virginia 22151.

19. Security Classif. (of this report)	20. Security Classif. (of this page)	21. No. of Pages	22. Price
Unclassified	Unclassified	70	

Form DOT F 1700.7 (8-72) Reproduction of completed page authorized

ACKNOWLEDGMENTS

We acknowledge the contributions which others have made to the formulation and completion of the work here reported.

Mr. John E. Reed, Program Manager for Visual Collision Prevention Systems, Systems Research and Development Service, Federal Aviation Administration (FAA), and Mr. Paul Rich, FAA National Aviation Facilities, Experimental Center, are acknowledged for their support and direction throughout.

Mr. Benjamin Van Artsdalen, Principal Maintenance Inspector at the General Aviation Administration Office, Philadelphia, located the aircraft in order that we could perform required measurements for development of marking schemes and identified the organizations that owned or hangared these aircraft.

Mr. William Miehle of Applied Psychological Services, Inc., calculated the weight of the various marking materials and examined the drag effects of the materials.

One or more persons at the following organizations participated in the interview phase or provided information/assistance:

American Airlines, Inc.
Boeing Company
Cessna Aircraft Company
Day-Glo Color Corporation
Eastern Airlines
Fasson
U. S. Army, Fort Rucker
Hercules, Inc.
Minnesota Mining and Manufacturing Company
Morgan Adhesives Company
Naval Air Development Center
Robbins AFB
U. S. Coast Guard
Wright-Patterson AFB

We express our thanks and acknowledge our indebtedness to all of these cooperating individuals for supporting our efforts.

Philip J. Federman
Arthur I. Siegel
APPLIED PSYCHOLOGICAL SERVICES, INC.

December 1973

TABLE OF CONTENTS

Page

ACKNOWLEDGMENTS i

CHAPTER I - INTRODUCTION 1

Nature of Midair Collisions 1
Concepts and Considerations 2
Reducing Midair Collisions 4
Visual Properties of Fluorescent Pigments 6
Research Findings on Fluorescent Visibility/Detectability 7
Fluorescent Paint vs. Fluorescent Film 13
Purpose of Present Program 16

CHAPTER II - EVALUATION OF PRESSURE SENSITIVE ADHESIVE BACKED FILM 19

Results: Manufacturer Interviews 21

Advantages of Film for Marking Aircraft 21
Disadvantages of Film for Marking Aircraft 22

Results: User Interviews 24

Advantages of Film for Marking Aircraft 24
Disadvantages of Film for Marking Aircraft 24
Marking Configurations 25

Added Weight 33

Drag Effects 34

Cost/Utility 36

Utility 36
Cost 39
Cost of Materials 43
Labor Estimates and Costs 43
Maintenance Costs Estimates 44
Cost/Utility 46

CHAPTER III - DISCUSSION AND CONCLUSIONS 51

REFERENCES 57

APPENDIX 61

LIST OF TABLES

Table		Page
1	Area of Coverage, in Square Feet, for Seven Aircraft and Three Marking Schemes	30
2	Dimensions of Areas of Coverage of Three Marking Schemes	31
3	Weight Per Unit Area of Five Brands of Pressure Sensitive Adhesive Backed Fluorescent Film	33
4	Weight of Marking Material (Pounds) for Three Marking Schemes on Seven Aircraft	35
5	Scale Value of the Importance of Marking Scheme Goals	37
6	Mean Value for the Extent to Which Three Marking Materials Meet Marking Scheme Goals	38
7	Cost Estimates for Marking Cessna 172 with Pressure Sensitive Adhesive Backed Film for Three Marking Schemes	40
8	Cost Estimates for Marking Cessna 172 with Fluorescent (and Polyurethane Paint) for Three Marking Schemes	41
9	Cost Estimates for Marking Cessna 172 with Polyurethane Paint for Three Marking Schemes	42
10	Cost Estimate Per Square Foot of Coverage Based on Estimates in Tables 7, 8, and 9	45
11	Cost of Marking Aircraft with Three Marking Schemes and Materials	47
12	Color/Utility Index for Marking Various Aircraft with Each Marking Scheme and Material	48

TABLE OF FIGURES

Figure		Page
1	Marking scheme I on the Cessna 172	26
2	Marking scheme II on the Boeing 737	27
3	Marking scheme III on the Beech Baron	28

CHAPTER I

INTRODUCTION

The continued occurrence of midair collisions has focused attention on the problem of maximizing aircraft detectability and visibility. Even with the development of electronic intruder warning devices, visual surveys of the sky by the pilot will still serve as a check on the information obtained from such devices, as well as a check on the appropriateness of any evasive action indicated or taken. A number of proposals for collision warning systems have been proposed and considered. Weight, complexity, effectiveness, and economic considerations have often led to the abandonment of recommended anti-collision devices. Although improved air traffic control communications, radar warning systems (over greater airspace), and anti-collision lighting systems may lead to a reduction in midair collisions, this report concerns itself with only one of the many recommended techniques for increasing aircraft detectability/visibility--exterior coloration.

Nature of Midair Collisions

Paradoxically, most midair collisions occur under visual flight conditions--when the pilots in the involved aircraft could have seen each other in time to avoid collision if the "see and be seen' concept was observed. Federal Aviation Regulations (Part 91) specify that vigilance be maintained by each pilot of an aircraft so as to see and avoid other aircraft when weather conditions permit, whether operating under IFR (Instrument Flight Rules) or VFR (Visual Flight Rules). Pilots have the responsibility of "continuously maintaining a vigilant lookout regardless of the type of aircraft being flown or whether operating on an IFR flight plan or VFR flight rules" (Federal Aviation Administration, 1970).

Among the causes for pilot failure to detect intruding, collision course aircraft are: (1) preoccupation (in which the pilot attends to other flight relevant tasks, (2) fatigue (retarding muscular action of the eyes), (3) glare (causing a loss of visual sensitivity), (4) visual deterioration (e.g., myopia--nearsightedness; hypoxia--resulting in a constriction of visual field), (5) fixation (gazing into atmosphere without vertical and horizontal scanning), (6) lack of sufficient contrast between an intruding aircraft and its background, and (7) poor illumination.

The results of a study performed by the Federal Aviation Administration (1969), in which 1, 128 near midair collisions that occurred in 1968 were analyzed, indicated that 60 per cent occurred around the 10 "highest" terminal areas (within 30 nautical miles of an airport with a control tower) and at altitudes below 10, 000 feet. Seventy per cent of the near midair collisions studied occurred within 10 nautical miles of an airport and below 3, 500 feet altitude. The study also showed that reported critical near misses (i. e., those in which collision avoidance was due to chance rather than pilot action) and actual midair collisions in 1968 (317 and 38, respectively) took place under minimum VFR conditions or better. Weather was not found to be a major contributor to midair collisions or critical near midair collisions.

Ninety-five per cent of the critical near misses and 100 per cent of the midair collisions occurred in daytime. The highest situational incidence involved aircraft climbing or descending while encountering another aircraft in level flight. This is analogous to the situation in which one aircraft cuts another out of a traffic pattern. In terminal areas, aircraft on an IFR approach encountering a VFR aircraft was found to be the second highest situational incidence. An analysis of the types of aircraft involved in the near midair collisions of the FAA study (1969) indicated that 52 per cent were single engine aircraft, 20 per cent were 2- and 3-engine transports, 14 per cent were military aircraft, 10 per cent were 4-engine transports, and 4 per cent were light twin engine aircraft.

Concepts and Considerations

Optimum visibility is dependent on several factors. Among these factors are brightness contrast between the object and its background, atmospheric attenuation, size and shape of the viewed object, color contrast, and distance between the object and the observer. Brightness contrast will diminish as a function of increased distance because of the atmospheric effects on the dispersion of the light from the source. Contrast is defined as:

$$C = \frac{B_o - B_b}{B_b}$$

where:

C = contrast

B_o = brightness of object

B_b = brightness of background

Negative contrast ($C < 0$) exists when the object is less bright than its background. Conversely, positive contrast exists ($C > 0$) when the object is brighter than its background.

The maximum negative contrast value is -1. This condition would hold for a black object, which has a brightness value of 0. However, positive brightness contrast can, theoretically, range to infinity. It has been demonstrated that contrast decreases as an exponential function of distance.

Siegel and Crain (1961) investigated the effects of size and shape of chromatic stimuli on detectability. Their experiment demonstrated that: (1) a single stimulus, of a given area, was more effective than that stimulus divided into halves and the halves separated by some distance, (2) the greater the separation (disorganization), the less effective the stimulus, (3) a stimulus of a given area becomes more effective as it becomes less rectangular and more square-like in shape, and (4) increasing the stimulus size, regardless of shape, increased the effectiveness up to a point (20-25 minutes of visual angle), after which further increases in area did not yield increases in effectiveness. An Applied Psychology Corporation study (1961c) indicated that single stimuli (square or rectangular) do not differ in threshold contrast from circular stimuli. Noncompact single stimuli (very long and linear) will require greater contrast in order to be as effective as the compact squares, rectangles, or circles.

Color contrast may provide improved visibility under proper conditions. In a laboratory study (Crain & Siegel, 1960) and in two field studies (Federman & Siegel, 1961; Siegel, 1961), the range over which a chromatic stimulus was seen as achromatic was less for fluorescent pigments than for ordinary pigments. The finding was in accord with expectancy, since fluorescent pigments produce saturation amplification. Thus, when fluorescent stimuli are viewed, they are more likely to be seen as hues and to possess a detectability advantage as a function of chromatic contrast. However, color contrast will not be effective if the size of the chromatic area is less than one degree of visual arc.

Reducing Midair Collisions

A number of techniques have been suggested to reduce the incidence of near misses or of midair collisions. These include (Midair Collision Avoidance, 1971): (1) conducting flights according to instrument flight rules, (2) certifying that all communications, navigation, and identification equipment are functioning at takeoff, (3) avoiding areas of known traffic congestion (e. g., student practice areas and airport approach zones), (4) filing IFR, (5) knowing hemisphere rules, and (6) being vigilant in terminal areas where midair collisions are most likely to occur.

In an FAA survey, pilots were requested to submit their recommendations for reducing midair collisions. The key recommendations included: establishing arrival and departure routes in terminal areas, improved air traffic control, placement of control towers at other locations, improving terminal radar facilities, and educating pilots about the airspace and operational environment in which they will be flying (Townsend, 1969).

Electronic detecting devices, such as would be contained in proximity or pilot warning indicators (PWI) and collision avoidance systems, have been emphasized in a fair portion of the research and development that has gone into anticollision devices in recent years (Smith, 1971). However, regardless of the success of such devices, the pilots' vision will remain a powerful warning device. As Siegel and Lanterman implied (1963), the simpler warning devices alert the pilot to the presence of a hazard. The pilot still must identify the potential hazard, know the appropriate evasive action, and initiate the evasive action. Hence, the need still exists for detectable and conspicuous aircraft exteriors. Additionally, weight, cost, and maintenance penalties may impact the use of complex alerting and warning systems for certain private and military applications.

Recent photographs of the Soviet airline's Aeroflot Transport AN-12B indicate the presence of lookout positions in the nose and tail. Since Aeroflot has never reported a midair collision or a near miss, it is suspected that these lookout positions may be manned on takeoff, landing, approach, and climbout. Traffic can be plotted from these positions and provided to the flight deck in terms of continuous vectors (Aeroflot's "secret" CAS, 1971).

Townsend (1969) cited the FAA comment that "Pilot responsibility for maintaining a vigilant lookout to see and avoid other aircraft must be emphasized." It is apparent that pilots flying in VFR conditions, but operating under IFR flight rules, as well as pilots flying under VFR flight rules are not employing adequate lookout vigilance for other aircraft. In order to maximize lookout effectiveness, visibility obstructions (e. g., window frame, fuselage structure, wings, and nacelle) should be carefully designed and the use of proper scanning techniques should be employed (e. g., systematic moving of head and eyes over the entire area of visibility for daylight scanning).

Although there are many areas in which improvements can be made so that midair collision potential is reduced, inflight discernibility of aircraft must not be undermined. Anticollision lights are useful in marking aircraft. However, they are not without their disadvantages. If the sky is filled with lights, the result could be an environment of ambiguous signals. A standardized pattern of lights would alleviate this problem situation. Other problems with the use of lights are the backscatter effect on the pilot and the illumination of cabin structures in the pilot's field of vision. As the result of a series of studies into aircraft detectability and visibility, the Applied Psychology Corporation concluded that sector information, as provided by aircraft light systems, does not furnish the pilot with sufficient information to avoid a midair collision. Although this information can alert the pilot to the existence of a collision threat, its usefulness is extremely limited for successful collision avoidance (Applied Psychology Corporation, 1961b).

Colored markings aid inflight detection of aircraft under daylight viewing conditions. High visibility fluorescent hues have been demonstrated to contribute more to attention focusing and to increasing detection distance than their ordinary paint counterparts. Consequently, fluorescent markings have been suggested as a partial detection aid. The following exerpts from an Air Force memorandum* point out one instance of an attributed reduction in midair collisions due to the fluorescent marking of Air Training Command aircraft.

> ...During the 12-month period ending June 1, the number of midair collisions involving Air Training Command planes was 75 per cent lower than the average for the two previous years, according to...director of flying safety at Randolph AFB Headquarters....This reduction in midair collisions did not just happen;but was the result of an experiment started a year ago,....The Air Training Command...decided to paint its planes so that they might be more easily seen....Day-glow 'blaze orange' fluorescent paint which glows by daylight was selected...wing tip fuel tanks..., bands around the fuselage and painted engine cowlings made the aircraft easily visible in flight....Only two 'see and be seen' accidents occurred, as compared to nine during the previous 12 months, and seven the year before. Aircraft involved in 'see and be seen' accidents during the test period had not been painted with

---

* *USAF Air Training Command Reduces Mid-Air Collision Rate*. Public Information Division, Office of Information Services, Air Training Command, Randolph Air Force Base, Texas, July, 1958.

> fluorescent paint....ATC's mid-air collision rate during the past 12 months is lower than that of the Air Force average for the first time....Many things are being done to prevent these accidents (mid-air collisions) but we believe the biggest factor for our reduction...is the fact that our aircraft are painted so that they can be seen in flight. It all boils down to the simple fact that most mid-air collisions occur because the pilots do not see each other. Paint the aircraft so that pilots can see and be seen and you reduce the number of mid-air crashes.

Visual Properties of Fluorescent Pigments

Fluorescent and ordinary pigments have different spectral energy radiation patterns. Fluorescent pigments interact with energy from the ultraviolet, blue, and green region of the spectrum and reemit this energy, along with the reflected light, to yield enhanced brightness and color purity.

> ...most of the absorbed portion of light is not dissipated as heat...but, instead, is transformed into emitted light of the same hues as that being reflected by the pigments (Switzer Brothers, Inc.).

Conventional pigments do not have this ability; they absorb and reflect incident light. Thus, the added energy reflected by fluorescent pigments yields greater visibility. Kulp and Rowland (1959), in a related review of the literature, concluded that daylight fluorescent finishes are superior to normal finishes in terms of conspicuity enhancement.

The Applied Psychology Corporation (1959) maintained that fluorescent pigments are in a class with white or other very light colors because their reflectance is two to four times as great as that of nonfluorescent pigments of the same hue. Thus, they suggested that:

> ...if it is desired to make a pattern using two colors, one light and the other dark, one such pair might be white and non-fluorescent red-orange. If, however, one of the colors desired has already been determined to be fluorescent red-orange, then the second color should not be white but a dark color, say dark gray or green (non-fluorescent). If viewing conditions are good--large areas, high illumination, little atmospheric attenuation--then the fluorescent red-orange might provide good color contrast with a light background even though brightness contrast would be low. In less favorable viewing conditions, color contrast might be less helpful, but the dark alternating color might provide better brightness contrast against a light background (p.19).

Early fluorescent paints possessed a limited useful life. However, recent technological advances have improved their useful life. Hanson and Dickson reported that the end of useful fluorescent life has been reached when the pigment loses 33 per cent of its original brightness, as measured on a fluorescent photometer. They reported further that fluorescent yellow-orange material has a useful fluorescent life of two years when exposed vertically, facing south, in Texas. Fluorescent red-orange was found to have a useful fluorescent life of 2.5 years, under the same exposure conditions. Useful life of fluorescent pigments is directly related to the amount of radiation (ultraviolet rays) incident on the surface of the fluorescent material. Thus, exposures in directions other than south, in the northern latitudes, will result in longer useful life.

Research Findings on Fluorescent Visibility/Detectability

The results of a laboratory study (Siegel & Crain, 1960) investigating fluorescent and ordinary paints, in terms of the limits of the visual fields, indicated that fluorescent paints have larger perimetric fields than ordinary paints. The differences were found to be statistically significant. The perimetric fields were determined by obtaining threshold measurements for the "outside" and the "inside" limits, for each stimulus hue tested. The stimuli were brought in from the periphery and the subject identified the point at which the stimulus was first perceived (outside limits) and again the point at which the true color was first perceived (inside limits).

In a second study (Crain & Siegel, 1960), threshold measurements were obtained in a laboratory experiment for fluorescent and laboratory colors. Two threshold measurements per stimulus color and pigment type were obtained. They were the object threshold, which was defined as the lowest tachistoscopic exposure interval necessary for identification of the presence of a stimulus, and the color threshold, i. e., the lowest tachistoscopic exposure interval necessary for the identification of the color of the stimulus. The results indicated that the fluorescent paints had lower color thresholds than their ordinary paint counterparts and that the ordinary paints had lower object thresholds than their fluorescent paint counterparts.

In five laboratory studies, conducted by the Applied Psychology Corporation (1961c), the conspicuity of paint patterns was investigated. The results indicated that: (1) painting the top of the aircraft with fluorescent pigments and the fuselage bottom with ordinary pigments is advantageous, (2) fluorescent red-orange is most conspicuous, (3) the greater the area covered by fluorescent paint, the greater the conspicuity, (4) conspicuity is not enhanced when painted areas are divided into an effort to increase brightness contrast, (5) massing the painted area, as opposed to distributing the same amount of paint over the plane, enhances conspicuity, and (6) conspicuity for different patterns is not affected by differences in flight attitude or background.

Since aircraft attitude can serve as a visual cue in evaluating collision threats, each of the patterns used in the conspicuity studies of the Applied Psychology Corporation was tested for its value in indicating flight attitude information. The major finding was that paint patterns do not greatly affect pilot judgments of aircraft attitude. It appears that the subjects depended on aircraft aspect as the cue for attitude determination.

The studies reported above were all conducted under laboratory conditions where many variables could be controlled so that other variables could be tested in their purest condition. However, laboratory experiments do not provide for the atmospheric attenuation that would be found in the actual flying situations. Several different studies have been performed in the field where more realistic conditions can be achieved. In a study performed by Siegel (1961), several different chromatic stimuli were tested under two background conditions: clear sky and cloudy sky. Two types of data were collected: (1) the maximum distance at which the presence of each stimulus could be detected (object threshold), and (2) the distance at which the color of each stimulus became visible (color threshold). To collect these data, the subjects were taken to a distance from the target stimuli which rendered the stimuli subliminal and then slowly driven toward the target stimuli. For the clear sky background

condition, white, fluorescent yellow-orange, and fluorescent red-orange were the most detectable. For the cloudy sky background condition, fluorescent red-orange with a blue medial stripe, ordinary orange, and fluorescent red-orange with a white medial stripe were the most detectable. The general conclusion was drawn that lower color thresholds obtain for fluorescent stimuli.

An extensive field study performed by Hanson and Dickson (undated) examined the effectiveness of fluorescent and nonfluorescent pigments (yellow, red, white, international orange, fluorescent yellow-orange, and fluorescent red-orange) as viewed against three different backgrounds (white, tan, and olive drab), at three time periods (noon, 3 p. m., and 6 p. m.), for four directions (north, east, south, and west), and under two different sky conditions (clear sky and solid overcast). Detection range data were collected, i. e., the distance at which a target became visible, and recognition range data, i. e., the distance at which a target could be identified by chromatic hue. Observers approached the panels containing the stimuli in an automobile traveling at a speed of five miles per hour, from a distance of 2, 000 feet (at which no target was detectable). The findings indicated that fluorescent yellow-orange had detection and recognition ranges that were, respectively, six per cent and 29 per cent greater than the ordinary pigmented targets. The differences found among the targets were statistically significant. Fluorescent yellow-orange had a recognition range 82 per cent greater than international orange, its comparable conventional color. Also, fluorescent yellow-orange was a more efficient pigment regardless of direction, time of day, or background. In addition, the results indicated that when blue light was predominant the superiority of fluorescent pigments increased (a demonstration of the conversion property of the blue wavelength to orange that is inherent in fluorescent pigments). As visibility conditions deteriorated, the relative performance of fluorescent pigments increased.

Applied Psychology Corporation performed a field study (1961c), which was designed to validate the findings of their laboratory studies. Six paint patterns were used to test: (1) the effect of different brightness treatments on the top and bottom of the aircraft, (2) the effect of different amounts of fluorescent red-orange paint, and (3) the effect of splitting a given area of paint into several separated areas. An all aluminum model of an airplane was included as a control stimulus, along with four other aircraft models on which the paint patterns were displayed. One-half of the observations were made during clear cloudless weather and the other half under overcast sky conditions. Measurements were obtained for the number of times each aircraft model was detected and for the accuracy of the perception of the aircraft model's flight attitude. Observers were allowed three seconds to view a single model in one of 108 flight attitudes. Little difference was found in

the detection of the aircraft models. However, the painted models outperformed the all-aluminum model slightly. Weather conditions also were found to have little effect on detection of aircraft models. The same results held for the accuracy of flight attitude measurements. Thus, the laboratory findings of the studies performed by the Applied Psychology Corporation were verified.

The Applied Psychology Corporation has also performed three flight studies in which visual detection thresholds of various aircraft and paint patterns were obtained. Observers viewed a painted aircraft from the control tower at the beginning of its takeoff and tracked it visually until its hue was no longer distinguishable (color threshold). The observers also indicated when the aircraft disappeared from view (detection threshold). For arriving aircraft, the observers were told to scan a certain sector and report as soon as they detected the aircraft, and again to report the predominant color of its paint pattern. No differences were found between fluorescent paint patterns and ordinary paint patterns for the detection threshold. However, color thresholds were superior for the fluorescent paint patterns. The average color threshold for fluorescent colors (red-orange, orange, and yellow-orange) was 2.3 miles, as compared with 1.0 miles for the conventional red and orange equivalents.

Based on their research, the Applied Psychology Corporation drew the following additional conclusions: (1) paint patterns for close range situations should be simple and unambiguous so that they can be perceived quickly, (2) paint patterns should be used to provide information regarding an aircraft's structural characteristics so that an aircraft seen head-on can be readily distinguished from one seen tail-on, (3) fluorescent reds and oranges are preferred over other fluorescent colors since they have a color contrast advantage with the natural backgrounds, (4) light colors (pastels) should be used on the upper half of the fuselage and wings, thereby taking advantage of a positive contrast against darker ground backgrounds, whereas dark colors (black, green, maroon) should be used on the bottom half of the fuselage and under surfaces of the wings, taking advantage of negative contrast against lighter sky backgrounds, (5) fixed surfaces of the tail assembly should be painted with fluorescent red or orange, and (6) the cost of fluorescent coatings is high, but the gain in visibility and the subsequent potential for midair collision avoidance may be worth the added costs.

Other field studies into the detectability of fluorescent and ordinary pigments have been performed by various organizations and under varying conditions. The Medical Research Laboratory of the U. S. Naval Submarine Base (1955) tested fluorescent and conventional pigments against a sea background. The fluorescent paints involved showed greater detection distances than did the ordinary paints. The results of the study also suggested that: (1) high brightness and high saturation contribute to detectability, (2) detectability correlates highly with total contrast, and (3) white possesses considerable detectability under certain conditions. In reasonable agreement with these findings were those of Blackwell (1960), who investigated the visibility of various chromatic and achromatic stimuli. He found little difference between fluorescent and ordinary paints for overcast days and sky background. However, under clear sun conditions, fluorescent paints possessed a marked superiority. Combining overcast and clear sun conditions, Blackwell's data suggested the following rank order of detectability: fluorescent yellow-orange, white, fluorescent red-orange, international orange, gray, and black.

Federman and Siegel (1962) examined fluorescent and ordinary pigments under various conditions. In the first study, the stimuli were stationed on the roof of a three-story building; accordingly, an unimpeded sky background was present during all sightings. In the second study, a hexahedral structure containing six stimuli was attached to a metal support pole and mounted on a tower 23 feet high. All viewings were from east to west. The stimuli employed were essentially the same in both studies: fluorescent yellow-orange, fluorescent red-orange, fluorescent red-orange with a white medial stripe, fluorescent red-orange with a blue medial stripe, ordinary orange, and white. In the second study, fluorescent red-orange with a blue stripe was replaced by white with a black medial stripe. Object and color thresholds were obtained by bringing the subjects toward the stimulus from a distance at which the targets were not visible. In the first study, all measurements were taken under clear sky conditions. In the second study, the stimuli were viewed under three different conditions: sunny a. m., sunny p. m., and cloudy. The object threshold data of both studies indicated that the fluorescent yellow-orange and fluorescent red-orange stimuli were significantly superior to the fluorescent red-orange with the medial stripe, white, and the fluorescent red-orange with white medial stripe. The latter two stimuli were, in turn, more effective than the white with a black medial stripe and the ordinary orange. The sunny a. m. condition was significantly more favorable for these viewings than the other two conditions. The color threshold data of the two studies indicated again that the fluorescent pigments can be identified at greater distances than the ordinary paints.

Two experiments, performed by Siegel and Lanterman (1966), investigated the comparative conspicuity of three different stimuli, equated for luminescence, but of different purity and different dominant wave lengths. The subjects performed a simulated flight and responded to the stimuli as they appeared at various azimuth locations against a simulated sky background. The conclusions reached were: (1) conspicuity varies with dominant wave length, (2) purity exerts an effect upon response latency and conspicuity, (3) chroma exerts a greater effect upon conspicuity than does purity, and (4) fluorescent red-orange is superior to international orange for increasing aircraft conspicuity.

Siegel and Lanterman (1963), as part of the ongoing program at Applied Psychological Services into aircraft detectability and visibility, interviewed 96 pilots for the purpose of obtaining attitudes and opinions of the efficacy of then current fluorescent paint schemes in operational situations. A part of the interview involved "near miss" critical incident data. The near miss data obtained from the interviews suggested that the typical collision precursory situation is during daylight under near optimum visual conditions, below an altitude of 10, 000 feet, and in an airport control area or during level flight. The airport control area was thought to be the most important for determining the presence of an intruding aircraft, and the conditions of takeoff, climb, landing, cruise, and holding in the airport control area did not seem to differ from each other in terms of importance.

The pilots interviewed believed that high visibility paints should be used for increasing aircraft conspicuity and detectability, rather than for coding and identification. Many pilots were able to cite specific situations in which the fluorescent paint was attributed as the primary cue in detecting an aircraft which might otherwise have gone unseen. It also became apparent that the more experience a pilot had with high visibility paint schemes, the more he accepted their use.

In a set of interviews with maintenance personnel (Siegel & Lanterman, 1963), ease of application and durability of fluorescent paint were investigated. The maintenance personnel interviewed indicated that durability problems, often attributed to fluorescent paint, are a function of faulty application procedures. Similarly, trained maintenance personnel found no important difficulty in the application of fluorescent paint as compared with ordinary paint.

Fluorescent Paint vs. Fluorescent Film

Fluorescent pigments may be found in many different types of material--paint, film on tape, inks, resins, and fabrics. The only two practical media for use in marking aircraft with fluorescent pigments are paint and tape. The tapes are produced of a plastic material. The films are composed of a white undercoat, three coats of fluorescent paint, and (in some cases) one coat of a clear lacquer containing ultraviolet inhabitors, all bonded together on the plastic tape, and backed with a pressure sensitive adhesive material. Fluorescent paints, when applied to an aircraft, would consist of the same number of coats as the film.

A major advantage of the fluorescent films over the paint is that the film thickness can be controlled in the manufacture, whereas in hand spraying, it is somewhat difficult to apply the requisite thickness uniformly over the entire painted area. The consequence of uneven thickness is that paints fade more quickly in areas of less coating thickness and produce a mottled effect. Other apparent advantages of the film are: fewer tools are needed for application (a squeegee and a cutting implement may be the only tool needed to apply the film, and occasionally a heat gun is used to soften the adhesive when removing the film from the aircraft), faster application, no drying time, reduction in maintenance down time, and ease of removal. The plastic films generally retain their flexibility in temperature extremes (e. g., -50° to 225°), are relatively solvent resistant (i. e., to aliphatic compounds but not to aromatic and ketone based solvents), and have a shelf life of several years (if stored in a dry place where temperatures are below 90°).

Some of the obvious disadvantages of the film are the need for edge sealing to prevent liftoff (especially in high slipstream velocity areas), difficulty of application to compound contours (e. g., the nose of the aircraft), difficulty with covering rivets and seams, the possibility that the film will conceal skin corrosion, and film cracking. Early films also tended to be difficult to apply because of air bubble formation. However, recent innovations in the manufacture of the film have almost entirely negated the problem of entrapped air through the introduction of perforated film. The perforated film also facilitates application around protrusions on the aircraft (e. g., rivets and seams). The quality of the adhesive material used has been improved over the years so that peeling and lifting does not occur as readily as it once did. Solvents must be used to break the bond of certain of the adhesives.

In general, the following is performed when applying fluorescent paint to a noncorroded, unpainted aircraft*: areas to be painted are cleaned with soap and water; areas not to be painted are masked; an alodine solution (or other etching material) is applied to the exposed areas; the etching material is washed off; the surface is sprayed with one coat of white paint; the surface is sprayed with three coats of fluorescent paint; the surface is sprayed with one coat of a transparent protective overcoat.

The following is involved in the application of pressure sensitive film (Military Specification, 1973): the surface is wiped clean with lint free paper or cloth toweling; the area to be covered is washed with cleanser to remove grease and dirt and rinsed with clean water (alternatively, the area may be rubbed with an abrasive pad and rinsed); the backing paper is removed from the film; the film is set in place on the aircraft and pressed with a squeegee to remove entrapped air and wrinkles; exposed surfaces are sealed (one-fourth inch on both sides of film edge).

The following suggestions have been made to facilitate the application of pressure sensitive film to exterior aircraft surfaces (American Airlines, 1971): (1) if film is applied in pieces or sections, apply lowest piece first, then work upward, (2) start at the aft end and work forward (e.g., apply lower aft piece first, then lower forward, upper aft and finally upper forward piece--this will assure that overlaps are directed away from the wind stream), (3) when trimming film that has been placed on the aircraft caution must be exercised not to cut into the aluminum skin, and (4) position contiguous sections of film so that there is 0.5 inch overlap on the section previously applied.

The Air Force set down several requirements that manufacturers of pressure sensitive, adhesive backed film must meet in manufacturing film to be be used by the military in marking exterior surfaces of aircraft (Military Specification, 1973). The areas of concern to the military are the following:

---

*ATC Regulation 66-1, Attachment 1, May 15, 1956.

1. Color--as compared against published military standards

2. Film thickness--as measured by a micrometer

3. Tensile strength--not to be less than 18 pounds per inch width

4. Elongation--tested in accordance with published military standards

5. Shrinkage--not more than 1/64 inch in any direction after specified shrinkage tests have been performed

6. Flexibility--there should be no evidence of breaking or cracking after the film has been folded forward and backward 20 times; tests are also performed after exposure to low temperature and high temperature conditions

7. Adhesion--tests are performed as specified under typical and low temperature conditions

8. Corrosivity--tests are performed to determine if there is evidence of corrosion (an acid reaction) on metal surfaces that are under the film

9. Water resistance--the film should exhibit no evidence of blistering, peeling, or color change after submersion in water for extensive periods

10. Fuel resistance--film that had been immersed in a hydrocarbon test fluid should be equal in all respects to the unexposed portion

11. Hot oil resistance--test panels of the film should exhibit no discoloration, blistering, or edge attack after bathed in hot oil for a specified period

12. Salt spray resistance--after exposure to salt spray, the test film should exhibit no evidence of blistering, peeling, edge lifting, or loss of color and gloss

13. Accelerated weather resistance--there should be no evidence of color or gloss deterioration, cracking, or loss of adhesion after being enclosed in an accelerated weathering unit for 500 hours (a slight* loss of gloss and/or color is acceptable)

14. Outdoor weather resistance--there should be no evidence of peeling, fading, cracking, blistering, diffusion or bleeding of color, or loss of adhesion after exposure for one year in Florida facing south at a 45° angle to the horizon (a slight* loss of gloss and/or color is acceptable)

15. Storage stability--the film must meet all of the requirements specified above after 12 months of storage in a moderate temperature range.

Purpose of Present Program

The objectives of the present program were to:

1. survey manufacturers to determine the availability of pressure sensitive fluorescent and nonfluorescent film (and similar materials) which may be used in marking aircraft for visibility enhancement purposes

2. determine the ease of installing the pressure sensitive film, its expected life, its maintenance requirements and special problems, typical aircraft marking configurations, and costs (including material, labor, and labor overhead) as they apply to civil aircraft

3. estimate the weight and drag of the pressure sensitive film markings, fluorescent paint markings, and polyurethane paint markings for each of three different marking schemes for the following aircraft--Cessna 172, Piper Comanche, Beech Baron, De Havilland Twin Otter, Grumman Gulfstream, Fan Jet Falcon, and Boeing 737.

*Slight is defined as those changes which are visually noticeable when compared to unexposed material and can be considered minor changes.

In order to accomplish the first two objectives, manufacturers of the pressure sensitive film and users (i. e., military and civil) of both the pressure sensitive film and polyurethane paint were interviewed. The description of the interviews and the results are presented in Chapter II of this report. The results relative to the third objective, the weight and drag estimations, are presented in Chapter III.

CHAPTER II

EVALUATION OF PRESSURE SENSITIVE ADHESIVE BACKED FILM

In an effort to evaluate the use of pressure sensitive film which may be used for marking aircraft so as to enhance their conspicuity in today's VFR "see and be seen" environment, various manufacturers and users (e. g., aircraft owners, pilots, supervisory and technical maintenance personnel, and military organizations) of the materials were interviewed to determine their experiences and insights relative to these materials.

Twenty-three interviews were conducted at four manufacturers of pressure sensitive adhesive backed film and at one fabricator of fluorescent pigments. The organizations represented were: Minnesota Mining and Manufacturing Co., Hercules, Inc., Fasson, Morgan Adhesives Co., and Day Glo Color Corp. (a fluorescent pigment fabricator).

Twenty-six interviews were conducted at commercial establishments (airlines and aircraft manufacturers) and the military. The interviewees had experience with the film and/or similar techniques for marking the exterior of aircraft. However, many of the interviewees had not used the most recently manufacturered fluorescent pressure sensitive film for conspicuity marking purposes on aircraft. Therefore, many of the shortcomings of the fluorescent film (including the fluorescent pigments, film quality, and adhesive quality) as indicated by the interviews with the user organizations should be tempered because their experience with the product is dated. In essence, some of the negative comments, although stated in a general context, were made on the basis of experience with a product which is not completely current. Moreover, the experience of some of the interviewees with currently manufactured pressure sensitive decals would not provide full information on the merits of fluorescent pressure sensitive film. The size, pigments, and location of decals on the aircraft would not be fully pertinent to the use of film as used for marking aircraft for conspicuity enhancement.

The commercial and military organizations represented were: Cessna Aircraft Co., American Airlines, Eastern Airlines, The Boeing Co., Naval Air Development Center, Wright-Patterson AFB, Robins AFB, Coast Guard Headquarters, and U. S. Army.

Attention was given to geographic location in the selection of user organizations, so that the differential experience of the interviewees relative to the effects of sunlight, temperature, and humidity on the marking materials could be reflective.

The interviews at each organization were conducted individually. Accordingly, interviewees were not influenced by the responses of others. The semistructured interview format was followed. This format ensures complete coverage of the content areas by allowing the interviewer the opportunity to probe and to followup salient responses. Direction questions, open ended items, as well as rating (magnitude estimation) and paired comparison techniques were used.

Results: Manufacturer Interviews

Advantages of Film for Marking Aircraft

Several specific advantages of the fluorescent film were repeated over many of the interviews conducted at the manufacturing organizations. The representatives of these organizations stressed the ease with which the film may be applied. Under most conditions, no masking is involved prior to applying the film, as is done when marking with paint.

Typically, the aircraft need only be washed and perhaps chemically etched in those areas to be covered by the film. Consequently, the time invested in surface preparation of the aircraft is decreased. Application of the film is further facilitated because shapes and patterns can be specifically precut by die and premasked. Premasked film contains a layer of protective paper and a layer of conjointive paper. The protective paper is used to protect the adhesive back and a top premasking layer holds sections of film or letters together. If words, letters, logos, or patterns are used, the top layer of paper holds the parts in place so the technician need only line up the film and not be concerned with the problem of even spacing. The conjointive layer of paper is removed after the film has been applied to the aircraft. Repositioning or realigning the film, if necessary, is easily accomplished with pressure sensitive film. The film can be lifted and reapplied since the adhesive backing will not hold the film firmly in place until final pressure is applied after permanent positioning.

In addition to the inherent qualities of pressure sensitive film, discussed in the preceding chapter (e. g., quality control, even fading across large surface areas, no drying time, etc.), the manufacturers pointed to the cost savings which result from using film. Estimates of a one-third saving were given for the use of fluorescent film over fluorescent paint. The cost savings result primarily from the reduction of labor and the ancillary equipment needed to mark an aircraft (a later section of this chapter will compare quantitatively the cost of marking aircraft using different materials).

A problem that occasionally occurs with painted markings that was reported as hardly ever occurring with perforated films is the chipping and cracking which may result from the vibration, expansion, and contraction of the aircraft shell. The films are designed to be flexible and therefore are said to withstand such stresses.

The films do not appear to present a maintenance problem as far as washability is concerned. They may be cleaned with any detergent. The fluorescent films can withstand certain of the caustic solvents that are found in hydraulic fluids. Aromatic and keytone solvents will attack the adhesives and color coats and destroy them. However, aliphatic solvents will not destroy the base vinyl tape, the adhesive backings, or the acrylic overcoat. Diester engine oils are also very destructive to the fluorescent film. A problem may arise if the solvents come in contact with the adhesive backing, as might occur if parts of the edge sealer have worn or if the solvent enters through the perforations in the film.

Disadvantages of Film for Marking Aircraft

A major problem involved in applying film to aircraft is covering severe compound surfaces, such as the nose. The film has a tendency to wrinkle and trap air when applied over these surfaces. The suggestions for overcoming this problem were: (1) apply strips of film rather than large sections, (2) paint the compound surfaces so that they blend into the simple contoured or flat surfaces covered with tape, and (3) use the heat technique, whereby the thermoplastic film is softened to the degree that it may be molded to difficult surfaces.

Other problems in applying the pressure sensitive film involve covering seams, rivets, and protrusions. It is difficult to apply the film over these without forming bubbles and wrinkles. Manufacturers recommend the use of perforated film for this purpose. Perforated film will enhance the application by allowing entrapped air to escape.

Technicians find it difficult to apply and align very large sections of film. To overcome this problem, the manufacturers recommend: (1) applying full pressure to the adhesive backed film after it is properly positioned, and (2) using the wet technique (which can only be used with certain adhesive backed films) whereby either the surface of the aircraft or the adhesive backing is dampened with water. The film is then applied to the aircraft, but it may be moved. When it is in its fixed position, the excess water is removed with a squeegee.

The maintenance problems with pressure sensitive films appear to be minimal. Precautions need to be taken so that there are no seams on the leading edges of the aircraft. Seams represent weak spots and if subjected to harsh winds (as in the slipstream) might tear or rip. The manufacturers are somewhat satisfied with the advances that have been made with the adhesives (which are considered to be permanent), the film, and the life expectancy of the fluorescent colors. Whereas in the past the fluorescent qualities of the film had a life expectancy of . 5 to 2 years, the life expectancy of the fluorescent pigments that have been manufacturered for the past 2 or 3 years has increased so that the range is reported to be from 1 to 3 years. Exposure to the ultraviolet component of the sun is the key variable which determines the effective life of the fluorescent pigments. Consequently, fluorescent films can be expected to have a shorter life expectancy when applied to aircraft that are maintained in sunny climates (e. g., Florida, Texas, Arizona) and a longer life expectancy in northern sectors of the country. The effective life of the fluorescent film could be extended by: (1) hangaring aircraft when they are not in use in the daytime, (2) using more than three coats of fluorescent material, (3) decreasing the proportion of fluorescent pigments while adding pigments of the conventional color, (4) increasing the amount of fluorescent pigments, and (5) adding a thicker coat(s) of the lacquer containing the ultraviolet ray inhibitors. The latter two solutions, however, bear the disadvantage of additional weight, which could affect the speed and efficiency of the aircraft.

The manufacturers reported that many potential users of fluorescent markings bear negative attitudes toward the fluorescent hues from the point of view of their esthetic qualities. Fluorescent hues are sometimes viewed as garish, offensive, and associated with the "hippie" movement. So as not to be associated with these negative attitudes, many potential users (e. g., private and corporate owners and commercial airlines) have rejected the use of fluorescent markings on their aircraft. These attitudes must be evaluated against a backdrop of midair collisions. If the fluorescent hues can serve to reduce the loss of life and property, tolerating their "garishness" and "hippie" image may be a very small price to pay.

The manufacturers claim to have responded to many of the complaints that have been made relative to the films. The problem of peeling film was largely believed to have been resolved through the introduction of "destructible" film which chips or breaks away, rather than lift and peel off. The use of edge sealers and innovations in the bonding ability of the adhesives have further reduced the peeling problem. The solution to the light fastness problem associated with fluorescent hues is difficult since their effectiveness should not be compromised in the interest of added life. Mixing fluorescent pigments with ordinary pigments could degrade any visibility and conspicuity advantages of the fluorescence. However, as stated above, recent advances in the pigment technology are reported which increase color fastness without a negative effect on fluorescence.

Results: User Interviews

Advantages of Film for Marking Aircraft

On the whole, the interviews conducted with individuals who were either experienced with the use of pressure sensitive film for marking purposes or had experience with other marking materials, provided somewhat similar responses to those obtained from the manufacturers.

Individuals involved in the various facets of marking aircraft were primarily partial to the film for its color constancy, ease of application, and labor saving features. The point was made that although a somewhat skilled technician may be required to apply pressure sensitive film, the skill required for achieving a "good job" is somewhat less than that required for painting the markings. When painting markings, only one color can be applied. Then, drying must be allowed before the painter can remove the masking tape and cover the newly painted surfaces, so that adjacent surfaces can be painted with different colors. Finally, the toxicity problem involved in the use of paint is of concern. Various safety precautions, such as wearing masks, must be adhered to. The polyurethane paints, in particular, are extremely toxic and many environmentalists are concerned over their use.

From the maintenance point of view, the most significant advantage of the film, as seen by the users, is the case with which damaged sections can be repaired. It is relatively simple to remove a section containing a tear and replace it with a new piece of film. However, color matching must not be overlooked, especially with fluorescent film. Since fading occurs, if the film has been on the aircraft and exposed to the sun's rays for a period of time, color matching may be somewhat intricate and complicated. Matching may be facilitated by exposing the patch of film to the sun for a period of time until the fading approximates that of the marking on the aircraft.

Disadvantages of Film for Marking Aircraft

The principal disadvantage of the film, according to the users, relates to problems associated with covering large aircraft sections with a single sheet of film. It is difficult to accomplish this without wrinkling the film. Accordingly, the opinion was frequently expressed that the film has greater utility in covering smaller areas, whereas paint has the advantage when larger areas are involved. In order to overcome this problem and use the film, sections of film must be used which are small enough for the user to handle easily.

The conformability of the film over rivets is of concern to many users. Perforated film eases the problem considerably. However, covering rivets with pressure sensitive film does require added skill and time. Some users were concerned with the temperature range restriction involved in applying the film. This requirement applies at the low end of the temperature scale, that is, temperatures lower than 50°F. It is recommended that, where such temperatures prevail, the film be applied indoors.

The interviews conducted with military personnel indicated that corrosion was occasionally found under the pressure sensitive film. Unlike civil aircraft, military aircraft are constructed of more corrosive alloys and often are involved with salt spray reactions. Consequently, military aircraft require a coat of an anticorrosive paint before any markings can be applied. It is easier and perhaps less costly to complete the marking of the aircraft with paint rather than with pressure sensitive film.

According to the users, the films are more easily degraded than polyurethane paint by hydraulic fluids. They become discolored by these fluids and remain somewhat darker, even after thorough washings. If these fluids come in contact with the adhesive backing, the adhesive properties will be destroyed and the film will peel off the aircraft. The temperatures in the exhaust areas of the aircraft reach 300°-500°F. Since these temperatures exceed the upper temperature threshold of the film (250°F), the film would be destroyed in the exhaust area. For these reasons, exhaust areas and paths of blasts and spillage (e. g., along the belly of the aircraft outbound from the wheel wells) are avoided when marking an aircraft with films.

Marking Configurations

In order to evaluate further the possible impact of fluorescent marking on aircraft operation/maintenance, three different marking schemes were developed which are believed to possess conspicuity enhancement advantages. The marking schemes were applied to each of seven aircraft and then analyzed from the points of view of: added weight, added drag, and cost/utility comparisons.

The marking schemes are displayed in Figures 1, 2, and 3.

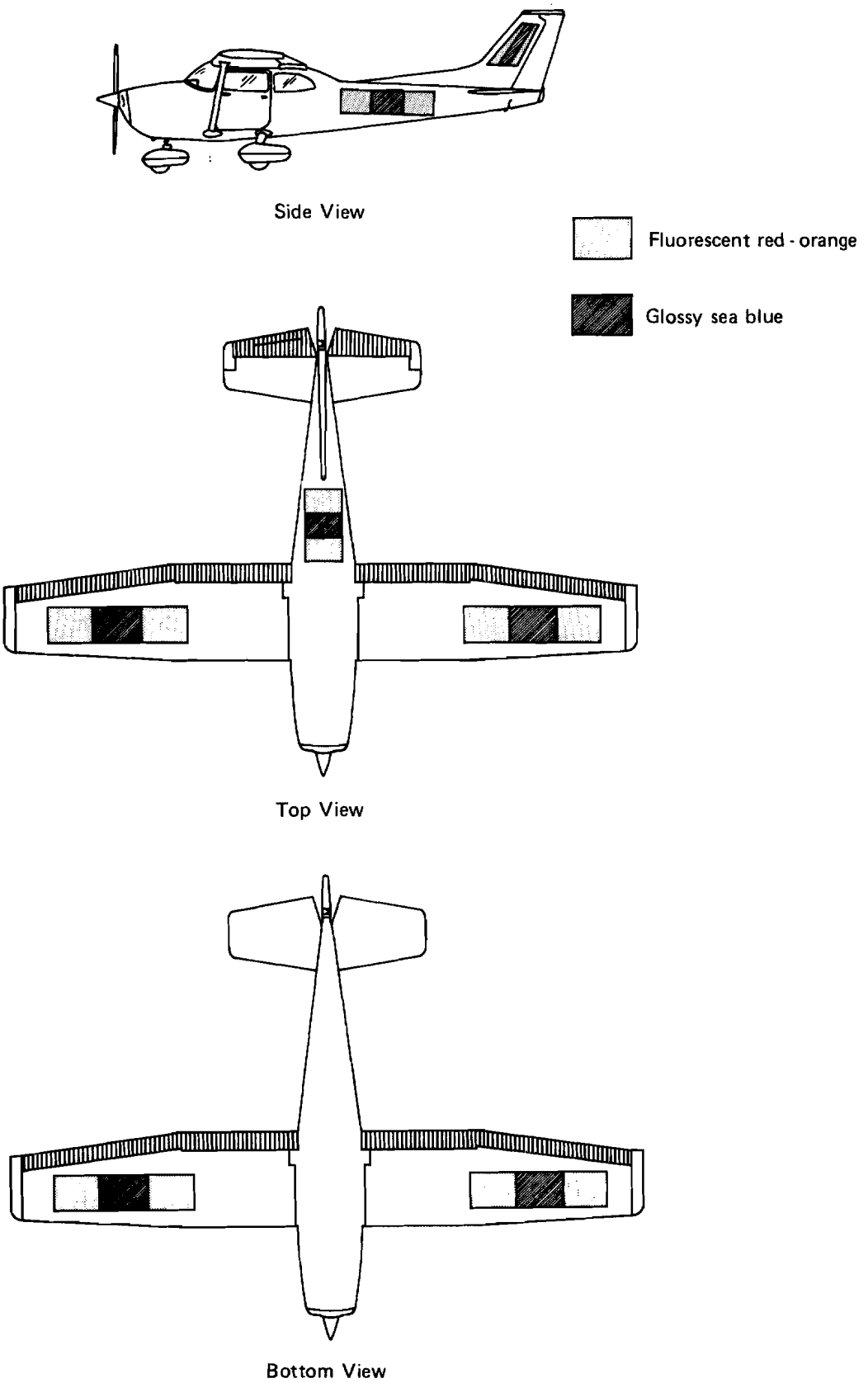

Figure 1. Marking scheme I on the Cessna 172.

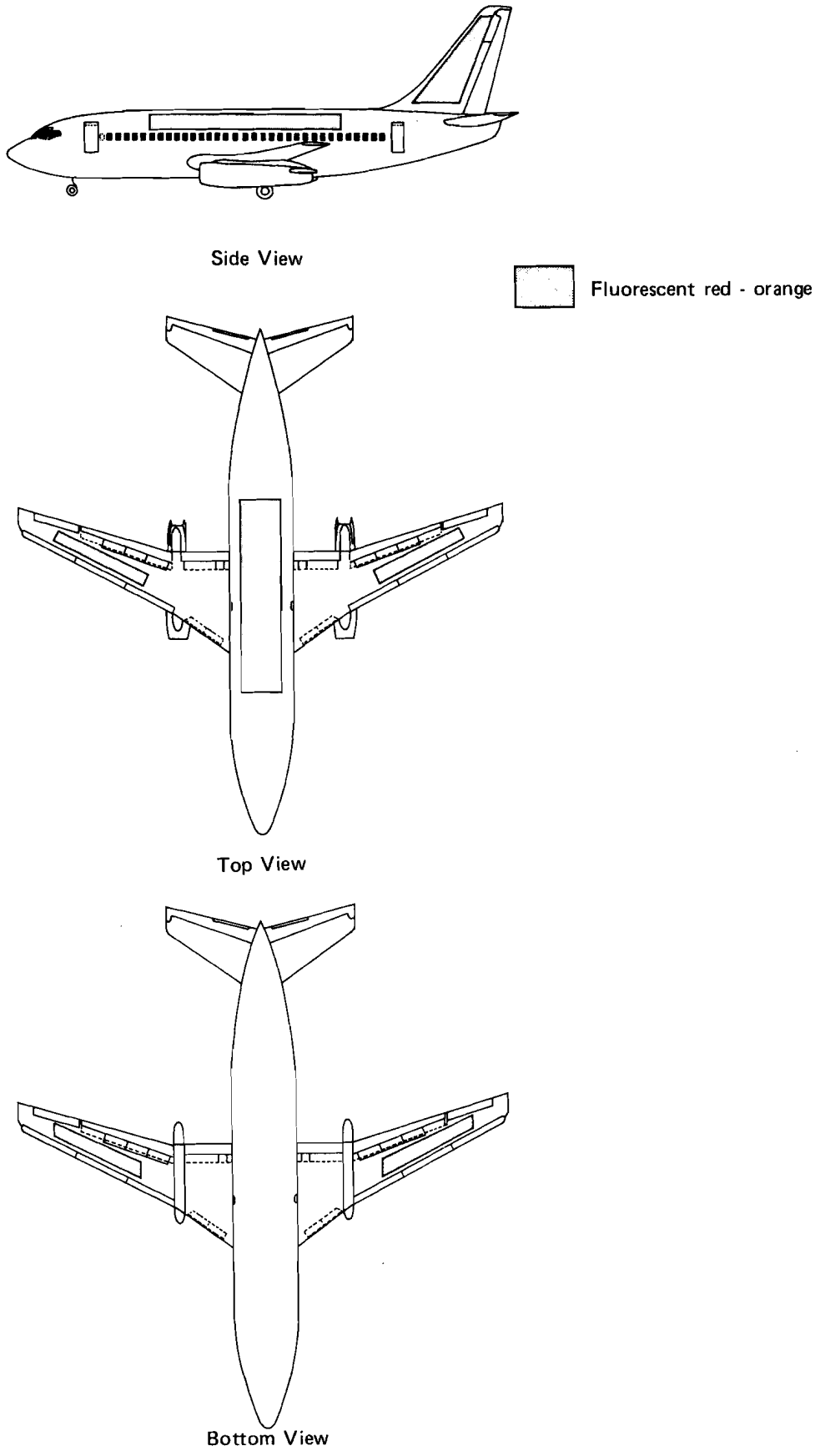

Figure 2. Marking scheme II on the Boeing 737.

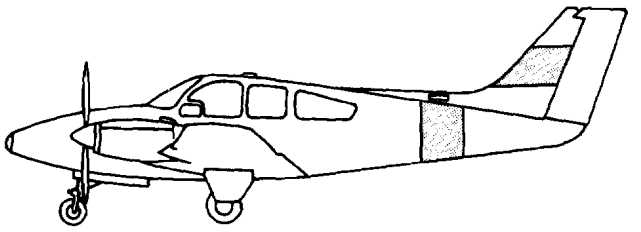

Side View

Fluorescent red - orange

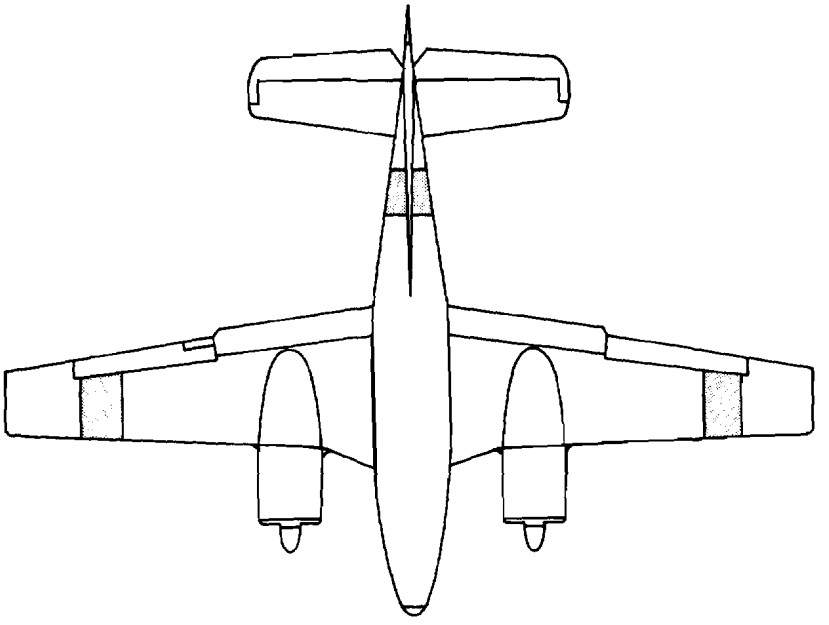

Top View

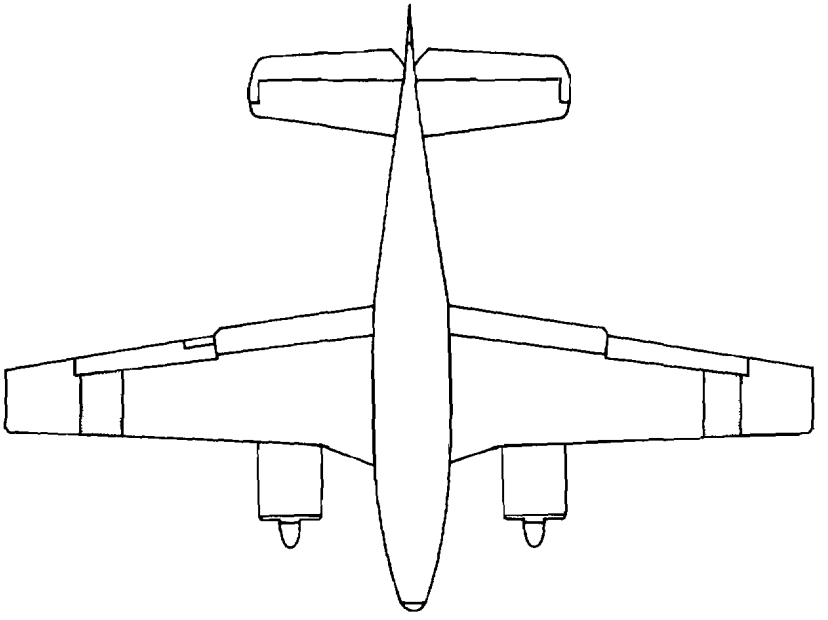

Bottom View

Figure 3. Marking scheme III on the Beech Baron.

Several criteria were employed in the development of the marking schemes:

1. use fluorescent yellow-orange or red-orange--the hue which most studies indicate to possess possible visibility/detectability advantages

2. enhance visibility/conspicuity from various observer angles

3. cover sizeable area to increase effectiveness

4. use simple patterns since they are easier and less costly to apply and possess conspicuity enhancement advantage

5. do not introduce spaces within a single marking (separated markings possess less detectability advantage)

6. use similar patterns to facilitate standardization of precut materials and hence reduce costs

7. avoid covering compound surfaces with thin film adhesive

8. avoid exhaust areas and hydraulic fluid and oil spillage areas

9. to increase internal and external color contrast, use a complementary hue in conjunction with the fluorescent coating

10. allow sufficient areas to remain unmarked so that specular reflections would not be curtailed

11. avoid covering moving parts

Marking scheme I employed two hues, fluorescent red-orange and ordinary blue (to provide additional contrast), whereas the other two marking schemes employed only the fluorescent. In the first configuration, the markings were placed on the left and right sides of the fuselage, the top of the fuselage, the topside and underside of each wing, and both sides of the vertical stabilizer. The second configuration repeated the same pattern as the first, except for the omission of the blue centerpiece. Thus, marking scheme II had one-third less area of coverage than marking scheme I.

The marking configurations were altered or adjusted for certain aircraft because of structural obstructions. The empennage on the Jet Falcon received no markings because on this aircraft the horizontal stabilizer divides the vertical section such that it might obliterate viewing the markings. The sides of the fuselage on the Gulfstream were marked on the doors only because of the position of the windows, nacelles, and wings.

The third marking configuration involved a scheme that appeared somewhat like a wraparound. Again, the marked sections of the aircraft were the fuselage, the wings, and the empennage. The wraparound configuration involved the least total area of coverage. The Gulfstream fuselage was not marked in this scheme because of the many separations that would have been necessitated in the marking pattern (e. g., relatively large windows, oil spillage areas, and drift areas). The result would have been a complicated pattern which violates rules 3, 4, 5, 7, 8, and 10 above. The empennage of the Jet Falcon was not marked in marking scheme III for similar reasons.

The total area of coverage of each of these marking schemes is presented in Table 1 and the dimensions of the areas of coverage are presented in Table 2.

Table 1

Area of Coverage, in Square Feet, for Seven Aircraft and Three Marking Schemes

Aircraft	Marking Scheme I	Marking Scheme II	Marking Scheme III
Cessna 172	115.5	76.7	58.0
Beech Baron	152.0	101.3	40.0
Twin Otter	101.4	67.6	36.1
Gulfstream	335.0	222.0	113.0
Jet Falcon	185.5	123.5	63.0
Boeing 737	1318.0	876.0	328.0

Table 2

Dimensions of Areas of Coverage of Three Marking Schemes (Feet)

	Marking Scheme	Fuselage Sides length	Fuselage Sides width	Fuselage Top length	Fuselage Top width	Wing length	Wing width	Vertical Stabilizer a*	Vertical Stabilizer b*	Vertical Stabilizer c*
Cessna 172	I	7.5	1.5	4.0	2.0	9.5	2.0	1.0	2.0	3.0
	II	5.0	1.5	2.5	2.0	6.3	2.0	1.3	8.0	3.0
	III		4.5 × 2.0			6.7	3.0	2.0	2.5	2.0
Piper Comanche	I	6.0	2.0	6.0	2.0	13.0	2.0	1.5	2.5	3.0
	II	4.0	2.0	4.0	2.0	8.7	2.0	1.0	1.7	3.0
	III		7.0 × 2.0			5.0	2.0	1.5	2.5	1.5
Beech Baron	I	5.0	2.0	3.0	2.0	8.0	2.0	1.0	2.3	3.5
	II	3.3	2.0	2.0	2.0	5.3	2.0	0.7	1.5	3.5
	III		5.5 × 2.0			6.0	1.5	2.0	2.8	1.5
Twin-Otter	I	9.0	2.0	15.0	5.0	12.0	3.0	3.0	7.0	8.0
	II	6.0	2.0	10.0	5.0	8.0	3.0	2.0	4.5	8.0
	III		16.0 × 2.0			8.0	3.0	7.0	8.0	3.0
Gulfstream	I	5.0	2.5	18.0	6.0	17.0	5.0	9.0	11.0	10.5
	II	5.0	1.7	12.0	6.0	11.3	5.0	6.0	7.3	10.5
	III		-			12.0	3.0	8.0	10.0	4.0
Jet Falcon	I	5.5	2.0	7.0	2.8	12.0	3.0	-	-	-
	II	3.7	2.0	4.7	2.8	8.0	3.0	-	-	-
	III		14.0 × 2.5			7.0	2.0	-	-	-
Boeing 737	I	50.0	3.0	50.0	9.0	30.0	3.0	3.0	10.0	16.0
	II	33.3	3.0	33.3	9.0	20.0	3.0	2.0	6.5	16.0
	III		35.5 × 4.5			9.0	7.0	5.0	5.5	4.0

a= upper base
b= lower base
c= height

All markings except for the empennage are rectangular. Due to the sloping front edge of the vertical stabilizer, markings in this area are in the form of suitably shaped trapezoids. Various shapes are shown below:

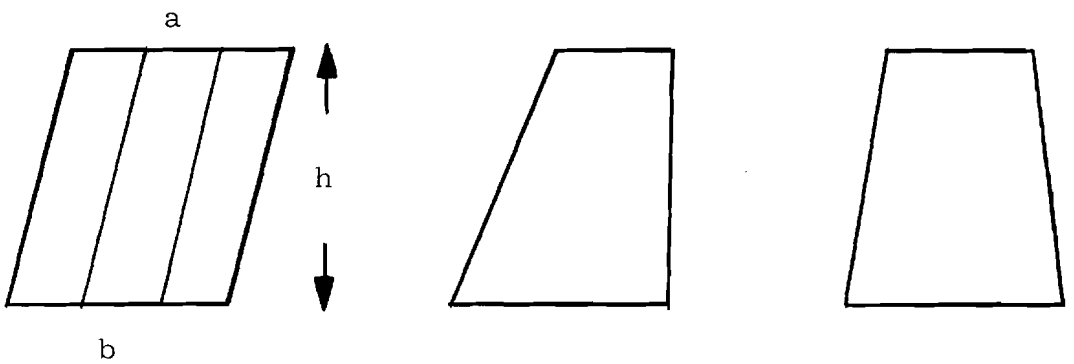

The area of a trapezoid is given by the formula: $a = \frac{1}{2}(a + b)h$. Assuming the same bases (a, b) and the same altitude (h), all three have the same area regardless of shape. In scheme I, the marking is divided vertically into three equal areas, as shown in the first example. This is accomplished by marking off the bases into three equal parts. Rectangles are similarly divided into three equal parts. Thus, the red area is twice the blue area in marking scheme I.

Added Weight

One criterion for any addition to a current aircraft is the weight penalty involved. To this end, the weight of each of the three marking schemes was derived for each of the seven aircraft types. For this purpose, five samples of different brands of pressure sensitive adhesive backed fluorescent film were measured and weighed. The results are given in Table 3. Dividing the difference between the lightest and the heaviest by the square foot weight of the heaviest yields a 30 per cent range difference across brands.

Table 3

Weight Per Unit Area of Five Brands of Pressure Sensitive Adhesive Backed Fluorescent Film

Brand	Weight (pounds per square foot)
A	.066
B	.057
C	.053
D	.049
E	.046

Nonfluorescent blue Scotchcal film, which was used in one of the marking configurations, weighed .025 pounds per square foot. The weighing was done on a chemical balance by first weighing the film with backing and then the backing alone. The difference is then the weight of the film. All samples were rectangular and were measured on a chemical balance to three significant digits. The resulting values of weight per area are easily accurate to two significant digits.

The estimation of paint weight was more difficult, since samples were not as readily available as film samples. Therefore, manufacturers were consulted. The specific quotation given for three mils of fluorescent paint plus 1.5 mils of clear protective lacquer overcoat was 12.3 grams per square foot. This equals .027 pounds per square foot. The weight of 0.5 mil thickness of a white undercoat of paint weighing .0135 (.5) or .00675 pounds per square foot was added to the weight of the fluorescent paint and protective overcoat. Hence, the total weight of fluorescent paint in pounds per square

foot was .034. For polyurethane paint two mils thick with 0.5 mil of primer, the calculated weight was:

$$2(.01) + 0.5(.0135), \text{ or } .02 + .0068 = .027 \text{ pounds per square foot}$$

Table 4 presents the calculated weights for the three different marking schemes by the seven different aircraft types, the three different marking media, and (where appropriate) the heaviest and lightest film (brands A and E respectively of Table 3). On the whole, the fluorescent paint schemes were 24 per cent lighter than the fluorescent film schemes for brand E and 46 per cent lighter for brand A. The fluorescent paint schemes were, in general, 19 per cent heavier than the polyurethane paint schemes. The fluorescent film schemes were 38 per cent heavier than the polyurethane paint schemes for brand E and 56 per cent heavier for brand A.

We note that one-third of the area of scheme I is ordinary blue. Blue film, which weighs less than fluorescent film, was assumed for the film case. Where the scheme I was composed of fluorescent paint, the blue section was assumed to be polyurethane paint.

Finally, we note that although these percentage differences are rather marked, the absolute differences in weight between the marking methods are not extensive (Table 4).

Drag Effects

Above a certain critical average roughness height, k, the skin friction coefficient will be higher than that for "smooth turbulence." The critical value of k is given by 100 divided by the Reynolds number per unit length (Koelle, 1961). Thus, if the Reynolds number per foot is 10^6, the critical value of k is $100/10^6 = 10^{-4}$ feet $= 1.2 \times 10^{-3}$ inches = 1.2 mils. For a Reynolds number/foot of 10^7, this would be .12 mils. The 1.2 mils figure is of the magnitude of the film or paint coat thickness itself. Even for a high Reynolds number of 10^7, the critical value of k is .12 mils. Such roughness would be easily discernible under a simple microscope.

Fluorescent film was so examined and no roughness, even under 300x magnification was evidenced. Accordingly, the roughness is much less than .12 mils. A surface roughness less than .025 mils is easily achievable for a paint surface according to various manufacturers.

Therefore, the coefficient of skin-friction is the same for films as for paint, and no adverse effects due to drag can be anticipated from the use of thin film adhesive materials.

Table 4

Weight of Marking Material (Pounds) for Three Marking Schemes on Seven Aircraft

	Fluorescent Film						Fluorescent Paint			Polyurethane Paint		
	Scheme I		Scheme II		Scheme III		Scheme I	Scheme II	Scheme III	Scheme I	Scheme II	Scheme III
	Brand E	Brand A	Brand E	Brand A	Brand E	Brand A						
Cessna 172	4.5	6.0	3.6	5.1	2.7	3.8	3.6	2.6	2.0	3.1	2.1	1.6
Piper Comanche	5.9	8.0	4.7	6.7	1.8	2.6	4.8	3.4	1.4	4.1	2.7	1.1
Beech Baron	4.0	5.3	3.1	4.5	1.7	2.4	3.2	2.3	1.2	2.7	1.8	1.0
Twin-Otter	13.1	17.5	10.2	14.7	5.2	7.5	10.6	7.6	3.8	9.0	5.9	3.0
Gulfstream	26.6	35.7	20.9	30.0	6.6	9.5	21.6	15.5	4.9	18.3	12.2	3.9
Jet Falcon	7.2	9.7	5.7	8.2	2.9	4.2	5.9	4.2	2.1	5.0	3.3	1.7
Boeing 737	51.4	69.0	40.3	57.8	15.1	21.6	41.7	29.8	11.2	35.7	23.5	8.8

Cost/Utility

Prior to the consideration of any marking material, certainly the cost and utility of the material must be considered. To this point in the present report, comments and opinions of certain manufacturers and users of the pressure sensitive film have been reported. The drag and the added weight of three different marking materials and three marking configurations were considered. The cost and utility concepts are considered next. Cost includes the costs of material, labor, and maintenance for the first year (as well as for the first three years). Utility considers the goals, their importance, and the extent to which each of the marking materials under consideration (i. e., pressure sensitive film, fluorescent paint, and polyurethane paint) meet each of the goals of a marking scheme.

A cost/utility evaluation in the present context is similar to a cost/benefit index, in which the costs and benefits of various alternative courses of action are considered. Typically, the decision maker selects the methods that provides the largest yield at a given cost, or the most benefit for the least cost. Input and output are measured in dollar terms. A cost/utility index may be expressed as the ratio of all costs (material, labor, labor overhead, profit, and maintenance costs) to the utility (extent to which an alternate meets its various goals) of a technique.

Utility

In the case of an aircraft marking scheme, utility may be defined by the importance of each of the goals and the extent to which the marking scheme meets the goals. The goals for a paint scheme, established at the outset of the present study, were: ease of installation, life, minimum maintenance problems/requirements, and minimum costs. In order to establish the importance of each goal, the participants in the user interviews were asked to pair compare the importance of each goal for aircraft marking purposes (see Appendix 1, item 29).

The paired comparison data were treated as described by Edwards (1957). After determining the proportion of the responses which judged each goal as more important than the other goals, scale values were derived in z score form. These z scores are standard scores and normalize across goals. Finally, a constant (.3281) was added to each scale value so that they would all be greater than zero. The addition of the constant does not change the distance between any of the scale values, nor does it alter the relative location of a scale value on the importance continuum. The constant was equal to .0001 more than largest negative scale value. Higher scale values indicate a judgment of greater goal importance. Table 5 indicates the scale values so calculated for each goal.

Table 5

Scale Value of the Importance of Marking Scheme Goals

Goal	Scale Value
Life expectancy	.7371
Minimum maintenance problems/requirements	.3311
Minimum costs	.2411
Ease of installation	.0001

Life expectancy was indicated by greater than a 2 to 1 ratio over its closest competitor to be the most important goal for an aircraft marking. The importance of this goal is followed by maintenance, costs, and finally by ease of installation.

An internal consistency check was applied to the paired comparison data to determine how reliable each judge was in making his paired comparison judgments. Inconsistencies in paired comparison judgments are indicated by circular triads. An example of a circular triad would be as follows: goal 1 is judged more important than goal 2; goal 2 is judged more important than goal 3; goal 3, however, is judged more important than goal 1. If the judge was completely consistent in his judgments, goal 1 would have been judged as more important than goal 3. Since goal 3 was judged more important than goal 1, the judge was inconsistent and a circular triad occurred. The greater the number of circular triads, the more inconsistent the judge in making the estimates.

Kendall's coefficients of consistence (Edwards, 1957) were calculated. The coefficient can vary from zero to one, with zero representing the complete absence of circular triads. The results indicated 12 of the 19 interviewees to have perfect (1.00) coefficients of consistence. For the remaining seven, the values ranged from zero to 0.5. The inconsistencies could have been due to an indifference to making careful judgments, the difficulty in separating very close goals (i.e., close on the continuum of importance), or to a personality factor which predisposes one to being inconsistent regardless of the task on which they are involved.

In addition to the importance of each goal, the utility concept includes an evaluation of the extent to which a method (in this case, each of the three marking materials--fluorescent film, fluorescent paint, and polyurethane paint) meets its goal. These evaluations were made through the magnitude estimation method on a scale of zero to 100 (Appendix 2, items 34, 35, and 36). Table 6 presents the mean values of the judgments of how well each marking scheme meets each goal.

Table 6

Mean Value for the Extent to Which Three Marking Materials Meet Marking Scheme Goals

Goal	Fluorescent Film	Fluorescent Paint	Polyurethane Paint
Ease of installation	85	40	57
Life expectancy	40	33	78
Minimum maintenance problems/requirements	50	50	67
Minimum costs	23	48	51

Fluorescent film was judged as the easiest of the three materials to apply. However, it was judged as the most costly of the three. Fluorescent film and paint were judged as equivalent in terms of maintenance problems and requirements; but, both were judged lower than polyurethane paint on the maintenance goal. Polyurethane paint was judged most favorably on the life expectancy goal.

To derive the utility value (the denominator in the cost/utility index) for each marking material, a vector multiplication was performed on the data in Tables 5 and 6 for each marking scheme. The final utility values for each marking material are as follows:

Polyurethane paint	91.9793
Fluorescent paint	52.4561
Fluorescent film	51.5928

As noted earlier, many of the interviewees had no experience with the fluorescent film that is being manufactured today. Technological innovations have improved the life expectancy of the fluorescent hues and the bonding qualities of the adhesive backing. It is expected that the utility value for fluorescent film would be somewhat upgraded if the interviewees had experience with more recent fluorescent film. However, since estimates for the utility value which would be obtained in this circumstance would be haphazard, the value reported above was used in all subsequent evaluations of the cost/utility for fluorescent film.

Cost

To derive the cost numerator of the cost/utility index, costs based on estimates of material (exclusive of tools), labor + overhead + profit (assuming that aircraft marking is performed by an outside organization), and maintenance costs for one year were derived. Separate cost estimates were developed for each of the three marking materials when applied to each of the seven aircraft in each of three marking configurations developed and described earlier. Examples of the procedure used appear in Tables 7, 8, and 9. The illustrative cost estimates in the tables were developed for the Cessna 172. These estimates will be used in arriving at cost estimates for marking the other aircraft.

Table 7

Cost Estimates for Marking Cessna 172 with Pressure Sensitive Adhesive Backed Film for Three Marking Schemes

	Marking Scheme I	Marking Scheme II	Marking Scheme III
Material			
Fluorescent film @ 45¢ per square foot	$34.65	$34.52	$26.19
Ordinary film @ 30¢ per square foot	11.55		
Edge sealer @ 3.4¢ per square foot	.22	.15	.10
Material cost	$46.42	$34.67	$26.29
Labor			
Direct labor @ $8.00 per hour	$55.52	$36.72	$27.94
Overhead @ 100% of labor	55.52	36.72	29.94
Profit @ 1/3 labor and overhead	37.01	24.48	18.63
Labor cost	$148.05	$97.92	$74.51
Maintenance*			
Direct labor @ $8.00	$36.96	$24.56	$18.64
Overhead @ 100% of personnel	36.96	24.56	18.64
Profit @ 1/3 labor and overhead	24.64	16.37	12.43
Maintenance cost	$98.56	$65.49	$49.71
Total cost	$293.03	$198.08	$150.51

**cost per year*

Table 8

Cost Estimates for Marking Cessna 172 with Fluorescent (and Polyurethane Paint) for Three Marking Schemes

	Marking Scheme I	Marking Scheme II	Marking Scheme III
Material			
Masking tape @ $3.49 per roll	$10.47	$6.98	$3.49
Etching solution @ $4.69 per gallon	1.81	1.20	.91
Primer (zinc chromate) @ $9.25 per gallon (½ mi.)	.59	-	-
Protective overcoat @ $11.25 per gallon (1½ mi.)	4.34	4.32	3.27
White undercoat @ $7.75 per gallon (½ mi.)	1.00	.99	.75
Fluorescent paint @ $17.25 per gallon (3 mi.)	13.30	13.25	10.05
Polyurethane paint (plus activator) @ $20.06 per gallon (2 mi.)	5.14	-	-
Protective overcoat @ $11.25 per gallon (1½ mi.)	4.34	4.32	3.27
Material cost	$36.65	$26.74	$18.47
Labor			
Direct Labor @ $8.00 per hour	$125.14	$92.00	$69.12
Overhead @ 100% of personnel	125.14	92.00	69.12
Profit @ 1/3 of labor and overhead	83.43	61.33	46.08
Labor cost	$333.71	$245.33	$184.32
Maintenance*			
Direct labor @ $8.00 per hpur	$282.73	$312.96	$237.44
Overhead @ 100% of personnel	282.73	312.96	237.44
Profit @ 1/3 of labor and overhead	188.49	208.64	158.29
Maintenance cost	$753.95	$834.56	$633.17
Total cost	$1124.31	$1106.63	$835.96

**cost per year*

Table 9

Cost Estimates for Marking Cessna 172 with Polyurethane Paint for Three Marking Schemes

	Marking Scheme I	Marking Scheme II	Marking Scheme III
Material			
Masking tape @ $3.49 per roll	$10.47	$6.98	$3.49
Etching solution @ $4.69 per gallon	1.81	1.20	.91
Primer (zinc chromate) @ $9.25 per gallon (½ mi)	1.78	1.18	.90
Polyurethane paint (plus activator) @ $20.06 per gallon (2 mi.)	15.44	10.28	7.78
Material cost	$29.50	$19.64	$13.08
Labor			
Direct labor @ $8.00 per hour	$101.60	$62.72	$51.04
Overhead @ 100% of personnel	101.60	62.72	51.04
Profit @ 1/3 of labor and overhead	67.73	41.81	34.03
Labor cost	$270.93	$167.25	$136.11
Maintenance*			
Direct labor @ $8.00 per hour	$92.40	$61.36	$46.56
Overhead @ 100% of personnel	92.40	61.36	46.56
Profit @ 1/3 labor and overhead	61.60	40.91	31.04
Maintenance cost	$246.40	$163.63	$124.16
Total cost	$546.83	$350.52	$273.35

**cost per year*

Cost of Materials

The prices of the materials were all retail quotations provided by the manufacturers or quotations received from the purchasing agent of an airline user. The following considerations were used in arriving at the costs shown in Tables 7, 8, and 9. The area of coverage of a gallon of paint, sprayed one mil thick on the exterior of aircraft, was estimated at 200 to 400 square feet. An estimate of 300 square feet of coverage per gallon, for one mil of thickness (the mean of the above estimates of coverage), was divided into the square footage involved in each marking scheme. The cost per gallon was multiplied by this fraction to determine the cost for that marking scheme. For example, marking scheme I, on the Cessna 172, has 77 square feet of fluorescent red-orange and 38.5 square feet of polyurethane glossy sea blue (Tables 3 and 4). The fraction of a gallon of fluorescent paint to be used for one mil of thickness is .257 (77/300). The cost is $4.43, at $17.25 per gallon of paint. Since a thickness of three mils is needed, the total cost of fluorescent paint is $13.30 (see Table 8).

Where polyurethane and fluorescent paint were used in combination, as in Table 8, primers, base coats, and protective overcoat costs were determined on the basis of the specific square footage and thickness required. Thus, the cost of the primer was calculated for the area that was covered by polyurethane paint. Similarly, the cost of the white base coat and the overcoat were included in the area covered by fluorescent paint.

Labor Estimates and Costs

Labor time estimates were based on Air Force data developed for covering 122 square feet with fluorescent paint*. The man-hours involved were: six hours to prepare the aircraft shell and 11 hours 45 minutes to apply three coats of fluorescent paint, a white undercoat, and a protective overcoat. The approach to the calculation was the same as that described above, where a proportion of man-hours was developed for each marking scheme (based on the square foot of coverage involved and applied to the estimated cost of labor). An example follows which shows how the labor costs were estimated for marking scheme I of Table 8.

Safety Office, Texas Aviation Industries, Inc., Hondo Air Base, Texas, 1958.

Based on the Air Force data, 705 man-minutes (11 hours 45 minutes) were required to paint 122 square feet with five coats of paint. Thus, an estimate of 141 man-minutes would apply for a single coat of paint. Preparation time does not include the removal of previously applied paint or the time to prepare scaffolds and other ancillary tools and equipment. Preparation time involves the activities of washing, priming, and masking. Since 77 square feet were covered with fluorescent paint (5 separate spray passes) and 38.5 square feet were with polyurethane paint (3 separate spray passes), the man-minutes involved per coat were: 88.97 per coat of fluorescent paint ($\frac{77}{122}$ or .631 x 141 man-minutes per coat) and 44.56 per coat of polyurethane paint ($\frac{38.5}{122}$ or .316 x 141 man-minutes per coat). Thus, five coats of fluorescent paint require 444.85 man-minutes and three coats of polyurethane paint require 133.68 man-minutes. The total labor time is 578.53 man-minutes or 9.64 man-hours. To arrive at the direct labor charge in Table 7, column 1, eight dollars per hour was multiplied by 15.64 hours of labor (six hours to prepare the aircraft plus 9.64 hours painting time).

The labor costs for thin film materials were based on a commercial airline's time estimate for covering 100 square feet of surface with pressure sensitive film. The time estimate indicates one hour preparation time, four hours to apply the film, and one hour to edge seal the film. The direct labor cost of $55.52 for marking scheme I was obtained by multiplying each of the three time estimates by 115.5 per cent (since the area of coverage was 115.5 square feet and the estimate was based on 100 square feet) and applying eight dollars per hour to the sum of the time ($8 x 6.94 man-hours).

Maintenance Costs Estimates

Maintenance costs estimates were based on labor, overhead, and profit. The costs include time for retouching painted areas and replacing small sections of damaged film. Maintenance cost estimates do not include complete overhaul of the marking scheme. Since material costs would be minimal, they were excluded from the maintenance cost estimates. An Air Force estimate indicated that 51 man hours per aircraft were required to maintain fluorescent paint patterns over a one year period (Applied Psychology Corporation, 1961). Es timates of 10 man hours per year for the maintenance of an aircraft with 100 square feet of polyurethane paint and four man-hours per year of maintenance for an aircraft with 100 square feet of pressure sensitive film (fluorescent or ordinary) were provided by an Air Force materials support section. Although an average square foot coverage estimate was not provided for the Air Force aircraft requiring 51 man hours of fluorescent paint maintenance per year, the value of 100 square feet was selected for use.

It should be noted that the maintenance estimates may be somewhat inflated for small civil aircraft. Single engine and twin engine aircraft are not likely to be subjected to the rigorous flying schedules of Air Force aircraft and would not be subject to the same temperature and speed extremes as fast military aircraft.

The maintenance cost estimate in Table 7 was arrived at by first determining the number of man-hours that would be required on the basis of the four hour estimate that had been provided for 100 square feet of coverage. Since 115.5 square feet are covered with pressure sensitive film in marking scheme I, 4.62 man-hours were estimated for maintenance. The direct labor charge, at eight dollars per hour, equals $36.96.

Within Tables 7, 8, and 9, the differences in cost are directly attributable to the amount of square foot coverage. However, across marking materials, the fluorescent paint schemes are the most costly and the fluorescent films are the least costly. According to the cost estimates generated, the fluorescent paint markings for the Cessna 172 are 3.2 times as costly as polyurethane paint markings (as determined for marking schemes II and III, in which there are no polyurethane painted areas). For marking schemes II and III on the Cessna 172, fluorescent paint is more costly than fluorescent film by a factor of 5.6 A comparison of the total costs for polyurethane paint and fluorescent film, for the same marking schemes, indicates that polyurethane paint is almost twice as costly (1.8).

For purposes of developing cost estimates for the other six aircraft, costs per square foot of coverage were extrapolated from Tables 7, 8, and 9. The cost estimates per square foot are presented for each marking scheme and each marking material in Table 10.

Table 10

Cost Estimate Per Square Foot of Coverage Based on Estimates in Tables 7, 8, and 9

Marking Scheme	Polyester Film	Fluorescent Paint	Polyurethane Paint
I	$ 2.54	$ 9.73	$ 4.73
II	2.58	14.43	4.57
III	2.59	14.36	4.70

Table 11 presents the cost for marking each of the aircraft under consideration, with each of the three marking schemes. The values were derived by multiplying the cost per square foot estimate (Table 10) by the total number of square feet to be covered.

Cost/Utility

The cost/utility index was calculated for each marking material by marking scheme for each of the seven aircraft. The cost and utility data, presented above, provided the basis for this calculation. The indices, so derived, are presented in Table 12.

The cost/utility index for the different materials and marking configurations provide a basis for comparison for a given aircraft. A decision maker, in selecting a marking material, would select that material which provided the greatest payoff. The lower the cost/utility index, the greater the payoff. This is so because a high utility value indicates a more desirable relationship between a marking material and its ability to meet the specified goals.

In the present analysis, the three marking materials were not compared from the point of view of conspicuity enhancement. If the decision maker was convinced that fluorescent markings enhance conspicuity, he might choose to employ them if their cost-utility index was not unfavorable by a factor greater than that which he was willing to accept. This factor is in itself subjective and will depend, among other things, on the extent to which the user believes that fluorescent coatings will decrease midair collision potential. In the current analysis, two different fluorescent materials (paint and thin film adhesives) were evaluated to allow a very direct comparison. In comparing fluorescent markings with polyurethane paint, a tradeoff is involved. The decision maker must decide the price he would be willing to pay for increased conspicuity of his aircraft.

The cost-utility indices pertinent to the various materials and schemes within a specific aircraft may be directly compared. For marking scheme I on the Cessna 172 (115.5 square feet of coverage), the three ratios (Table 12) are 5.68, 21.43, and 5.95 for film, fluorescent paint, and polyurethane paint, respectively. A decision maker would not be in a quandry with these ratios relative to negation of the use of the fluorescent paint. However, the choice between the polyurethane paint and the film is more difficult. Here, the conspicuity tradeoff must be considered. If the decision maker valued his life, he would probably cast his vote in favor of the film.

Hence, the recommendation follows that in selecting a marking material, for a one year period, a fluorescent red-orange pressure sensitive, adhesive backed film should be employed.

Table 11

Cost of Marking Aircraft with Three Marking Schemes and Materials

Aircraft	Film			Fluorescent Paint			Polyurethane Paint		
	Marking Scheme I	Marking Scheme II	Marking Scheme III	Marking Scheme I	Marking Scheme II	Marking Scheme III	Marking Scheme I	Marking Scheme II	Marking Scheme III
Piper Comanche	$386.08	$261.35	$103.60	$1478.96	$1461.76	$574.40	$718.96	$462.94	$188.00
Beech Baron	256.54	174.41	93.50	986.62	975.47	518.40	479.62	308.93	169.67
Twin-Otter	850.90	572.76	292.67	3259.55	3203.46	1622.68	1584.55	1014.54	531.10
Gulfstream	1734.82	1173.90	372.96	6645.59	6565.65	2067.84	3230.59	2079.35	676.80
Jet Falcon	471.17	318.63	163.17	1804.92	1782.11	904.68	877.42	564.40	296.10
Boeing 737	3347.72	2260.08	849.52	12824.14	12640.68	4710.08	6234.14	4003.32	1541.60
Cessna 172	293.03	198.08	150.51	1124.31	1106.63	835.96	546.83	350.52	273.35

Table 12

Color/Utility Index for Marking Various Aircraft with Each Marking Scheme and Material

Aircraft	Film			Fluorescent Paint			Polyurethane Paint		
	Marking Scheme I	Marking Scheme II	Marking Scheme III	Marking Scheme I	Marking Scheme II	Marking Scheme III	Marking Scheme I	Marking Scheme II	Marking Scheme III
Cessna 172	5.68	3.84	2.92	21.43	21.10	15.94	5.95	3.81	2.97
Piper Comanche	7.48	5.07	2.01	28.19	27.87	10.95	7.82	5.03	2.04
Beech Baron	4.97	3.32	1.81	18.81	18.60	9.88	5.21	3.36	1.84
Twin-Otter	16.49	11.10	5.67	62.14	61.07	30.93	17.23	11.03	5.77
Gulfstream	33.63	22.75	7.23	126.69	125.16	39.42	35.12	22.61	7.36
Jet Falcon	9.13	6.18	3.16	34.41	33.97	17.25	9.54	6.14	3.22
Boeing 737	64.89	43.81	16.47	244.47	240.98	89.79	67.78	43.52	16.76

The above comparisons of the cost utility indices of fluorescent film and polyurethane paint were based on costs for one year after application. If a potential user was interested in a cost/utility index for each year of the expected life of the marking material, then certain adjustments are required. First, the life expectancy of each material must be factored into consideration. The life expectancy estimates obtained in the field interviews were five years for polyurethane paint and three years for fluorescent film. Next, the estimates of yearly maintenance would be included. Finally, the cost of stripping the aircraft would need to be considered. These added cost values would be included in the numerator of the cost/utility formula.

In the present situation, the cost/utility index for each year of the effective life of fluorescent film and polyurethane paint was determined for the Cessna 172. The cost of stripping the aircraft of the polyurethane paint markings, on the one hand, and the fluorescent film markings, on the other, were assumed to be the same for both materials and therefore was omitted from the estimates. The same dollar value of maintenance for year one was used for each of the subsequent years of effective life, for each marking material. Hence the cost for marking the Cessna 172 with fluorescent film, marking scheme III, for three years was increased from $150.51 to $250.13 (two additional years of maintenance cost at $49.71 per year). The average cost over three years is $83.38 and the cost/utility index per year of effective life is $83.38/51.5928 or 1.62.

Similarly, the cost for five years of polyurethane marking of the same marking scheme and aircraft would increase from $273.35 to $894.15. The average cost over five years is $178.83 and the cost/utility index per year is 1.94. Again, the cost/utility index indicates a slight advantage in the direction of fluorescent film, despite its shorter life expectancy and hence more frequent overhauling.

CHAPTER III

DISCUSSION AND CONCLUSIONS

The data from the field and laboratory studies reviewed support the contention that some gain, in visibility and the concomitant enhancement in conspicuity, might accrue from marking aircraft with fluorescent hues. The effectiveness of fluorescent markings is especially pronounced in the close range situation, such as in and around airports (where almost 100 per cent of the midair collisions/near misses occur). If fluorescent marking can impart midair collision reduction, then its usefulness can be easily supported. However, when the concept of fluorescent marking first became popular, the sole media for application on aircraft was paint. As was demonstrated in the cost analysis of this study, fluorescent paint is quite expensive and has many drawbacks from the point of view of ease of installation, life expectancy, and maintenance.

Many of the problems inherent in the use of fluorescent paint were thought to be alleviated when fluorescent film was introduced for exterior aircraft markings. However, pressure sensitive film presented other problems, not the least of which was a high cost factor. The other problems found in using pressure sensitive film for exterior aircraft marking were covering compound surfaces, rivets, seams, and other protrustions, covering large surfaces areas with a single sheet of film, covering the leading edges of the aircraft (which are subject to the effects of the slipstream), and inadvertent lifting and peeling.

Advances in techniques of application, e. g., the wet method whereby the film is applied to a wet surface, allowing it to be moved and slid into its final position, and in the preparation of the film itself have resolved some of the problems. Perforated film facilitates the application of the film to raised edges and protrustions by allowing the trapped air to escape. Applying strips of film, as opposed to large sheets, aids the technician in covering certain compound surfaces and in the application of the film in general. With the application of edge sealer and the improved binding abilities of the adhesives used on the films, the problem of peeling and lifting has been somewhat reduced.

The weight of pressure sensitive film markings seems to present little, if any, cause for concern. The heaviest and the lightest fluorescent films were examined in terms of three different marking schemes to determine the weight added. In the worst case, six pounds would be added to a Cessna 172 with 115.5 square feet of film markings (77 square feet of fluorescent film and 38.5 square feet of a conventionally colored film), and 69 pounds would be added to the Boeing 737 with 1318 square feet of the same marking material. If the lightest fluorescent film were used to mark the aircraft, the weights would be 4.5 pounds and 51.4 pounds, respectively.

Fluorescent film is the heaviest of the three different marking materials considered. The weight of fluorescent paint and of polyurethane paint was calculated for the same marking schemes as the fluorescent film. The heaviest fluorescent film was calculated to be approximately twice that of the equivalent in fluorescent paint, and two and one-half times as heavy as polyurethane paint. The lightest fluorescent material is approximately one-third heavier than the fluorescent paint of the same area of coverage and approximately seven-tenths heavier than the equivalent polyurethane paint marking.

From the logic employed, no drag effects are anticipated from either the paint (fluorescent or polyurethane) or the pressure sensitive film. Consequently, the addition of thin film marking materials would not require aerodynamic redesign.

A cost analysis of fluorescent film, fluorescent paint, and polyurethane paint indicated that when all variables are considered, namely, cost of material, labor (direct labor, overhead, and profit), and maintenance costs, the cost of the fluorescent film is less than that of the other materials. The cost of applying the fluorescent film markings and maintaining them for one year is almost four times less than the fluorescent paint markings and almost half that of the polyurethane markings. Utility, conceived of as the importance of the goals of: ease of application, life expectancy, minimum maintenance problems/requirements, and costs and weighted by the extent to which each of the three marking materials meet these goals, was used as the denominator in a cost/utility analysis. The cost/utility indices for thin film adhesive materials were consistently lower than those for the other two materials, but were very close to the polyurethane paint indices. The utility of the polyurethane paint was seen as being considerably greater than the utility of fluorescent film by the users of such materials. However, the cost differential was such that the two materials are very close in the cost/utility comparison.

Completely aside from the pragmatic nature of such evaluations, the advantages of fluorescence in enhancing the conspicuity of aircraft must not be overlooked. On balance, when the conspicuity advantages and disadvantages of the fluorescent pressure sensitive film are considered, along with the added weight of marking the aircraft with this material, the absence of any drag effects when using it to mark aircraft, its low relative cost, and its favorable cost/utility position, a contention favoring the use of this material seems supportable.

In summary, the advantages and disadvantages of the three marking materials are listed below:

Pressure Sensitive Fluorescent Film

Advantages

- Low relative cost
- No additional drag effects
- Acceptable addition of weight for reasonably sized marking schemes
- Ease of application
- Minimum surface preparation of aircraft
- No masking of unmarked areas
- No drying time
- Ability to apply several colors simultaneously
- Shapes and patterns can be precut by die
- Intricately die cut shapes can be premasked so that even spacing and positioning can be maintained
- Uniform thickness of fluorescent coating can be achieved, resulting in even fading
- Can be removed for repositioning or realigning if necessary
- Ease of patching damaged sections
- Cleaning ease
- No deleterious toxic effects to person performing application

Disadvantages

- Some application skill required
- Difficulty in covering compound surfaces and rivets, seams, and other protrusions
- Easily damaged when used on leading edges
- Difficulty in applying large sheets of the film at one time
- Relatively short life of fluorescent pigments
- Conceals areas of corrosion
- Will be destroyed if applied in exhaust area

- Cannot be applied in temperatures below 50°
- Will be destroyed by certain solvents found in hydraulic fluids and engine oils

Fluorescent Paint

Advantages

- No drag effects
- Acceptable addition of weight for reasonably sized markings
- Can be applied under most temperature conditions
- Cleaning ease
- Easily applied to compound surfaces and over rivets, seams, and other protrusions
- Does not conceal corroded areas
- Sufficiently withstands being damaged when on leading edges

Disadvantages

- Costly
- Requires considerable surface preparation
- Requires application skill
- Areas around surface to be painted must be masked
- Only one hue can be applied at a time
- Drying time between coats
- Painting intricate patterns and shapes is difficult
- Obtaining a uniform thickness of color coat over the painted surface is difficult
- Difficult to correct overpasses and errors in paint application
- Difficult to match faded paint or damaged sections
- Will be damaged in exhaust areas
- Will be destroyed by certain solvents found in hydraulic fluids and engine oils
- Excessive maintenance requirements
- Relatively short life span of fluorescent pigments

Polyurethane Paint

Advantages

- Low relative cost
- No drag effects
- Acceptable addition of weight for reasonably sized marking schemes
- Can be applied under most temperature conditions
- Cleaning ease
- Withstands many of the solvents found in hydraulic fluids and engine oils
- Long life expectancy
- Reasonable amount of maintenance
- Easy to apply to compound surfaces and over rivets, seams, and other protrusions
- Does not conceal corroded areas
- Sufficiently rugged on leading edges
- High durability

Disadvantages

- Extremely toxic to person applying it
- Requires considerable surface preparation
- Requires skilled painter
- Must mask areas around surface to be painted
- Can apply only one hue at a time
- Drying time between coats must be allowed
- Painting intricate patterns and shapes is difficult
- Difficult to correct overpasses and errors in paint application
- Difficult to match paint in damaged areas
- Will be damaged in exhaust areas

REFERENCES

Aeroflot's "secret" CAS. *Air Line Pilot, 40,* 3, p. 32, March 1971.

Aircraft flight attitude information as indicated by exterior paint patterns. Arlington, Va.: Applied Psychology Corporation, 1961. (a)

American Airlines. *Materials process specifications manual: Decal application.* June 1971.

Analysis of the usefulness of coded information in visual collision avoidance. Arlington, Va.: Applied Psychology Corporation, 1961. (b)

Blackwell, H.R. *Visibility assessment of gray and chromatic paints by a new technique.* Washington, D.C.: U.S. Coast Guard, 1960.

Crain, K. & Siegel, A.I. *Aircraft detectability and visibility. II. Tachistoscopic thresholds for fluorescent and ordinary paints.* Philadelphia, Pa.: Naval Air Material Center, NAMC-ACEL-, 1960.

Edwards, A.L. *Techniques of attitude scale construction.* New York: Appleton-Century-Crofts, Inc. 1970.

Federal Aviation Administration. Pilots' role in collision avoidance. AC No. 90-48, March 1970.

Federal Aviation Administration. *Near Midair Collision Report of 1968.* July 1969.

Federman, P.J. & Siegel, A.I. *Aircraft detectability and visibility: V. Decetectability of stimuli coated with fluorescent and ordinary paints, a further study.* Philadelphia, Pa.: Naval Air Material Center, NAMC-ACEL-470, 1962.

Field study of detectability of colored targets at sea. New London: U.S. Navy Medical Research Laboratory, 1955.

Hanson, D.R. & Dickson, A.D. *Significant visual properties of some fluoresent pigments.* Minneapolis: Minnesota Mining and Manufacturing Company, L-FLUOR (34.05) R.

Koelle, H.A. (Ed.) *Handbook of Astronautical engineering.* New York: McGraw-Hill, 1961.

Kulp, C.M. & Rowland, G.E. *Daylight visual target detection (a search and review of the literature).* Haddonfield, N.J.: Rowland & Company, 1959.

Midair collision avoidance. *Approach, 17(4),* pp. 28-29, October 1971.

Military Specification, MIL-P-38477A (USAF). *Plastic material, pressure sensitive adhesive, for aerospace identification and marking.* August, 1973.

Rowland, G.E. & Silver, C.A. *Aircraft exterior lighting and marking.* Atlantic City: Department of Transportation, Federal Aviation Administration, FAA-RD-72-24, May 1972.

Siegel, A.I. & Crain, K. *Aircraft detectability and visibility: I. Visual fields for fluorescent and ordinary paints.* Philadelphia, Pa.: Naval Air Material Center, NAMC-ACEL-440, 1960.

Siegel, A.I. & Crain, K. *Aircraft detectability and visibility: III. The effects of varying stimulus characteristics on tachistoscopic thresholds.* Philadelphia, Pa.: Naval Air Material Center, NAMC-ACEL-452, 1961.

Siegel, A.I. *Aircraft detectability and visibility: IV. Detectability of stimuli painted with fluorescent and ordinary paints when viewed against clear and cloudy sky backgrounds.* Philadelphia, Pa.: Naval Air Material Center, NAMC-ACEL-460, 1961.

Siegel, A.I. & Lanterman, R.S. *Aircraft detectability and visibility: VI. A qualitative review and analysis of the visibility of fluorescent paint for increasing aircraft detectability and conspicuity.* Wayne, Pa.: Applied Psychological Services, 1963.

Siegel, A.I. & Federman, P.J. Development of a paint scheme for increasing aircraft visibility. *Journal of Applied Psychology,* 1965, *49,* 93-105.

Siegel, A.I. & Lanterman, R.S. *Conspicuity of fluorescent and non-fluorescent stimuli.* Philadelphia, Pa.: Naval Air Engineering Center, NAEC-ACEL-537, 1966.

Smith, C.L. The midair nightmare. *Air Line Pilot, 40,* 3, p. 32, March 1972.

Switzer Brothers, Inc. Daylight fluorescent pigments. *Technical Bulletin,* No. 1115.

The role of paint in mid-air collision prevention. Arlington, Va.: Applied Psychology Corporation, 1961. (a)

Townsend, L. ATC's system errors spotlighted. *AOPA Pilot, 12,* 10. pp. 29-32, October 1969.

Woo, J.C. *System study, design, test and evaluation of concepts for marking of low visibility aviation obstructions.* Cambridge, Mass.: Mt. Auburn Research Associates, Inc., 1968.

APPENDIX

1. Questionnaire form used during survey of thin-film fluorescent material--Users

2. Questionnaire form used during survey of thin-film fluorescent material--Manufacturers

SURVEY OF THIN-FILM FLUORESCENT MATERIAL

Users

prepared by

Applied Psychological Services, Inc.
Science Center
Wayne, Pa.

for

Federal Aviation Administration
Washington, D.C.

under Contract

DOT-FA73WA-3320

My name is_____. I represent Applied Psychological Services. We are under contract with the Federal Aviation Administration to perform a survey of thin-film fluorescent and similar materials for use on aircraft. Individuals in various departments of users of these materials are being interviewed to obtain information relative to the ease and/or difficulty of using the materials. In particular, we are interested in installation, life expectancy, maintenance, and costs.

1. Do you have any experience with thin-film fluorescent material for aircraft marking purposes?

2. (IF NO,ASK) Do you have any experience with the use of other pressure sensitive or adhesive backed thin-film material for this purpose?

3. (IF YES, ASK) What material?

RELATE REMAINDER OF INTERVIEW TO THE MATERIAL WITH WHICH THE RESPONDENT HAS EXPERIENCE.

4. What do you think the three greatest advantages of this material are for use in marking aircraft?

5. What are the greatest disadvantages of this material for use in marking aircraft?

6. What are the two greatest advantages that can be derived form using this material, as far as installation or application is concerned?

7. What are the two greatest disadvantages of this material, as far as installation or application is concerned?

8. Can you suggest a solution to the problem of_____and_____?

9. What are the two greatest advantages of this material so far as maintenance is concerned?

10. What are the two greatest disadvatages of this material as far as maintenance is concerned?

11. Can you suggest a solution to the problems of_____and_____?

12. Can you give me the life expectancy (in months) for fluorescent red/orange and fluorescent yellow/green thin-film fluorescent (or "this material") material, under the following climatic conditions: ___ ___ ___ ___?

Consider that the marking material is on non-moveable structures and on aircraft that spend approximately 15 hours in daylight flights per month.

13. How would these estimates vary for moveable structures, or areas that are subject to high laminar flow?

14. What is the average retail cost of this material?

In completing the chart, work down each column by comparing goal 1 with goal 2, then 3, then goal 4. Continue the process until the chart is completed.

30. Would the goal importance evaluations change for a very simple marking scheme (i.e., a very simple pattern with minimum coverage on fairly uniform or non-contoured surfaces)?

31. (IF YES, HAND RESPONSE SHEET TO INTERVIEWEE) Repeat the same type of comparisons, but for very simple marking schemes.

32. Would the original goal importance (#30) change for a complex marking scheme (i.e., a very complicated pattern with extensive coverage over contoured surfaces)?

33. (IF YES, HAND RESPONSE SHEET TO INTERVIEWEE) Repeat the same type of comparisons, but for complex marking schemes.

34. (HAND INTERVIEWEE CARD) Please rate thin-film fluorescent material for the for the extent to which it meets the ease of installation goal; the life expectancy goal; the minimum maintenance problems and requirements goal; the minimum cost goal.

35. (HAND INTERVIEWEE CARD) Please rate conventional thin-film material for the extent to which it meets the ease of installation goal; the life expectancy goal; the minimum maintenance problems and requirements goal; the minimum cost goal.

36. (HAND INTERVIEWEE CARD) Please rate fluorescent paint for the extent to which it meets the ease of installation goal; life expectancy goal; the minimum maintenance problems and requirements goal; the minimum costs goal.

37. (HAND INTERVIEWEE CARD) Please rate ordinary paint (polyurethane) for the extent to which it meets the ease of installation goal; the life expectancy goal; the minimum maintenance problems and requirements goal; the minimum costs goal.

(Vary order of presentation)

SURVEY OF THIN-FILM FLUORESCENT MATERIAL

Manufacturers

prepared by

Applied Psychological Services, Inc.
Science Center
Wayne, Pa.

for

Federal Aviation Administration
Washington, D.C.

under Contract

DOT-FA73WA-3320

Mr name is_____. I represent Applied Psychological Services. We are under contract with the Federal Aviation Administration to perform a survey of thin-film fluorescent material for use in marking aircraft. Individuals in various departments of manufacturers are being interviewed to obtain information relative to the case and/or difficulty of using the material. In particular, we are interested in installation, life expectancy, maintenance, and costs.

1. What do you think the three greatest advantages of thin-film fluorescent material are for use in marking aircraft?

2. What are the three greatest disadvantages of thin-film fluorescent material for use in marking aircraft?

3. What are the two greatest advantages that can be derived from using thin-film fluorescent material, as far as installation is concerned?

4. What are the two greatest disadvantages of thin-film fluorescent materials, as far as installation is concerned?

5. Can you suggest a solution to the problem of_____ and_____?

6. What are the two greatest advantages of thin-film fluorescents, so far as maintenance is concerned?

7. What are the two greatest disadvantages of thin-film fluorescents, as far as maintenace is concerned?

8. Can you suggest a solution to the problem of _____ and_____?

9. Can you give me the life expectancy (in months) for fluorescent red/orange and fluorescent yellow/green thin-film fluorescent material, under the following climatic conditions: ___ ___ ___

   Consider that the marking material is on non-moveable structures and on aircraft that spend approximately 15 hours in daylight flights per month.

10. How would these estimates vary for moveable structures, or areas that are subject to high laminar flow?

11. What is the average retail cost of thin-film fluorescent material?

12. What are the problems, if any, that are involved in manufacturing thin-film fluorescent material for use on aircraft?

13. Can you tell me about any progress that has been made, or is anticipated, in terms of solving some of the existing problems involved in the installation of the thin-film fluorescent materials.

14. Can you tell me about any progress that may have been made, or is anticipated, in maintaining thin-film fluorescent material on aircraft?

15. What one improvement would help the utilization of thin-film fluorescent material, for marking aircraft, the most?

16. What problems, if any, are involved in marking aircraft?

17. Which aspects, or qualities, of thin-film fluorescent material do users of the material like best?

18. Why so?

19. What are the three most prevalent complaints that users make about the material for use in marking aircraft?

20. Is the feedback from the users utilized in the modification of your product?

21. (If YES, ASK) How so?

22. Are there other materials similar to thin-film fluorescents that can be used for enhancing aircraft conspicuity?

23. (If YES, ASK) What are they?

24. (If YES, THEN REPEAT ITEMS 1-24 AS THEY APPLY TO THE OTHER MATERIAL(S)).

25. May I have a list of some users of thin-film fluorescent material, e.g., civil flying organizations, commercial flying organizations, airport? In particular, we would like to locate users in the general areas of Boston, Philadelphia, Florida, New Mexico - Arizona - Nevada, and Montreal.

26. Do you have any specs, sales literature, laboratory reports, or other data that I may have?

27. Will the altitude at which aircraft typically fly affect the life expectancy of thin-film fluorescent material differentially?

28. (If YES,ASK) What would the life expectancy be for light aircraft flying under 10,000 feet or heavy aircraft flying over 25,000 feet?