COPY 1

Report No. FAA-RD-75-210

INVESTIGATION OF EFFECTS OF GROUND-PLANE DEEP SNOW COVER ON IMAGE GLIDE SLOPE 1974-1975

RICHARD H. MCFARLAND

NAFEC
LIBRARY
AUG 16 '76

AUGUST 1975

FINAL REPORT

Document is available to the public through the
National Technical Information Service,
Springfield, Virginia 22161.

Prepared for

U.S. DEPARTMENT OF TRANSPORTATION
FEDERAL AVIATION ADMINISTRATION
Systems Research & Development Service
Washington, D.C. 20590

NOTICE

This document is disseminated under the sponsorship of the Department of Transportation in the interest of information exchange. The United States Government assumes no liability for its contents or use thereof.

TECHNICAL REPORT STANDARD TITLE PAGE

1. Report No.	2. Government Accession No.	3. Recipient's Catalog No.
FAA-RD-75-210		

4. Title and Subtitle	5. Report Date
INVESTIGATION OF EFFECTS OF GROUND-PLANE DEEP SNOW COVER ON IMAGE GLIDE SLOPE 1974-75	August, 1975
	6. Performing Organization Code
7. Author(s) Richard H. McFarland	8. Performing Organization Report No. EER 24-1
9. Performing Organization Name and Address Avionics Engineering Center Department of Electrical Engineering Ohio University Athens, Ohio 45701	10. Work Unit No.
	11. Contract or Grant No. DOT FA75WA-3581
12. Sponsoring Agency Name and Address U. S. Department of Transportation Federal Aviation Administration Systems Research and Development Service Washington, D. C. 20590	13. Type of Report and Period Covered Final Report November, 1974-August, 1975
	14. Sponsoring Agency Code

15. Supplementary Notes

16. Abstract

Results of the tenth consecutive year of data collection concerning snow effects on operation of image glide-slope systems are presented. Evidence continues to show that with snow on the reflecting ground plane, the far-field glide slope does not lower; rather it tends to rise approximately one-tenth of one degree elevation per one foot depth of snow. Further, the conventional near-field, 180° point monitor response does not correlate with far-field path performance when snow covers the ground. A two-frequency, capture-type far-field monitor was tested. Conditions surrounding the collection of data on snow effects are severe enough to produce considerable noise in the data, and this prevents correlations that do exist from appearing in an elegant form.

At sites where deep snows exist, high snow banks accumulate alongside the runway, which affect the path angle and structure just beyond the runway threshold.

Data for this report were obtained from Michigan Technological University staff working at a special site at Houghton County Memorial Airport in Michigan, the NAFEC staff who flew two special missions into Michigan and Minnesota during the periods of deepest snows, and the several crews of North Central Airlines who made observations on glide-path performance during these periods of deep snows.

17. Key Words	18. Distribution Statement
image glide slope, snow, ground plane, 180° monitor, capture monitor, far field, snow banks, snow plow, snow blower, pilots' reports, glide path performance, path angle, path width, data correlation	Document is available to the public through the National Technical Information Service, Springfield, Virginia 22161.

19. Security Classif. (of this report)	20. Security Classif. (of this page)	21. No. of Pages	22. Price
Unclassified	Unclassified	32	

Form DOT F 1700.7 (8-69)

METRIC CONVERSION FACTORS

Approximate Conversions to Metric Measures

Symbol	When You Know	Multiply by	To Find	Symbol
		LENGTH		
in	inches	*2.5	centimeters	cm
ft	feet	30	centimeters	cm
yd	yards	0.9	meters	m
mi	miles	1.6	kilometers	km
		AREA		
in^2	square inches	6.5	square centimeters	cm^2
ft^2	square feet	0.09	square meters	m^2
yd^2	square yards	0.8	square meters	m^2
mi^2	square miles	2.6	square kilometers	km^2
	acres	0.4	hectares	ha
		MASS (weight)		
oz	ounces	28	grams	g
lb	pounds	0.45	kilograms	kg
	short tons (2000 lb)	0.9	tonnes	t
		VOLUME		
tsp	teaspoons	5	milliliters	ml
Tbsp	tablespoons	15	milliliters	ml
fl oz	fluid ounces	30	milliliters	ml
c	cups	0.24	liters	l
pt	pints	0.47	liters	l
qt	quarts	0.95	liters	l
gal	gallons	3.8	liters	l
ft^3	cubic feet	0.03	cubic meters	m^3
yd^3	cubic yards	0.76	cubic meters	m^3
		TEMPERATURE (exact)		
°F	Fahrenheit temperature	5/9 (after subtracting 32)	Celsius temperature	°C

*1 in = 2.54 (exactly). For other exact conversions and more detailed tables, see NBS Misc. Publ. 286, Units of Weights and Measures, Price $2.25, SD Catalog No. C13.10:286.

Approximate Conversions from Metric Measures

Symbol	When You Know	Multiply by	To Find	Symbol
		LENGTH		
mm	millimeters	0.04	inches	in
cm	centimeters	0.4	inches	in
m	meters	3.3	feet	ft
m	meters	1.1	yards	yd
km	kilometers	0.6	miles	mi
		AREA		
cm^2	square centimeters	0.16	square inches	in^2
m^2	square meters	1.2	square yards	yd^2
km^2	square kilometers	0.4	square miles	mi^2
ha	hectares (10,000 m^2)	2.5	acres	
		MASS (weight)		
g	grams	0.035	ounces	oz
kg	kilograms	2.2	pounds	lb
t	tonnes (1000 kg)	1.1	short tons	
		VOLUME		
ml	milliliters	0.03	fluid ounces	fl oz
l	liters	2.1	pints	pt
l	liters	1.06	quarts	qt
l	liters	0.26	gallons	gal
m^3	cubic meters	35	cubic feet	ft^3
m^3	cubic meters	1.3	cubic yards	yd^3
		TEMPERATURE (exact)		
°C	Celsius temperature	9/5 (then add 32)	Fahrenheit temperature	°F

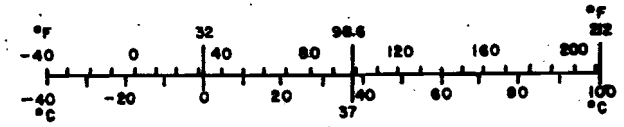

TABLE OF CONTENTS

		PAGE
	List of Figures	i
	List of Tables	iii
I.	SUMMARY AND CONCLUSIONS	1
II.	INTRODUCTION	2
III.	HOUGHTON, MICHIGAN MEASUREMENTS	2
IV.	NORTH CENTRAL AIRLINES DATA	10
V.	NAFEC FLIGHT MEASUREMENTS	14
VI.	GLIDE-SLOPE CAPTURE MONITOR	14
VII.	INVESTIGATORS AND ACKNOWLEDGEMENTS	24
VIII.	REFERENCES AND BIBLIOGRAPHY	24
IX.	APPENDICES	26
	A. Snow Data Collected at Houghton, Michigan, December 1974 - May 1975.	26
	B. Schematic Diagrams	31

LIST OF FIGURES

Figure 1.	Layout of Site at Houghton, Michigan.	3
Figure 2.	Glide-Slope Angle versus Reflection Zone Snow Depth - Flight Data - Houghton County Memorial Airport - Winter, 1974-75.	4
Figure 3.	View of the Reflection Zone Serving the Null Reference Glide Slope at Houghton County Memorial Airport, Houghton, Michigan.	5

PAGE

Figure 4.	Snow Blowers in Action Clearing the Houghton Site Near the 180° Course Monitor Mast.	6
Figure 5.	Snow Blower in Process of Moving a Portion of the Snow Bank That Has Accumulated in the Reflection Zone on the Farthest Side from the Runway.	7
Figure 6.	Aerial View of Plowed Area in Front of the Glide Slope at Houghton County Memorial Airport.	8
Figure 7.	Theodolite Location in Front of the Glide Slope Transmitting Antennas.	9
Figure 8.	Glide-Slope Angle versus Snow Bank Depth - Tower Data - Houghton County Memorial Airport - Winter, 1974-75.	11
Figure 9.	Glide-Slope Angle versus Reflection Zone Snow Depth - Tower Data - Houghton County Memorial Airport - Winter, 1974-75.	11
Figure 10.	Photograph of Clark Tower Used to Measure Glide-Path Parameters in the Space Directly Over the Runway Threshold at Houghton County Memorial Airport.	12
Figure 11.	Probe Antenna Shown Mounted on the 1200-Foot Light Bar at the Houghton Airport.	15
Figure 12.	Houghton, Michigan Capture Monitor Implementation.	16
Figure 13.	Ground Plane Profile Along a Line from G/S Mast to Monitor Mast.	18
Figure 14.	Phase-Locked Loop 90 Hz Generator Block Diagram.	19
Figure 15.	RF Amplitude Control and Linear Modulator Circuit Block Diagram.	20
Figure 16.	Stabilized Capture Generator with RF Amplitude Control and Linear Modulator Circuitry.	21
Figure 17.	Far-Field Capture Monitor Indications versus Glide-Slope Angle.	23

PAGE

Figure B-1. RF Amplitude Control and Linear Modulator Circuit Schematic Diagram. 31

Figure B-2. Phase-Locked Loop 90 Hz Generator Schematic Diagram. 32

LIST OF TABLES

Table 1. Summary of Snow Data Taken by FAA NAFEC Staff Using Heavy Aircraft. 13

Table 2. Input - Output Data for Stabilized Capture Generator. 22

I. SUMMARY AND CONCLUSIONS

This report provides the most recently available factual data concerning the operation of image glide slope systems when the reflecting planes are covered with snow. It is to meet the requirements of Contract DOT-FA75WA-3581 which had as principal tasks the collection of information on deep snow effects. The work and contents of this document are written as a sequel to the reports FAA-RD-74-69 Volumes 1 and 2.

Because of the need for efficient acquisition of glide slope snow data from a northern United States site, expert help was obtained from personnel at Michigan Technological University at Houghton, Michigan. Much of the data presented in this report is their contribution. A summary of the results of analysis of this data and some other collected by FAA NAFEC personnel, North Central Airlines, and Ohio University staff follows. In addition, this report includes a description of the far-field, two-frequency capture monitor.

1. No evidence exists that the far-field glide slope angle lowers with snow cover. The path is observed to increase in angle approximately 0.1 degree for each foot of snow on the ground.

2. The response of the typical 180° point near-field monitor is essentially uncorrelated with far-field path response to snow cover.

3. Integral monitoring as evidenced from width monitoring appears to be the most effective single means of measuring glide-slope facility performance during periods of ground plane snow cover; however, it cannot be considered to give complete monitoring.

4. Man-made disturbances in snow cover such as discrete plowed areas, and associated snow banks can produce significant effects in system performance, e.g., roughness of the path approaching the threshold.

5. Most far-field, snow effects are within observational error produced with adverse environmental conditions (snow and cold) and certainly within uncorrected altimetry such as air carriers might observe; hence it should not be disturbing that elegant, linear relationships are not observed with field data. Care must be taken so as not to draw a conclusion based on a single reported observation for there are many sources of error.

6. The far-field, capture-type monitor which was field tested for the first time at Houghton this season gave encouraging results. This monitor holds promise of providing useful information concerning the effects of ground plane snow cover, in particular the change in effective elevation of the ground plane, which is known to affect the far-field path angle. Further, this monitor appears to have value as a maintenance tool.

7. All information obtained during this season of data collection, which is the most extensive ever, continues to support previous conclusions [1] concerning snow effects on image glide slopes. No adverse effects are produced with snow depths even up to two feet, and greater if nominal angles are near 2.5 degrees. The most noticeable effect is the increase of angle with increase in depth of snow layer.

8. The practice of shutting down or restricting glide-slope facilities in the absence of plowing when two feet or less of snow exist is archaic and cannot be defended on the basis of 10 years of snow data that has been accumulated. Current glide-slope monitoring is inadequate in the sense that many times it restricts the use of an in-tolerance glide slope when guidance is most needed.

II. INTRODUCTION

The objective of this project, as with preceding snow measurement projects, has been to obtain information concerning the effect on the glide slope in space caused by snow accumulation on the glide-slope reflecting plane. To accomplish this objective three independent efforts were conducted. First, and most extensive, was the task performed under subcontract at Houghton, Michigan by Michigan Technological University staff. This work involved collection of data using a portable tower erected at the runway threshold and using an aircraft specially equipped and tracked with a theodolite. A NAFEC team utilizing FAA aircraft made two special sorties into Minnesota to collect flight data at sites where plowing had not been accomplished and large snow accumulations existed. Finally, North Central Airlines pilots cooperated in data collection by reporting their observations of glide-slope facilities where deep snow covers were known to exist.

III. HOUGHTON, MICHIGAN MEASUREMENTS

Data collection at Houghton made use of the commissioned ILS facilities in existence there for the third winter season. Reference data for the facility is:

Frequency: 335.0 MHz

Commissioned Path Angle: 2.50°; width 0.7°

Wilcox Solid State Transmitter System Model Mark IA

180° point course monitor skewed away from the runway for a distance of approximately 290 feet from transmitting antennas

ILS Minima: 200 foot ceiling, ½ mile visibility.

Figure 1 shows the layout of the site with the important dimensions identified.

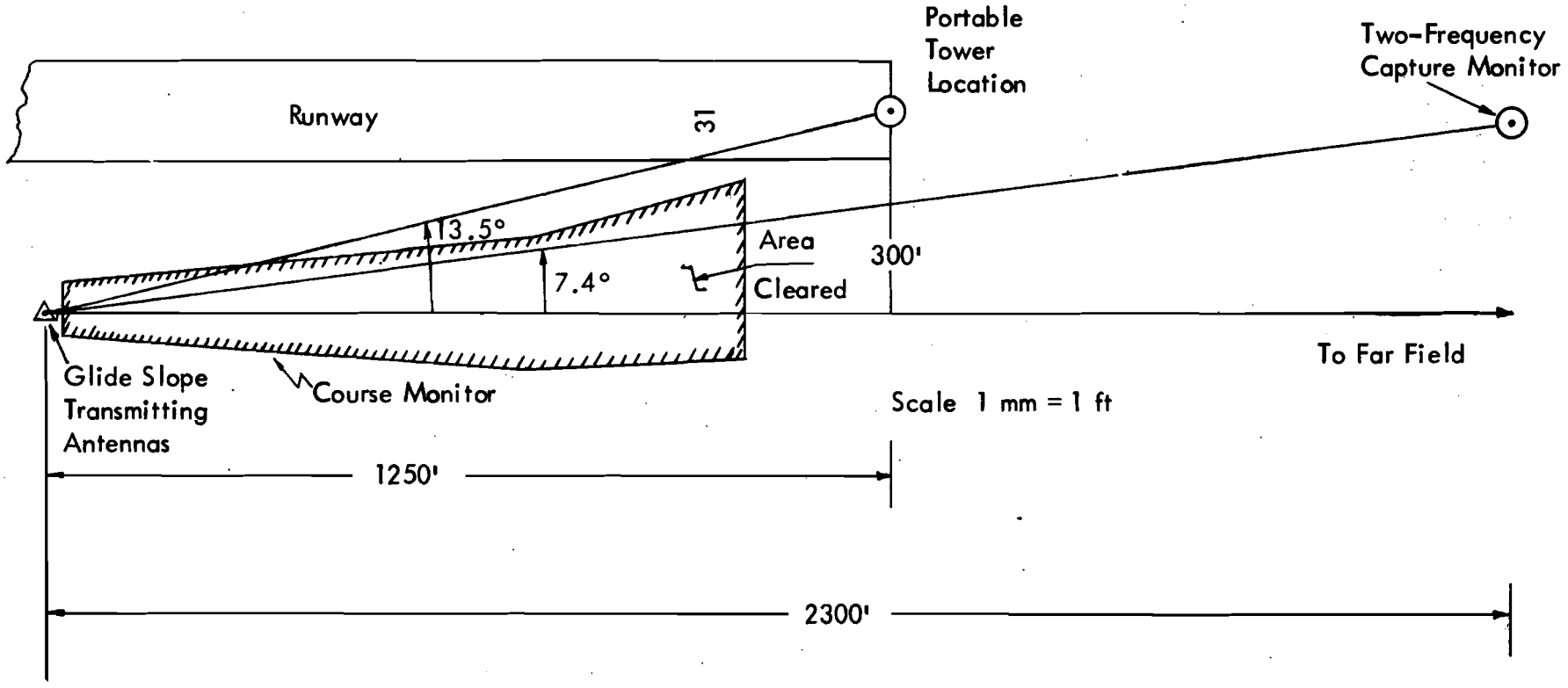

Figure 1. Layout of Site at Houghton, Michigan.

Because of past pressures from the FAA, the airport management at Houghton was very aggressive in plowing the glide-slope reflecting plane (see Figure 3) in spite of the operational problems and cost factors. Even though a total of 238 inches of snow fell during the winter with 50 consecutive days of snow producing 127 inches, only twice did the snow depths exceed specifications of FAA Order 6750.17 requiring that the facility be shut down. One of the occasions permitted extensive measurements to be obtained.

Generally throughout the winter the results of plowing complicated the process of assessing correlation between depth of snow cover and far-field path angle (see Figures 4, 5, 6). Figure 2 summarizes data derived from aircraft flights and measurements of snow depth on the reflecting plane. The theodolite for flight reference is shown in Figure 7. The most significant finding is that the far field does not go out-of-tolerance even with snow depths of 14 inches. Data also indicates that noise in the measurements due to a variety of factors such as theodolite calibration, turbulent air effects, airborne equipment calibration, and accuracy of standards contributed variations which are a substantial part of the glide-slope, path-angle tolerance values of 0.2 degree. Specific evidence of this are the values of path indicated for zero snow depth. These values obtained by the Michigan Technological Institute are not peculiar to their measurements but are frequently intrinsic to the information reported on snow effects. Because of the difficulty in obtaining laboratory-type measurements in heavy snow environments, elegant correlations are not commonly apparent.

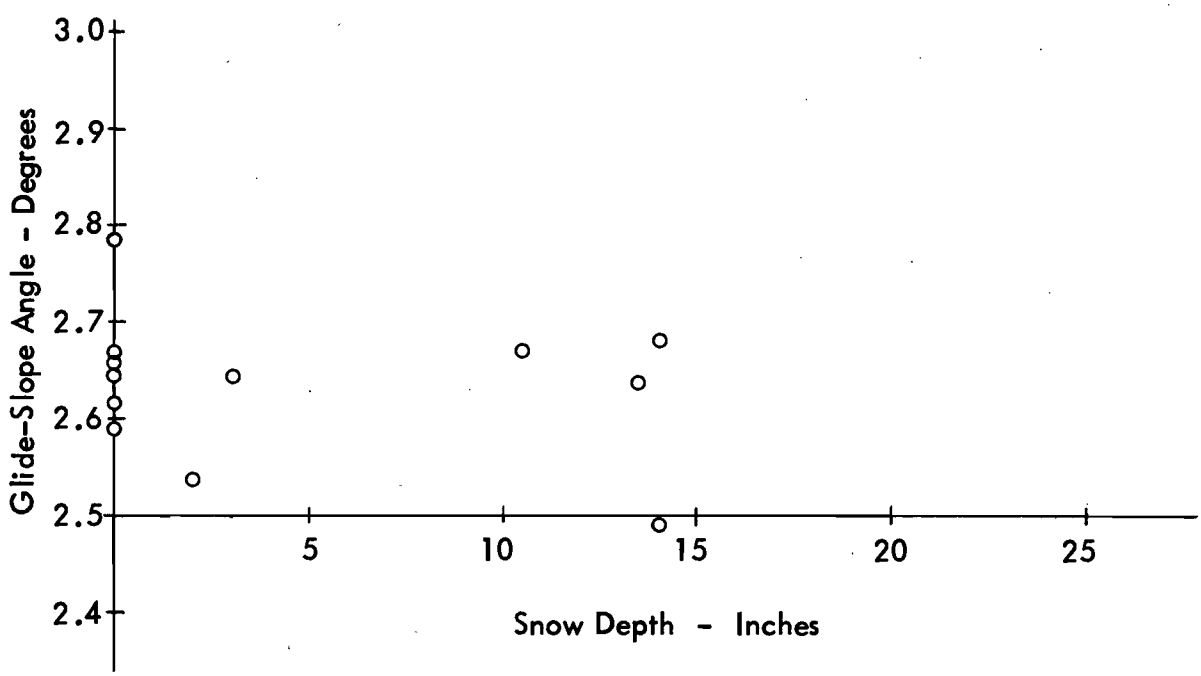

Figure 2. Glide-Slope Angle versus Reflection Zone Snow Depth - Flight Data - Houghton County Memorial Airport - Winter, 1974-75.

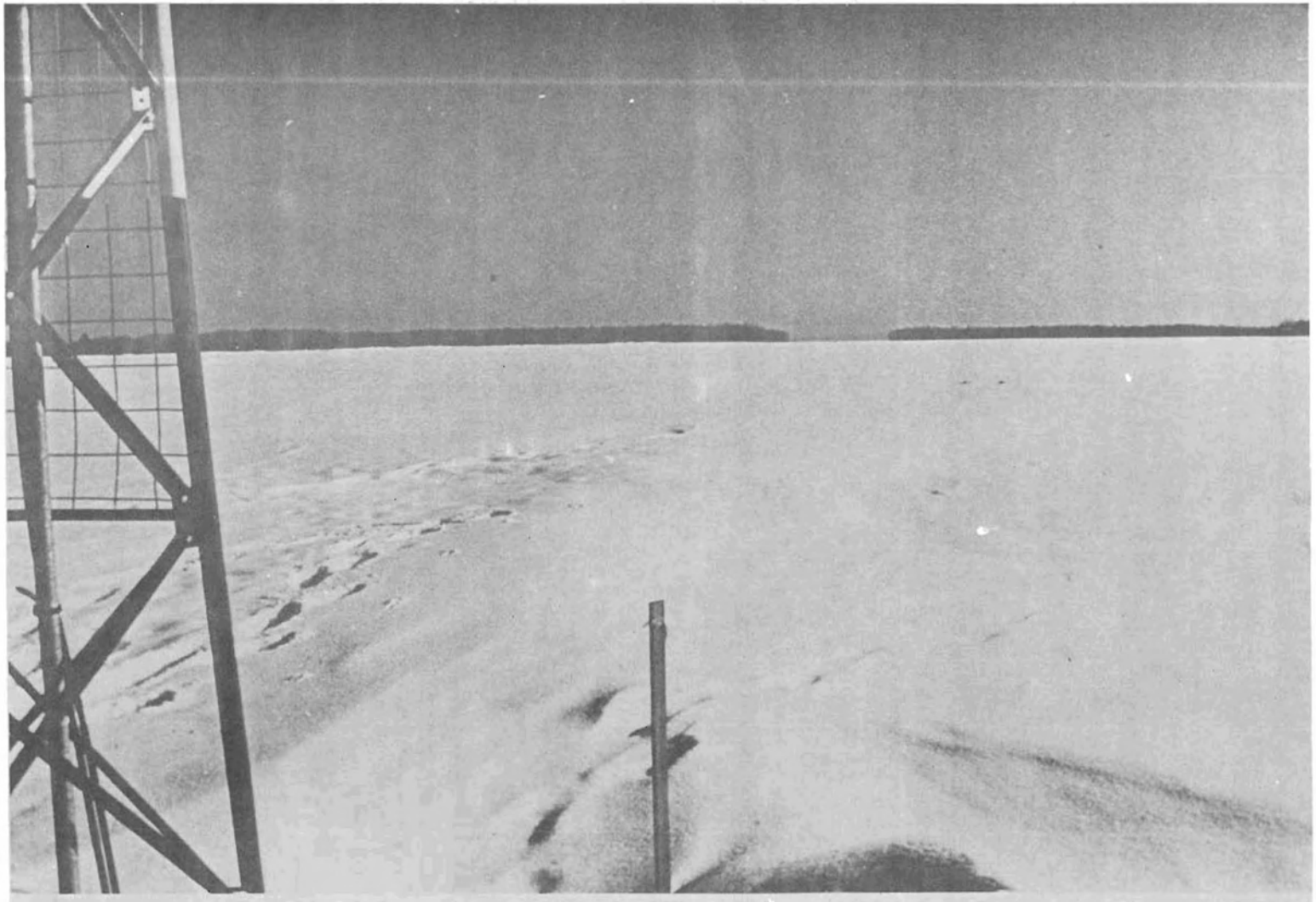

Figure 3. View of the Reflection Zone Serving the Null Reference Glide Slope at Houghton County Memorial Airport, Houghton, Michigan. Picture was taken from the base of the antenna mast looking southeast into the approach region. (Photograph courtesy of Michigan Technological University.)

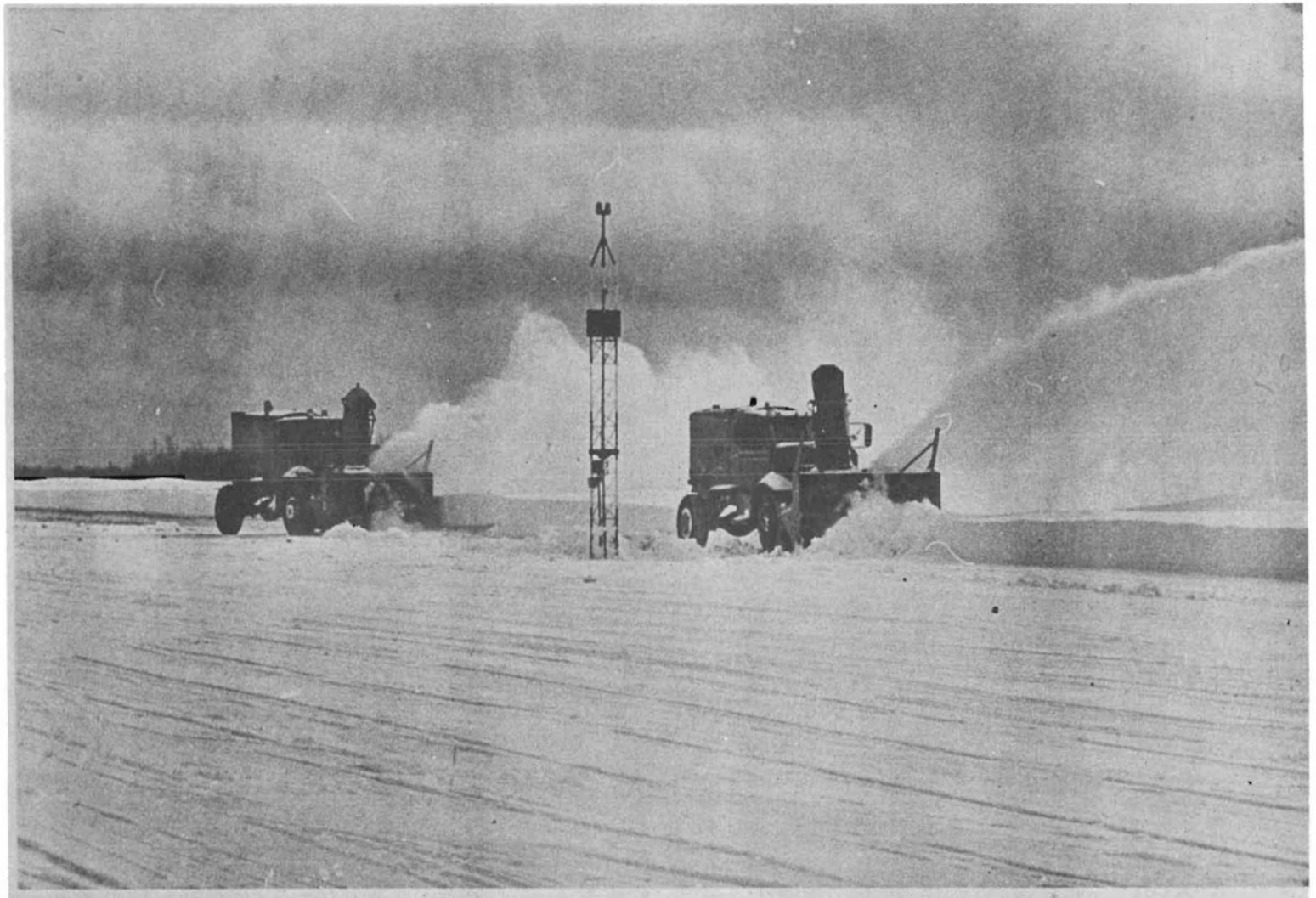

Figure 4. Snow Blowers in Action Clearing the Houghton Site Near the 180° Course Monitor Mast. Note that the snow clearing involves repetitive movement of the snow as it is progressively moved to an area where it is no longer of concern. Conventional plowing is not suitable for this type of operation. (Photograph courtesy of Michigan Technological University.)

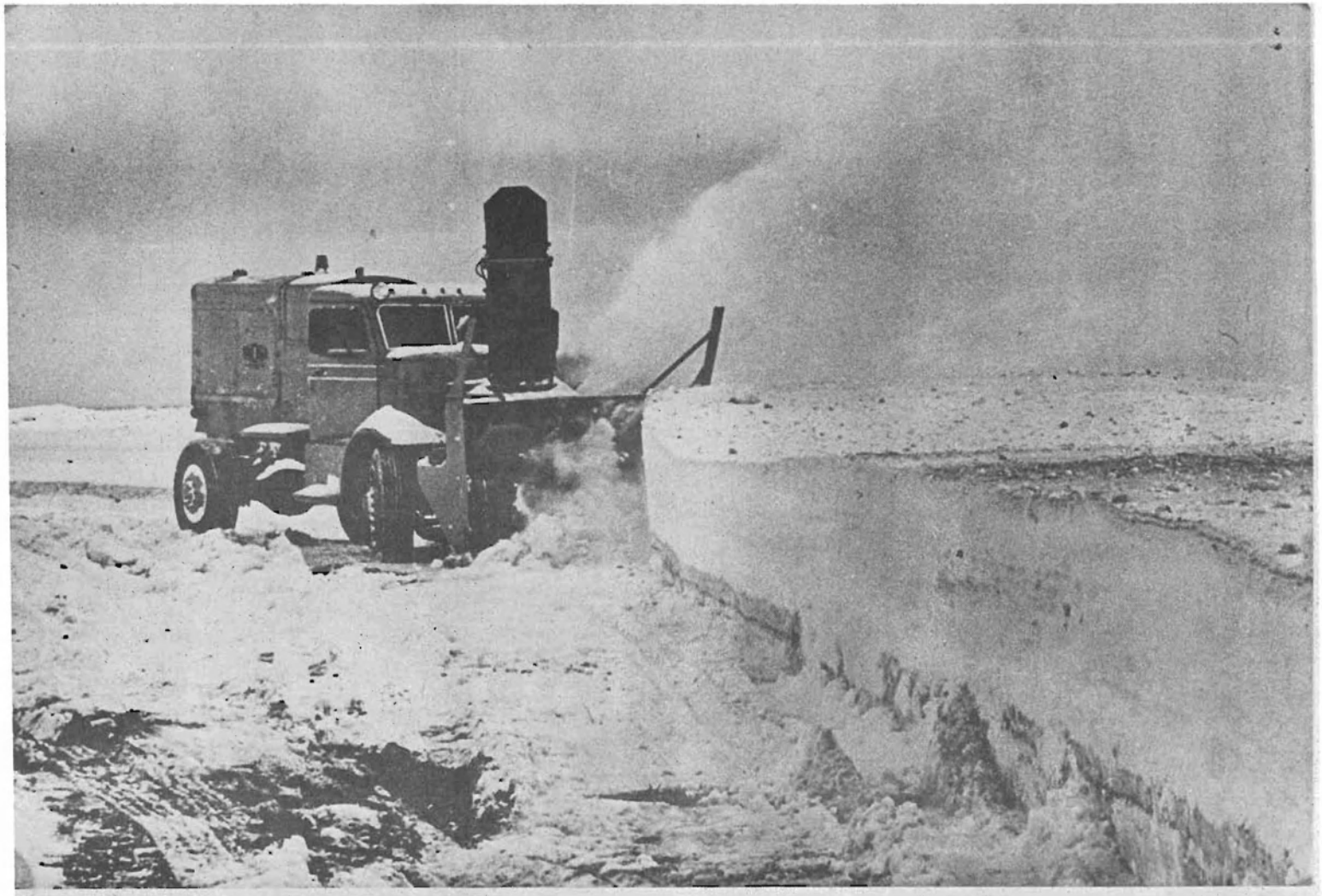

Figure 5. Snow Blower in Process of Moving a Portion of the Snow Bank That Has Accumulated in the Reflection Zone on the Farthest Side from the Runway. The height of the snow scoop in front is 5 feet. (Photograph courtesy of Michigan Technological University.)

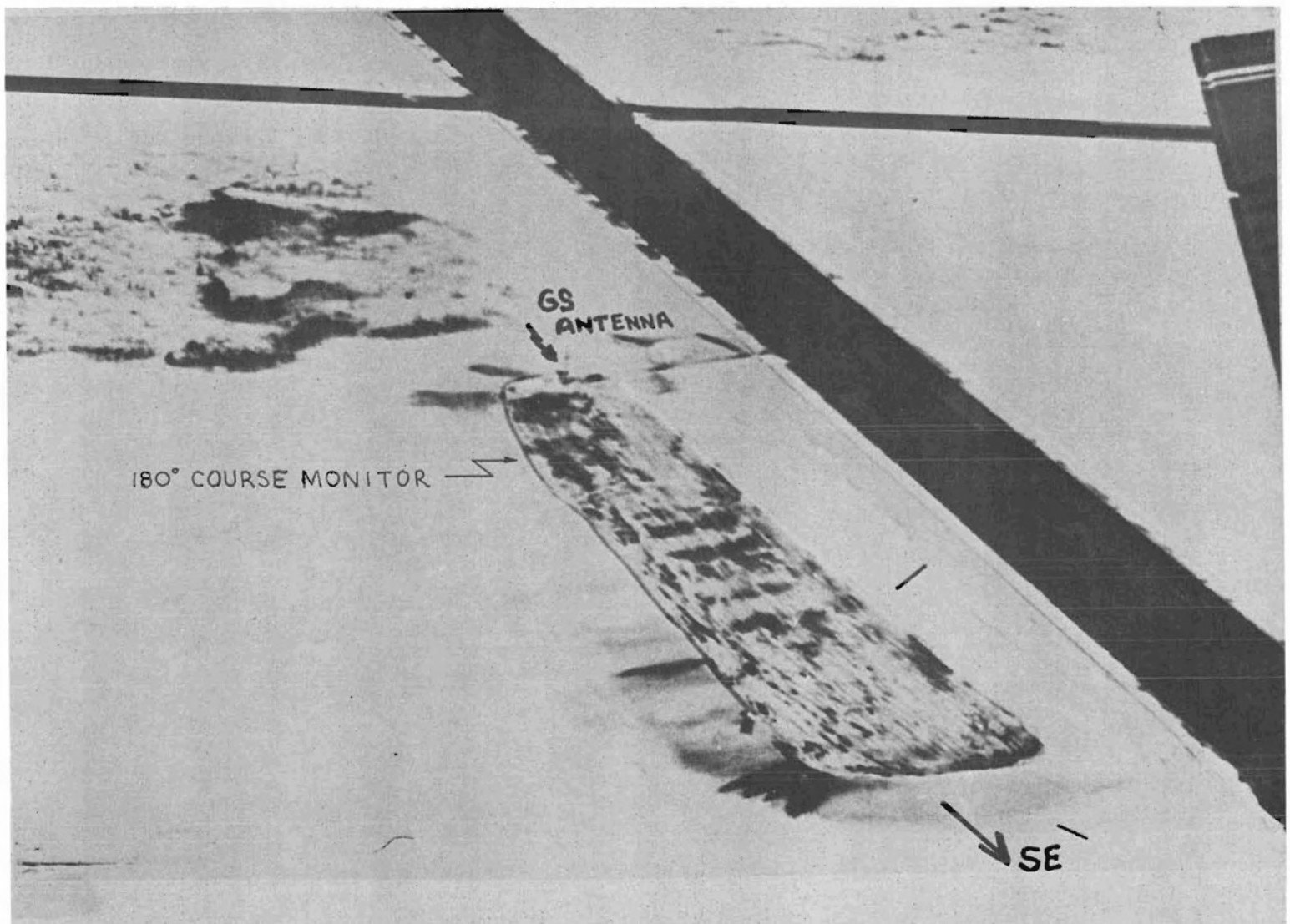

Figure 6. Aerial View of Plowed Area in Front of the Glide Slope at Houghton County Memorial Airport. (Photograph courtesy of Michigan Technological University.)

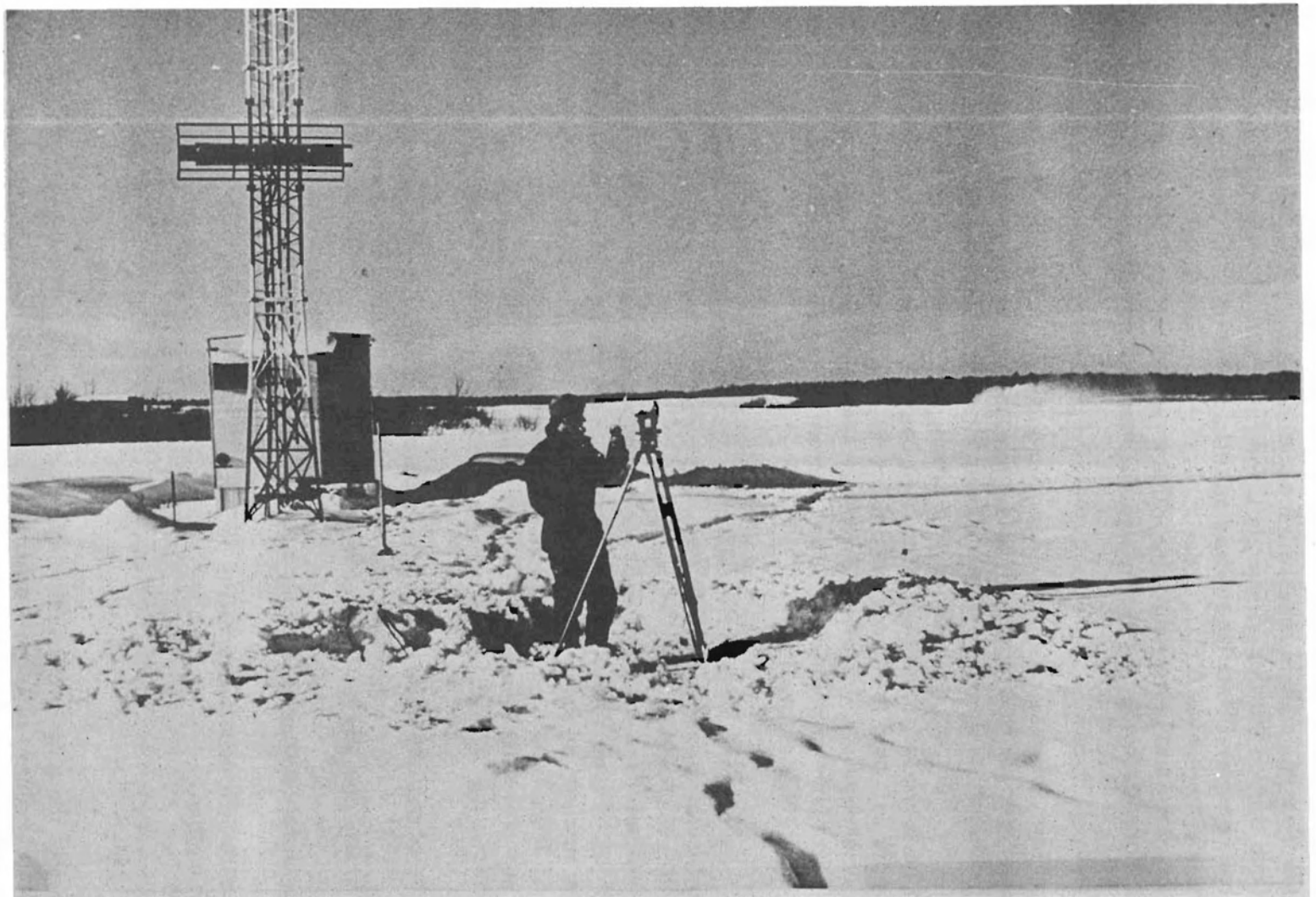

Figure 7. Theodolite Location in Front of the Glide Slope Transmitting Antennas. This location with a specially-poured cement pad was used for referencing both aircraft and tower measurements. (Photograph courtesy of Michigan Technological University.)

Clearer evidence of a direct relation between path angle and snow depth can be found in Figure 8. Here the path measurements are made with a tower at the threshold, and the snow depth value used is for the bank of snow which accumulated from plowing the runway. From this graph one can deduce that the path angle is increased with snow-bank accumulation to the extent that Category II facilities should not allow snow banks to exist ahead of the glide slope alongside the runway. FAA Order 6750.17[2] provides for the minimum clearing of lateral snow banks to protect the path in the threshold region. The reader should keep in mind that snow banks of concern here are those with depths greater than three feet.

Some data from tower measurements showed some broadening of the path structure as measured by a portable tower (see Figure 10) at the threshold as the height of the snow banks increased. Consideration should be given to this, for even though the 0.2 degree tolerance limit in the far field was not reached, the broadening tendency was clearly evident. Care must be exercised in not permitting snow banks to remain at the threshold. Although the path angle will tend to increase to protect the aircraft from mounds of snow, the broadening phenomenon offsets this to derogate the safety advantage. Technically this threshold snow effect is not a problem for Category I specifications but should be considered an item of safety, nevertheless.

The continual plowing of snow from the reflection area at Houghton precluded great depths (> 18 inches) from being measured. This plowing produced, in effect, a bowl which was continually smoothed by wind effects. Thus, no simple averaging could give an accurate, single value for snow depth. Such conditions are difficult to analyze and obtain nice correlations. Figure 9 illustrates this readily as all the variables combine to produce great scatter in observed points. From experience in obtaining these data points and analyzing results, there is nothing to indicate that given a reasonably smooth snow cover, a far-field, out-of-tolerance condition would be produced with less than 18 inches of snow.

A good example of a glide-slope monitor being unrepresentative is illustrated by data from January 3, 1975. Fourteen inches of snow existed rather uniformly throughout the whole glide-slope site area giving 160% of alarm at the 180° course monitor. Flight measurement indicated the angle to be 2.49°. This condition is not rare and provides considerable motivation for replacement of this type of monitor.

Appendix A contains in tabular form some of the detailed data collected during the snow season at Houghton.

IV. NORTH CENTRAL AIRLINES DATA

Inasmuch as two of the glide-slope facilities at the sites - viz, Hibbing (HIB) and International Falls (INL) - shown in Table 1 operated most of the winter with unplowed ground planes, the snow having been removed only for the small areas affecting the monitor, a group of users was given an opportunity to fly the glide slopes and observe the effects of deep snow. Through the cooperation of North Central Airlines and its pilots, 16 responses were

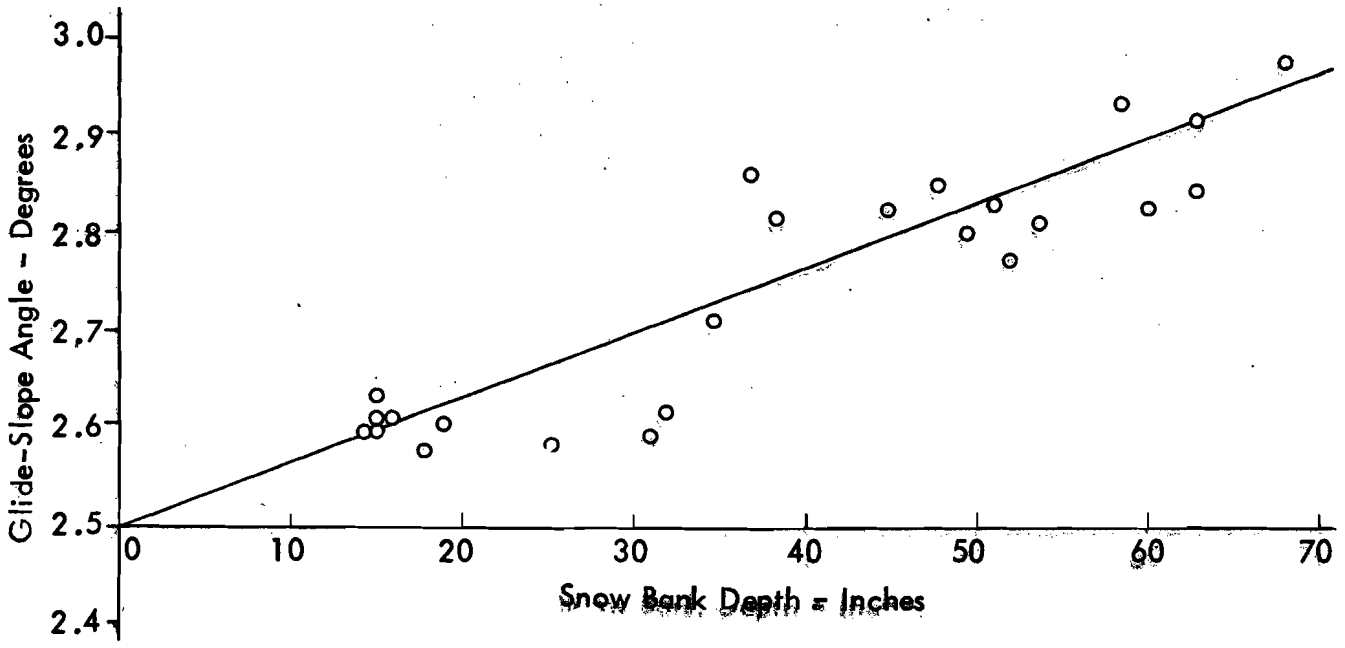

Figure 8. Glide-Slope Angle at Threshold versus Snow Bank Depth - Tower Data - Houghton County Memorial Airport - Winter, 1974-75.

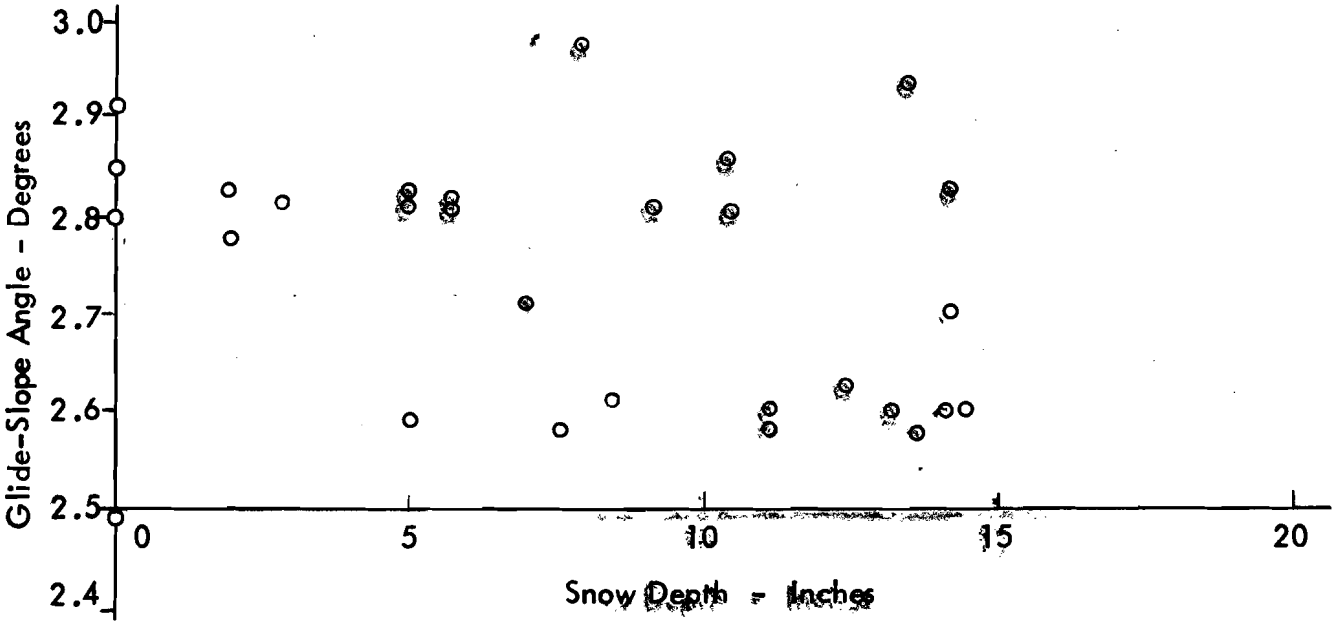

Figure 9. Glide-Slope Angle versus Reflection Zone Snow Depth - Tower Data - Houghton County Memorial Airport - Winter, 1974-75.

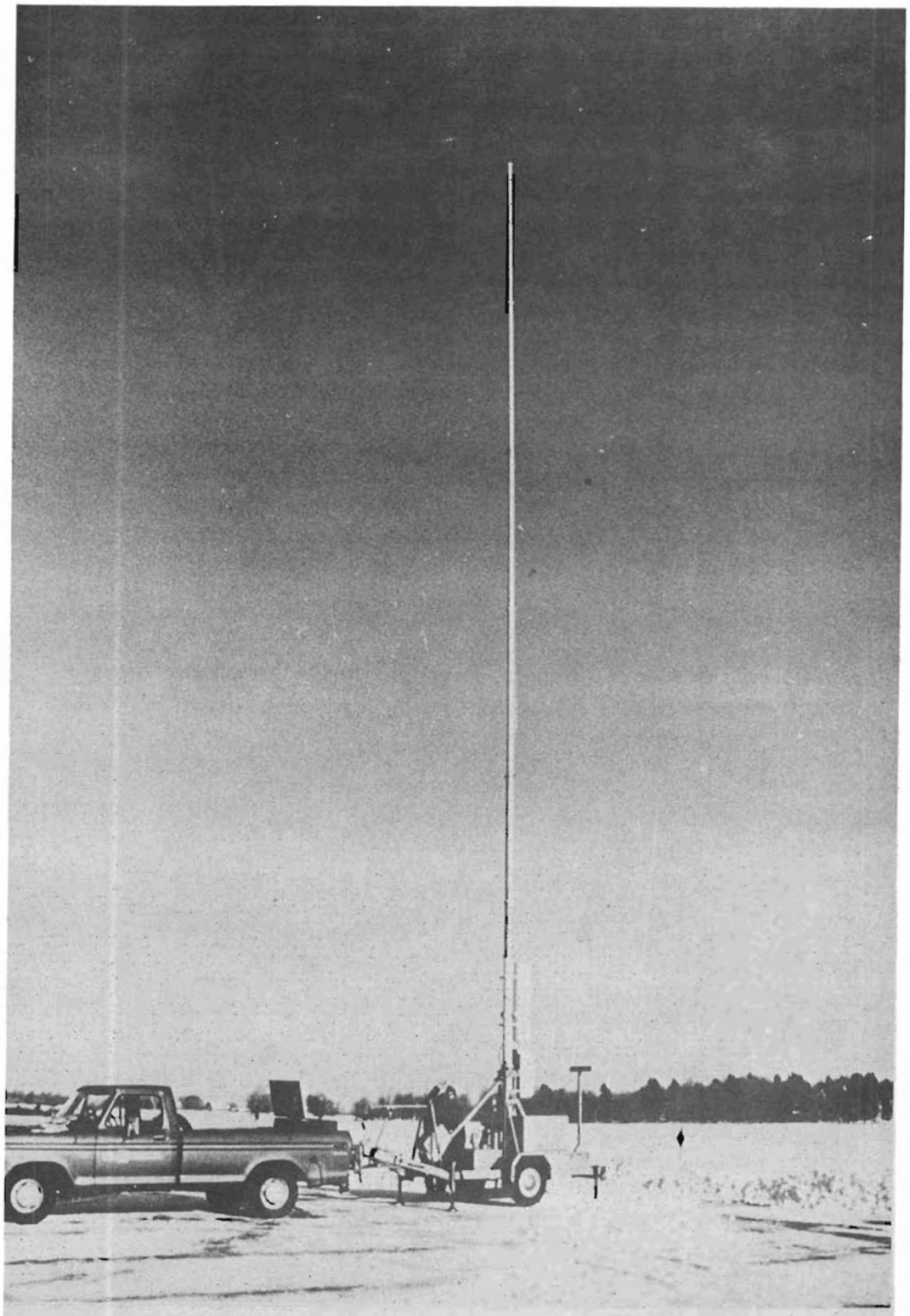

Figure 10. Photograph of Clark Tower Used to Measure Glide-Path Parameters in the Space Directly Over the Runway Threshold at Houghton County Memorial Airport. This tower operates by pneumatic means and will extend to approximately 70 feet. (Photograph courtesy of Michigan Technological University.)

Station	Type Facility	Commissioned Angle	Date FAA FIFO Flight Check	FAA Values Angle/Width	NAFEC Nominal Values June 16-19, 1975 Angle/Width With Theodolite	Snow Depth	NAFEC Measured Angle with Snow Date/Angle/Width With Theodolite	Δ Angle Reference NAFEC Values
HIB	Null Reference	2.50	4/18/75	2.56/.64	2.58/.73	24"	Feb.26/2.60/.60	+.02
						24"	Apr.2/2.64/.62	+.06
INL	Null Reference	2.70	4/18/75	TX-1 2.81/.69	2.67/.63	24"	Feb.27/2.91/.84	+.24
				TX-2 2.80/.72		18"	Apr.3/2.90/.81	+.23
DUL	Capture Effect	2.62	7/11/75	TX-1 2.57/.73	2.73/.68	6"	Feb.28/2.69/.65	-.04
				TX-2 2.53/.70		12"	Apr.1/2.73/.74	0
MQT	Null Reference	3.00	6/23/75	3.00/.61	2.98/.63	12"	Mar.31/2.99/.59	+.01

Table 1. Summary of Snow Data Taken by FAA NAFEC Staff Using Heavy Aircraft.

obtained to a questionnaire which asked the captains of flights into Hibbing and International Falls whether they had detected any unusual or abnormal indications from the ground-based glide-path system. Fifteen responses answered with unqualified NO's. One pilot reported that he had made a total of 19 approaches with all of them being normal. One captain did report that he observed significant localizer and glide-slope variation without flagging. In summary, of a total of 36 approaches there were 35 reported where no unusual glide-slope indications were obtained in spite of very deep snow (18 to 30 inches).

V. NAFEC FLIGHT MEASUREMENTS

During the 1974-75 winter it was learned that snow was not being plowed out of the entire reflecting planes at Hibbing and International Falls, Minnesota. The monitor areas were cleared but limitations in equipment prevented snow removal from the areas serving the far field. Through the cooperation of FAA personnel at NAFEC, Atlantic City, New Jersey flight theodolite-referenced data was obtained from these facilities on two separate occasions. This was rare and very valuable information because it represented an FAA-crewed and calibrated aircraft, operating at sites where deep snow existed with flight data referenced by a theodolite. A summary of the data obtained from the flights is contained in Table 1. This evidence shows that even with 24 inches of snow, the path angle and width are well-behaved and that noise in measured data can account for a significant portion of the dispersion observed and can mask good correlation. An initial impression might be that 24 inches of snow at International Falls produced a path 0.04 degree outside of tolerance; however, data from Hibbing indicated that a 24-inch snow depth produced at most 0.06 degree change. Probably unidentified factors are affecting measurements. Clearly the snow causes no significant decrease in path angle or change in path width.

These numbers were some of the most careful data ever obtained and involved the use of well-calibrated equipment operating in DC-6 and Convair 880 aircraft. One can conclude from these data that two feet of snow produces changes only slightly outside the noise of carefully-controlled field measurement data. One knowledgeable in flight operations readily identifies that changes of these magnitudes are not detectable on routine flight operations.

VI. GLIDE-SLOPE CAPTURE MONITOR

Work during this snow season included installation of a far-field capture type monitor at the Houghton County Memorial Airport test site. The capture monitor as installed January 27, 1975 at Houghton is shown in Figures 11 and 12 and is essentially the same as was used for the Tamiami, Florida tests and laboratory simulations described in FAA Report "Instrument Landing System Improvement Program: Far-Field Monitoring"[3]. Data was taken at Houghton using the capture monitor during February, March, and April for comparison with the flight data and the threshold path data previously discussed.

The capture monitor probe was located approximately 2300 feet from the glide-slope transmitter on the extended runway centerline. The transmitted glide-slope signal was

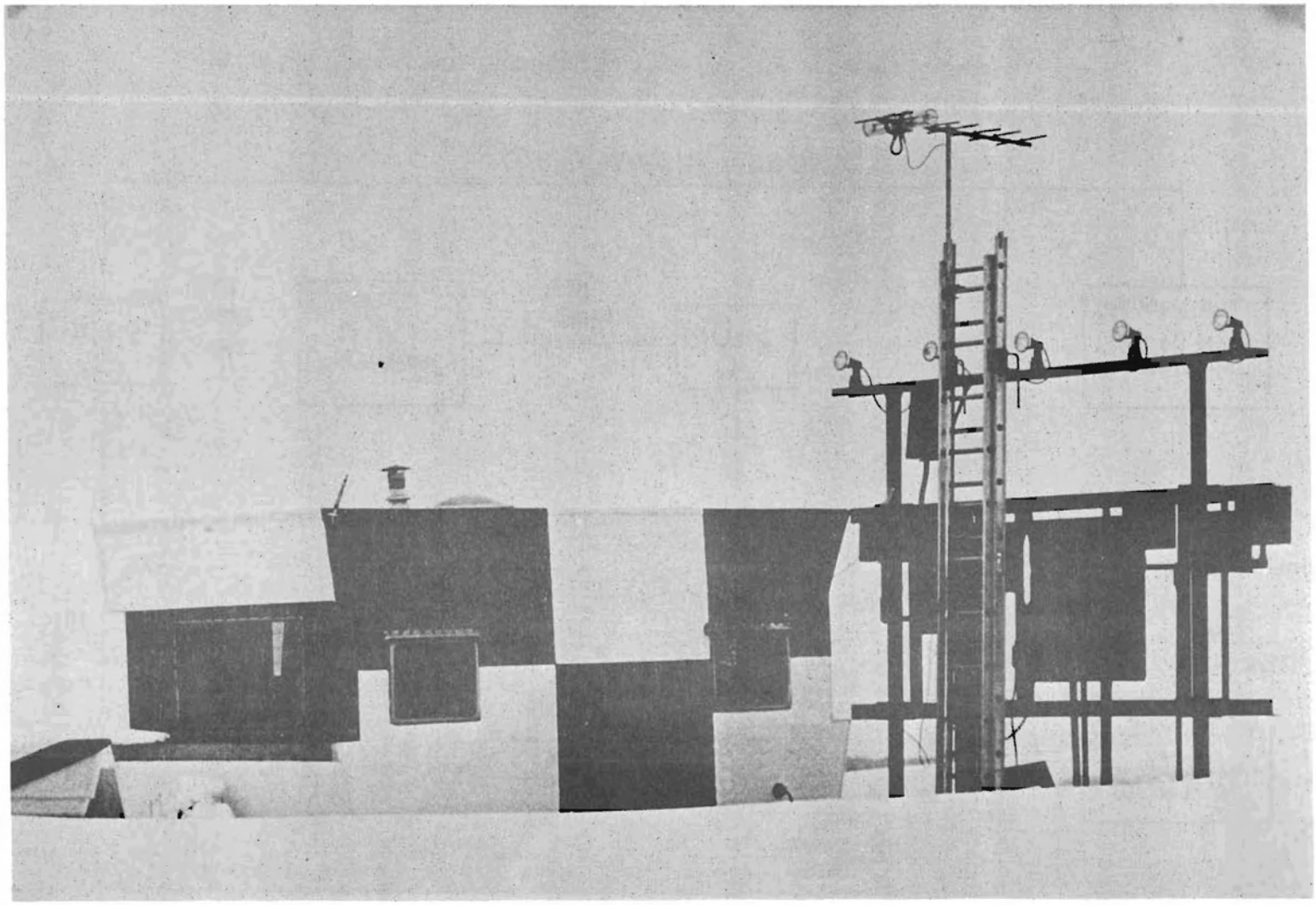

Figure 11. Probe Antenna Shown Mounted on the 1200-Foot Light Bar at the Houghton Airport. This served the far-field, two-frequency capture monitor. Trailer was used for housing the monitor equipment. (Photograph courtesy of Michigan Technological University.)

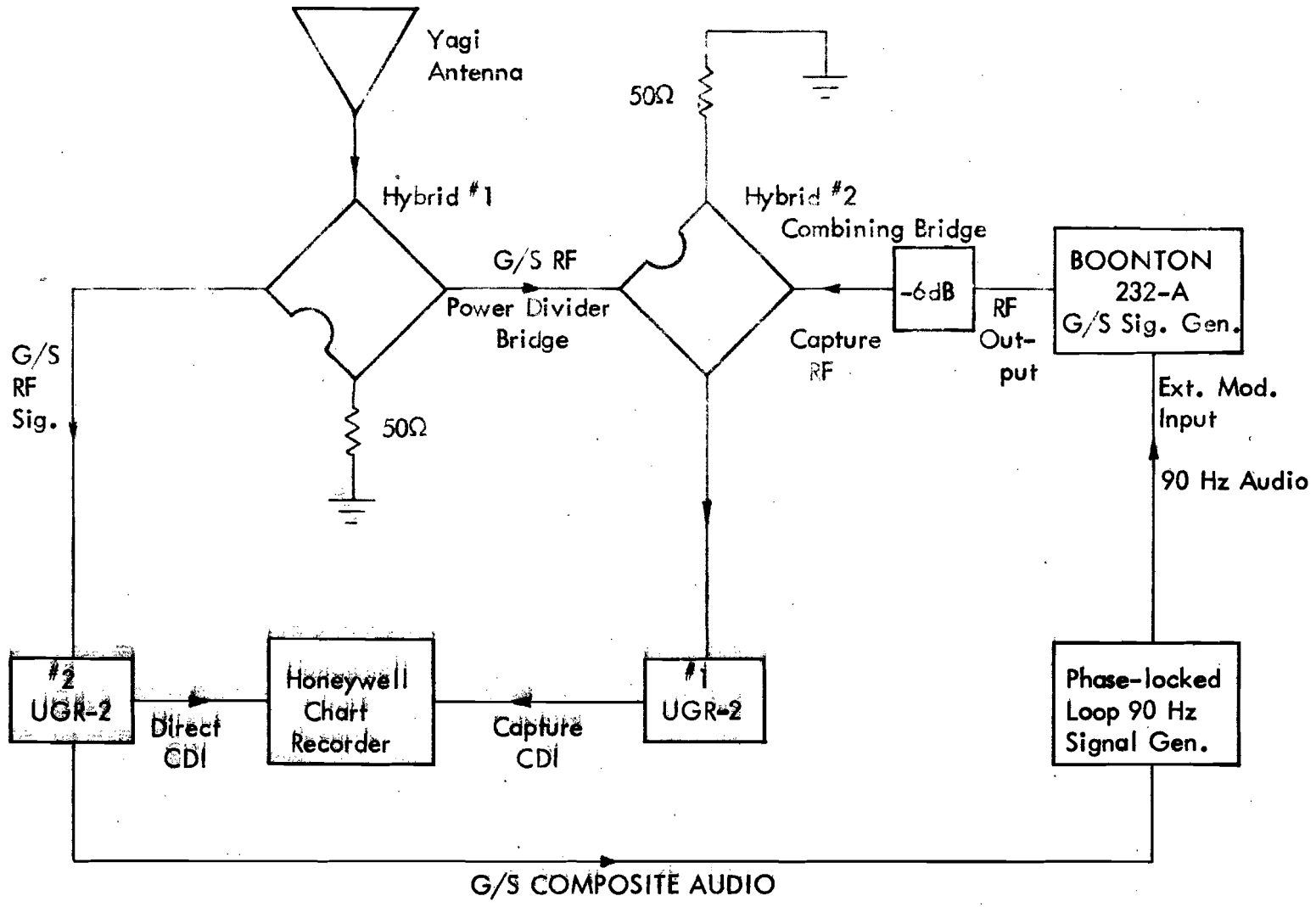

Figure 12. Houghton, Michigan Capture Monitor Implementation.

received with a yagi antenna placed 15 feet above ground level at the monitor site. The location of the monitor site is shown in Figure 1, and the ground plane profile along a line from the glide-slope antennas to the monitor antenna is shown in Figure 13.

The main difference between the capture monitor used at Houghton and that used in the Tamiami tests was the addition of a phase-locked loop 90 Hz generator as indicated in Figure 12. This equipment was necessary because the glide-slope transmitter used at Houghton employs a mechanical modulator, driven by a 60 Hz AC power source which is not phase-locked to the commercial power line. Since the power line frequency cannot be utilized to synchronize the local 90 Hz audio generator used in the capture monitor, the phase-locked loop 90 Hz generator, which locks to the received 90 Hz from the glide-slope carrier, is used. The phase-locked loop 90 Hz generator is shown in block diagram form in Figure 14. A detailed schematic can be found in Appendix B.

Another problem that was encountered at Houghton was the instability of the RF output level of the Boonton 232A signal generator that was used for the capture generator in the monitor circuitry. Because of this, all readings taken prior to March 6 were accomplished by red-lining the output level meter prior to taking data to minimize the effect of the instability. To provide the needed stability, additional circuits were designed and installed on the Houghton monitor during the first week of March. The RF amplitude control and linear modulator circuit shown in block diagram form in Figure 15 was that used to stabilize the output of the Boonton 232 A capture generator in terms of RF level and percent modulation.

A detailed schematic of this circuitry may be found in Appendix B. The entire capture generator employing this new equipment is shown in Figure 16. In this circuit, the Vector Voltmeter senses the final output from the circuit and provides a 20 KHz replica of the 335 MHz carrier envelope. The 20 KHz signal is available as an output from the Vector Voltmeter. The 20 KHz envelope is applied to the control circuit where it is amplified and linearly detected. After detection a DC level is present which is proportional to the carrier level which is compared to a constant DC level, and an error signal is produced if the levels are not equal. An AC signal, produced in the detection process, is compared to the desired 90 Hz modulating signal, and an error signal is produced. Both of these error signals are amplified and applied to a modulator which can control the RF level from the 232A generator. The error signals control the modulator in the correct sense so that the resulting action of the modulator tends to reduce the error signals (negative feedback). In this way the gain of the error amplifier forces the RF level and percent modulation to be very close to preset levels. The 20 KHz signals and higher order harmonics produced in the demodulation are filtered out so as not to become part of the error signal and contaminate the carrier with 20 KHz modulation. For convenience the control circuit incorporates potentiometers so that the RF level may be set over a range of 2:1 and the percent modulation may be set over a range of approximately 45 to 90 percent. Table 2 shows the change in output for a given change in input RF level. This data shows that the control circuit stabilizes the output to a large extent. The input level changes in Table 2 are much larger than those which have been encountered in practice.

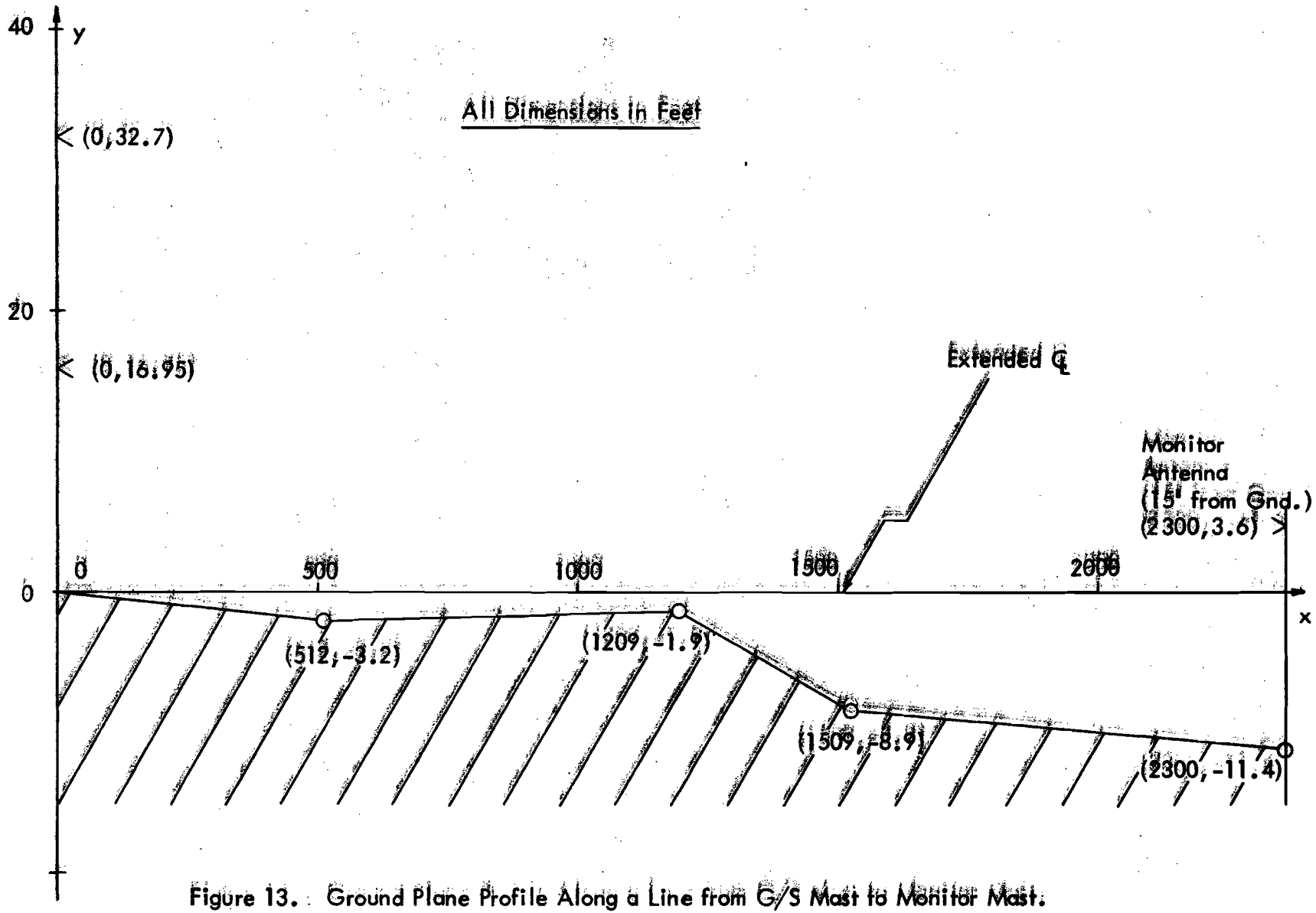

Figure 13. Ground Plane Profile Along a Line from G/S Mast to Monitor Mast.

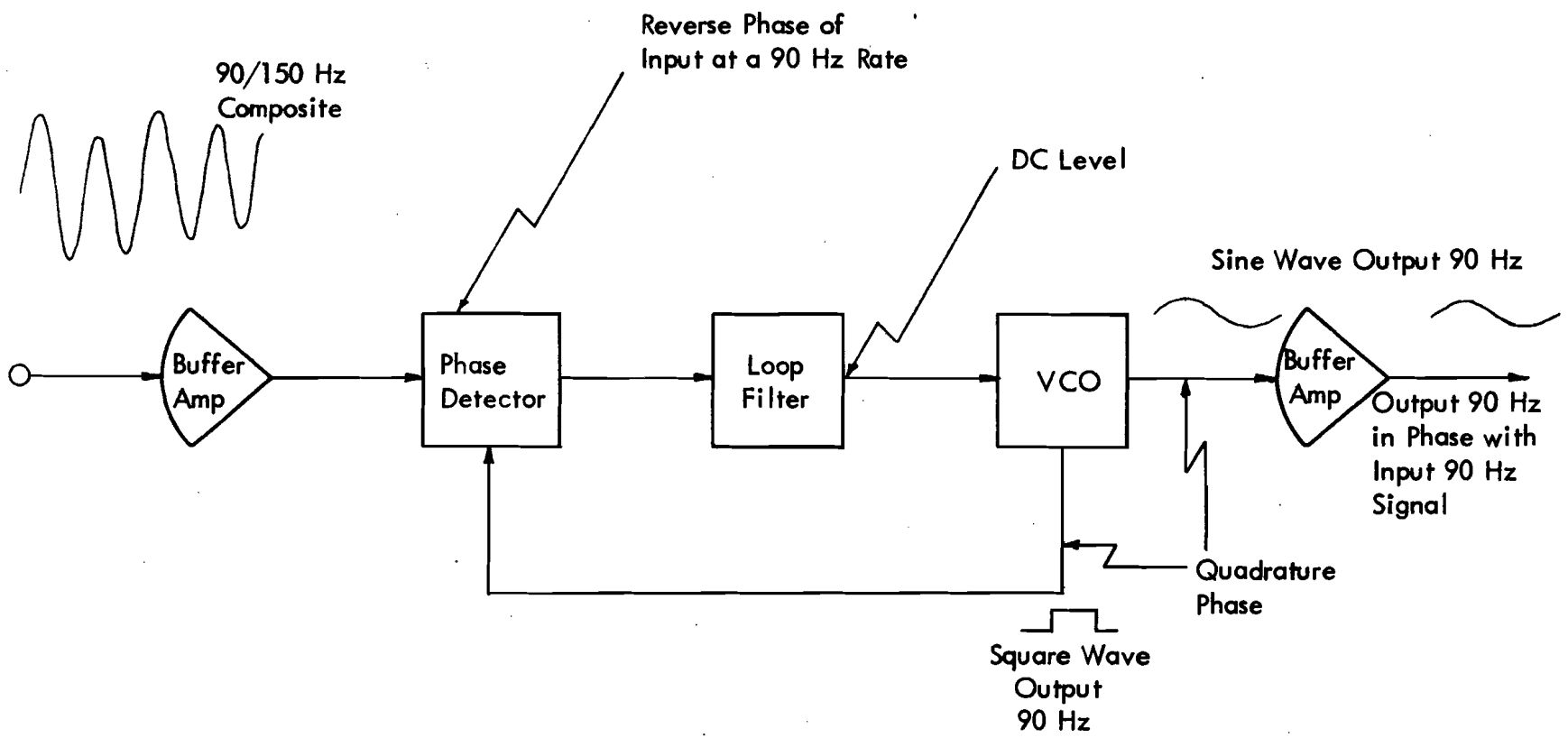

Figure 14. Phase-Locked Loop 90 Hz Generator Block Diagram.

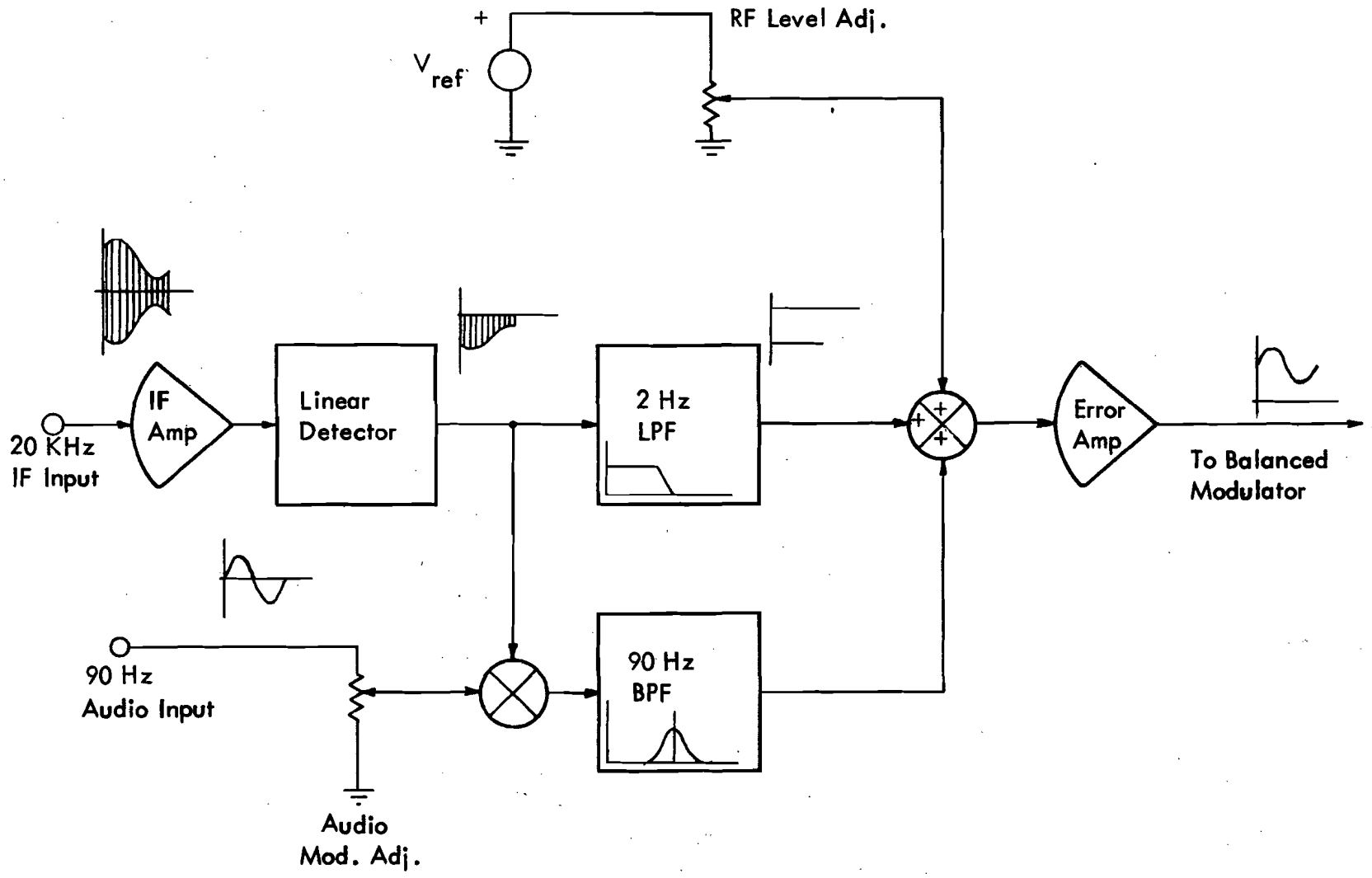

Figure 15. RF Amplitude Control and Linear Modulator Circuit Block Diagram.

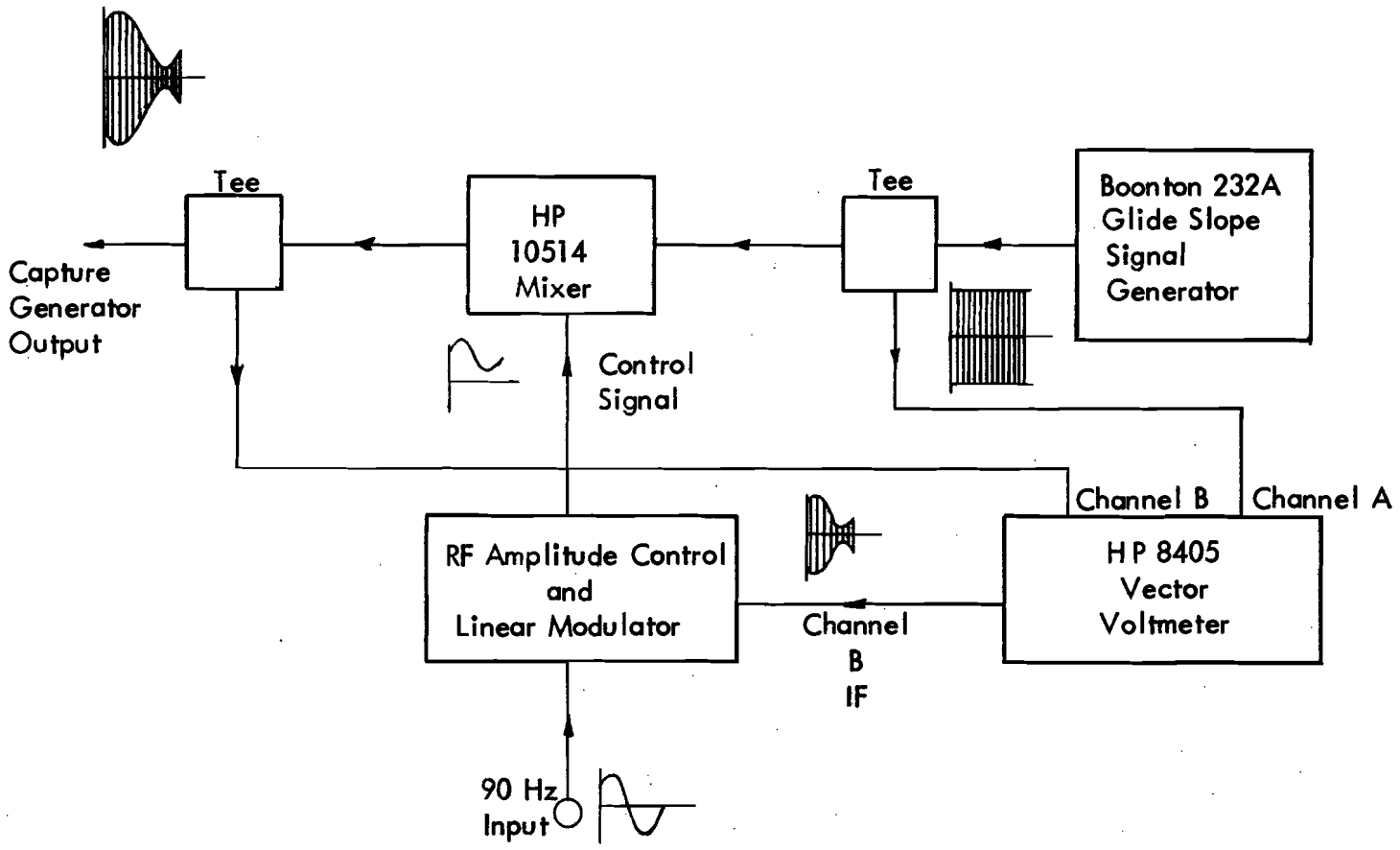

Figure 16. Stabilized Capture Generator with RF Amplitude Control and Linear Modulator Circuitry.

INPUT FROM 232A (mV)	OUTPUT OF STABILIZED CAPTURE GENERATOR (mV)
156.	19.0
200.	19.2
233.	19.3

Table 2. Input - Output Data for Stabilized Capture Generator.

The performance of the capture monitor versus flight data and tower data is shown in Figure 17. Comparison of the far-field flight data with the monitor data shows a relationship as predicted by the theory in that the monitor output decreased as the path raised. The data for comparison to tower measurements indicates a performance contrary to that expected from theoretical considerations. This is believed to be due to the accumulation of the snow bank, as described earlier, that was present on a line of site between the glide-slope antennas and the tower measurement point at the threshold, whereas the reflecting plane serving the path in the area of capture monitor location (middle marker) was cleared of snow. Tabular data is included in Appendix A.

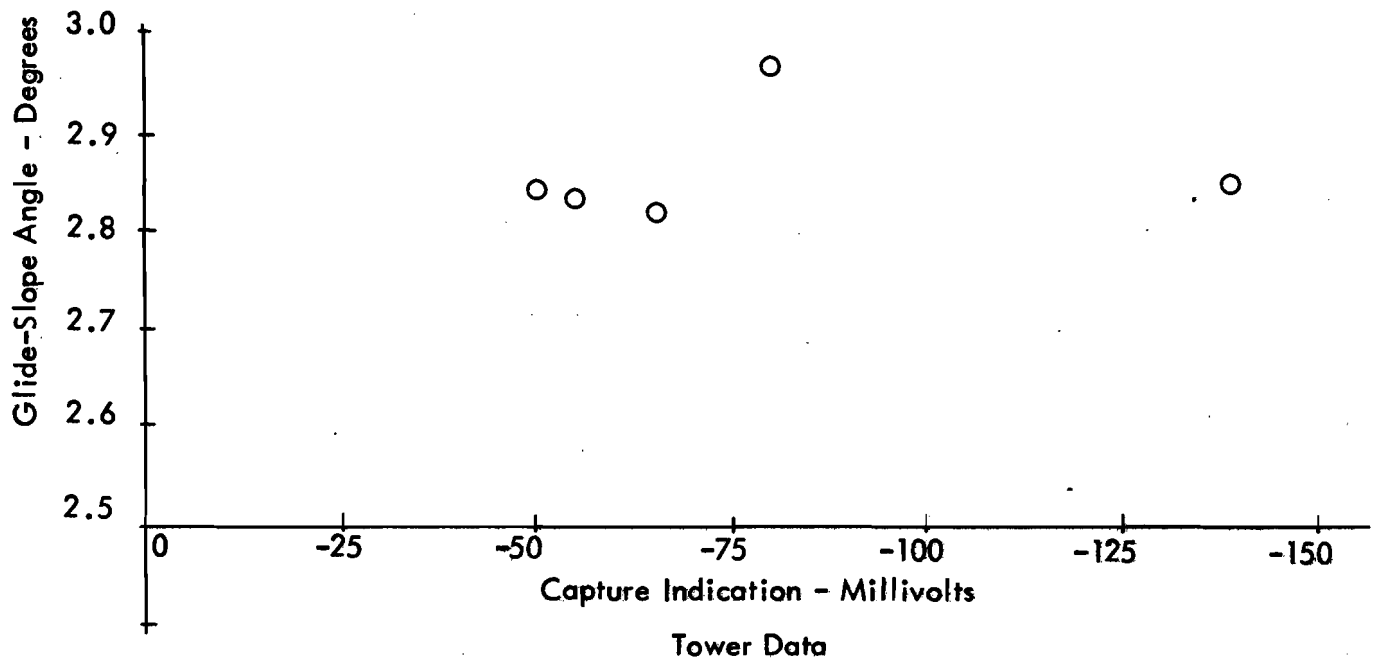

Tower Data

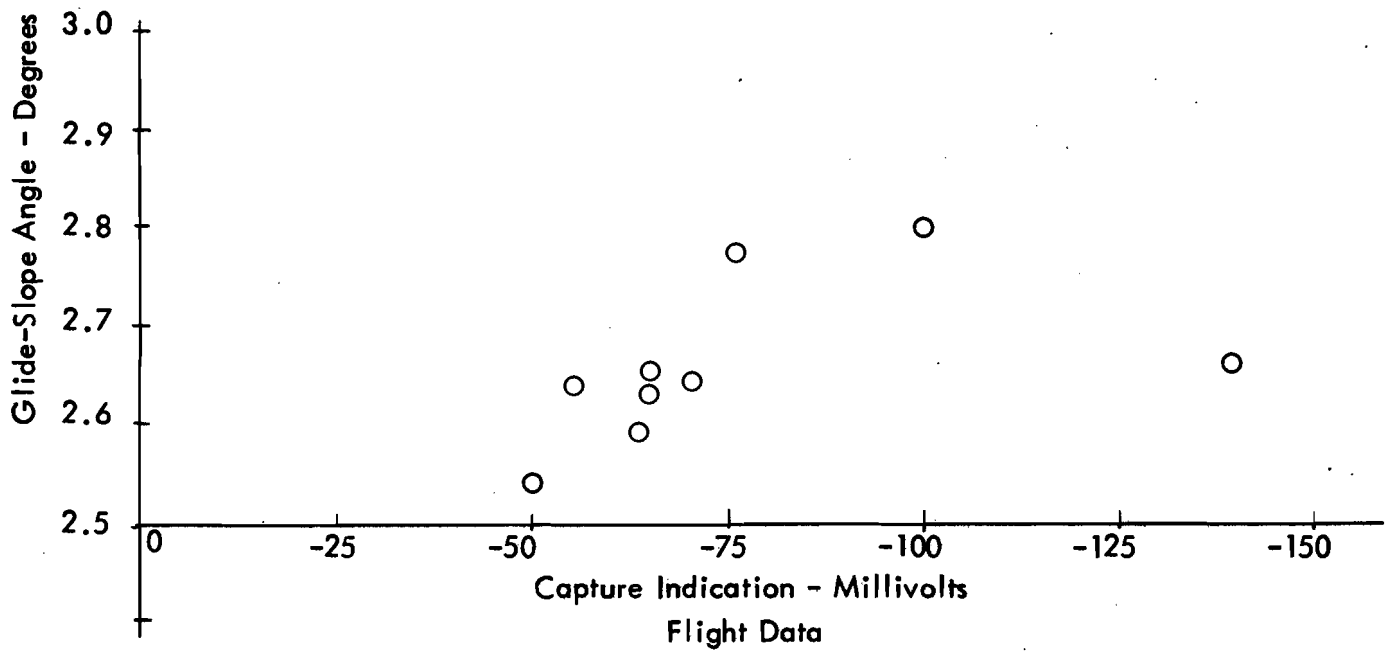

Flight Data

Figure 17. Far-Field Capture Monitor Indications versus Glide-Slope Angle.

VII. INVESTIGATORS AND ACKNOWLEDGEMENTS

The credit for the data gathered at the Houghton County Memorial Airport site belongs to the Michigan Technological University staff: Dr. Jon Soper, Dr. Ralph Horvath, Dr. Dennis Wiittanen, and their student assistants. Credit for the information obtained from the special flight missions to Hibbing, Duluth, International Falls, and Marquette is given to Mr. William Yost and his colleagues at NAFEC. Also, sincere appreciation is extended to Mr. R. P. Johnson and the numerous crews of North Central Airlines who responded to questionnaires concerning glide-slope performance during snow periods.

The concept of the two-frequency, capture-type far-field monitor was originated by Mr. H. H. Butts of the FAA R and D staff.

The efforts of technical staff at Ohio University are acknowledged. In particular, credit is given to Mr. Larry Mitchell who did most of the work on the far-field, two-frequency monitor, and to Mr. Paul Blasche, Mrs. Hope Mills, and Mrs. Roma Beverage for their help in producing this report.

VIII. REFERENCES AND BIBLIOGRAPHY

[1] McFarland, Richard H., "Investigations to Provide Improved Glide Slope Operation During Periods of Ground-Plane Snow Cover," Volume I - Summary and Conclusions, FAA Report Number RD-74-69, I, Report EER 5-17, Avionics Engineering Center, Department of Electrical Engineering, Ohio University, Athens, Ohio, April, 1974, pp. 1-3.

[2] "Maintenance of ILS Glide Slope Equipment", FAA Order 6750.17, August 25, 1971, paragraph 112b(5).

[3] "Instrument Landing System Improvement Program: Far-Field Monitoring," Final Report, Number RD-75-201, Report EER 5-21, Avionics Engineering Center, Department of Electrical Engineering, Ohio University, Athens, Ohio, January, 1975, pp. 33-41.

Battistelli, J. J. and R. H. McFarland, "Investigations to Provide Improved Glide Slope Operation During Periods of Ground-Plane Snow Cover," Volume II - Details of 1972-1973 Investigations, FAA Report No. RD-74-69, II, Report EER 5-18, Avionics Research Center, Department of Electrical Engineering, Ohio University, Athens, Ohio, April, 1974.

"Earth Cover and Contour Effects on Image Glide Paths," Final Report, FAA Report Number RD-65-30, Report EER 5-1, Avionics Research Group, Department of Electrical Engineering, Ohio University Research Institute, Ohio University, Athens, Ohio, May 21, 1965.

"Earth Cover and Contour Effects on Image Glide Paths, Phase III, Final Report," FAA Report Number RD-68-60, I, Report EER 5-7, Avionics Research Group, Department of Electrical Engineering, Ohio University, Athens, Ohio, September, 1968.

"Instrument Landing System Improvement Program, Final Report," SRDS Report Number RD-74-214, EER 5-20, Avionics Engineering Center, Department of Electrical Engineering, Ohio University, Athens, Ohio, December, 1974.

"Instrument Landing System Improvement Program, Fourth Interim Report," SRDS Report Number RD-73-137, Report EER 5-15, Avionics Engineering Center, Department of Electrical Engineering, Ohio University, Athens, Ohio, May, 1973.

"Instrument Landing System Improvement Program, Third Interim Report," SRDS Report Number RD-71-30, Report EER 5-11, Avionics Research Group, Department of Electrical Engineering, Ohio University, Athens, Ohio, October, 1971.

"Instrument Landing System Improvement Program, Third Interim Report, SRDS Report Number RD-72-71, Report EER 5-12, Avionics Research Group, Department of Electrical Engineering, Ohio University, Athens, Ohio, June, 1972.

McFarland, Richard H., J. T. Gorman, D. A. Hill, D. Luttermoser, and D. Miller, "Earth Cover and Contour Effects on Image Glide Paths, Phase II," FAA Report Number RD 66-39, Report EER 5-5, Avionics Research Group, Department of Electrical Engineering, Ohio University, Athens, Ohio, July, 1966.

Morehart, Jack, B., R. H. McFarland and David C. Hildebrand, "Snow Effects on Image Glide Path Systems, Winter of 1971-1972," FAA Report Number RD 72-85, Report EER 5-13, Avionics Engineering Center, Department of Electrical Engineering, Ohio University, Athens, Ohio, July, 1972.

IX. APPENDICES

A. Snow Data Collected at Houghton, Michigan, December 1974—May 1975.

December 1974

Date	Daily Snowfall (Inches)	Total Snowfall to Date (Inches)	Hi/Lo Temperature (°F)	Reflection Zone Snow Depth (Inches)	Snow-Bank Depth (Inches)	Monitor Alarm (Percent)	Capture Monitor Indications (Millivolts)	Glide Slope Angle (Degrees) Tower Measurement	Glide Slope Angle (Degrees) Flight Measurement	Comments
1	0	29.8	32/20							
2	0	29.8	32/20							
3	0	29.8	33/21							
4	0	29.8	29/18							
5	0.2	30.0	34/25							
6	0	30.0	35/29							
7	0.7	30.7	35/17							
8	3.3	34.0	17/12							
9	0.5	34.5	25/14							
10	0	34.5	34/23							
11	0	34.5	36/23							
12	0	34.5	31/22							
13	1.1	35.6	28/22							
14	0.9	36.5	32/25							
15	5.8	42.3	32/28							
16	2.4	44.7	30/19		14.5			2.59		
17	1.3	46.0	23/19	11	15.5			2.59		
18	T	46.0	24/18							
19	0.2	46.2	27/12	11	15.5	32		2.60		
20	1.4	47.6	29/23							
21	0.8	48.4	26/10							
22	3.5	51.9	30/4							
23	2.5	54.4	32/26	14	19.0	29		2.60		
24	1.6	56.0	28/23							
25	0.5	56.5	25/10							
26	0	56.5	36/10	13	16.5	5		2.60		
27	0	56.5	31/19							
28	0	56.5	38/23							
29	0	56.5	34/22							
30	0	56.5	33/17	12	15.0			2.63		
31	T	56.5	31/15							

January 1975

Date	Daily Snowfall (Inches)	Total Snowfall to Date (Inches)	Hi/Lo Temperature (°F)	Reflection Zone Snow Depth (Inches)	Snow-Bank Depth (Inches)	Monitor Alarm (Percent)	Capture Monitor Indications (Millivolts)	Glide Slope Angle (Degrees) Tower Measurement	Glide Slope Angle (Degrees) Flight Measurement	Comments
1	0.4	56.9	29/15							
2	2.5	59.4	28/9							
3	4.1	63.5	29/21	14.2	16.5	160		2.60	2.49	Alarmed Off
4	T	63.5	28/16							
5	T	63.5	27/17							
6	T	63.5	34/22	13.5	18.0	110		2.57		
7	T	63.5	33/25							
8	1.0	64.5	33/20							Plowed Zone
9	2.0	66.5	32/23	0		40		2.49	2.62FAA	Plowed Zone
10	3.6	70.1	35/30	5 (rain)				2.84		
11	3.8	73.9	38/-4							
12	9.6	83.5	3/-7							
13	3.1	86.6	8/-1							No Visibility
14	1.1	87.7	13/5	5	31.0			2.59		
15	7.0	94.7	16/10	7.5	25.5	60		2.58		
16	7.7	102.4	11/2							Windchill -28°
17	0.8	103.2	23/1	8.5	32.0			2.62		
18	2.3	105.5	28/17							
19	2.2	107.7	18/-4							
20	2.5	110.2	21/-5	7.0	34.5	48		2.71		
21	6.6	116.8	19/-1							
22	T	116.8	14/-4	10.5	37.0	57		2.86	2.67	
23	1.8	118.6	23/10	10.5	38.0	48		2.81		
24	1.6	120.2	31/12							
25	12.4	132.6	31/18							Alarmed Off
26	2.6	135.2	18/10							
27	1.7	136.9	20/17	14.0				2.70		
28	0.5	137.4	20/13						2.68	
29	4.5	141.9	19/4							
30	T	141.9	21/10							Plowed Zone
31				2.0	52.0			2.77		

February 1975

Date	Daily Snowfall (Inches)	Total Snowfall to Date (Inches)	Hi/Lo Temperature (°F)	Reflection Zone Snow Depth (Inches)	Snow-Bank Depth (Inches)	Monitor Alarm (Percent)	Capture Monitor Indications (Millivolts)	Glide Slope Angle (Degrees) Tower Measurement	Glide Slope Angle (Degrees) Flight Measurement	Comments
1	0.2	143.9	22/10		Snow Bank Increased From 52" to Approximately 60" During This Month.					
2	1.4	145.3	20/5			59		2.84	2.55	
3	T	145.3	21/4	2.0			-50	2.84	2.54	
4	T	145.3	32/17							
5	0.5	145.8	31/20							
6	8.7	154.5	22/6	3.0				2.82		
7	3.7	158.2	13/6							Tower Trouble
8	3.1	161.3	6/-4							
9	2.3	163.6	2/-5							
10	1.8	165.4	12/-10	6.0		50		2.82		
11	2.1	167.5	23/9							
12	10.7	178.2	19/5							
13	2.5	180.7	18/4	8.0				2.98		
14	T	180.7	29/15	13.5		67	-70	2.94	2.64	
15	0.3	181.0	28/18							
16	0.3	181.3	28/19							
17	0.3	181.6	29/15							
18	2.2	183.8	30/24	9.0		75		2.82		
19	T	183.8	31/12	0		59	-65	2.82	2.64 2.63FAA	Alarmed Off Plowed
20	0	183.8	36/12	0				2.80		
21	0	183.8	40/18	0			-138	2.85	2.66	
22	T	183.8	36/30							
23	T	183.8	35/29							
24	T	183.8	31/27							
25	6.0	189.8	32/24							High Winds
26	5.4	194.4	24/15							High Winds Low Visibility
27	0.8	195.2	25/13	5.0				2.83		
28	1.8	197.0	20/13	14.0				2.84		

March 1975

Date	Daily Snowfall (Inches)	Total Snowfall to Date (Inches)	Hi/Lo Temperature (°F)	Reflection Zone Snow Depth (Inches)	Snow-Bank Depth (Inches)	Monitor Alarm (Percent)	Capture Monitor Indications (Millivolts)	Glide Slope Angle (Degrees) Tower Measurement	Glide Slope Angle (Degrees) Flight Measurement	Comments
* 1	3.9	201.7	19/15							
2	6.9	208.6	19/14							
3	0.4	209.0	20/10							
4	T	209.0	29/9							Plowed Refl. Zone
5	T	209.0	35/18							
6	T	209.0	33/22							
7	T	209.0	28/17	0			-64		2.59	Flight
8	T	209.0	17/8							
9	T	209.0	22/8							
10	0	209.0	24/4	0			-64		2.65	Flight
11	T	209.0	35/11							
12	3.9	212.9	30/16							
13	0.5	213.4	20/10	6.0				2.83		Tower
14	0	213.4	35/6	3.0			-55	2.83	2.64	Flight
15	0	213.4	45/19							
16	0	213.4	44/22							
17	0	213.4	49/25							
18	0	213.4	47/34	0				2.91		Tower
19	0	213.4	45/30							
20	0.5	213.9	35/28							
21	T	213.9	37/28							
22	0.5	214.4	35/26							
23	1.5	215.9	26/22							
24	10.8	226.7	25/13							Storm
25	4.7	231.4	14/11							Storm
26	0.2	231.6	20/10							
27	T	231.6	26/20							40-50 MPH Wind
28	1.0	232.6	34/24							High Winds
29	1.9	234.5	32/19		67" max.					
30	3.6	238.1	19/10							
31	0.5	238.6	22/10							

April 1975

Date	Daily Snowfall (Inches)	Total Snowfall to Date (Inches)	Hi/Lo Temperature (°F)	Reflection Zone Snow Depth (Inches)	Snow-Bank Depth (Inches)	Monitor Alarm (Percent)	Capture Monitor Indications (Millivolts)	Glide Slope Angle (Degrees) Tower Measurement	Glide Slope Angle (Degrees) Flight Measurement	Comments
1										
2										
3					71" max.		-80	2.97		
4										
5										
6										
7				0			-76		2.77	
8										
9										
10				0			-100		2.80	
11										
12										
13										
14										
15				0			-360		2.79	

May 1975

Date	Daily Snowfall (Inches)	Total Snowfall to Date (Inches)	Hi/Lo Temperature (°F)	Reflection Zone Snow Depth (Inches)	Snow-Bank Depth (Inches)	Monitor Alarm (Percent)	Capture Monitor Indications (Millivolts)	Glide Slope Angle (Degrees) Tower Measurement	Glide Slope Angle (Degrees) Flight Measurement	Comments
6					0				2.51	
8					0				2.55	

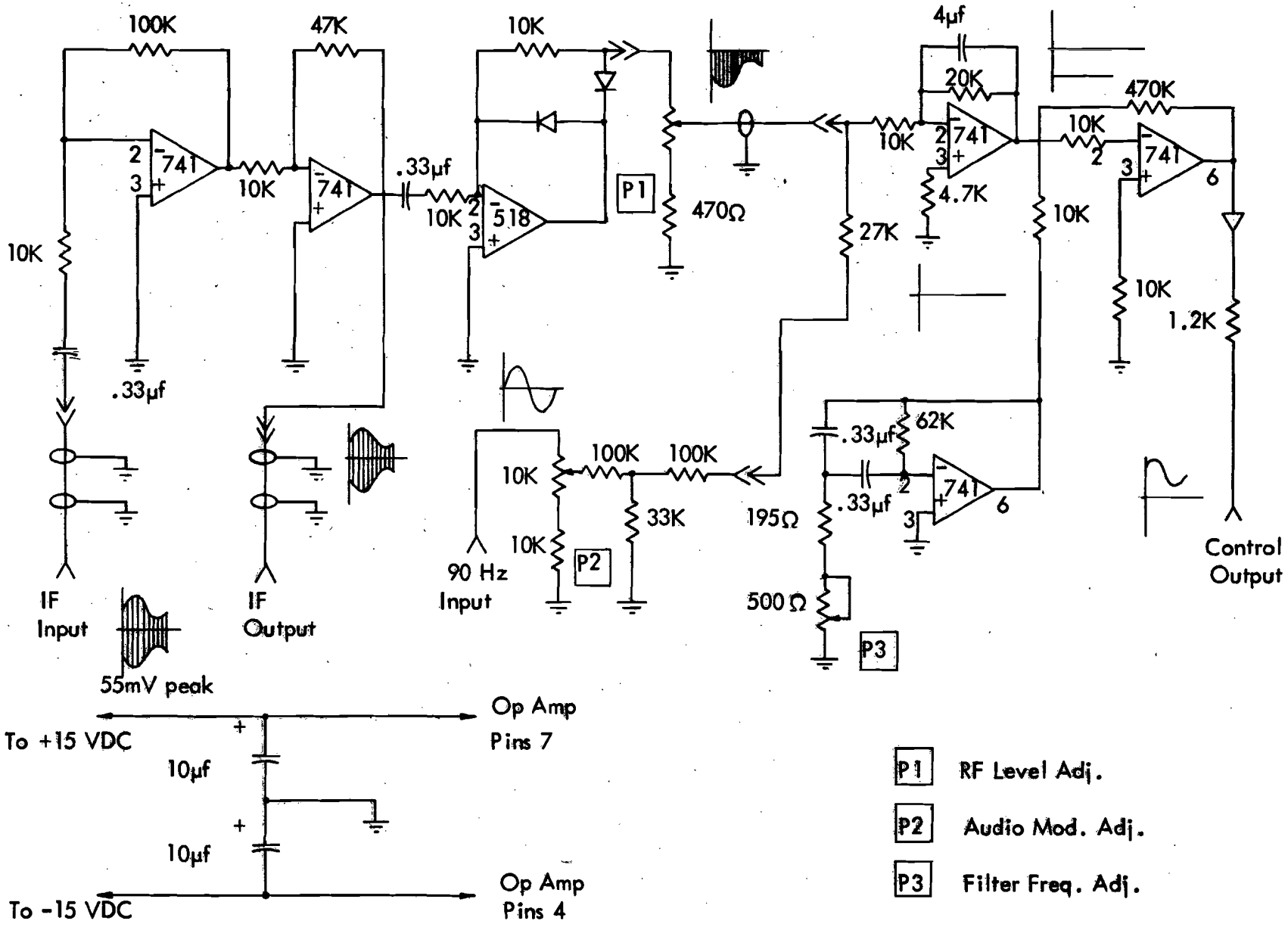

Figure B-1. RF Amplitude Control and Linear Modulator Circuit Schematic Diagram.

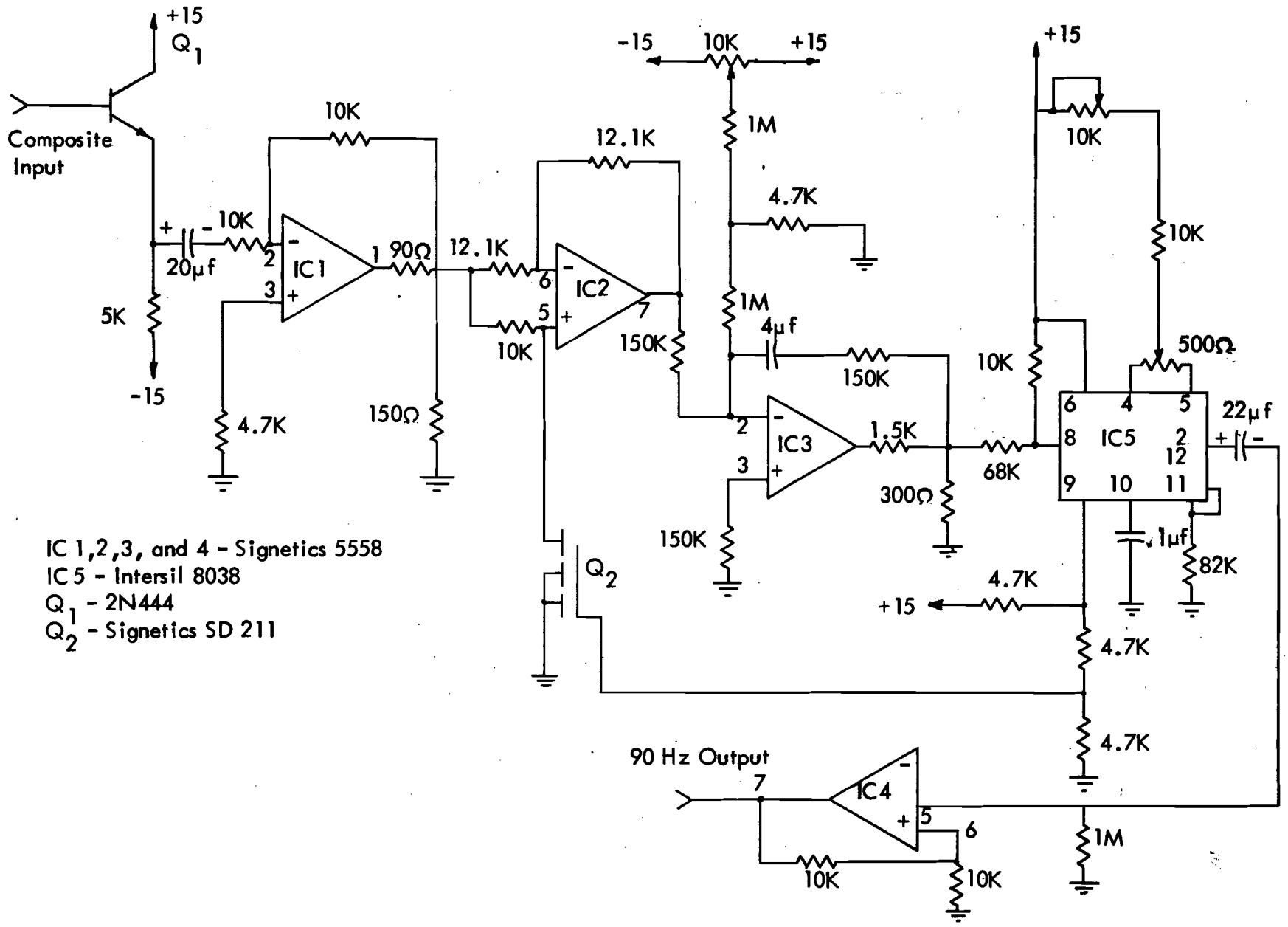

Figure B-2. Phase-Locked Loop 90 Hz Generator Schematic Diagram.