COPY 1

Report No. FAA-RD-75-11

FAA WJH Technical Center
00090252

NAFEC
LIBRARY
MAY 20 1975
RECEIVED

RELIABLE LINE SIGNALING TECHNIQUES FOR THE FAA GRN-27(V) AND CAT-III ILS

Bass, S.C. Belter, S. Chen, S.C.
Findakly, T. Greenblatt, C. Hwang, H.
Leon, B.J. Peele, W. Petroski, P.
Williams, C.

March 1975

Interim Report

Document is available to the public through the
National Technical Information Service,
Springfield, Virginia 22151

Prepared for

U.S. DEPARTMENT OF TRANSPORTATION
FEDERAL AVIATION ADMINISTRATION
Systems Research & Development Service
Washington, D.C. 20590

lation
alling Techniques for the
T-III ILS, by S.C. Bass
port. West Lafayette,

(RD-75-11)
A-3518

2. AN/GRN-27(V).
trument Landing Systems.
6. Signaling Tech-

sponsorship of
interest of infor-
rnment assumes no
f.

Purdue Research Foundation
Reliable Line Signaling Techniques for the FAA GRN-27(V) and CAT-III ILS, by S.C. Bass (et al). Interim Report. West Lafayette, Ind., March 1975.

76 p. (RD-75-11)
Contract No. FA74WA-3518

1. Lightning Protection. 2. AN/GRN-27(V). 3. Category III. 4. Instrument Landing Systems. 5. Noise Suppression. 6. Signaling Techniques. I. Bass, S.C.

Technical Report Documentation Page

1. Report No.	2. Government Accession No.	3. Recipient's Catalog No.
FAA-RD-75-11		

4. Title and Subtitle	5. Report Date
Reliable Line Signaling Techniques for the FAA GRN-27(V) and CAT-III ILS	March 1975
	6. Performing Organization Code
7. Author(s) (See item 15)	8. Performing Organization Report No.
9. Performing Organization Name and Address Purdue Research Foundation School of Electrical Engineering Purdue University West Lafayette, IN 47907	10. Work Unit No. (TRAIS)
	11. Contract or Grant No. DOT-FA 74WA-3518
12. Sponsoring Agency Name and Address Department of Transportation Federal Aviation Administration Systems Research and Development Service	13. Type of Report and Period Covered Interim Report 1 July 74 - 31 December 74
	14. Sponsoring Agency Code ARD 321

15. Supplementary Notes

S. C. Bass, S. E. Belter, C. L. Chen, T. Findakly, C. Greenblatt, H. Hwang, B. J. Leon, W. Peele, P. Petroski, C. Williams

16. Abstract

The purpose of these investigations is to reduce the effect of power line transients and lightning interference on solid state equipment. Specifically, this effort is directed toward protection of the GRN 27(V) and the FAA MARK III type Instrument Landing Systems. This report covers Phase I of the program. An overview of the problem and its solution is provided followed by the detailed analytical, experimental and design work that supports proposed system changes. The heart of these recommended system changes consists of changing the method of signaling from unblanced, non-isolated to a blanced, isolated configuration with tone signaling. The recommendations are to be implemented and tested at NAFEC during Phase II of the contract.

17. Key Words		18. Distribution Statement
Tone Signaling Lightning Protection Noise Suppression Signaling Techniques Surge Protection	Instrument Landing System Balanced Communications	Document is available to the public through the National Technical Information Service, Springfield, Virginia 22151.

19. Security Classif. (of this report)	20. Security Classif. (of this page)	21. No. of Pages	22. Price
Unclassified	Unclassified	76	

Form DOT F 1700.7 (8-72) Reproduction of completed page authorized

BIOGRAPHIES

Steven C. Bass received the M.S.E.E. and Ph.D. degrees in 1968 and 1971 in the areas of digital design and nonlinear circuit theory, respectively, from Purdue University. In June 1971 he joined the staff of the School of Electrical Engineering at Purdue University as an Assistant Professor. Since 1967 he has consulted for outside firms in the areas of digital process control, linear signal processing, computer-aided analysis and design, and digital filtering. His research interests include nonlinear modeling and computer-aided design.

Stephen E. Belter received the B.S. and M.S. degrees in electrical engineering from Purdue University in 1973 and 1974, respectively. He is currently pursuing advanced degrees in computer science and electrical engineering. His research activities and interests are in the areas of computer-aided design and broadcasting. He has done consulting for Magnavox Co., North Electric Company, and Admiral Corp. He is a member of Tau Beta Pi, IEEE, AES, and the Society of Broadcast Engineers.

Chin-Lin Chen received the B.S.E.E. degree from National Taiwan University, Taipei, Taiwan, China, in 1958; the M.S. degree from North Dakota State University, Fargo, N.D., in 1961, and the Ph.D. degree from Harvard University, Cambridge, Mass., in 1965. From 1965 to 1966 he was a Research Fellow in the Division of Engineering and Applied Physics, Harvard University. In 1966, he joined the School of Electrical Engineering, Purdue University, as an assistant professor. He is now an associate professor of Electrical Engineering. His research interests are in the areas of scattering and diffraction of electromagnetic waves, antenna radiation, surface acoustic wave devices, ultrasonics, transient protection devices, and the application of interactive computer graphics in electrical engineering education. Dr. Chen is a member of Sigma Xi, Eta Kappa Nu, and IEEE and the American Society for Engineering Education. Since 1966, he has been a reviewer for the IEEE Transactions on Antennas and Propagations.

Talal Findakly received the B.Sc. in Electrical Engineering from the University of Baghdad, Baghdad, Iraq, in June, 1968; the M.S. in Electrical Engineering from Tufts University, Medford, Mass., in July, 1974. He was a radar engineer with the Iraqi Air Force from July 1968 to February 1971. He was a seismic instruments engineer with the Iraqi National Oil company from March 1971 to December 1973. From March to July, 1973, he was a part-time research engineer with the Microwave Research Corporation, North Andover, Mass. He joined the School of Electrical Engineering at Purdue University on a Ph.D. program in August 1974. He is a student member of the IEEE.

Clifford Greenblatt received a B.S. degree in Electrical Engineering from Case Western Reserve University in May 1974. He holds an Engineer in Training license from the State Board of Registration for Professional Engineers and Surveyors in the state of Ohio. He is a member of the IEEE, Theta Tau, and Eta Kappa Nu. He is presently working on his M.S. in Electrical Engineering at Purdue University.

Howard Hua-kuang Hwang studied Electrical Engineering in the National Taiwan University from 1967 to 1971. After graduation, he served in the Chinese Air Force for two years. He then worked in Philips Taiwan Ltd. He came to Purdue for graduate study in August 1974.

Benjamin J. Leon received the B.S. degree from the University of Texas (1954), the S.M. degree (1957) and Sc.D. degree (1959) from the Massachusetts Institute of Technology. He joined the faculty of Purdue University as Associate Professor of Electrical Engineering in 1962 and advanced to Professor in 1965. Prior to his affiliation with Purdue University, he was on the staff of Lincoln Laboratories (M.I.T.) and Hughes Research Laboratories. He has consulted with Components Corporation and spent the summer of 1965 at the Bell Telephone Merrimack Valley Laboratories. From 1964-73 he was the Consulting Editor for the Holt, Rinehart and Winston, Inc. In addition to supervising graduate thesis work at the M.S. and Ph.D. level, Dr. Leon has published some three dozen papers, two books, and several book chapters. He holds a U.S. patent. He is a past editor (1967-69) of the IEEE Transactions on Circuit Theory and past chairman of the Circuit Theory Group of the IEEE. He is a Fellow of the IEEE and a member of AAAS, AAUP, Tau Beta Pi, Eta Kappa Nu, Sigma Xi, and Phi Eta Sigma.

Warren D. Peele was Associate Professor of Electrical Engineering and Executive Officer of the Department of Electrical Engineering at the U. S. Air Force Academy. He joined the Purdue University, School of Electrical Engineering as a professional staff engineer in July 1971 after receiving the B.S.E.E. degree (1964) and the M.S.E.E. degree (1965) from the University of Colorado. During his tenure at the Air Force Academy, he served as Project Engineer on the Post-Doctoral Program with research interests in synthesis and evaluation of communications-electronics systems. He was with ESD during the design and implementation of the NORAD Cheyenne Mountain Complex after serving eight years as an aircraft commander and pilot in SAC. Since 1970 he has worked in the areas of electromagnetic pulse and lightning protection. He is a senior member of the Institute of Electrical and Electronics Engineers, Armed Forces Communications Electronics Association, Eta Kappa Nu, and Tau Beta Pi.

Peter Petroski received a B.S.E.E. degree from Worcester Polytechnic Institute in June 1974. He is a member of Eta Kappa Nu, and he was student branch chairman of the IEEE during his senior year at W.P.I. He holds an Engineer in Training Certificate from the state of Massachusetts. He is currently enrolled as a master's degree student in electrical engineering at Purdue University.

Craig Williams received the B.S. degree in electrical engineering and the M.S. degree in electrical engineering at Purdue University in 1971 and 1973, respectively. During the summer months from July 1968 to June 1971, he was employed at Naval Avionics Facility at Indianapolis (NAFI) as a draftsman and technical writer. After graduating with a B.S. in June 1971, he continued to work at NAFI as an electrical engineer until August 1973. This included work on a weather radar system and the analysis and testing of boards in a digital communications system. During the summer of 1973 he worked at the Naval Electronics Laboratories at San Diego as an Engineer-on-Loan. This work was concerned mostly with the design of hardware-software interfacing between a microprocessor and various system components in a digital communication system. He is currently working toward a Ph.D. in electrical engineering at Purdue University.

TABLE OF CONTENTS

I. INTRODUCTION..... 1

A. Background..... 1
B. Problem-Solution Overview..... 1
C. The Present CAT-III ILS Signaling System..... 2
D. Failure Data Analysis..... 4

II. THE INTERFERENCE PROBLEM AND CORRECTIVE ACTION..... 9

III. SIGNALING ON COMMUNICATION LINES..... 19

A. DC Signaling on Balanced Pairs..... 19
B. Tone Signaling Techniques..... 19
C. Modems with an AC Carrier..... 21

IV. PROPOSAL FOR PHASE II..... 23

A. General..... 23
B. The Proposed Signaling System..... 23
C. Advantages of the Proposed Signaling System..... 25
D. Laboratory Testing..... 26
E. Computer Simulation..... 27
F. Preparatory Trip to NAFEC..... 27
G. Installation..... 28

V. APPENDICES..... 30

A. Noise Coupling..... 30
B. Results of Computer-Aided Circuit Simulations..... 46
C. The Proposed Tone Signaling System..... 59
D. Automated Tester..... 68

I. INTRODUCTION

A. Background

This investigation of the effects of transients on control and power lines of the FAA MARK III type ILS and recommendation for design changes is Phase I of a two-phase program to develop and test system design modifications in order to eliminate the effects of lightning induced transients on system operation.

In order to avoid repetitious approaches to the problem, we have reviewed other related efforts [Ref. 9] in order to evaluate a wide spectrum of potential solutions. Our investigation of an operable system was made at the Atlanta Airport. In reviewing the installation and documentation it was noted that balanced or isolated lines were not used in the CAT III system. This is quite unusual since such methods have been widely used throughout the communications industry for many years to provide noise suppression. We discussed the idea of converting control lines to a balanced set up with Mr. Earl Smith, Navigational Aids Sector Chief, at the Atlanta Airport; and he stated that this was one of their plans if it turned out that their present lightning protective schemes were not adequate. While the people at Atlanta are apparently operating satisfactorily with the present system, failure data indicate that transient problems were still evident as late as July, 1974. For example, there are three DDM lines running from the FFM to the localizer which have been found to be unusable and we suspect that the reason is because of noise corruption of these signals. Failure reports also indicate serious problems at NAFEC.

During the course of Phase I of the contract, we have performed extensive analytical work, computer simulation, experimental cable testing, and system design. This work has provided us with information that supports the conclusion that significant noise reduction can be obtained by the techniques discussed in this report

B. Problem-Solution Overview

The problems with lightning induced transients that have plagued the GRN 27 CAT II and the new MARK III ILS systems occur because the design does not use adequate techniques for signaling over buried cables. These techniques are well-known and have been standard in the telephone industry for over thirty years.

When lightning strikes the ground up to 90 or more coulombs of charge are injected into a small area in less than a second.

The instantaneous current can reach 200,000 amperes. As this charge diffuses into the earth, nearby buried cables are like long, low frequency antennas

that pick up the waves. Pulses of over 1,000 volts peak amplitude can be induced in such cables. The presence of several parallel conductors, the case where a guard is placed above the cable, may help in reducing the induced pulse, but the reduction is quite minor. Large pulses still propagate to the signal cable sheath.

Because of the large effect just described and other lesser interference effects caused by atmospheric electricity, power line induction, etc. as discussed in section II and Appendix A below, several rules are followed in the telephone industry. They are:

1. Signal only on balanced pairs inside a conducting sheath.
2. Twist the pairs slowly to change the orientation with respect to external field vectors.
3. Separate ground connections so that boxes connected by cables do not form large low impedance ground loops and so that a local rise in ground potential does not affect the entire system.
4. Use AC signaling wherever practical.
5. At every junction box, fix up the impedance to maintain balance.

None of these rules are followed by the TI system. The cost of converting the signaling of the MARK III ILS to a system that satisfies all these rules is about $5,000. This is only about double the cost of adding protective devices in the hope that they can prevent failures. For new systems, the cost differential should be less. Furthermore, the proposed system uses fewer wires on the underground cables. Thus, on new installations, the cost of the system proposed herein may actually be less than installing the present system with protective devices.

C. The Present CAT-III ILS Signaling System:

A typical example of the signaling system in the MARK III system is shown in Figure 1. We use a signal line running between the remote control panel (at the control tower) and the glide slope to be specific. Presently, CAT-III signaling is done by the making or breaking of a return path for a 28 VDC supply voltage. The path completion is handled by a relay located at the glide slope. If this path <u>is</u> completed at the glide slope, DC current will flow back to the common-emitter switching transistor (2N2222A). This transistor can then turn on. The output voltage v_o will then indicate the distant contact closure by dropping to a low voltage. If the return path is <u>not</u> completed, the transistor will receive no base current stimulation. Thus, v_o will remain high. v_o can then trigger SONALERT's, panel lights, or digital switching circuitry for further processing.

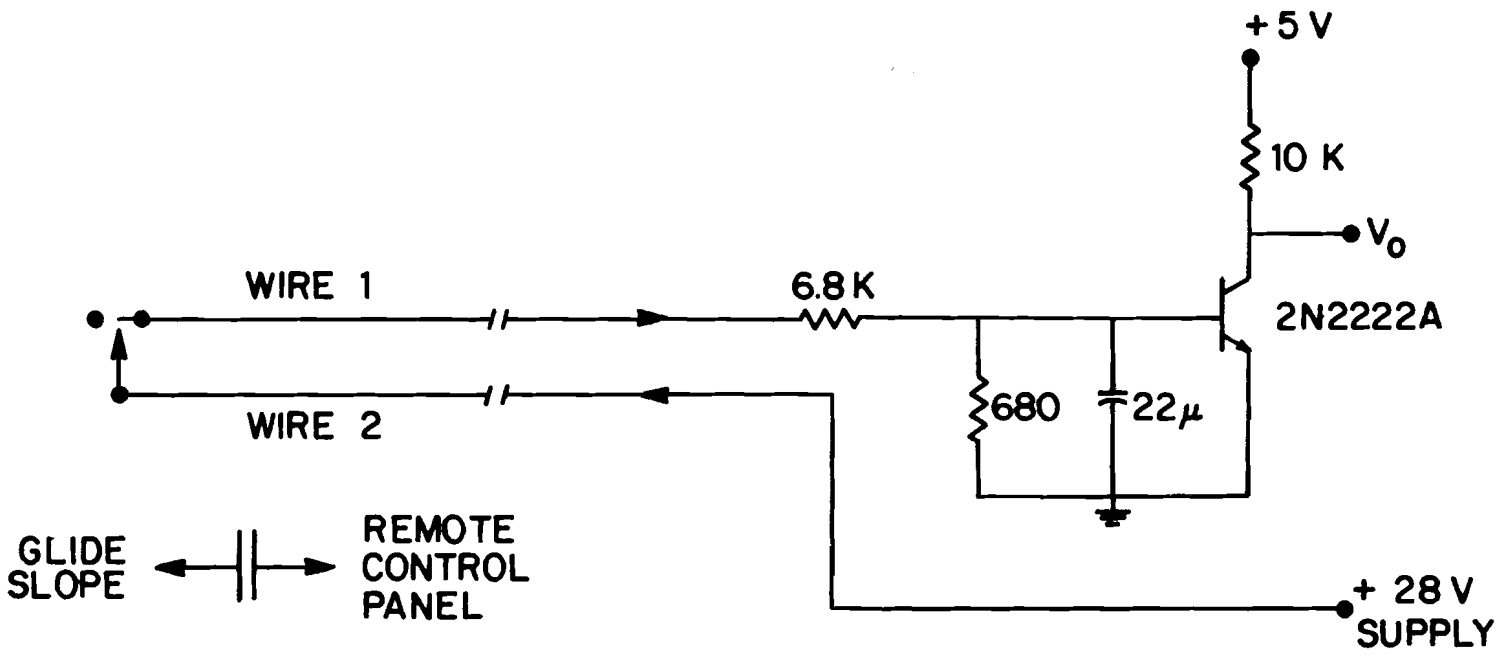

FIG. 1 THE PRESENT CAT-III SIGNALING SYSTEM

Lack of balancing is the most serious single deficiency in the CAT-III signaling system. The imbalance is evidenced by the fact that wire #1 is connected indirectly to ground through roughly a 7 KΩ resistance, while wire #2 is tied to ground through a very low impedance power supply (no more than a few ohms impedance). Thus, this system is subject to all the common-mode imbalance problems mentioned in section II below. Clearly these imbalances can very easily generate false differential signals that will momentarily engage the switching transistor circuitry as well as any other devices tied to it.

The next most serious problem is the fact that there is a direct metal contact between the grounds of the various system components through the sheath. Without some sort of common-mode isolation, even a perfectly balanced line can present large common-mode voltages to a terminator. These voltages can easily damage terminator components. Further, common-mode voltages generated at the terminator by a ground potential rise because of lightning will be allowed to drive large currents from one terminator to the terminator at the other end of the line. Since there is common-mode continuity throughout a CAT-III signal line, all these problems can appear (and probably already have appeared) in the ILS system.

To compound the above problems the ILS design has an exposed power supply. One of the signal lines leaving the remote control panel is tied directly to the 28 volt power supply. This line is, in turn, a several-mile-long antenna on which can appear very large voltages and currents. This is, of course, bad enough. However, when one considers that this noise-corrupted power supply directly powers literally hundreds of other components within the remote control panel, it is not difficult to see why component burnout could occur at scattered locations throughout the panel. If DC level signaling is to be used at all, certainly some sort of buffer or noise suppression circuit should have been installed between the exposed line and the common 28V power supply. However, none exists in the CAT-III system as it now stands.

D. Failure Data Analysis

A number of failures reported to us obviously are directly related to thunderstorms. There is no evidence that the system, i.e. specifically the control and remote monitor indication techniques, does not work well at all other times. We believe that the corrections proposed are adequate to eliminate the possibility of further damage and nuisance upset of the type experienced to date from short transient interference of direct lightning hits on the equipment. Further, it is unlikely that equipment redesign would

yield comparable results or be cost effective; therefore, a significant effort to reduce transient interference by this approach does not appear to be justified. The number of failures reported so far is not large enough to allow for any type of analysis other than a judgment on a case-by-case basis. Already many signal and control lines in the buried cables are connected directly to 28-volt power supplies. All other power is derived from these 28-volt supplies. We believe that all storm related failures can be traced to transients on the main 28-volt supplies.

One might wonder if the ac power lines might not also be a conduit for lightning induced transients. The coupling of the AC to the system is through battery chargers. These chargers are very rugged, and they have considerable stray inductance and capacitance. Thus, transients are smoothed considerably. The charger then drives a battery which, in turn, powers the system. The battery is a very good filter. On August 1, 1973, there was an alarm on the battery chargers at the localizer. Both chargers had to be reset. This indicates a direct hit on the power line. The report we received indicates that the batteries kept the system in operation without incident. This indicates that even the most severe transient on the AC will not hurt the ILS operation. Thus, no additional protection seems to be needed on the power line interface.

A catalog of apparent lightning related failures reported to us by subsystem, with comments, is as follows:

A. Localizer: Failures at Atlanta

July 3, 1974	Facility notamed off due to lightning from thunderstorms causing numerous cycle changes and shutdowns, unreliable,
Comment:	Lightning induced pulses on the cycle RC telephone line could cause this problem. On every other cycle pulse both transmitters are off for a period of 20 seconds.
Feb. 2, 1974 Dec. 31, 1973	On both these dates the localizer shutdown during heavy thunderstorming and would not reset from the remote point.
Comment:	Shutdown may have been caused by pulses on the telephone lines from the FFM ordering a station shutdown. There is insufficient information as to why the system could not be reset.
Aug. 2, 1973	Abnormal power/environmental alarm on eighth floor. System abnormal with AC power fail indicators on. This occurred while a bad thunderstorm was passing through the area.
Comment:	Both battery chargers had to have their AC fail switches reset. The schematics for the battery chargers were not

included in the localizer documentation; it is assumed lightning on the AC power lines caused the problem. Also, it appears that the batteries were able to keep the localizer operating.

Aug. 7, 1973 IC's U3-4; C on the Power/Environmental board and IC's U13-15 on the Alarm Time delay board were damaged by lightning.

Comment: None of the damaged components are directly connected to external control lines. They both have a +12VDC power supply in common. The +12VDC is derived from the +28VDC that runs over telephone lines to the FFM and the RC. It is likely that lightning can affect the +12V supply in this way. Studies are continuing to verify this conjecture.

B. Far Field Monitor:

Dec. 30, 1973 U13 on the analog circuit card for monitor number 2 was damaged during a severe thunderstorm.

Comment: U13 is imbedded in the middle of a large circuit with U20 at one end tied to the DDM line in the buried cables. If lightning caused the damage, it is unclear how it reached this particular IC and no others that would seem to be in the path of a lightning induced transient. All IC's on this card use ± 12VDC for their supplies. The study of the coupling from the 28-volt to the 12-volt supply may shed more light on the exact coupling from various cables to U13.

Sept. 12, 1973 All 3 monitors had IC's damaged on the analog circuit card. U20 was damaged on all monitors and U1, U11 on one monitor as well.

Oct. 29, 1973 Two monitors had IC's damaged on the analog circuit card. U11, U13, on one monitor and U9, U11, U12, U13 on the other monitor were damaged.

Comment: U20 is connected to the buried telephone cables that send a DDM signal to the localizer from each monitor. Probable cause of damage to this IC is a lightning induced transient in the line. The supplies to all IC's damaged are ± 12VDC. Since the other IC's are imbedded in the circuitry of the analog circuit card, it is not clear what path lightning induced transients may have taken to cause the damage.

Date Unknown	The logic circuit card had unspecified damage.
Comment:	There is insufficient information to determine cause of damage.

C. Remote Control and Monitor Panels:

July 3, 1974	Facility notamed off due to lightning in thunderstorm causing numerous cycle changes and shutdowns, unreliable.
Comment:	Lightning induced noise on control lines could cause cycling and alarms.
Feb. 2, 1974 Dec. 31, 1973	Facility shutdown and will not reset
Comment:	See comment for 7/3/74. Insufficient data provided to determine why the system would fail to reset, but lightning induced noise could also do this.
Sept. 10, 1973	Facility failed.
Comment:	See comment for 7/3/74.
Aug. 7, 1973	System failed. P/E board, Alarm Time and Delay board replaced to repair problem.
Comment:	Insufficient data provided but lightning induced surges on control lines could cause failure of components on both boards either directly or through the power supply

Failures at NAFEC

Date(s) Unknown	Failure of power supply, performance, and intercom/interlock cards.
Comment:	No other information provided, see comment 8/7/73.

D. Glide Slope

6/13/73	Relay R3 of remote performance card damaged.
Comment:	Relay damage was probably due to lightning induced current from underground cables to remote control station.
9/12/73	A2, A6, and F1 of control unit power supply damaged.
Comment:	These components would be expected to fail from a large transient on line connected directly to the supply.
9/12/73	U10 on logic boards of clearance-1, near field-1, clearance-3, course-2, and sense-3 monitor logic circuits were found damaged.
Comment:	Nand gate V10A is the general inhibition input which is connected to the +12 volt supply. The +12 volt supply is suspected to be responsible.

10/29/73	Q2, Q12, U10, and V12 of control and inhibition card were found damaged.
Comment:	Again, lightning induced voltage propagation into +12 volt power supply is suspect in all these component failures. Two gates of V10 and one gate of V12 have an input connected to the +12 volt supply through a 1k resistor. The collectors of transistors Q2 and A12 are connected to the +12 volt supply through a 1k resistor so damage resulting from collector-base junction breakdown is suspected.
10/29/73	Transistor Q4 of control unit power supply failed.
Comment:	See discussion of power supply related problems.
10/29/73	Diodes CR-3, CR-4, CR-22 of remote performance card failed.
Comment:	It is believed that destructive currents reaching the above diodes originate from the +12 volt supply through R41 of the control and inhibition circuit card via the I_{MAIN} connection.

E. Marker Beacons

9/16/74	The Inner and Middle Markers were found in STBY on 9/16/74. The recording showed the Middle Marker transfer occurred during a very light rainfall on 9/14/74. The Outer Marker, modified similar to the Atlanta facility, remained up on Main all week.
Comment:	Lightning induced pulses in the remote control cables are the most likely cause for the unintentional Inner and Outer Marker mode change. The Atlanta modifications are lightning protective to the above hypothesis. Thus, it was considered reasonable to choose the transistor switching circuit used in the remote control tower as a starting point for computer simulation of lightning effects. Transistor switching in the Marker beacon due to lightning is the most probable cause for this failure, and it was decided that the computer simulation would give insight into some of the other lightning induced switching problems found in the various parts of the CAT III system.

II. THE INTERFERENCE PROBLEM AND CORRECTIVE ACTION

Balanced Lines:

As discussed in more detail below, there is no way to prevent the sheath of a cable and ground from developing potential swings during lightning induced transients. The effect of these transients on a system can be minimized by signaling on pairs of wires that are balanced with respect to ground.

To see how balancing works, consider the general signal line situation of Figure 2. As a conceptual experiment, suppose we were to break into the signaling cable at some arbitrary point along its length. We then create two new electrical ports as shown in wire #1 and also in wire #2. Both ports will use ground as their second wire. Having done this, we could certainly measure the impedances seen looking into each of these two ports. Call them Z_1 and Z_2, respectively. Then, we make the following definition:

A signal line pair is said to be "balanced" if, at <u>every</u> point along its length, the impedances Z_1 and Z_2 are equal.

The importance of balancing can be discussed using Figure 3. Here, at some arbitrary point along the cable's length, we suppose noise to be injected by some fictitious noise source, V_N. No noise source is capable of delivering infinite power, so we assign some nonzero source impedance to V_N, and call it Z_N. Now since the two signal conductors are in such close proximity, it is reasonable to suppose that they will be exposed to almost identical noise sources of identical source impedances.

Obviously these noise sources will induce <u>some</u> noise voltages onto wire #1 and #2. If these induced noise voltages were identical, clearly the <u>differential</u> voltage between wire #1 and wire #2 would be unaffected. That is, no noise could be observed <u>between</u> the two signal wires. Thus, if terminator #1 and/or #2 were sensing only this voltage difference (rather than their independent "common mode" voltages with respect to ground), the effect of the noise sources would be nullified. Of course, all this depends upon the two induced noise voltages being equal. But since the two noise sources are nearly identical, all we need to do to guarantee equal <u>induced</u> voltages is to arrange for the two impedances Z_1 and Z_2 to be equal (see Figure 3.) In other words, arrange for our signal line to be balanced. It is for this reason that telephone signal wires are operated <u>exclusively</u> in the balanced mode.

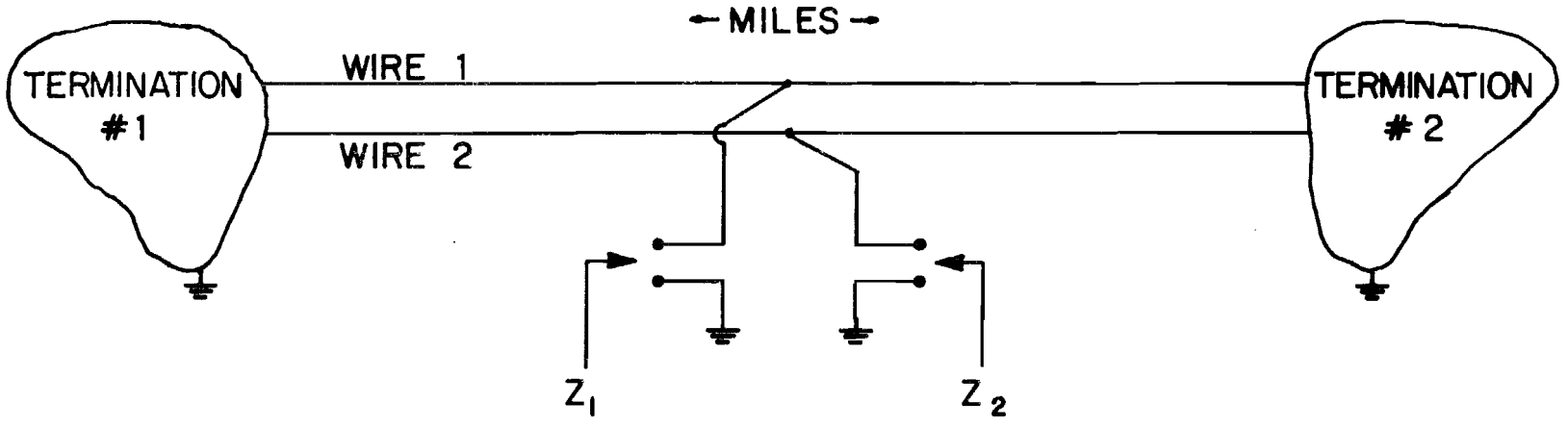

FIG. 2 THE CONCEPT OF SIGNAL LINE BALANCING

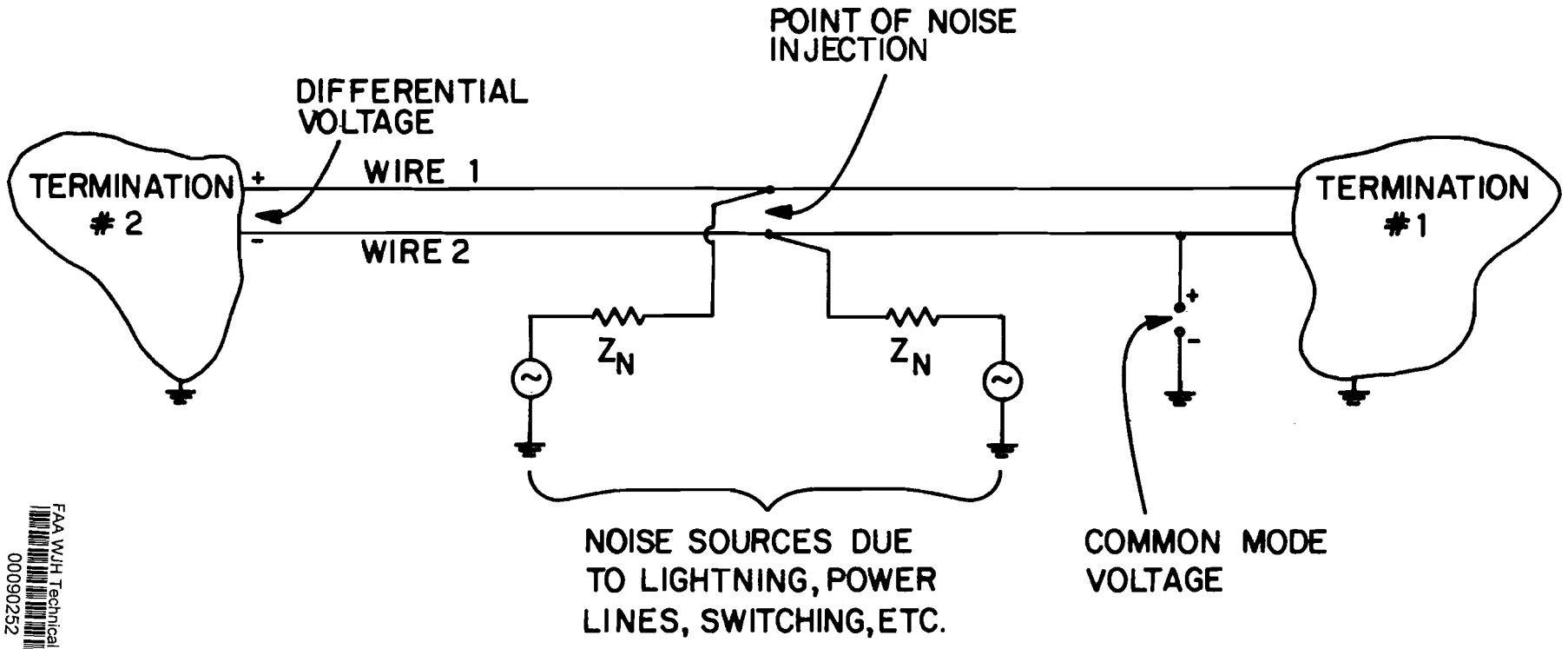

FIG. 3 THE EFFECT OF NOISE SOURCES ON BALANCED SIGNAL LINES

FAA WJH Technical Center
00090252

Twisted Pairs:

Though the two signal conductors of Figure 2 are in close proximity, they can extend over lengths of several miles; thus, together with the two terminators, they form a loop of very large cross-sectional area. Since spurious magnetic fields are free to pass through this loop, a noise current will be established in the signal loop by simple magnetic induction coupling. That is, the signal wire loop acts as a one-turn loop antenna. This noise current will induce differential noise voltages at either terminator.

To minimize the effect of this noise mechanism, one can seek to reduce the loop cross-sectional area by twisting the two signal wires. Though the total area may not be reduced significantly, the area has been broken up into many small areas of alternating sense with respect to the external magnetic field. Thus, two successive loops will have induced currents of opposite direction and will thus cancel out. This cancellation applies to fields caused by atmospheric electricity and to fields from power lines.

Isolation:

If a large common-mode voltage does appear on the two signal lines, as discussed in Balanced Lines above, for example, then the terminators will not see this as a differential signal voltage, and hence it should not cause false signaling. However, large common-mode voltages (with respect to ground) can damage circuit components located within these terminations. The use of an isolation transformer, as shown in Figure 4, mitigates this problem by passing only differential voltages. Large common-mode voltages are electrically insulated from the terminating components. This since the voltage to ground on each wire (common mode voltages) can cause no differential current to flow through the transformer primary. Only primary voltage differences will be magnetically coupled to the secondary.

Drainage Transformers:

As a second line of defense against the destructive effects of common-mode voltages, a so-called "drainage transformer" may be used. (See Figure 5.) Here, existing voltages on either wire (with respect to ground) can cause current to flow through the transformer winding to ground. For example, a common-mode voltage on wire #1 (V_1) will cause I_1 to flow. I_1 will, in turn, induce a negative V_2 (via transformer action). Hence, I_2 will also flow. Similarly, a common-mode voltage on wire #2 will encourage I_1 to flow. Thus, we see that the transformer

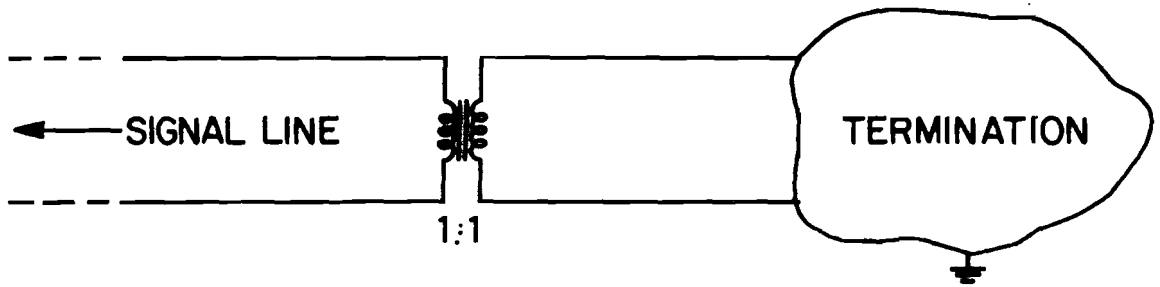

FIG. 4 THE USE OF AN ISOLATION TRANSFORMER TO INSULATE TERMINATOR COMPONENTS FROM LARGE COMMON-MODE SIGNAL LINE VOLTAGES

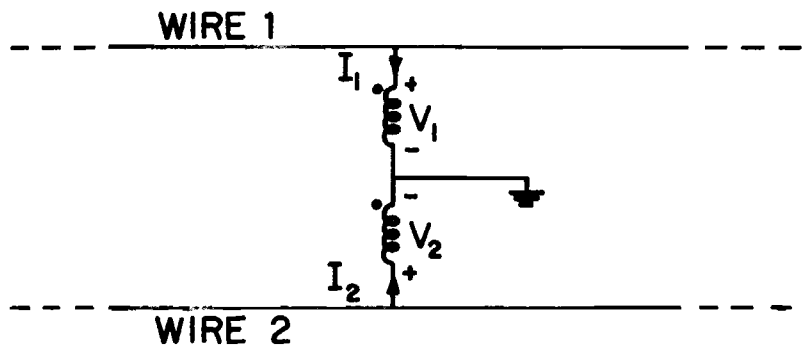

FIG. 5 USING A DRAINAGE TRANSFORMER TO "BLEED" COMMON MODE VOLTAGES TO GROUND

causes common-mode voltages actually to help each other drive unwanted current to ground. Clearly this "bleeding" action will attenuate the common-mode voltages by shunting them to ground.

However, the drainage transformer has little or no effect on differential voltages. To see this, suppose a perfectly differential voltage appears between wires #1 and #2 so that $V_1 = -V_2$. The existance of $V_1 \neq 0$ causes I_1 to flow. I_1, in turn, generates a negative V_2. That is, the voltage on wire #2 will actually drive more negative in response to a bleeding of wire #1. By reversing the argument, we find that any bleeding of wire #2 will actually cause V_1 to rise further. Thus, the drainage transformer acts as an open circuit as far as differential voltages are concerned. There is, therefore, no effect on the differential voltages.

Noise Induction on Balanced, Twisted, Isolated Lines:

The underground cables now at Atlanta, and presumably at all other modern ILS systems, are sheathed cables of twisted pairs. If the signaling system were converted to use balanced pairs with isolation, the inductive coupling would have the following properties.

First, consider the circuit of Figure 6. A magnetic field passing through loop A-K-E-F-G-H-L-C-A will induce a current through this loop which will appear as "noise" at points A and C. Another induced current can appear via the same mechanism acting on loop B-K-E-F-G-H-L-D-B. Unless

1. Points C and D see the same impedance to "ground" (at termination #2) at point L, and
2. Points A and B see the same impedance to "ground" (at termination #1) at point K,

these two currents will induce a voltage difference between C and D and also A and B. Thus, to attenuate this type of noise induction, balancing of the two wires (in a cable pair) is used. Also, drainage and isolation transformers are effective.

Unless the twist applied to the "twisted pair" (formed by wire #1 and wire #2) is perfect,* the loop A-B-D-C-A, when exposed to an external magnetic field, will have a current induced in it. This current will then induce differential voltages

*That is, the net cross-sectional area between the two wires as seen from any angle is zero.

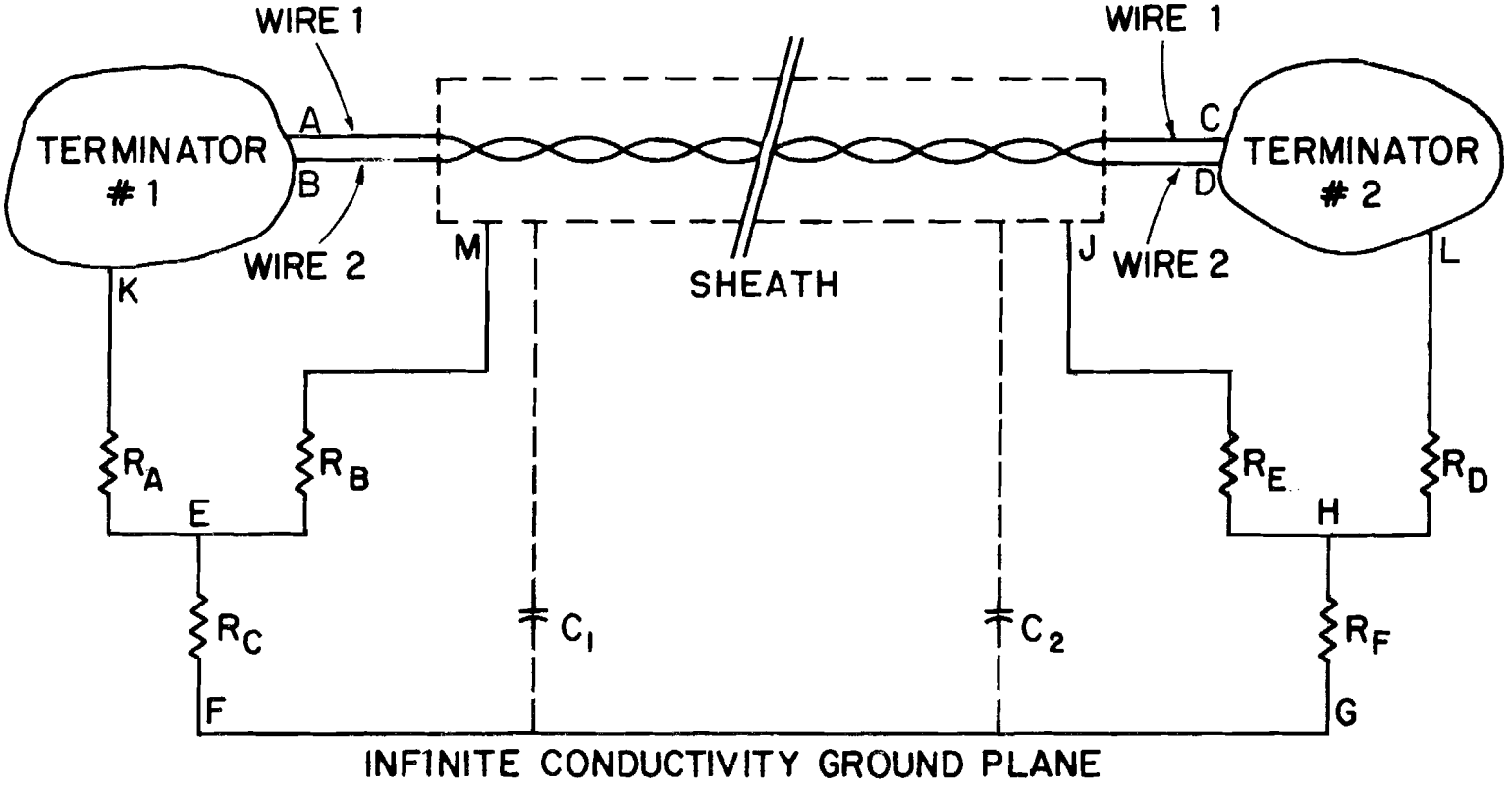

FIG. 6 A MODEL OF THE CONNECTIONS IN A CABLE SIGNALING SYSTEM

between points A and B and also between points C and D. A defense against this noise induction mechanism is the twisting of the two conductors. Another defense is to make the sheath of a high-permeability material, so that external magnetic fields cannot penetrate into the vicinity of the twisted pair. However, these materials are expensive. Thus, modest-permeability materials such as aluminum or copper are commonly used. (Copper is used at the Atlanta CAT-III ILS installation.)

Another defense against the noise mentioned above is as follows: The two closed loops are obviously of almost identical cross-sectional area to the third loop M-E-F-G-H-J-M. Hence, external magnetic fields will induce current flow in this loop also. This current (which is through the sheath) will, in turn, generate a magnetic field interior to the sheath. It can be shown that any "secondary" currents induced on the inner conductors (by this sheath field), will be in a direction opposite to those currents discussed above. Thus, by "grounding" the sheath at both ends* (points M and J), the sheath can act as a partial shield to external magnetic fields. However, grounding the sheath at both ends makes our system vulnerable to a third type of noise induction mechanism.

Suppose lightning strikes a metal structure located near either end of the sheath. This lightning-induced current will pass down the metal structure and into the earth. From here the current will diffuse in all directions within the earth. That portion of the lightning earth current traveling toward the sheath may well find it attractive to use the sheath ground rod as a low resistance path. If lightning were to strike near termination #1, for example, such a path would be M-E-F. Since this current can be large, it can induce substantial voltage drops across the common resistance (of the ground rod) R_c. Thus, all points within termination #1 that are referenced to ground** (K) will rise in potential by the amount of this voltage drop. This phenomenon is called "ground potential rise," (GPR). Unless points A and B and C and D are electrically isolated from their respective ground points (points K and L, respectively) by use of an isolation transformer, for example, the common voltage rise at points A and B will cause additional currents to flow from points A and B. These currents will flow into terminator #2 at points C and D. Unless the conductor pair (wire #1 and #2) and the terminals

*and at as many intermediate points as is practical.

**that is, tied either directly or indirectly (through circuit components) to ground point K.

C and D both present balanced loads, these two new currents will induce different voltages at points C and D. Thus, a non-zero differential noise voltage can appear across terminator #2 because of a GPR at terminator #1.

Defenses against this noise mechanism are balancing and/or the use of 1:1 isolation transformers at either ends of the line. One could also break the ground connections at points M and J. But this would cause the sheath to become useless in protecting against the magnetically-induced noise mentioned earlier. Also, lightning ground current could still cause a GPR by using the path K-E-F. In addition, there is always parasitic capacitive coupling between the sheath and the infinite earth. (See Figure 6.) These capacitors can complete this same loop, though not as effectively as a ground rod connection.

Another way to reduce the above effects of GPR is to reduce the value of the resistance R_c. Physically, this can be done by using a separate ground rod for the sheath. The result is that R_c becomes the earth "shared" by the two separate ground currents. Since this earth path is physically very bulky (of large cross-sectional area), the resistance R_c is therefore low.

Should the lightning ground current mentioned previously choose to flow down the length of the sheath, it will obviously induce strong magnetic fields in the vicinity of the twisted pair. This will result in a common-mode current flow in the pair; and, thus, a common-mode noise voltage will appear at point C & D and A & B. Three defenses against this mechanism are balancing, the use of 1:1 isolation transformers at either end of the twisted pair, and drainage transformers.

Electric fields (caused, for example, by a nearby lightning strike) can induce voltages on the twisted pair conductors. However, against such fields the sheath should be fairly effective. Electric fields will draw a concentration of electrons to either face of the sheath according to the polarity of the E field. This electron concentration will induce an additional E field within the sheath of such a polarity as to oppose the externally-generated E field. Because of the finite conductivity of the sheath shield, however, this cancellation will not be complete; and, thus, nonzero voltages will be induced on wires #1 and #2. However, if the twisted pair wires are part of a balanced signaling system, these two voltages will be identical. Thus, the resulting noise potential at points A & B (or C & D) will be purely common-mode, with no differential signal that can be sensed at terminator #1 or #2. However, if these common-mode voltages are sufficiently large, they can still do damage to components within the two terminators. To prevent this, one can use 1:1 isolation transformers and/or drainage transformers. One can also use breakdown devices such as gas tubes, carbon blocks, or zener diodes.

III. SIGNALING ON COMMUNICATION LINES

A. DC Signaling on Balanced Pairs

All telephone connections from remote instruments to central offices are on balanced pairs [Ref. 10]. Grounds are broken at each connection to the cable; i.e., the ground is not connected from remote installation to the cable. A new ground is established in each building for the telephones and other remote communications equipment therein. The first automatic telephone exchanges used DC signaling on balanced pairs. The offhook signal (DC current flow) and the dial pulses are DC signals. For normal telephone use, a signaling error caused by a lightning induced transient means a wrong number or a premature disconnect. This is considered annoying but not serious. More modern systems with more vital services, where such errors are not tolerable, use AC signaling.

B. Tone Signaling Techniques

Tone signaling has been used successfully in telephony for many years. The 1960 article by Breen and Dahlbom [Ref. 7] gives a thorough and readable description of the signaling methods used at that time. Figure 1 from that article (see Figure 7) shows the various tones used then for transmitting status, control, address, and certain information signals. Since then, the touch tone dial and many other tone signals have been added. Furthermore, the international standards of the Comite Consultatif International Telegraphique et Telephonique (CCITT) include a whole host of tone signals. In summary, tone signaling has proven extremely reliable and has been universally adopted for sending status, control, and other information over telephone lines.

One basic signaling function required in the ILS system is the continuous transmission of status information. Each component tells the monitor panel when it is working properly. Some components tell the control panel of their respective status and the monitors tell the respective transmitters the status of the received signals. In a telephone plant, each trunk reports idle status via a 2600 Hz signal frequency (SF) tone. This SF tone goes off when the trunk has been siezed by a switch for use in a call. This signaling is extremely reliable and inexpensive.

A second type of signal required in the ILS system is the control signal. These controls include RESET, CHANGE TO STANDBY, SHUT DOWN, etc. In the telephone plant there are two signals called KP and ST that are used to inform the next station that address information is about to start and then that address information is finished. The KP pulse (two simultaneous tones at 1100 and 1700 Hz) connects the receiver to the line. The ST pulse (1500 and 1700Hz) disconnects all signal transmitting and receiving apparatus and prepares the line for its

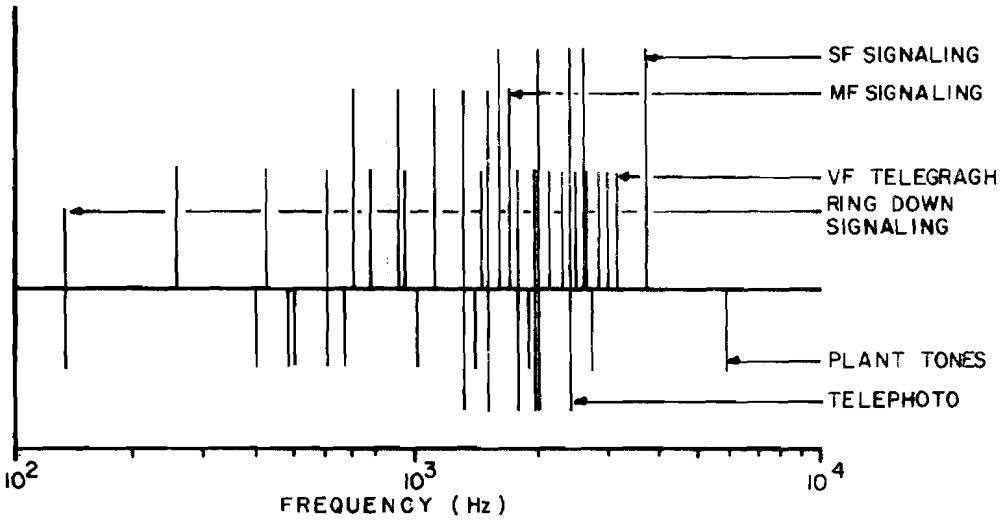

FIG. 7 VARIOUS SIGNALING AND PLANT TONES

normal voice or data traffic. A similar control signaling operation in the ILS should be as reliable and inexpensive as the one in the telephone plant.

The telephone plant is not the only place wherein tone signals have been used effectively. The pocket pagers, widely used by medical people, emergency service persons, salesmen and others who need to be reached when they are not at a fixed location, also use tone signaling. Power companies use tone signaling on their private microwave lines and over regular telephone lines to relay status and control signals. Gas and other pipeline companies also use tone signal relaying.

The above discussion shows that tone signaling is applicable to the status and control relaying problems for ILS systems. The next question: "Is a conversion to tone signaling cost effective when compared to the problems of fixing up the present DC signaling system to eliminate vulnerability to lightning transients?"

With tone signaling there is no problem using balanced pairs in the existing cables. Although this takes twice as many wires if only one pair is used for each signal, there is no problem putting several signals on a single wire. The prototype system proposed in this report can easily handle the eight touch tone frequencies on a single pair of wires. Thus, tone signaling will actually yield a great reduction in the number of wire pairs needed. The advantage of the touch tone frequencies is that inexpensive off-the-shelf hardware is already available.

Of course, one could also go to radio frequency signaling. Pocket pagers use rf frequencies near 30 MHz, 150 MHz, and 450 MHz. Although the UHF band may be subject to errors because of reflection off nearby aircraft, the other bands would most probably be very reliable. One rf channel could handle at least 25 signals with simple tones. Without new designs, it would probably require more channels than the FCC would likely assign to one airport to handle all the control and status signal requirements of a MARK III ILS. Nevertheless, if adding cable is difficult, some signaling over rf channels could prove cost effective.

C. Modems with an AC Carrier

There are many modulator-demodulator (modem) sets available for sending data over telephone lines. All of these modulate an AC carrier within the voice frequency band. There are many different modulation schemes in use today. Some modems are also multiplexers. They take as input many channels at low data rates and multiplex these into a fairly complicated modulating wave. There is no problem putting all the control and status signals for an ILS on one or two pairs with a properly designed modem-multiplexer. Although design costs will be prohibitive if a new design is required, there may well be an existing modem that

can do the job. In phase II of this project we intend to survey the modem market to see if something is available at a reasonable price.

IV. PROPOSAL FOR PHASE II

A. General

Our basic proposal for Phase II of this program is to build a prototype signaling system that satisfies all of the design criteria discussed in sections I and II above. To keep costs down, we will use tone signaling with off-the-shelf hardware as the first choice. We will explore other possibilities to give cost comparison. The experimental setup described below will lead to a prototype system that can be put into a package specification for competitive bids on an entire signaling system. The new signaling system uses existing cables and interfaces with existing indicators and actuators for status reporting and control functions. Laboratory tests on both the present system with diode protection and the new system will be conducted to see the relative susceptibilities of the two systems.

B. The Proposed Signaling System

In Figure 8 we have detailed our current concept of how the CAT-III logic level signaling could best be done. Only eight signals are allowed for here; but, of course, the technique is indefinitely extendable to as many signals as desired. Each additional set of eight logic signals will require only one twisted pair.

The noise protection mechanisms here are:

1. Signal line balancing
2. Line isolation --- at both ends of the signal path
3. Drainage reactors --- at each end of the line
4. Tone signaling --- to allow easy coupling onto an isolated line through transformers -- also to permit frequency multiplexing of many logic signals on a single twisted pair
5. One-second delays --- to provide time for the tone decoder to recapture a tone temporarily garbled because of noise
6. Separate DC power supplies --- to avoid using the existing 28-volt lines which are corrupted with noise
7. Breakdown devices -- one at each end of the line

Notice that other than the two devices shown in Figure 8, no breakdown protective devices have been prescribed. It is our opinion at this time that by eliminating the causes of most of the signal line noise, we simultaneously obviate special protective devices.

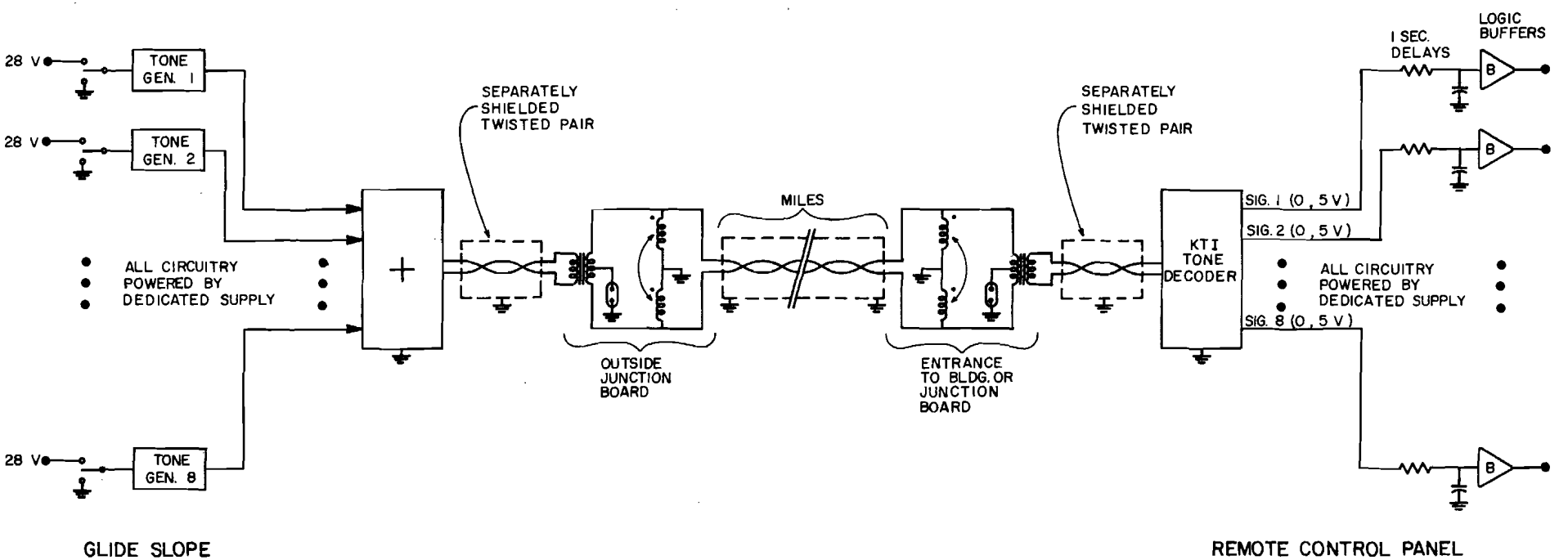

Fig. 8 THE CURRENTLY-PROPOSED TONE SIGNALING SYSTEM

The specific system components that we are prepared to build are as described in Appendix D below. The plan is to test the system with the various alternatives in the laboratory on a 100-foot cable as described below. The laboratory-proven system would then be installed at NAFEC.

C. Advantages of the Proposed Signaling System

We see no reason at this time to propose expensive protective devices on the lines after conversion to signaling over balanced pairs. The telephone company uses only carbon block protection and has virtually no trouble. Touch-tone phones with their associated electronic circuits are on the line during thunderstorms. Only direct hits on overhead lines right at a building cause phone damage. Even telephone central offices with elaborate electronics connected right to the balanced pair lines do not require elaborate protection.

We believe that with ac signaling and isolation transformers no further protection is required. However, since gas tube protectors are very cheap, it costs only a few cents extra to put a gas device on each line. There is no need for zener diodes tailored to each circuit's voltage limits. We doubt that the gas devices will fire except when direct hits occur at the circuit location. Then upset is unavoidable and the gas device will prevent damage.

In order that nuisance spikes or pulses will not affect the central function, we are proposing that nominal delay be included in the tone decoder which will be in place of the locally installed delay scheme used in Atlanta. (Item 5 under IV B on page 23.)

The proposed system is exactly the system that has been used for many years for signaling over phone lines. Reference 10, from which we took some of our material, describes a study on switching done by the telephone company in cooperation with several power companies. When the phone company has a problem they use one of their Western Electric 402 data sets to put eight tone signals on one balanced pair. That data set is just a touchtone generator and receiver. They charge $2600 for a pair of data sets complete with power supplies. Most operating phone companies have found that they can buy reliable touchtone equipment from independent suppliers for about one fourth of the Western Electric price.

The ILS system environment is much less severe than the environment for control lines for a power system. The power requirements for the devices we propose are miniscule. The batteries would not even see the added load. When we set up the system in Phase II, we will specify maximum power requirements.

The system we propose applies to the monitor and control lines. As pointed out earlier, we think the power line interface needs no additional protection.

As for the localizer, glide slope or marker beacon antenna induced signal interference, there is no evidence of failure or apparent reason for upset from transients over rf lines associated with the antennas or any other short lines connected to the system.

The intercom lines should be on balanced pairs. They could also be AC coupled through isolation transformers. Voice below 100 Hz can be cut out without disturbing intelligibility.

The FFM-Localizer DDM lines would be much quieter if a balanced pair were used for each signal. (There are three.) This change would make these lines usable. The ones at Atlanta have been disconnected because they are completely unreliable. We believe that noise problems would be essentially eliminated if a voltage to frequency converter ($59) were used to convert the DDM indication to AC. Then an isolation transformer could be used. If a digital meter were used at the localizer end, no conversion back to voltage is required. Another $59 unit could be used to convert the frequency back to a voltage for the present analog meter system. The present system uses three lines plus a single common. With multiplexing of the monitor signals, there will be a third pair available so that three pairs can be used for the three DDM signals.

The specification of the system after the Phase II testing will show how other protection should be included if required. At present we see no reason for more protection or hardening.

D. Laboratory Testing

Both the present and proposed signaling systems will be setup and operated in our laboratories. In each case, the signals will be exposed to a severe noise environment such as one would expect in the presence of lightning. This will be accomplished by forcing large spikes of current down the length of the sheath of a 100-foot length of standard FAA 50-pair signal cable. These current pulses will be periodically applied (about three pulses per minute) 24 hours a day for a duration of several weeks. Simultaneously, the automatic testing device (see Appendix D) will be sending randomly-varying control signals through one of the sheathed twisted pairs. This device will monitor the signal received at the far end of the cable and constantly compare it with the original signal. Even momentary differences will be noted and will cause an automatic error counter to be incremented.

During the testing of the present signaling scheme (which will be done to allow comparison with our new approach), only one time-varying logic signal will be sent through the twisted pair. This since the present CAT-III system allots only one such signal per wire. However, the identical test of our proposed system will be done with eight time-varying tone control signals multiplexed on a single twisted pair.

Since this automatic test procedure need not be attended by a human operator, it will be possible to run these tests continuously for several weeks at a time.

In the present experimental setup, which was originally designed for other purposes, the pulses are triggered manually. Because the capacity of its power supply is rather small, it takes roughly one minute to charge the capacitors to 1 kV. To overcome these points, a new pulse generator is under construction. The main features are that the high-voltage power supply is capable of charging the capacitors quickly, (on the order of 20 seconds or so), and the IGNITRON is replaced by a high-voltage fast SCR, which can be triggered automatically. It is planned to use a function generator to trigger the SCR repetitively and let it run for several days. A schematic diagram of the new pulse generator is shown in Figure A-1.

E. Computer Simulation

The computer simulation activity, now getting well under way, will be continued. Our aim in this second contract period will be the analysis of the larger circuits mentioned in Appendix B. Again the purpose is to determine just how deep into the ILS circuitry one may expect noise pulses to penetrate.

F. Preparatory Trip to NAFEC

In preparation for the installation of our signaling scheme, we will visit NAFEC in either April or May. At this time, we will:

1. Furnish the preliminary specifications for the NAFEC installation in terms of expected performance criteria (to ARD-321).
2. Specify protective devices, as required, for the entire system.
3. Determine the extent of NAFEC participation for installation of the proposed system.
4. Establish a method for evaluation of the present NAFEC installation.
5. Consider use of digital voltmeter for FFM at the localizer end.
6. Review the cable interfaces and terminations.
7. Determine mounting requirements of equipment, such as 19" panels on 22" racks at tower, and wall mounts, at local sites, except FFM.

8. Apply signals of various frequencies and shapes to a currently-unused twisted pair in order to test for proper balance. A standard scheme for taking this measurement is shown in Figure A-2. From measurements of V_2 (longitudinal) and V_M ("metallic" or differential), one may calculate the longitudinal-to-metallic attenuation ratio

$$B = 20 \text{ LOG}_{10} \left(\left| \frac{V_L}{V_M} \right| \right) \quad \text{(dB)}$$

which is a common measure of balance.

G. Installation

Our installation trip should occur during the summer of 1975. As stated earlier, it is our intention to use seven signal lines at NAFEC running between the remote control panel and the glide slope. Since seven twisted pairs are now used for these control signals, and since only one pair will be required by our frequency multiplex scheme, this will free six pairs to serve as standby (should another pair become inoperable) or for other signaling purposes.

Specifically, the following items will be accomplished:

1. Perform a prototype installation of proposed signaling schemes in selected representative ILS interstation circuits at NAFEC to demonstrate the feasibility of the technique. These circuits will include as a minimum a GS-Tower interface, a marker to tower interface, plus two LOC FFM remote DDM readout meter lines.
2. Provide detailed specification requirements for retrofit for three types of systems: CAT III with maintenance-monitor, CAT III without maintenance-monitor, CAT II without maintenance-monitor.
3. Provide modified system drawings and specs.
4. Establish maintenance requirements, including need for test equipment.
5. Consider the impact of the fail-safe characteristics of modification over all systems operation.
6. Compare tone signaling vs. protective devices in terms of effectiveness, maintenance, and cost (including cost of leased lines).

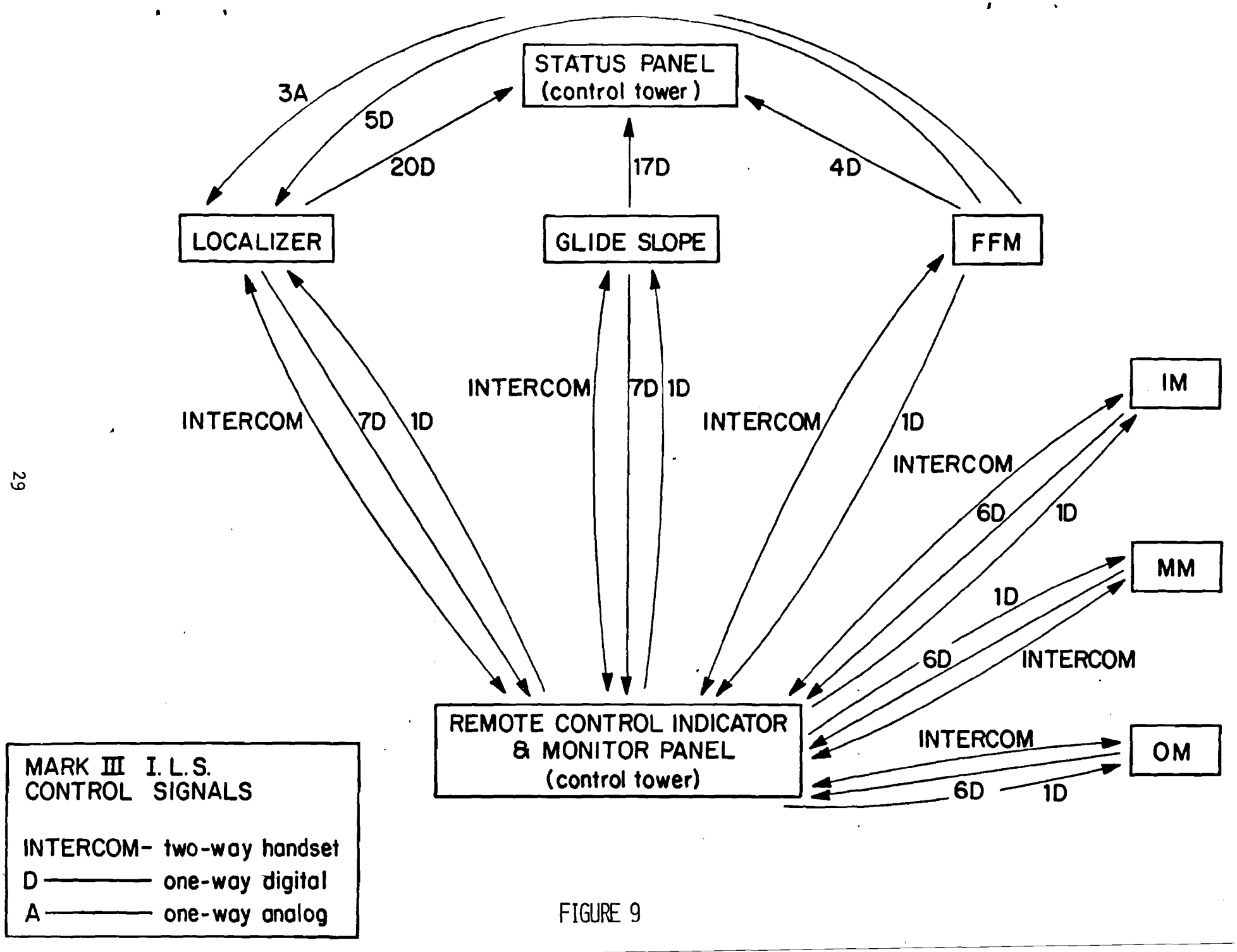
STATUS PANEL
(control tower)
3A
5D
20D
17D
4D
LOCALIZER
GLIDE SLOPE
FFM
INTERCOM
7D
1D
INTERCOM
7D
1D
INTERCOM
1D
IM
INTERCOM
6D
1D
MM
1D
6D
INTERCOM
REMOTE CONTROL INDICATOR
& MONITOR PANEL
(control tower)
INTERCOM
OM
6D
1D
MARK III I. L. S.
CONTROL SIGNALS
INTERCOM- two-way handset
D ——— one-way digital
A ——— one-way analog

FIGURE 9

Appendix A

Noise Coupling

1. Interference and Noise Coupled Through the Sheath

In order to suppress noise and disturbances on the communication and control lines, it is important to identify the sources and characteristics of these disturbances and their coupling mechanisms or paths. Only when these factors are understood can one take proper remedial measures. While the source of the disturbances for the problem under study is obvious, lightning strokes, only the statistical characteristics of these disturbances are known. The most thorough work characterizing lightning surges on buried cables is the experimental investigation by Bennison, Ghazi, and Ferland [Ref. 1]. Their work showed that 99.8% of all lightning surges appearing on buried cables can be represented by a waveform* of (10 x 1000μsec) with a peak voltage of 1000 volts, and for open-wire lines, by a waveform of (4 x 200μsec) with peak voltage of 2000 volts. As all the cables used in FAA facilities are buried cables, we shall use (10 x 1000μsec) as our test waveform. The spectrum of (10 x 1000μsec) is presented in Figure A-3. Also depicted there is the spectrum for (4 x 200μsec) pulses. Note that the abscissa is in decibels (dB). Clearly the energy of (10 x 1000μsec) surges is contained in the frequencies of 10 KHz or less. For a (4 x 200μsec) waveform, the spectrum is extended to 100 KHz.

Since the spectrum of surges is confined to low frequencies, it is possible and convenient to study the effect of disturbances by dividing them into electric field effects and magnetic field effects. This division would be inaccurate if the spectra of the surges were above a few megahertz, in which case it would be necessary to consider the electromagnetic effects as a whole. If we picture a lightning channel as a current-carrying conductor, the electric field effects and magnetic field effects may be represented by a mutual capacitance and a mutual inductance between the current carrying conductor and the communication lines respectively. Needless to say, the presence of the earth should always be taken into account. A solid, continuous and properly grounded metallic shield will completely screen the electric field from the electronic components within the shield. As there is no "magnetic conductor," it is relatively difficult to shield

*The waveform of voltage surges is designated by two numbers. Roughly speaking, the first number is the duration of the wavefront, in microseconds, and the second number is the time in microseconds from the beginning of the surge to the instant at which one-half of the peak value is reached on the wave tail. For a more precise definition, see Ref. [2].

against magnetic field effects. While any grounded metallic shield may reduce the magnetic field to some extent, the shields now in use are not sufficiently effective to prevent signal disturbances. In the following discussion, our attention is thus focused on the disturbance induced by magnetic fields. One additonal factor we will consider is the voltage drop caused by lightning current flowing in an earth with finite conductivity. This is known as "ground potential rise" [Ref. 3].

Consider a system consisting of a buried, sheathed cable with a sheath impedance Z_s and a lightning channel carrying a current I_0. If the lightning discharge is between clouds, then the predominant noise mechanism is the magnetic coupling between the buried cable and the lightning channels. Let the mutual inductance between the cable and the lightning channel be M. Then the current I_s induced on the sheath by the lightning current is

$$I_s = j\omega M \, I_0/Z_s \tag{1}$$

If the lightning channel drives to ground, the current induced on the sheath is mainly beeause of the ground potential rise. In any event, let I_s be the current induced on the sheath.

Schelkunoff [Ref. 4] defined a term "transfer impedance" Z_{tr} to relate the electric field E_1 induced <u>interior</u> to the sheath with the current I_s flowing on the sheath. Thus,

$$E_1 = I_s \, Z_{tr} \tag{2}$$

If the cable is electrically short, the voltage between the sheath and the wire (or wires) within it is

$$V = E_1 \ell = I_s \, Z_{tr} \, \ell \tag{3}$$

where ℓ is the length of the cable. By "electrically short" it is meant that the line is much shorter than the noise wavelength. As discussed previously, the highest frequency of interest is about 10 KHz, so the corresponding free-space wavelength is 9.84×10^4 feet (3×10^4 meters). On the other hand, the cables used in FAA facilities are typically of the order of 10^4 feet. Therefore, the use of equation (3) is justified.

The transfer impedance Z_{tr} depends on the electrical properties of the sheath as well as the detail construction of the cable. For a wire surrounded by a coaxial cylindrical sheath the transfer impedance has been derived by Schelkunoff [Ref. 4],

$$Z_{tr} \simeq \frac{1}{2\pi}\sqrt{\frac{j\omega\mu_c}{ab\sigma_c}} \Big/ \sinh[(b-z)\sqrt{j\omega\mu_c\sigma_c}] \qquad (4)$$

where μ_c, σ_c, a and b are the permeability, conductivity, inner and outer radii of the sheath. For low frequencies, equation (4) can be further simplified to

$$Z_{tr} \simeq 1/[2\pi\sigma_c(b-a)\sqrt{ab}\,] \qquad (5)$$

In other words, the transfer impedance is roughly equal to R_{dc}, the DC resistance per unit length of the sheath. In view of equations (3) and (5), a reasonably accurate interpretation is possible. For a well-shielded cable, the voltage appearing on the inside of the cable between the wire and the sheath, because of a current flowing on the sheath, is mainly the result of the resistive coupling through the resistance of the sheath; and the contribution caused by the mutual inductance between the sheath and the wire is nearly cancelled out by the self inductance of the sheath. Although equations (4) and (5) are derived for a truly coaxial structure with a single inner conductor, it is approximately correct for cables with multiple-wire conductors.

If the cable has a multitude of wires of various sizes and mutually insulated from each other, there is one additional complication. Not only will there be a voltage known as the "longitudinal voltage" between each wire and the sheath, but it is also likely to have a voltage between any two wires, known as the "metallic voltage." The metallic voltage is mainly because of the difference of the mutual inductances and capacitances between the wires and the sheath. As the wires or pairs of wires are twisted in a helical fashion inside the sheath, the difference in mutual inductance is difficult to predict. From the preceding discussion, it should be obvious that the metallic voltage is much smaller than the longitudinal voltage. On the other hand, the ratio of these two voltages is not known. It is most reliable to determine the ratio experimentally.

2. Experimental Investigation

To find the ratio of metallic voltage to the longitudinal voltage induced on the cable as a result of lightning strokes, two sets of data are needed: the resistance of the sheath and the mutual inductance between the sheath and each wire. As commented on previously, the mutual inductance is difficult to predict. In additon, for most cables, the sheaths are made by winding metallic tapes or by overlapping of corrugated metallic sheets. For these cables, one has to be very cautious in applying equations (4) and (5) to compute the sheath resistance, as the electric contact between sheets, the resistance of overlapping tapes and leakage through the gaps are not known precisely. Thus, the most reliable method to determine the sheath resistance is also by experimental measurements. In

particular, it is noted that the longitudinal and metallic voltages are the result of current flowing through the sheath, so the method used to induce the sheath current is immaterial. For laboratory simulation, it is desirable to control the experimental parameters precisely. Therefore, we chose to connect the sheath directly to the output of a high-voltage source and measure the induced voltage between the sheath and the inner wires or between wires.

A photograph of our experimental setup is shown in Figure A4 and its schematic diagram is given in Figure A5. The setup was used by Professors D. B. Miller and H. W. Thompson in their investigation of short pulse switches [Ref. 5]. The circuit is essentially composed of two parts: the triggering circuit and the pulse forming circuit. The pulse forming circuit is essentially a group of high-voltage, low-inductance capacitors. The capcitors were charged to a predetermined voltage and then discharged through the cable under test. The switching action was provided by an IGNITRON (GL 7171), which in turn was triggered by the triggering circuit. The triggering circuit itself was driven by a delayed pulse generator (HP 8013A) and a manually controlled switch.

The circuit parameters are chosen to give pulses of the desired waveform (10 x 1000μsec) and the amplitude of the pulse was determined by the output of the Power Supply No. 3. Figure A6 shows the observed waveform. In Figure A6b the time scale (horizontal scale) is greatly expanded to exhibit the leading edge of the pulse.

Two sections of shielded telephone cables were obtained from the FAA: one has 25 pairs and the other has 50 pairs of inner conductors. However, it was found that the sheath of the cable with 25-pair conductors has a bad contact or is discontinuous about midway down the cable. Hence, no further testing was carried out on that cable. Rather, tests were performed on the 200 foot cable with 50-pair wires. High current pulses were discharged through the sheath, and longitudinal and metallic voltages were measured. For each pair of wires chosen, the longitudinal voltage (i.e., the voltage between the sheath and the individual wire) and the metallic voltage (i.e., the voltage between the pair of wires) at one end were observed when the other end of the wires were open-circuited (see Figure A7), or short-circuited (see Figure A8), terminated by its characteristic impedance [Ref. 6] ($R_0 \simeq 103$ ohms) (See Figure A9), or a typical load of 600-ohm resistance (see Figure A10). Some of the voltage pulses observed are presented in Figures A7-A10. Wires were chosen at random, and no appreciable variation in longitudinal voltages were observed. However, the metallic voltage is a function of the position of the wire-pair, the spacing of the pairs, and termination, as expected. Two extreme cases were examined in detail. In the

first case, one wire is located near the axis of the cable and the other is close to the sheath. In other words, the wire-pairs are widely spaced. As expected, the metallic voltage is relatively large; and the ratio of longitudinal voltage to metallic voltage is comparably small. These data are tabulated in Table 1. In the second case, two wires in close proximity to each other were tested. As expected, the metallic voltage is reduced, resulting in an increase in the ratio of longitudinal to metallic voltage, as given in Table 2. In conclusion, it is established that the metallic voltage is at least 25 db smaller than the corresponding longitudinal voltage; and for closely spaced pairs, the reduction is 30 db or more.

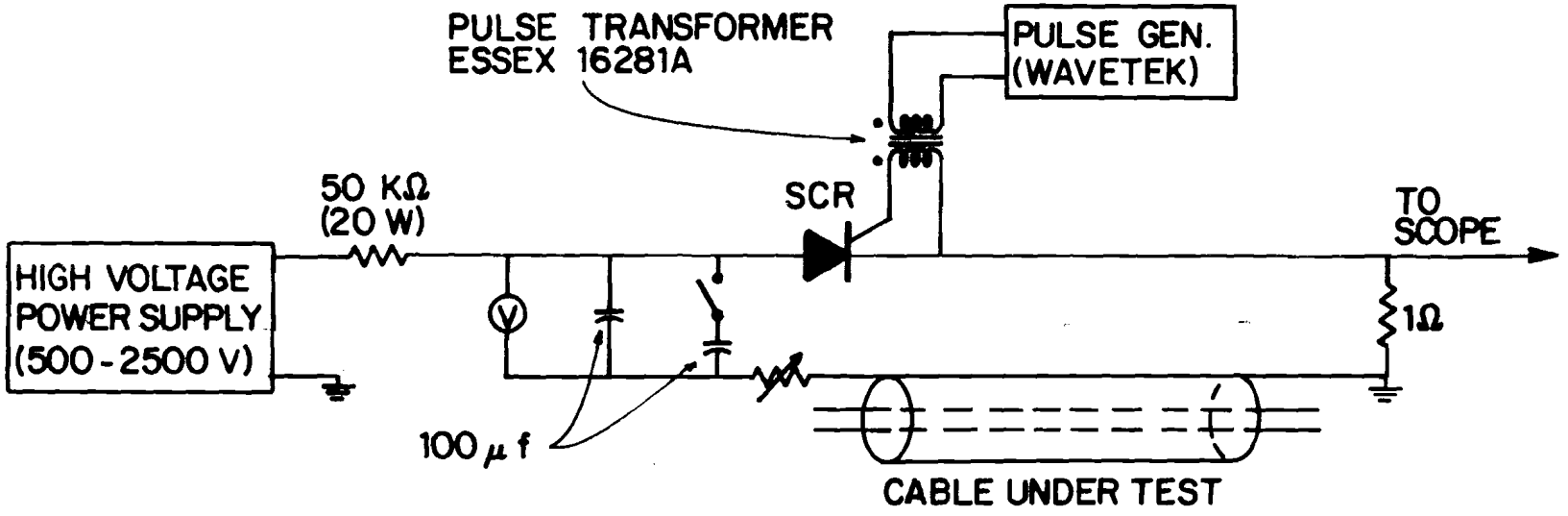

FIG. A-1 NEW HIGH-VOLTAGE PULSE GENERATOR UNDER CONSTRUCTION

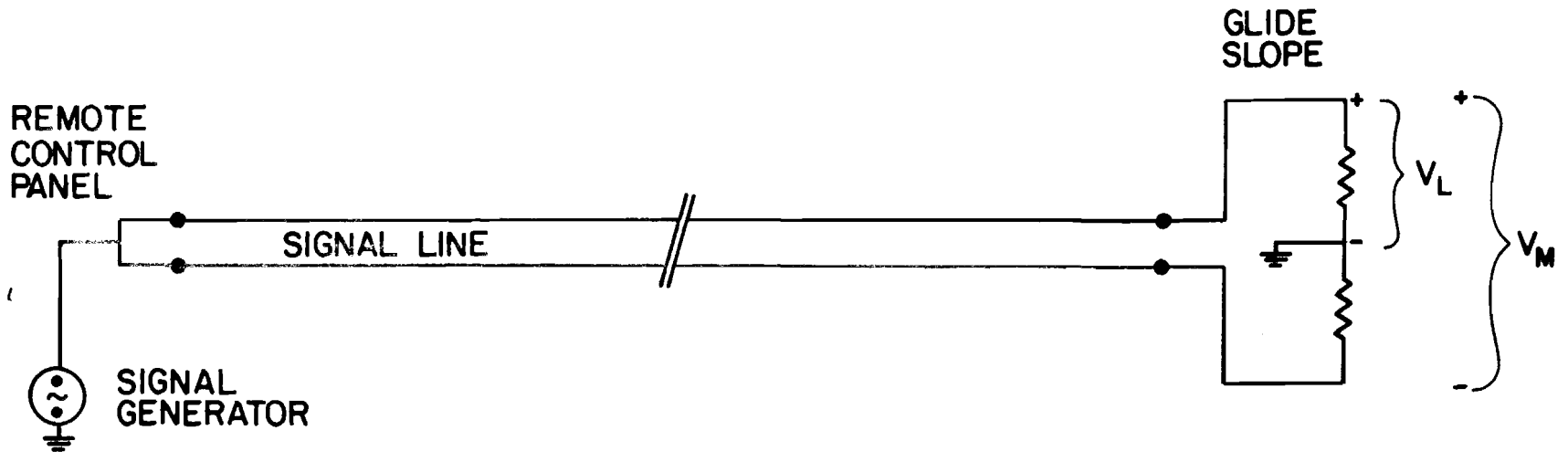

FIG. A-2 TEST SETUP FOR MEASURING THE BALANCE OF A SIGNAL LINE

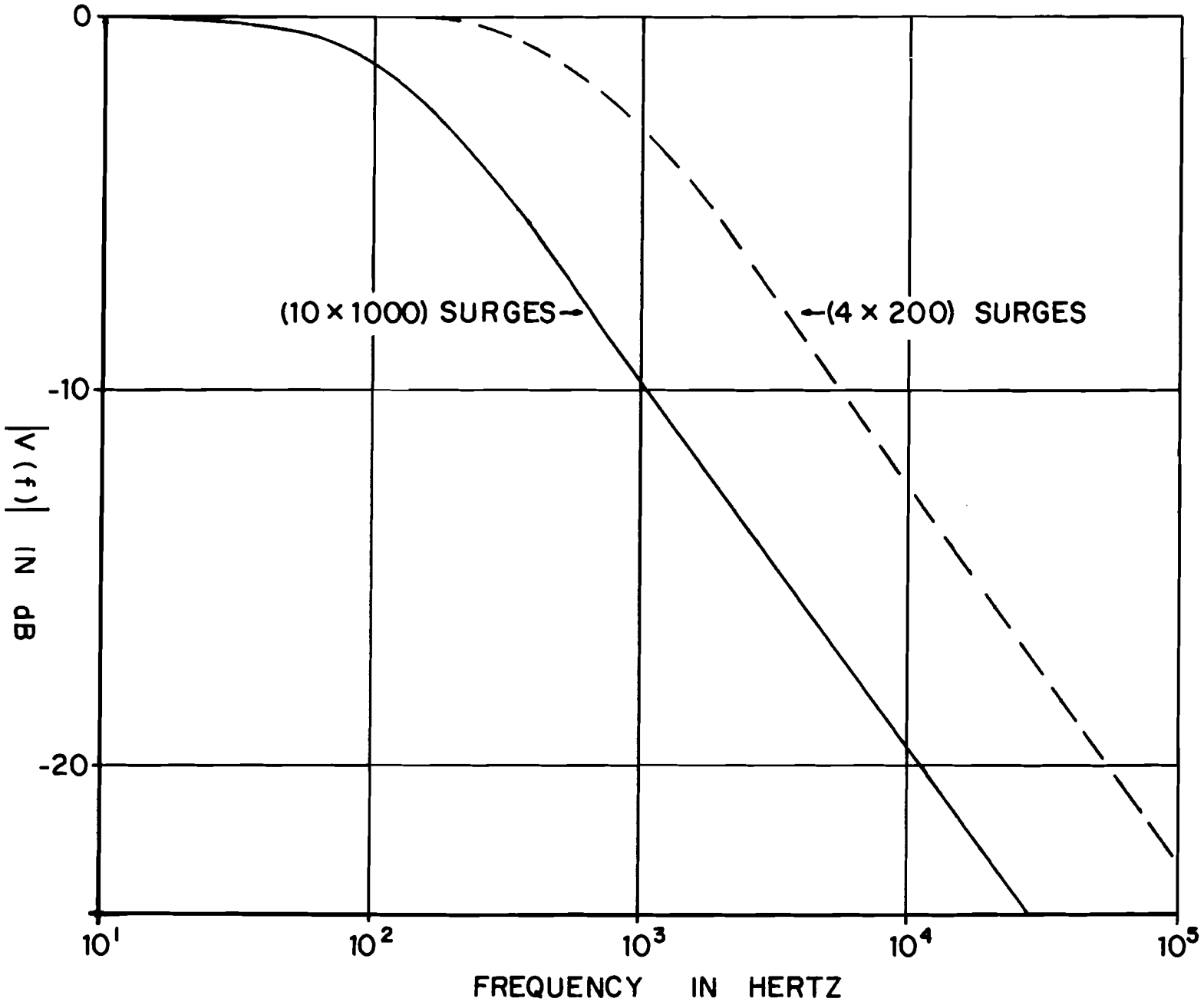

FIG. A-3 SPECTRA OF TWO COMMON LIGHTNING PULSE MODELS

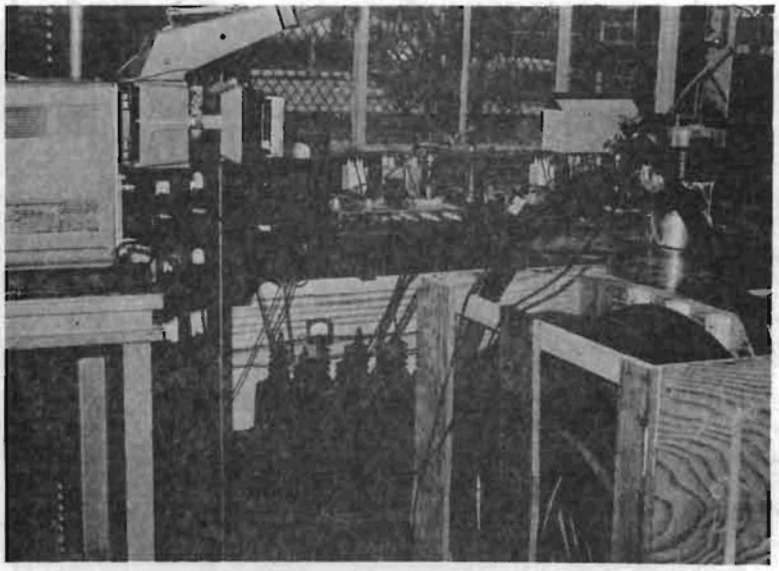

FIG. A-4 EXPERIMENTAL SETUP

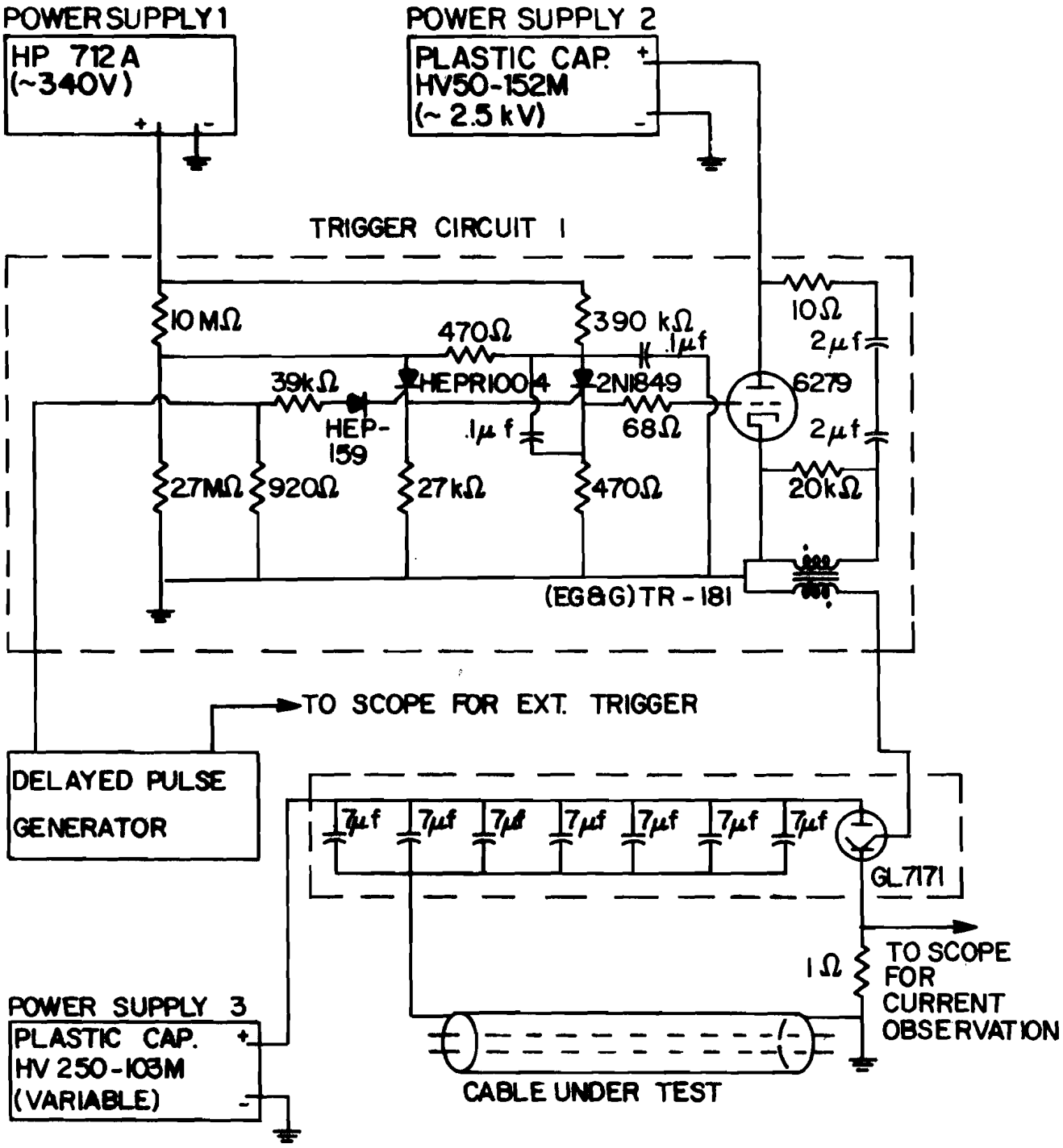

FIG. A-5 SCHEMATIC DIAGRAM OF THE EXPERIMENTAL SETUP

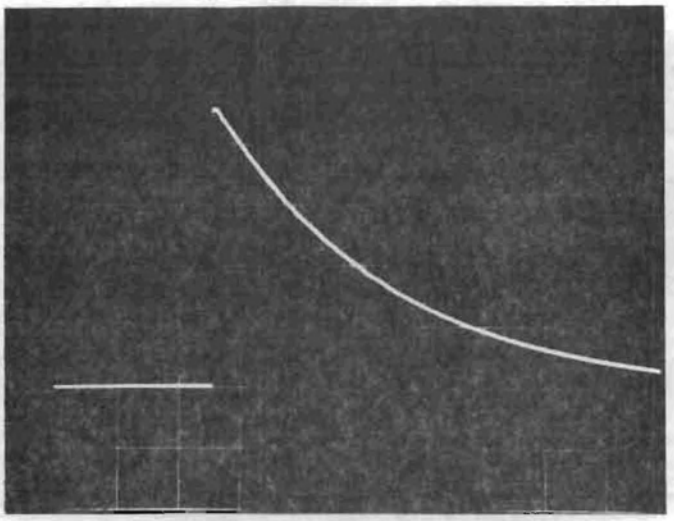

VERTICAL SCALE:
10 A/div

HORIZONTAL SCALE:
1 msec/div

a. LONGITUDINAL VOLTAGE

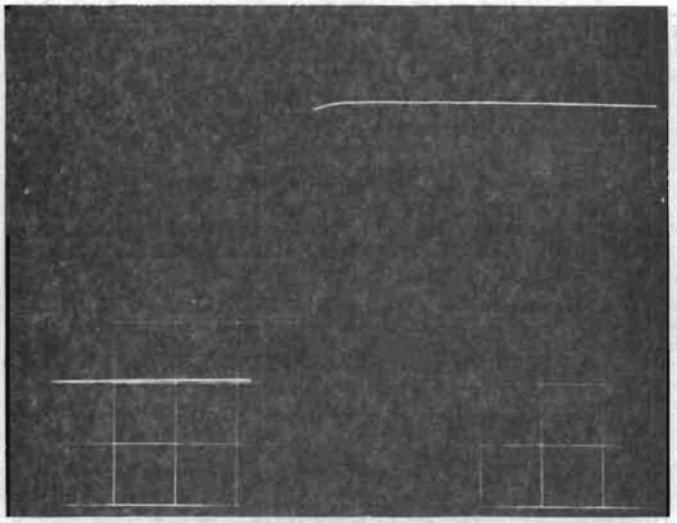

VERTICAL SCALE:
10 A/div

HORIZONTAL SCALE:
20 μsec/div

b. METALLIC VOLTAGE

FIG. A-6 THE CURRENT PULSE

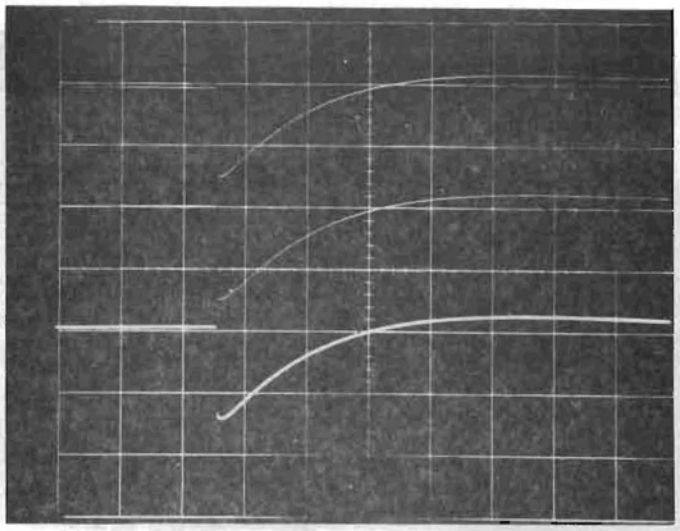

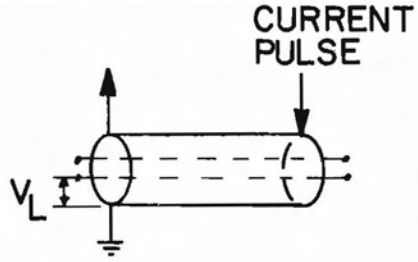

VERTICAL SCALE:
.5 V / div

HORIZONTAL SCALE:
1 msec/div

a. LONGITUDINAL VOLTAGE

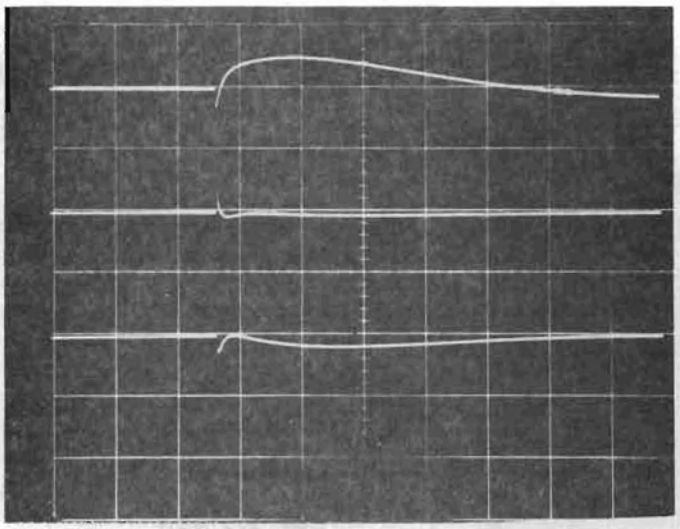

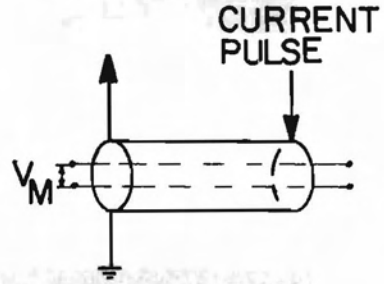

*

**

*** VERTICAL SCALE:
.05 V / div

HORIZONTAL SCALE:
1 msec / div

b. METALLIC VOLTAGE

FIG. A-7 MEASURED VOLTAGE PULSES WITH THE WIRE PAIR OPEN-CIRCUITED

*CORRESPONDING TO DATA PRESENTED IN TABLE 1

**CORRESPONDING TO DATA PRESENTED IN TABLE 2

***MORE TYPICAL WAVEFORM

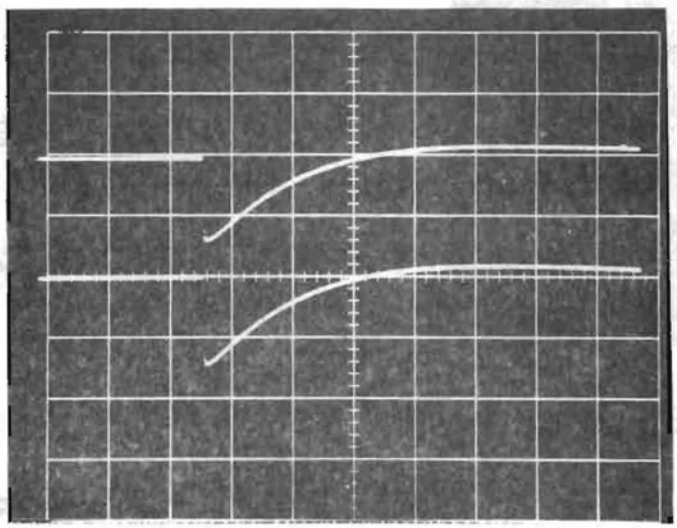

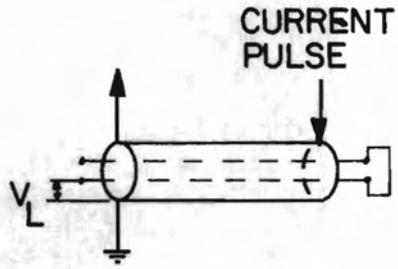

VERTICAL SCALE:
.5 V/div

HORIZONTAL SCALE:
1 msec (div)

a. LONGITUDINAL VOLTAGE

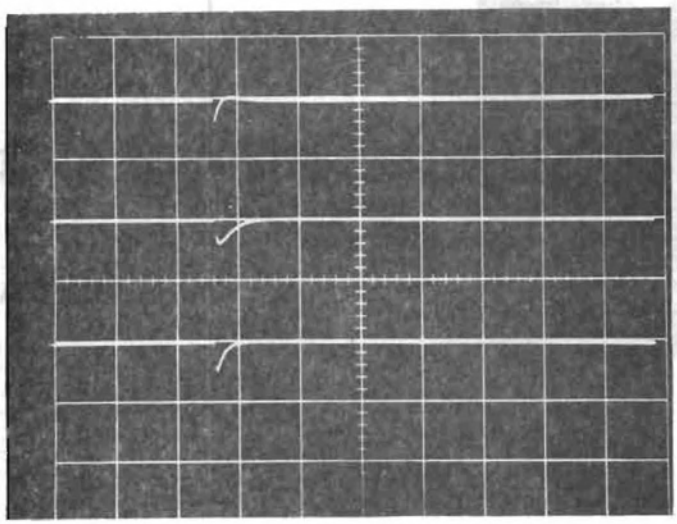

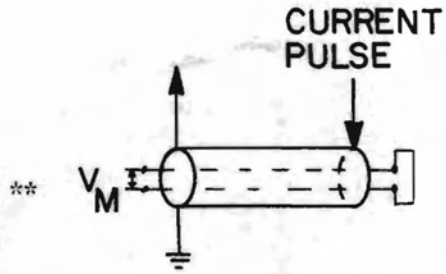

** ***

* VERTICAL SCALE:
.05 V/div

HORIZONTAL SCALE:
1 msec / div

b. METALLIC VOLTAGE

FIG. A-8 MEASURED VOLTAGE PULSES WITH THE WIRE-PAIR SHORT-CIRCUITED

*CORRESPONDING TO DATA PRESENTED IN TABLE 1

**CORRESPONDING TO DATA PRESENTED IN TABLE 2

***A MORE TYPICAL WAVEFORM

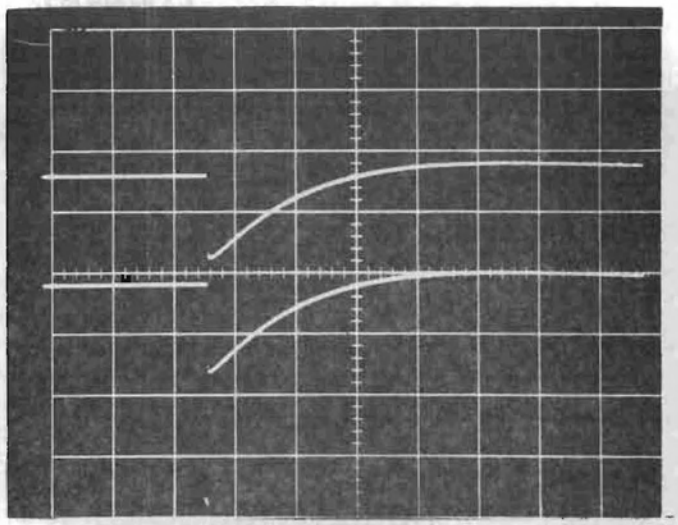

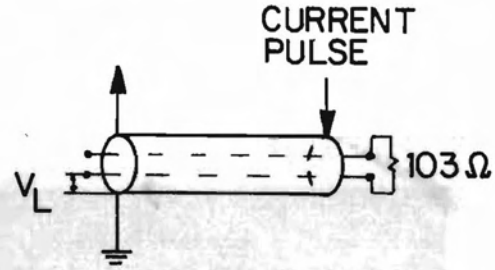

VERTICAL SCALE:
.5 V/ div

HORIZONTAL SCALE:
1 msec / div

a. LONGITUDINAL VOLTAGE

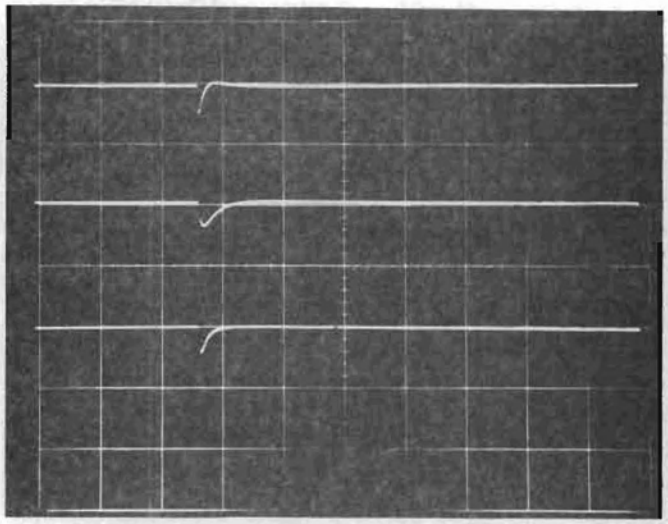

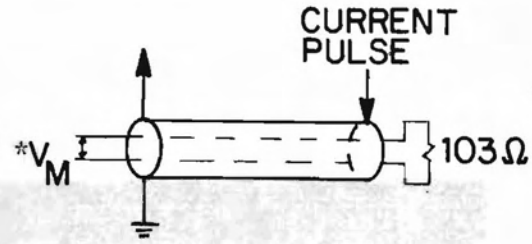

**

*** VERTICAL SCALE:
.05 V / div

HORIZONTAL SCALE:
1msec / div

b. METALLIC VOLTAGE

FIG. A-9 MEASURED VOLTAGE PULSES WITH THE WIRE-PAIR FERMINATED BY 103-OHM RESISTOR

*CORRESPONDING TO DATA PRESENTED IN TABLE 1

**CORRESPONDING TO DATA PRESENTED IN TABLE 2

***A MORE TYPICAL WAVEFORM

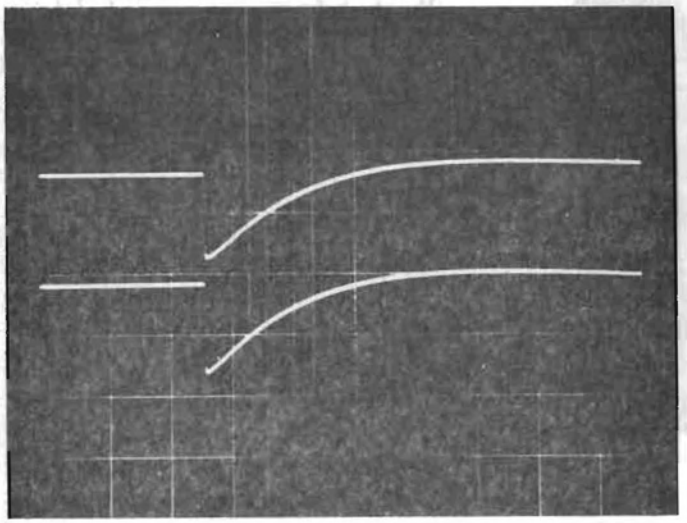

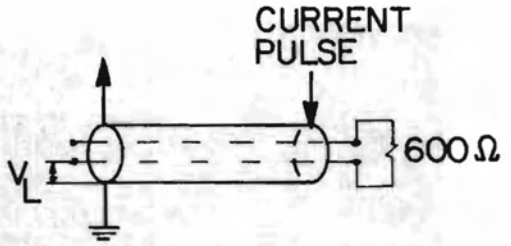

VERTICAL SCALE:
.5 V / div

HORIZONTAL SCALE:
1 msec / div

a. LONGITUDINAL VOLTAGE

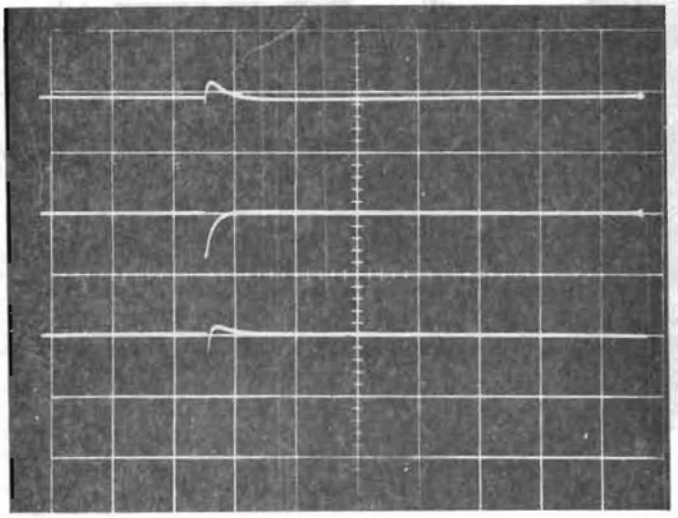

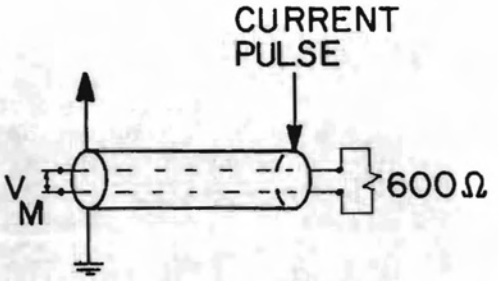

** *

*** VERTICAL SCALE:
.05 V / div

HORIZONTAL SCALE:
1 msec / div

b. METALLIC VOLTAGE

FIG. A-10 MEASURED VOLTAGE PULSES WITH THE WIRE-PAIR TERMINATED BY A 600-OHM RESISTOR

*CORRESPONDING TO DATA PRESENTED IN TABLE 1
**CORRESPONDING TO DATA PRESENTED IN TABLE 2
***A MORE TYPICAL WAVEFORM

Table 1

Termination	Ratio (V_L : V_M)	db
Open-Circuited Condition	20:1	26.0
Short-Circuited Condition	35:1	30.8
103 Ω Resistor	34:1	30.6
600 Ω Resistor	22.5:1	27.0

Table 2

Termination	Ratio (V_L : V_M)	db
Open-Circuited Condition	37:1	31.3
Short-Circuited Condition	40:1	32.0
103 Ω Resistor	36:1	31.1
600 Ω Resistor	35:1	30.8

Appendix B

Results of Computer-Aided Circuit Simulations

1. Objectives

Our over-all objective is to determine the effects that lightning pulses entering the system through underground cables have on various circuits within the CAT-III system. Specifically, the effects of false alarms caused by lightning noise and component failure caused by lightning are the objects of investigation. This is being implemented here through the use of two computer circuit simulation programs, SPICE (Berkeley) and TCAP (Purdue).

2. Present Results

We chose to simulate the lamp driver circuits used in the remote control station to indicate circuit failures such as power supply and transmitter malfunctions in the Glide slope, Remote Control Panel, Localizer, and Marker Beacons. This circuit was readily modeled and simulated using both SPICE and TCAP. The circuit topology used in these programs is as shown in Figure B-1. Transistor and lightning pulse models used in these two programs are shown in Figures B-2 and B-3. The exponential lightning pulse used in SPICE is derived from a standard model used for lightning, while the model used in TCAP is a piece-wise linear approximation to it.

It was desired to keep the peak lightning-induced voltage across the cable constant at 1 kv regardless of the state of the relay. With C_1 (see Figure B-1) in an uncharged state and with the alarm relay open, we have that

$$\frac{1\ \text{kv}}{R_1} = I_{\text{lightning peak}} = \frac{1\ \text{kv}}{6.8\ \text{k}\Omega} = 127\ \text{ma}.$$

With the alarm relay closed, we have

$$\frac{1\ \text{kv}}{\text{cable impedance}} = I_{\text{lightning peak}} = \frac{1\ \text{kv}}{600\Omega} = 1.7\ \text{amps}.$$

The parameters used in the transistor models (see Figures B-2 and B-3) were obtained both from measurements and from published specification data.

The computer simulation results obtained in the cases of the alarm relay opened and closed and with a lightning pulse of both polarities is displayed pictorially in Figures B-4 through B-11.

The case of a positive lightning pulse on the cable with the relay open proved to be interesting since it indicated that lightning is capable of turning the transistor on for a period of time, thus lighting the indicator lamp and indicating a false alarm situation. This verified that lightning is capable of triggering a transistor switch, meaning that it is also potentially capable of switching a transmitter from MAIN to STANDBY to OFF without any intervention from the control tower.

When a negative lightning pulse propagates along the cable with the relay open, the TCAP data indicates that the 6 volt reverse breakdown voltage rating of the emitter-base junction of the 2N2222A is exceeded (as was also reported in [9]). Also, when the relay is in either state, a negative lightning pulse will cause a negative voltage across the electrolytic capacitor C_1 as well as across the emitter-base junction of the 2N2222A, which subjects C_1 to adverse conditions and the possibility of premature failure.

The case of a positive lightning pulse entering the system when the relay is closed is not a situation of serious concern since all this accomplishes is to bring the transistor further into saturation for a period of about 2500μsec.

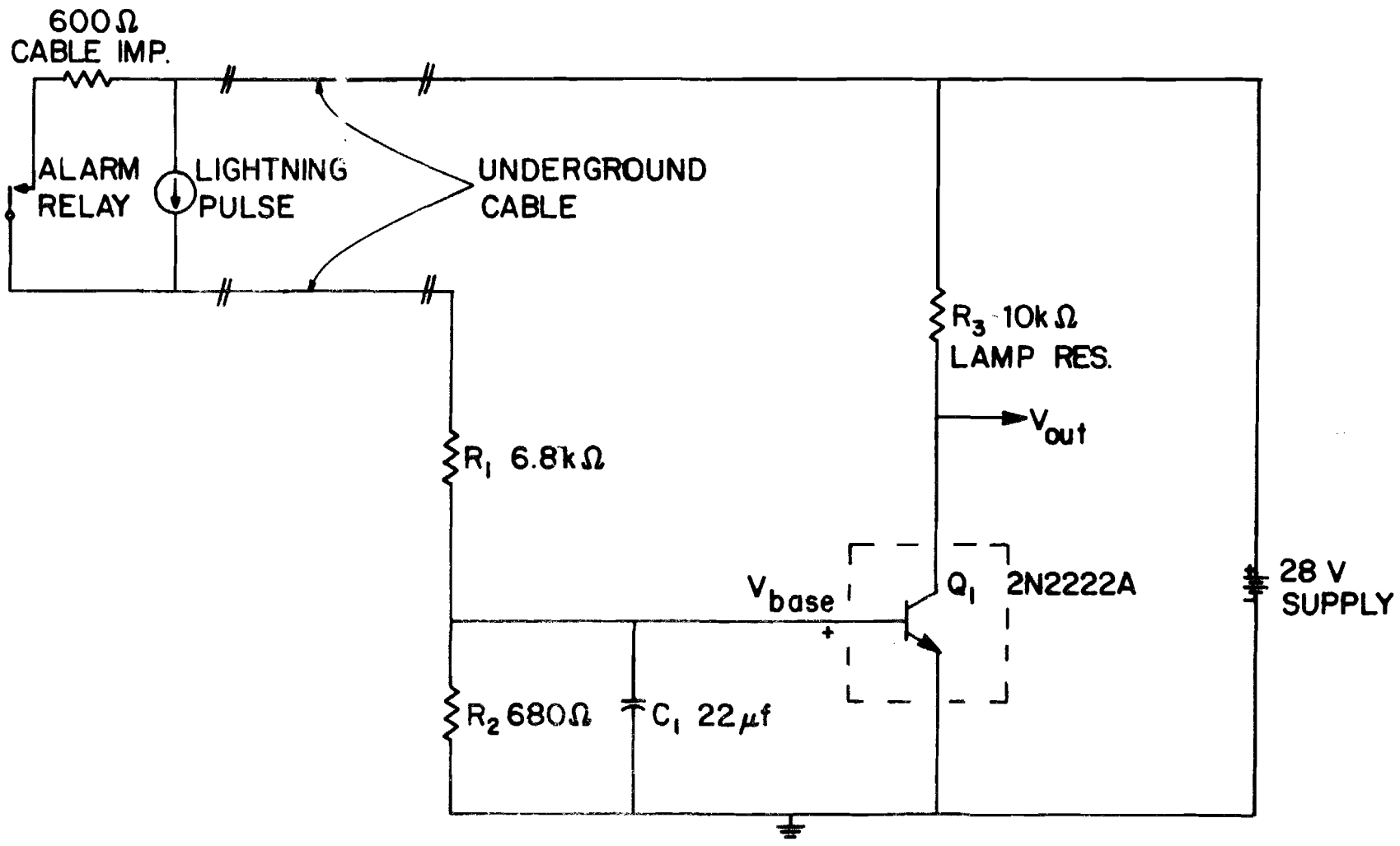

FIG. B-1 LAMP DRIVER MODEL USED IN THE SPICE AND TCAP CIRCUIT SIMULATION PROGRAMS

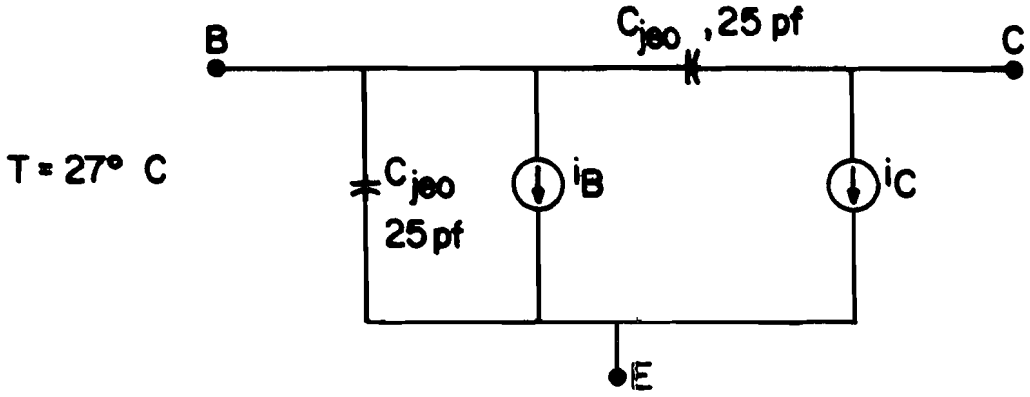

$$i_B = \frac{I_S}{\beta_f}\left[\exp\left(\frac{qV_{BE}}{KT}\right)-1\right]+\frac{I_S}{\beta_R}\left[\exp\left(\frac{qV_{BC}}{KT}\right)-1\right]$$

$$i_C = I_S\left[\exp\left(\frac{qV_{BE}}{KT}\right)-\exp\left(\frac{qV_{BC}}{KT}\right)-\frac{I_S}{\beta_R}\left[\exp\left(\frac{qV_{BC}}{KT}\right)-1\right]\right.$$

$\beta_f = 75$

$\beta_R = 8.75$

I_S (SATURATION CURRENT) $= 7.89 \times 10^{-15}$ A

Transistor Model (Ebers-Moll)

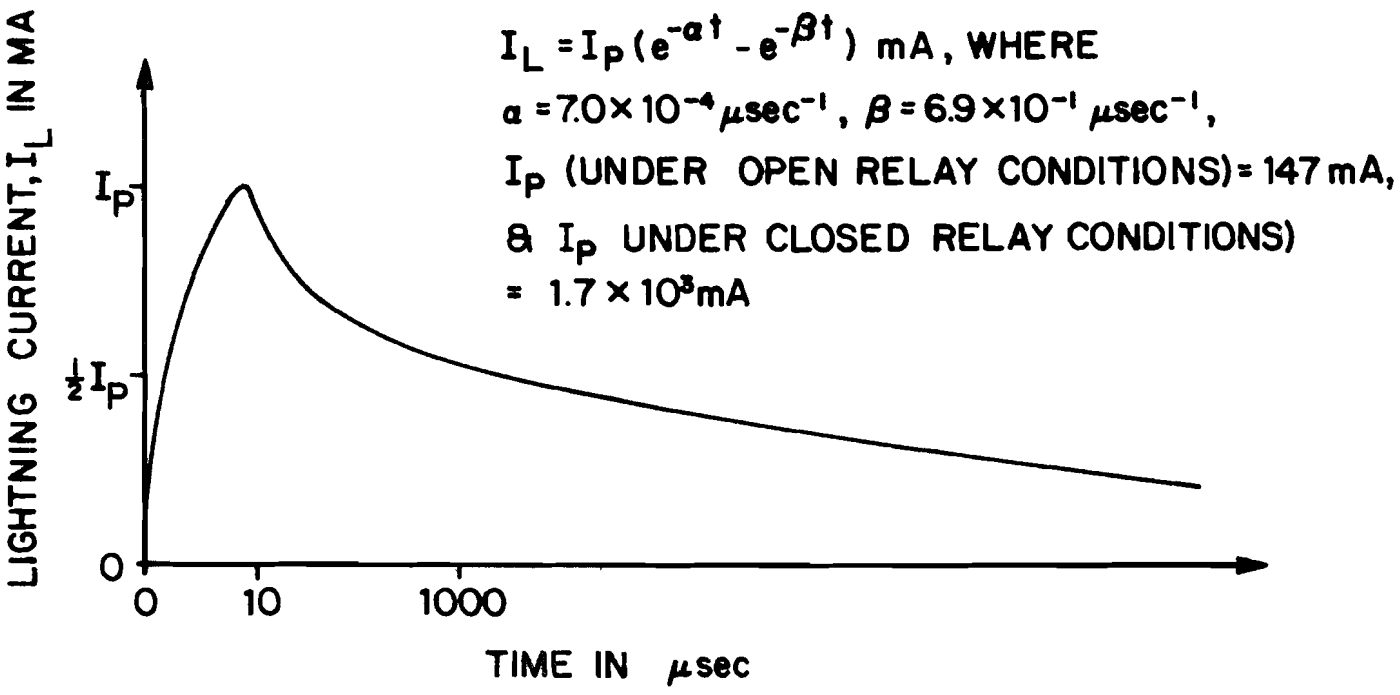

Lightning Pulse Model

Figure B-2 SPICE PROGRAM SIMULATION DETAILS

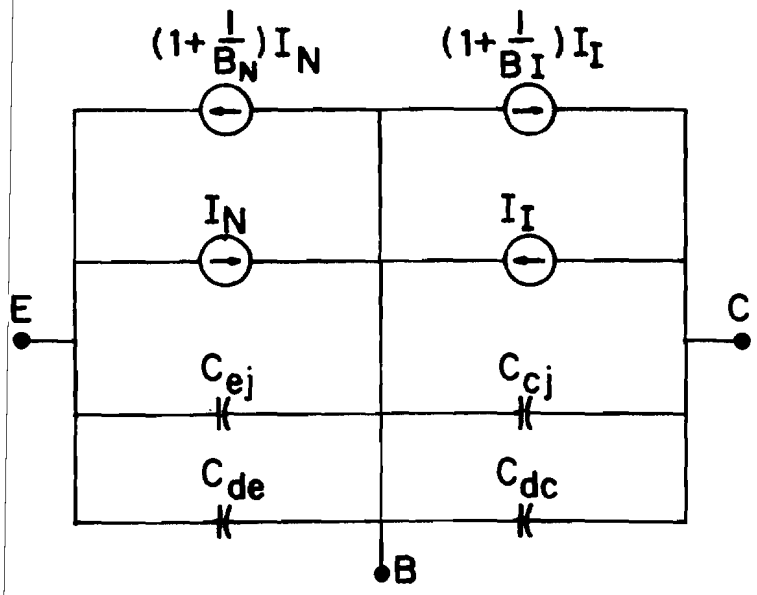

$I_N = I_{ES}(e^{\theta_N V_{be}} - 1)$

$I_I = I_{cs}(e^{\theta_r V_{bc}} - 1)$

VALUES USED

$B_N = 75$

$B_I = 1$ (default value)

$I_{ES} = I_{cs} = 10^{-13}$ (amps)

$\theta_I = \theta_N = 40$ (default value)

$C_{de} = C_{dc} = 0$ (default value)

$C_{cj} = 17$ pf

$C_{ej} = 25$ pf

TRANSISTOR MODEL USED IN TCAP SIMULATION

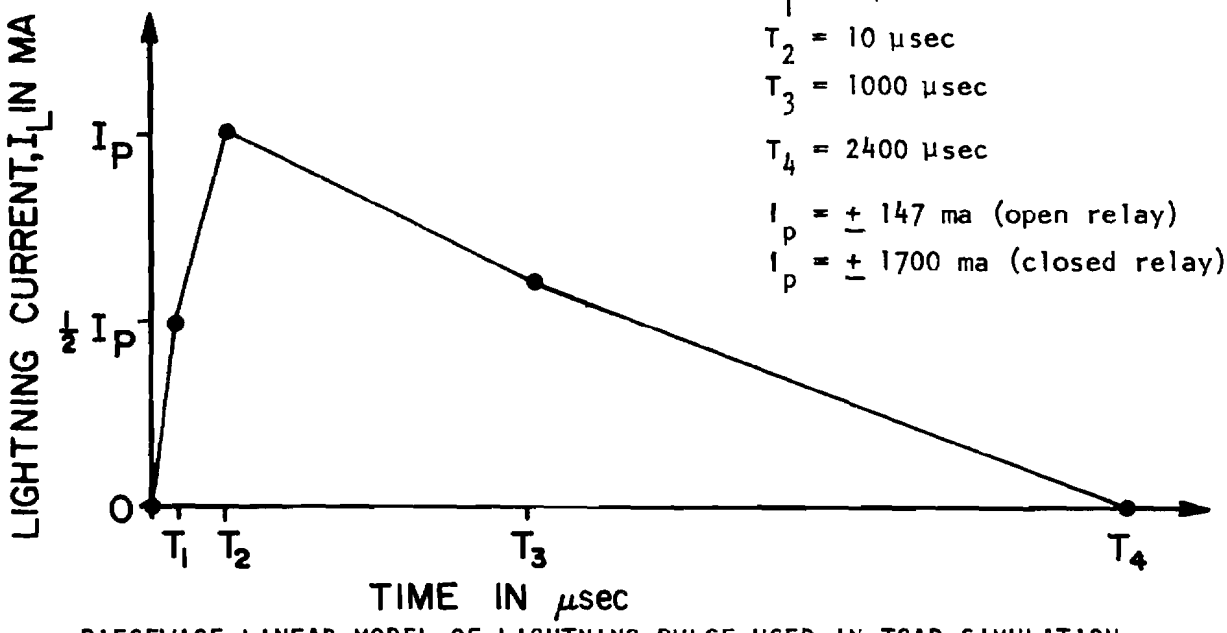

$T_1 = 1$ µsec

$T_2 = 10$ µsec

$T_3 = 1000$ µsec

$T_4 = 2400$ µsec

$I_p = \pm 147$ ma (open relay)

$I_p = \pm 1700$ ma (closed relay)

PIECEWISE LINEAR MODEL OF LIGHTNING PULSE USED IN TCAP SIMULATION

Fig. B-3 TCAP PROGRAM SIMULATION DETAILS

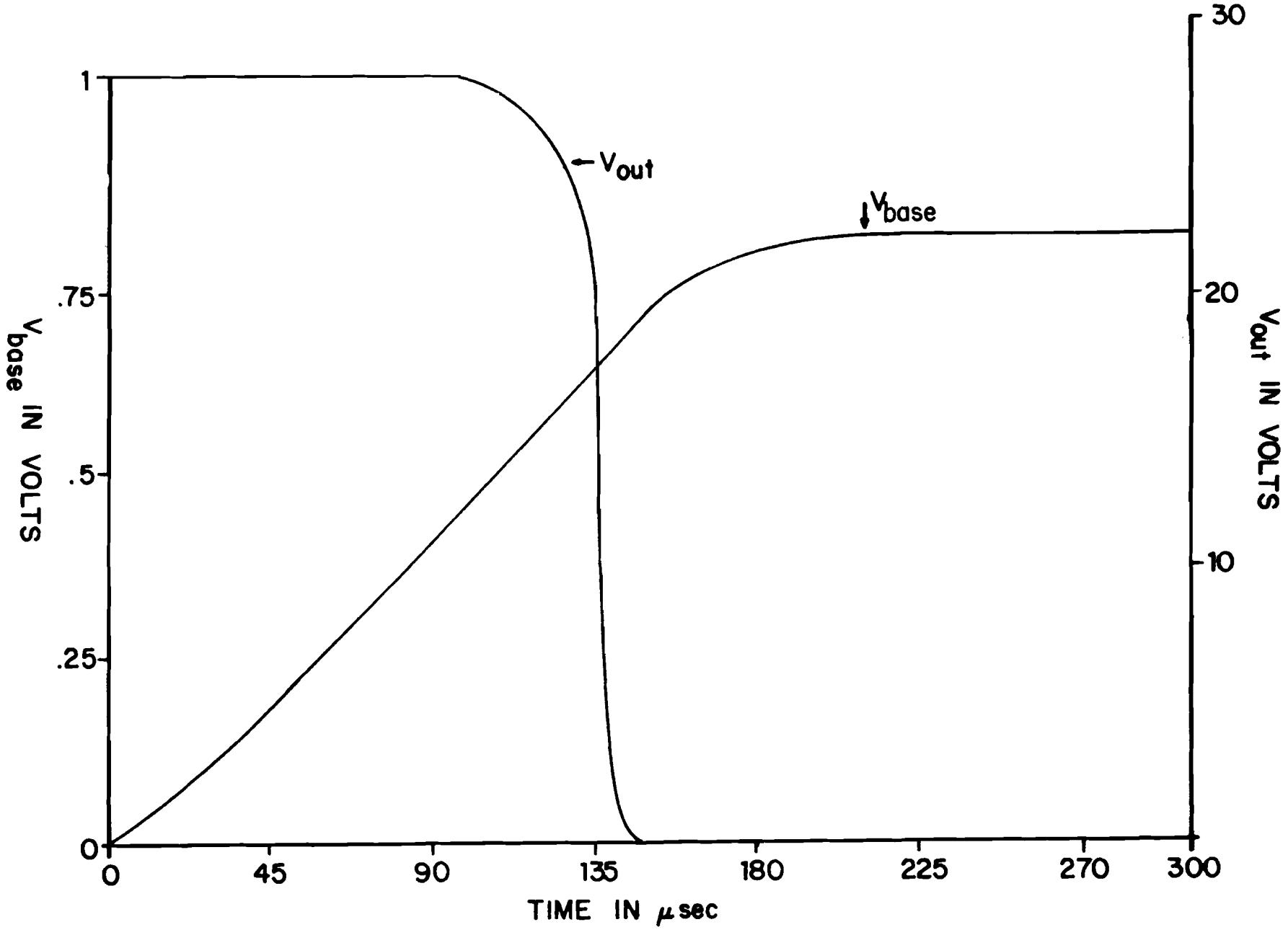

FIG. B-4 SPICE SIMULATION DATA LAMP DRIVER CIRCUIT POSITIVE 1KV PULSE - RELAY OPEN

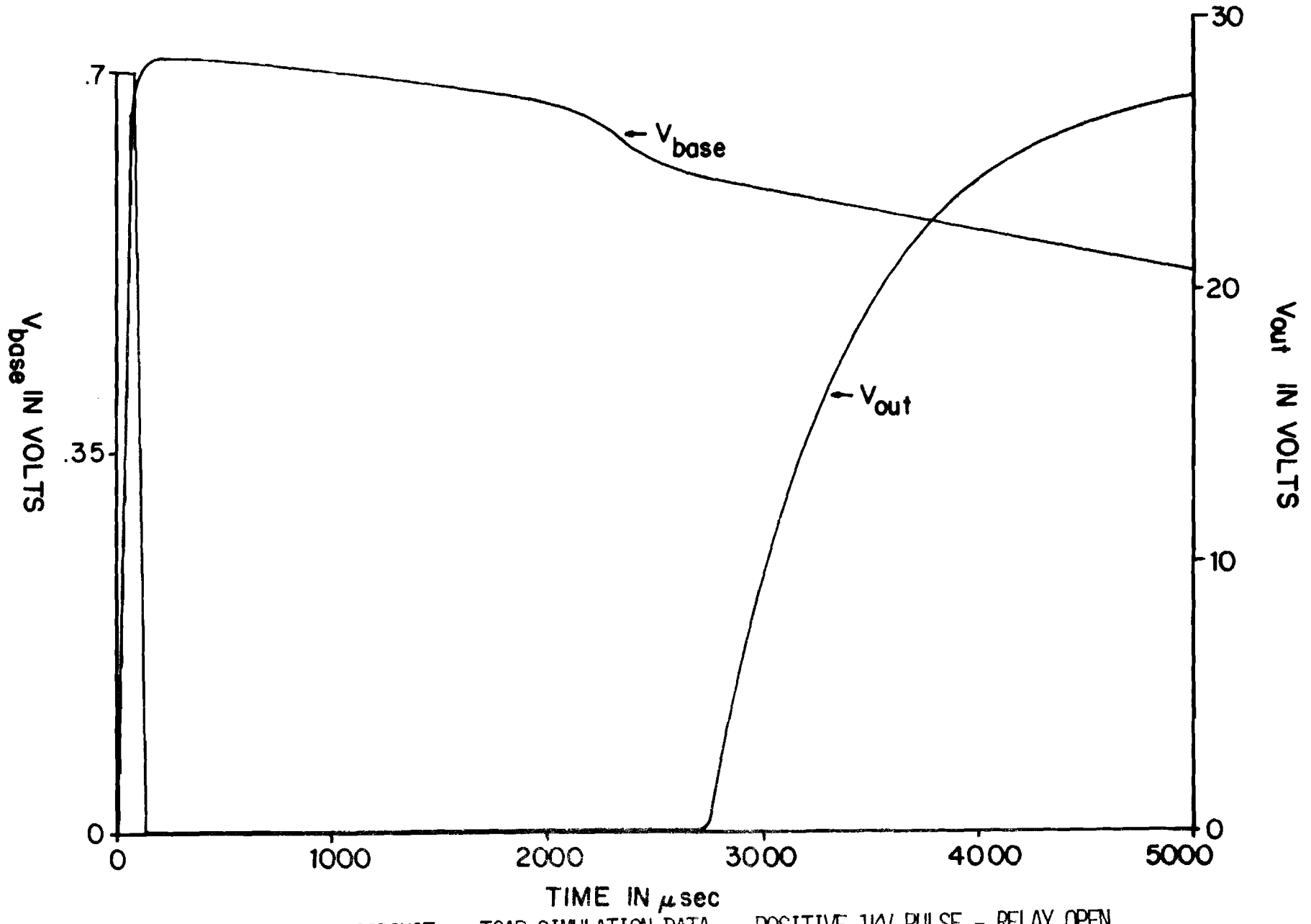

FIG. B-5 LAMP DRIVER CIRCUIT TCAP SIMULATION DATA POSITIVE 1KV PULSE - RELAY OPEN

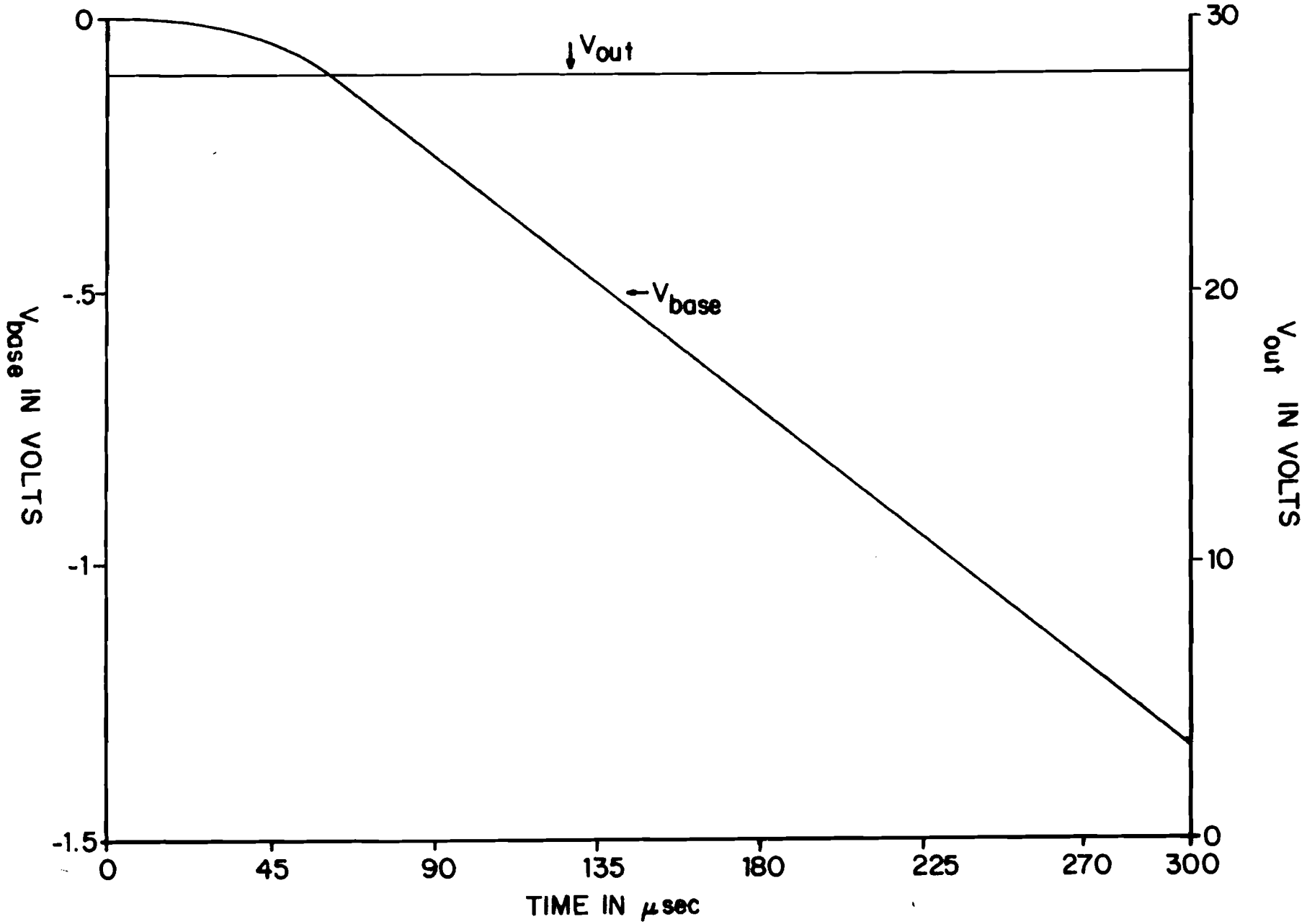

FIG. B-6 SPICE SIMULATION DATA LAMP DRIVER CIRCUIT NEGATIVE 1KV PULSE - RELAY OPEN

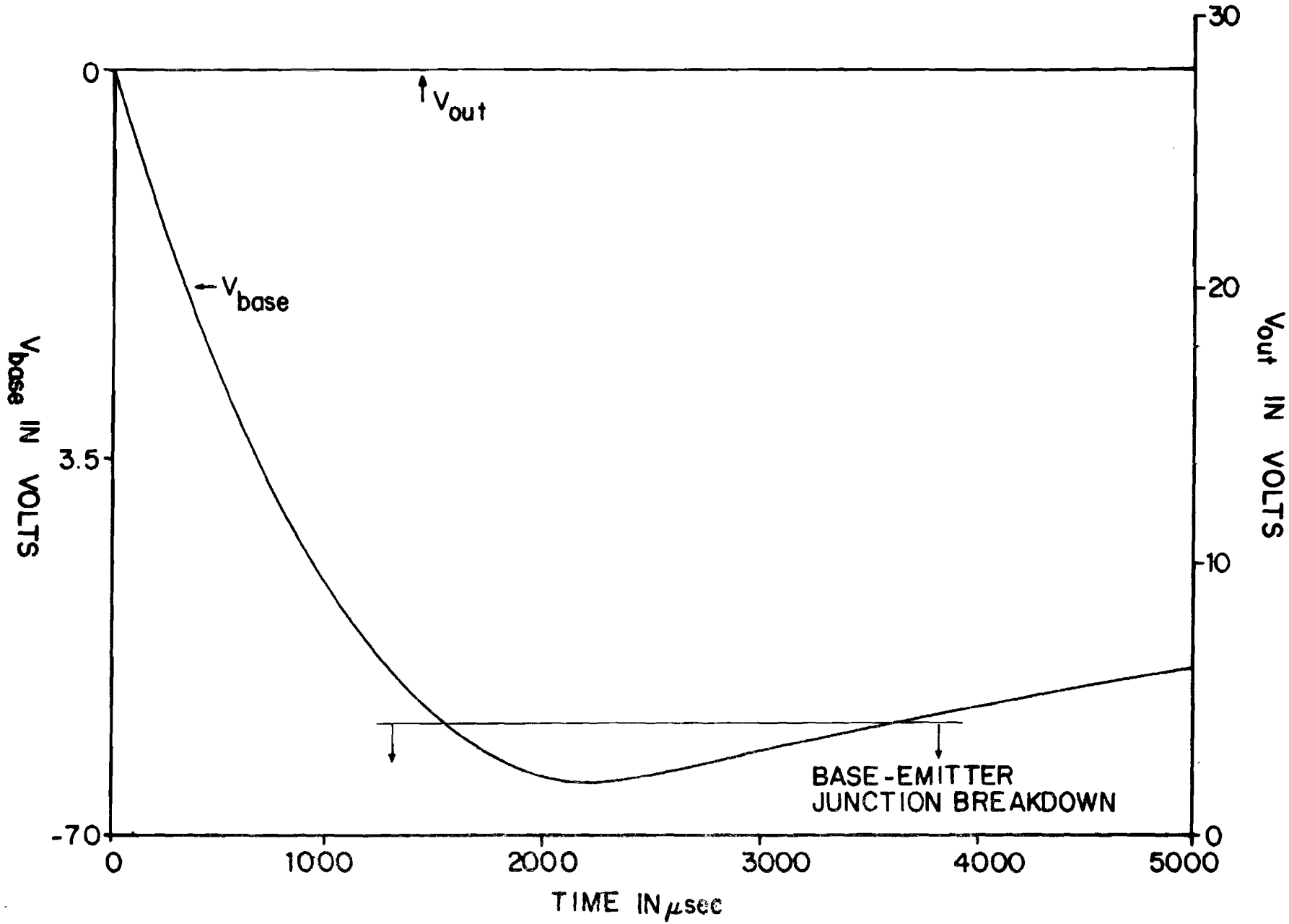

FIG. B-7 LAMP DRIVER CIRCUIT TCAP SIMULATION DATA NEGATIVE 1KV PULSE - RELAY OPEN

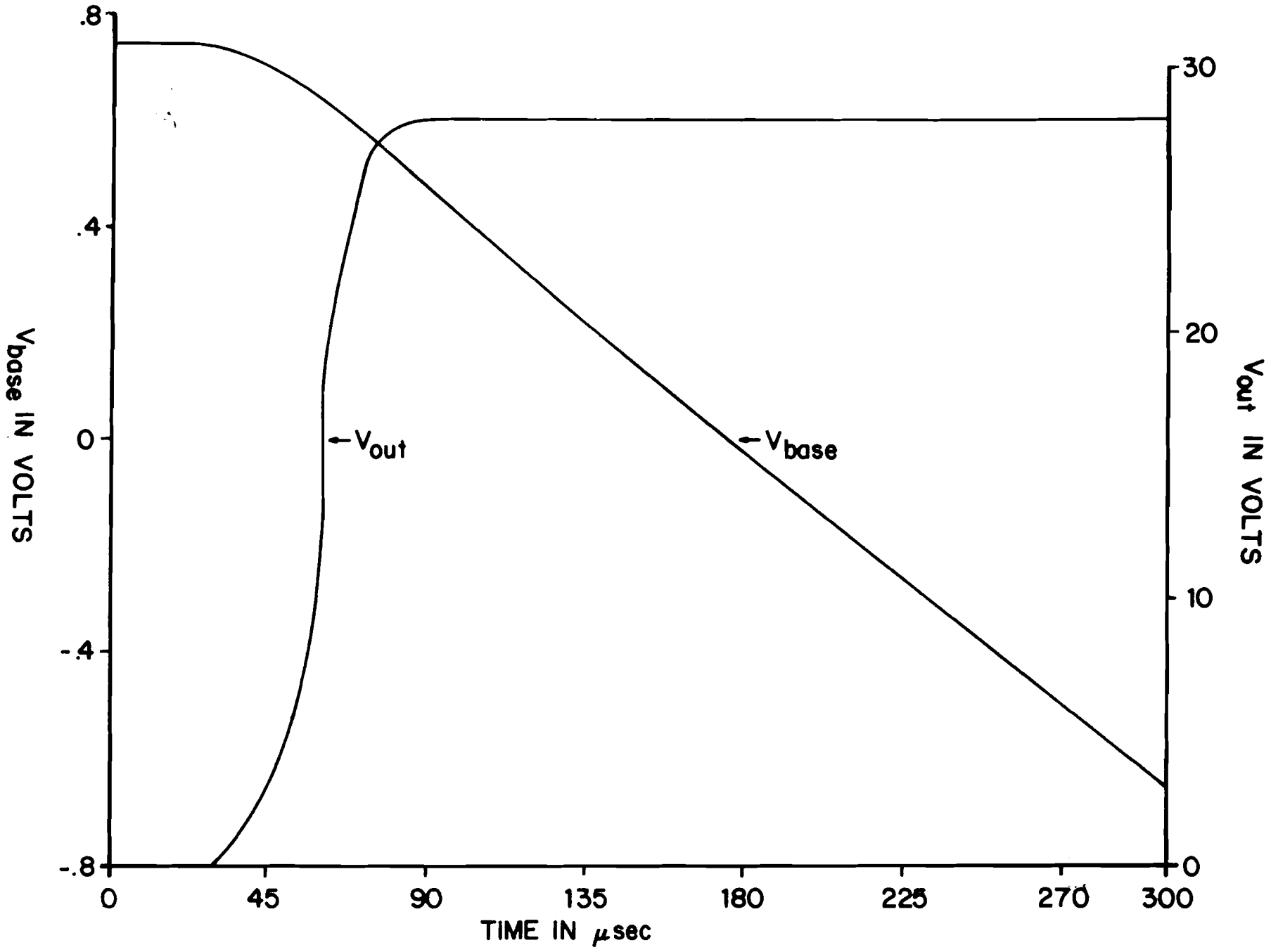

FIG. B-8 SPICE SIMULATION DATA LAMP DRIVER CIRCUIT NEGATIVE 1KV PULSE - RELAY CLOSED

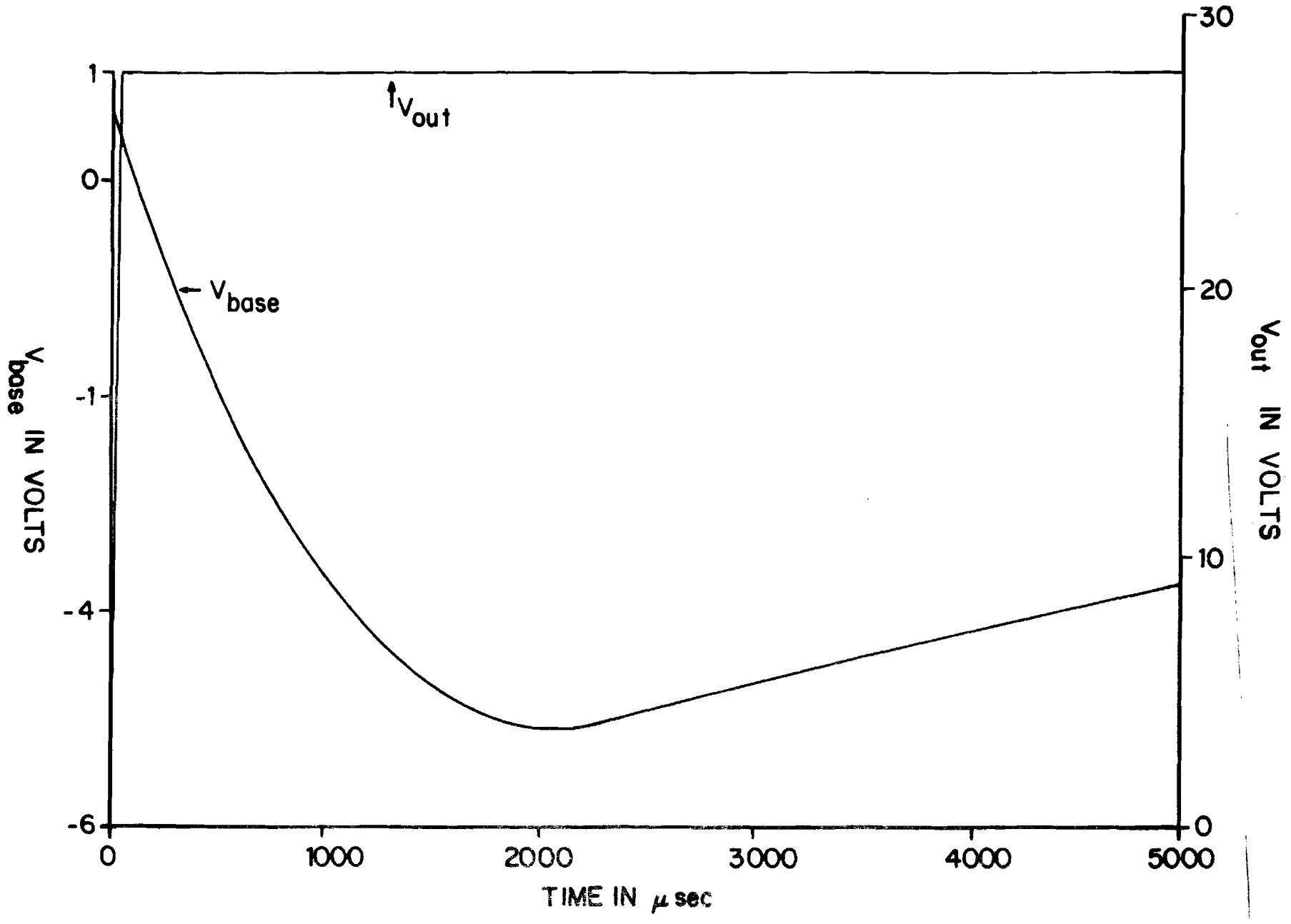

FIG. B-9 LAMP DRIVER CIRCUIT TCAP SIMULATION DATA NEGATIVE 1KV PULSE - RELAY CLOSED

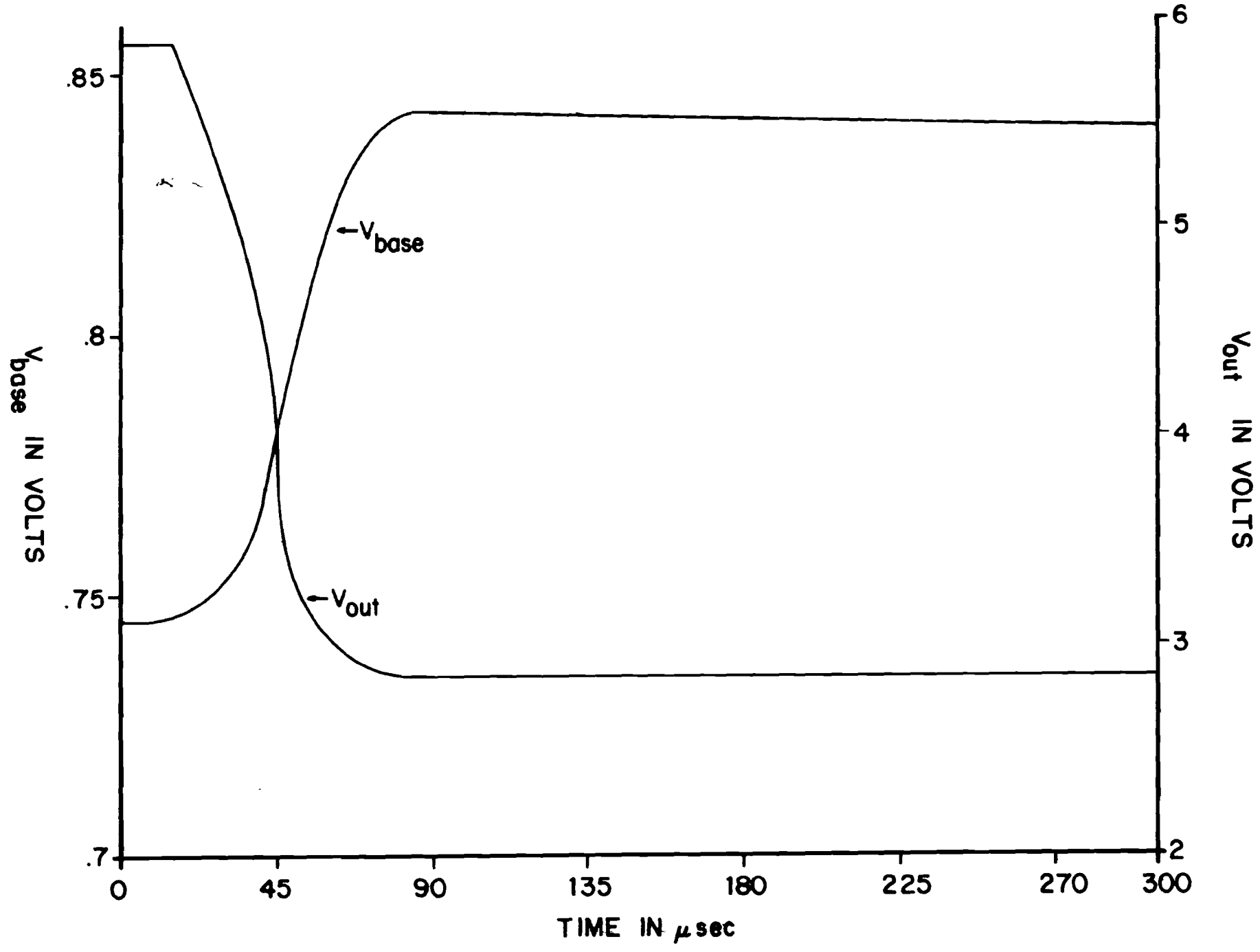

FIG. B-10 SPICE SIMULATION DATA LAMP DRIVER CIRCUIT POSITIVE 1KV PULSE - RELAY CLOSED

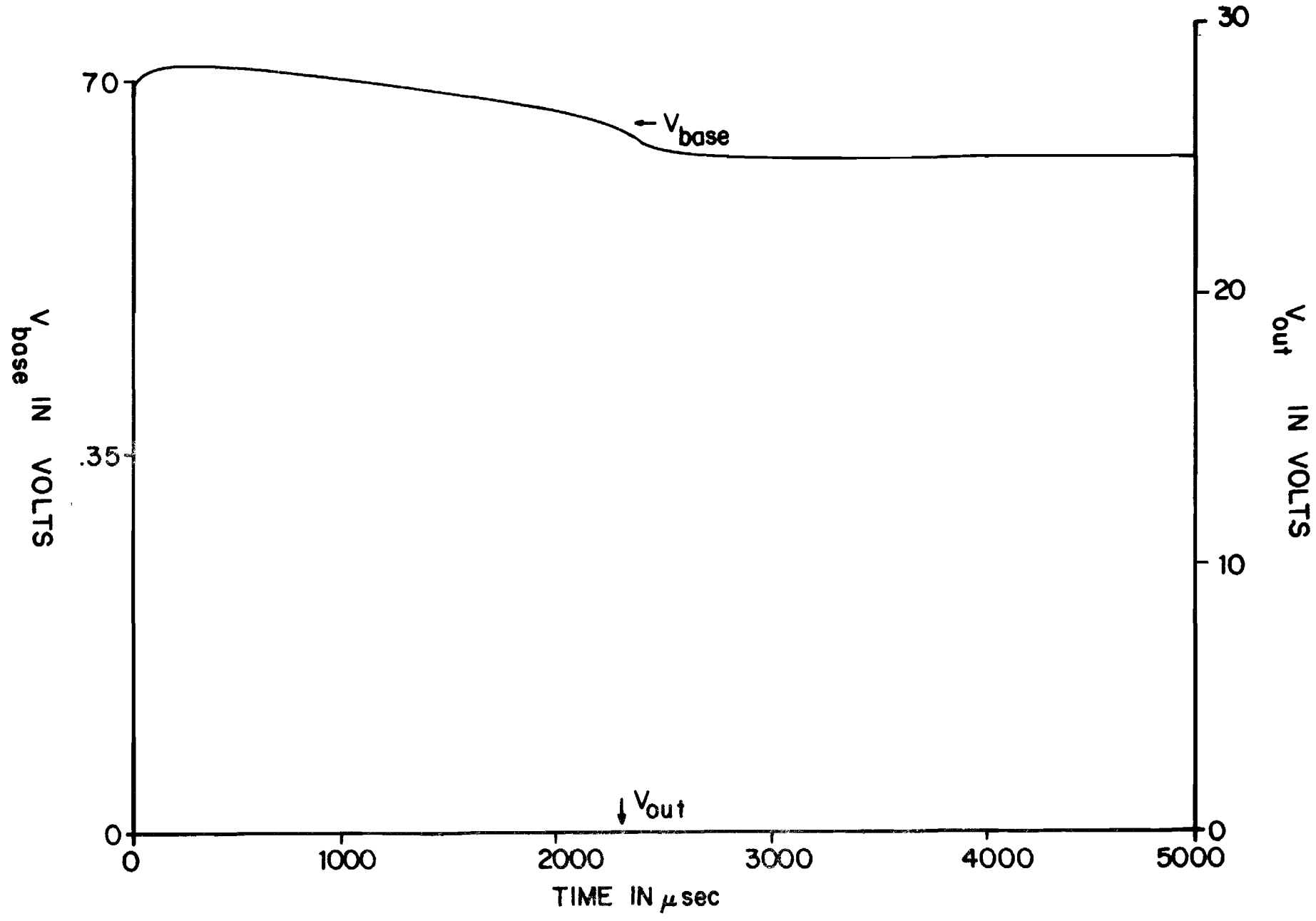

FIG. B-11 LAMP DRIVER CIRCUIT TCAP SIMULATION DATA POSITIVE IKV PULSE - RELAY CLOSED

Appendix C

The Proposed Tone Signaling System

We will describe in this appendix some of the methods and circuitry now being considered for tone signaling in the CAT-III ILS at NAFEC, Atlantic City, New Jersey.

1. Tone Oscillators

Tone oscillators cost about $5 to $10 per signal channel or $35 to $70 for seven channels.

The wein-bridge oscillator circuit in Figure C1 can be used as a low-cost sinusoidal source [Ref. 8]. The wein-bridge components determine the frequency. Thus, choosing high quality resistors and capacitors maintains the frequency variation with temperature within specs.

The signal returned to the non-inverting input of the amplifier from the wein-bridge provides the positive feedback needed to sustain oscillation. In order to keep the operational amplifier operating in its linear region, negative feedback is provided at the inverting terminal via the 50 KΩ potentiometer. The setting of this potentiometer will determine the amplitude, A, of the output. Making this amplitude as large as possible will lower the harmonic distortion. How large an amplitude the circuit will provide is a function of the load resistance as well. Figure C2 shows the relationship between the maximum value of A before the output saturates and the load resistance R_L.

Using the bridge component values indicated in Figure C1 and a load C3 resistance of 15 KΩ,a 1000 Hz sinusoidal output signal is displayed in Figure . A spectral analysis of this same signal is shown in Figure C4. The significant harmonics are the third, fifth, and seventh. The harmonic distortion from these frequencies was found to be roughly 4%. Small harmonic components should not be a problem since the standard touch-tone frequencies (that we intend to use) have been chosen to be non-harmonically related.

2. An Off-the-Shelf Tone Detection System

An off-the-shelf tone detection system costs $200 for seven signal channels. Commercially available active tone decoder circuits have already been received by Purdue and will soon be undergoing testing. These were supplied by Mr. Harold Tenney of Kinetic Technology, Inc., and include

7 FM-700 series active bandpass filters, and

1 FM-800 automatic gain control chip.

These are to be connected as shown in Figure C5. Current prices of these items in 100 quantity lots are $29 for the FM-700 chips and $22 for the FM-800.

3. Phase-Locked Loop Tone Decoder

The phase-locked loop tone decoder costs $10 per channel. An alternate tone decoder system being considered is the Signetics NE567 phase-locked loop which will signal the presence or absence of a tone whose frequency falls within preset values. The circuit in Figure C6 is capable of achieving bandwidths of less than 1% of the center frequency. The center frequency stability is determined by the temperature coefficients of R_1 and C_1. The output voltage may be as high as +15VDC making the output compatible with DTL and TTL logic.

The center frequency (f_0) is determined by the formula $f_0 = 1/(R_1C_1)$. The bandwidth (BW) is a function of the input voltage, f_0, and the capacitor C_z. The relation is $BW \cong \sqrt{1070}\ V_i/f_0C_z$ where V_i is the amplitude of the input tone (RMS), f_0 the center frequency (Hz), and C_z the capacitance in F. Because of internal limiting, the bandwidth is independent of V_i for amplitudes greater than or equal to 200 mV (RMS). This constant bandwidth is achieved at the cost of having the decoder sensitive to the subharmonic frequencies $f_0/3$, $f_0/5$, etc. The value of C_3 is chosen to be at least twice the value of C_z. Increasing the value of C_3 will lengthen the turn-on and turn-off delays at the output. This provides further immunity to spurious outputs caused by transient frequencies and eliminates chattering of the output for inputs near the band edges.

The circuit in Figure C6 was tested with:

$$R_1 = 10.13\ k\Omega,\quad C_1 = .1\mu f \pm 10\%,\quad C_2 = .68\mu f \pm 10\%,\quad C_3 = ZC_2.$$

The center frequency is around 1 kHz and the bandwidth is a function of the input voltage, V_i. Figure D4 displays the resulting output voltage (5v) versus the incoming tone's frequency for various values of V_i. The traces start at 860 Hz and are swept horizontally at 37.5 Hz/cm. The center graticule is 1000 Hz. The top trace is the result of a 50 mV (RMS) incoming amplitude. Each trace represents a 50 mV (RMS) increase in amplitude with the bottom trace remaining the same for voltages above 200 mV (RMS). The bandwidths are 103 Hz, 131 Hz, 140 Hz, and 143 Hz for the 50 mV (RMS) to 200 mV (RMS) inputs respectively.

This phase-locked loop circuit is much cheaper than the KTI module described above. It is more vulnerable to false signals that occur on telephone lines, but it may well be adequate for the signal lines of the ILS. The tests of Phase II

will determine if this less expensive decoder will do the job with sufficient reliability

Cost Estimates:

The total cost of a seven channel signaling system is

Isolation Transformers (2)	$10
Drainage Reactances (2)	10
Tone Generators (7)	35 - 70
Tone Detectors	70 - 200
TOTAL	$125 - $290

The cost per signal channel is thus between $18 and $42. The difference depends on whether or not the phase-locked loop detectors are adequate.

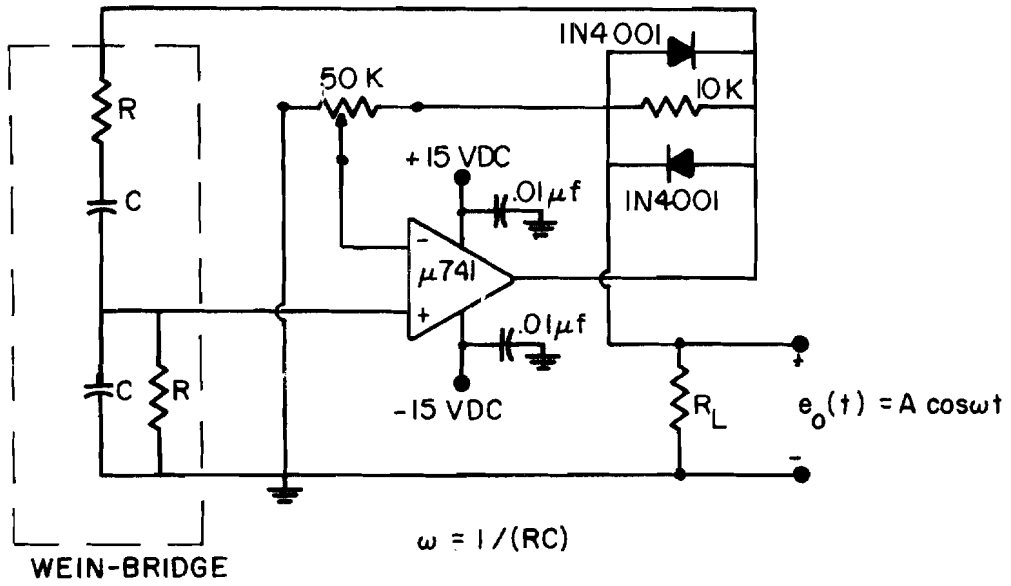

FIG. C-1 WEIN-BRIDGE OSCILLATOR

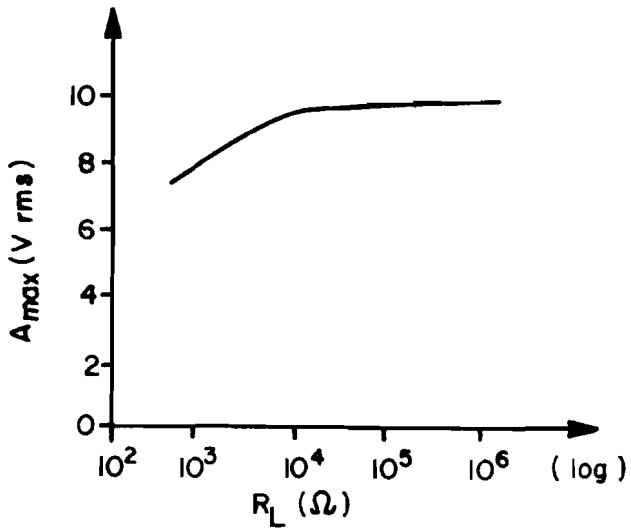

R = 1.61 KΩ
C = .1 μ F ± 10 %
ω = 1000 Hz

FIG.C-2. MAXIMUM AMPLITUDE VS. LOAD RESISTANCE FOR THE WEIN-BRIDGE OSCILLATOR

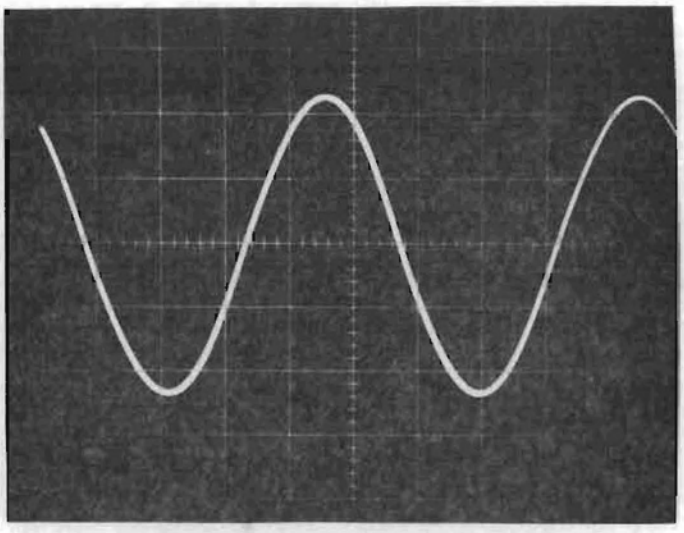

FIG. C-3 OUTPUT WAVEFORM OF WEIN-BRIDGE OSCILLATOR

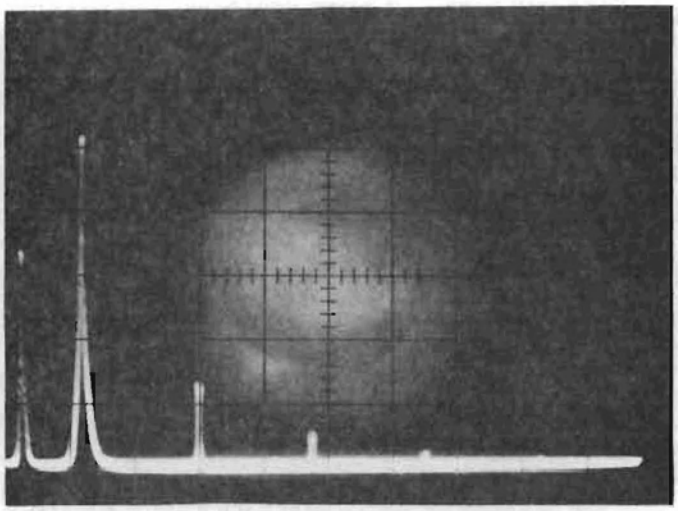

FIG. C-4 SPECTRUM ANALYSIS OF WAVEFORM IN FIG C-3

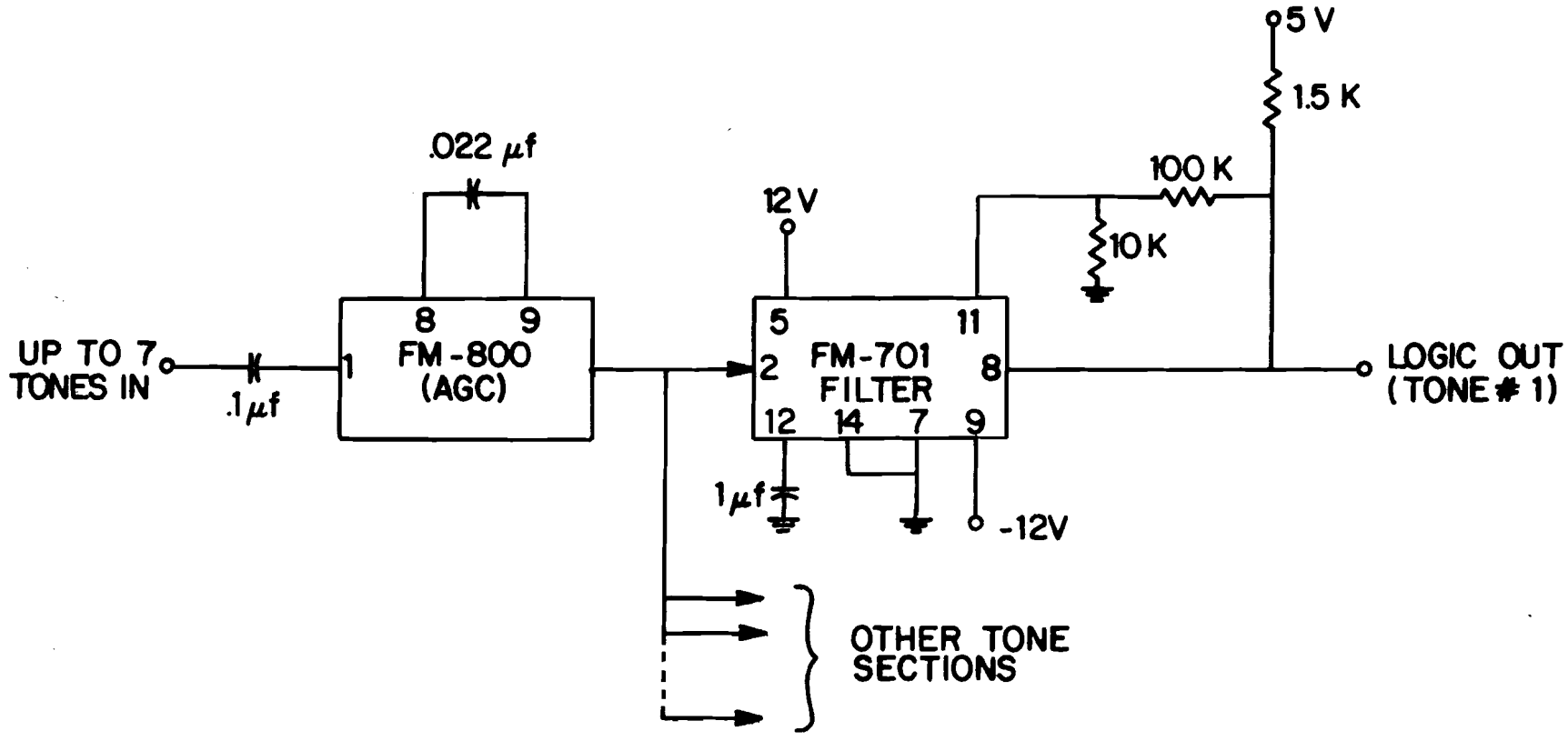

FIG. C-5 A CURRENTLY-CONSIDERED TONE DECODING SYSTEM USING KTI CAIPS

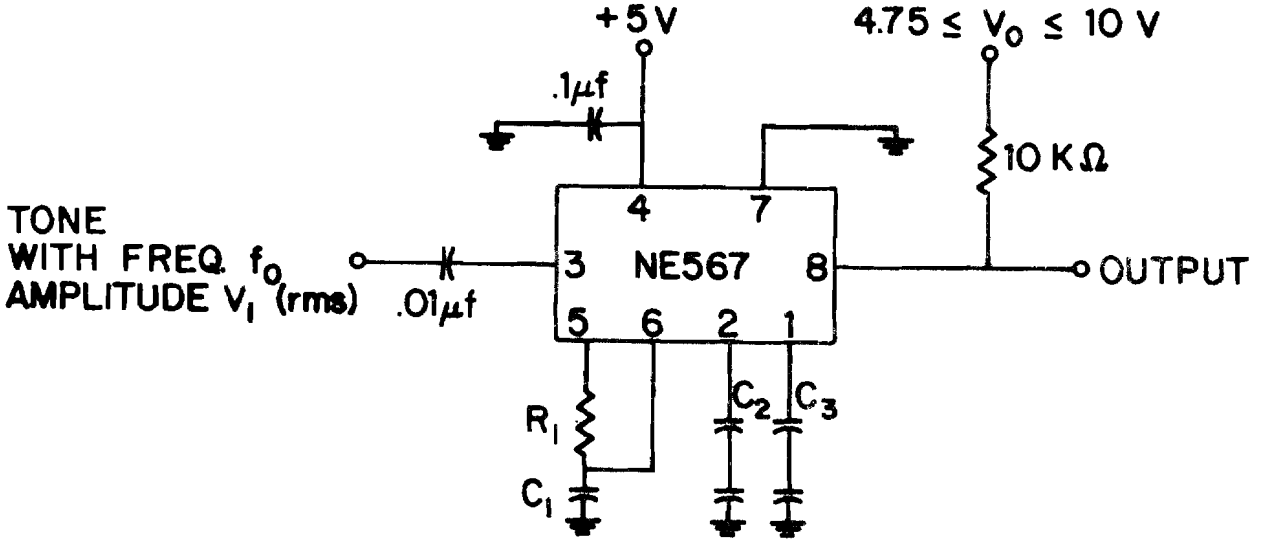

FIG. C-6 A PHASE-LOCKED LOOP TONE DECODER CIRCUIT

74

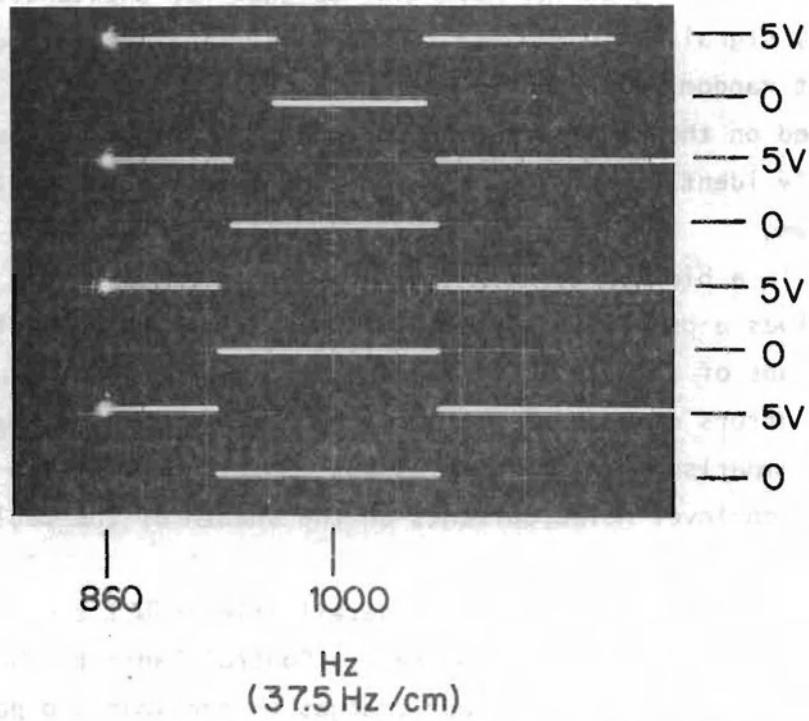

FIG. C-7 OUTPUT VS. FREQUENCY FOR THE PHASE-LOCKED LOOP DECODER

Appendix D

Automated Tester

An automated testing device has been designed for unattended continuous testing of any signaling scheme for the MARK III Instrument Landing System. It provides eight randomly selected binary output signals (on-off) and counts any errors detected on the eight received signals. The input and output interfaces are essentially identical to the corresponding circuits currently used in the MARK III system.

Figure D1 is a block diagram of the system. A clock with a period of 3 to 20 seconds drives a pseudo-random sequence generator of length fifteen. The odd numbered taps of this shift register determine the eight signals being received. The number of errors detected is recorded by a two decade decimal counter. This send-receive comparison will be carried out simultaneously with the automatic injection of high-level noise currents on the sheath of the cable carrying the test signals.

Looking now at the circuits in some detail (Figure D2), the input interface is identical to the circuit used in the Remote Control Panel to check the system performance. This circuit with minor changes to the load and power supply is used throughout the ILS to receive the binary communication signals. Likewise, the output interface uses relay contacts which is the standard binary signaling technique for the MARK III system. Three inverter/buffers from a 7406 TTL package are used to drive the relays, and an exclusive-or gate (7486 TTL) is used to compare the sent and received signals. Note that there are eight identical interface circuits used in the tester.

Two eight bit shift registers (74164 TTL) with an exclusive-or gate make up the basic pseudo-random sequence generator. (See Figure D3.) This approach to selecting the signals to be sent minimizes the correlation between any two signals. The extra exclusive-or gate and pushbutton switch are used to start the sequence if all 16 registers are zero when the power is applied. Once started, it will continue indefinitely, with the sequence repeating only after all 32,767 unique combinations have been presented to the outputs. The inhibit signals are used to inhibit an error count for the period required for the relays and system under test to change state on those signal lines whose value will be changing. This period is adjustable from 0.1 to 3 seconds.

The error detector (Figure D4) passes a count signal whenever an error is detected on any of the eight lines, unless that error is because of the delay (electrical or mechanical) inherent in changing state on a signal line.

The error counter (Figure D5) utilizes a pair of asynchronous decade counters (7490 TTL), seven segment decoder drivers (7447 TTL), and seven segment LED readouts.

The necessary system timing is provided by an osci'lator (NE555) and a dual monostable multivibrator (74123 TTL). (See Figure D6.) An indication of the length of the inhibits and period between random sets of signals is provided by an LED located in the upper right corner of the counter readouts.

The tester as described above is currently in the final stages of construction. See the photograph of Figure D7.

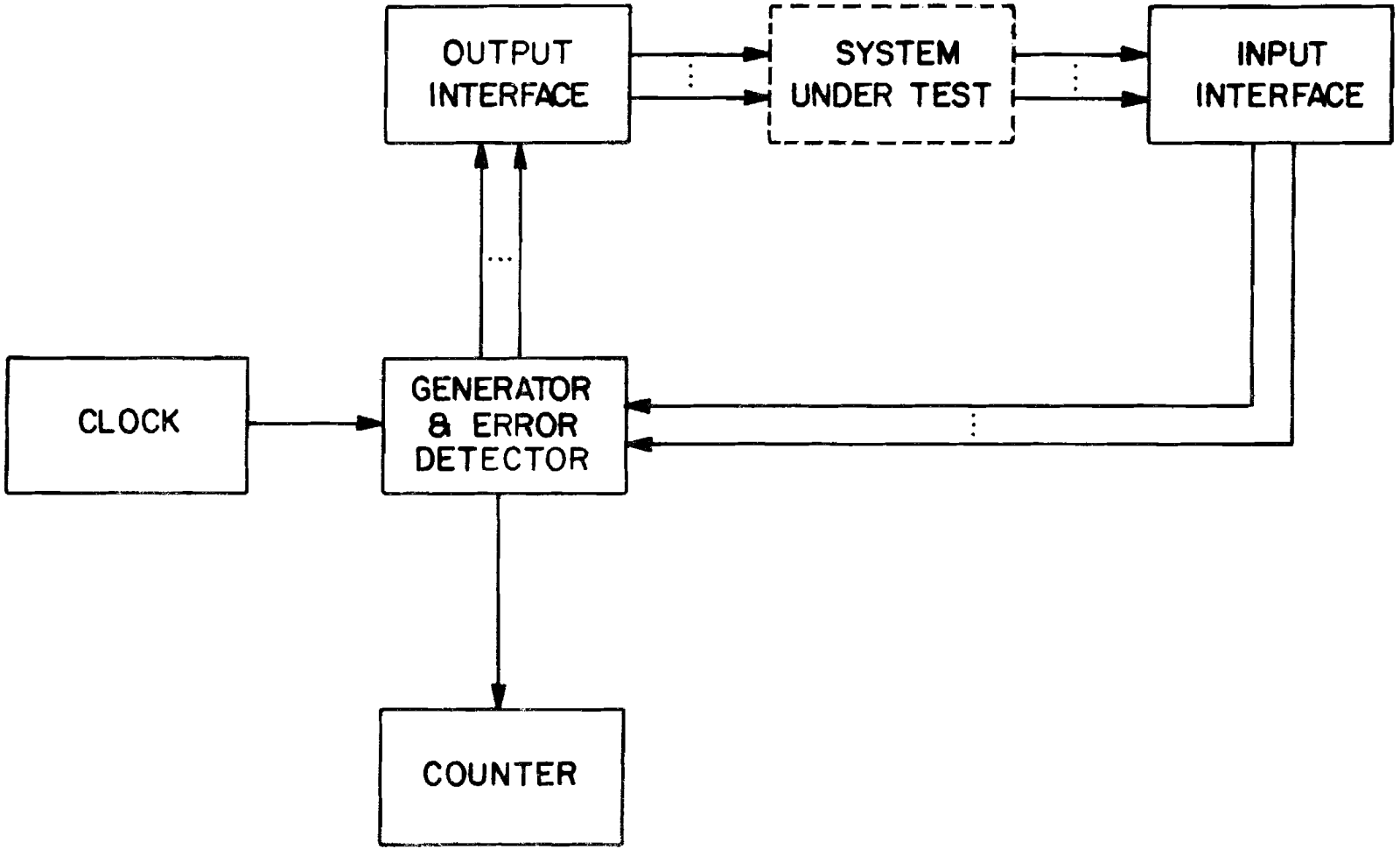

FIG. D-1 DIAGRAM: AUTOMATED TESTER

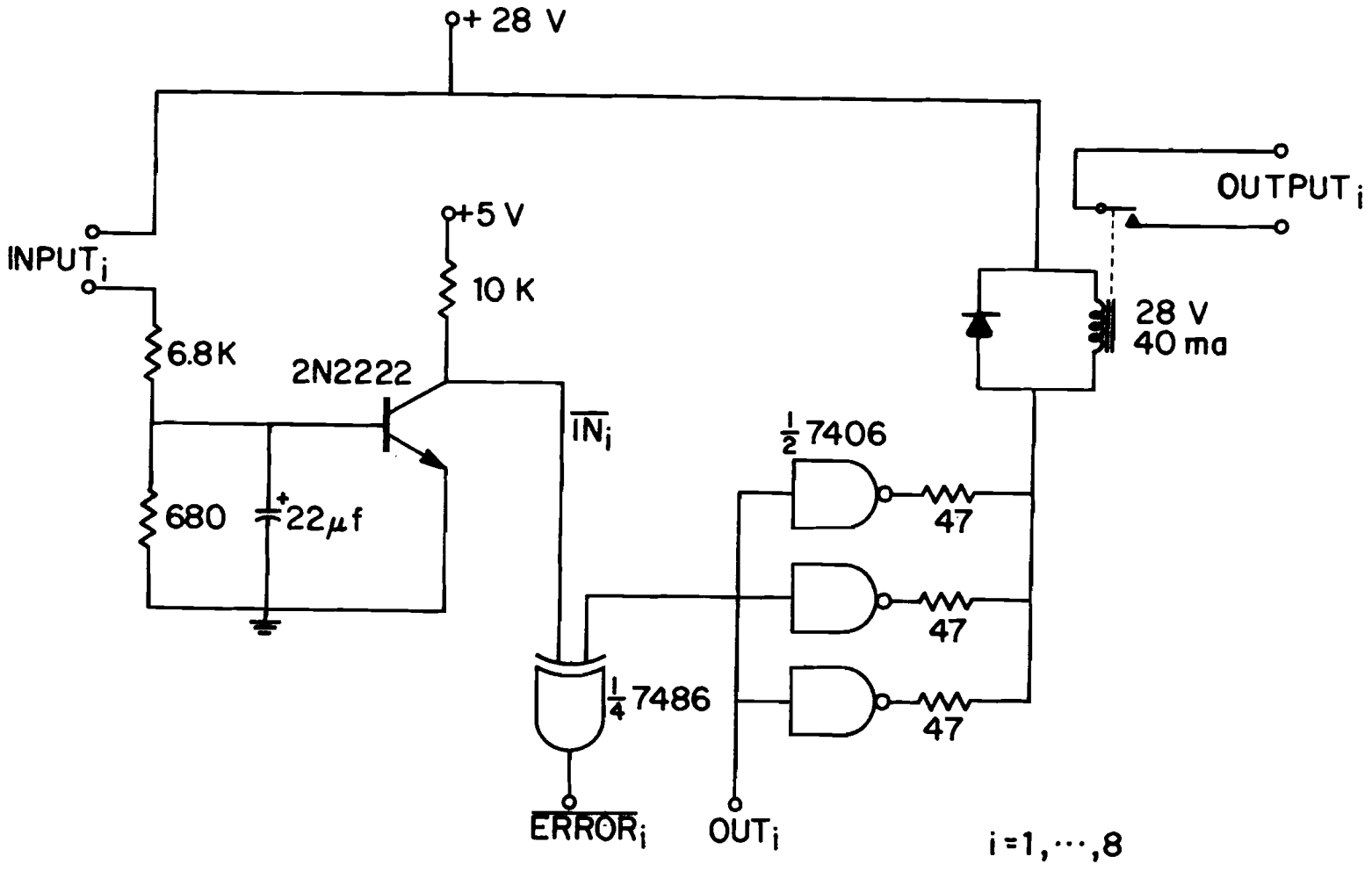

FIG. D-2 AUTOMATED TESTER: INTERFACE

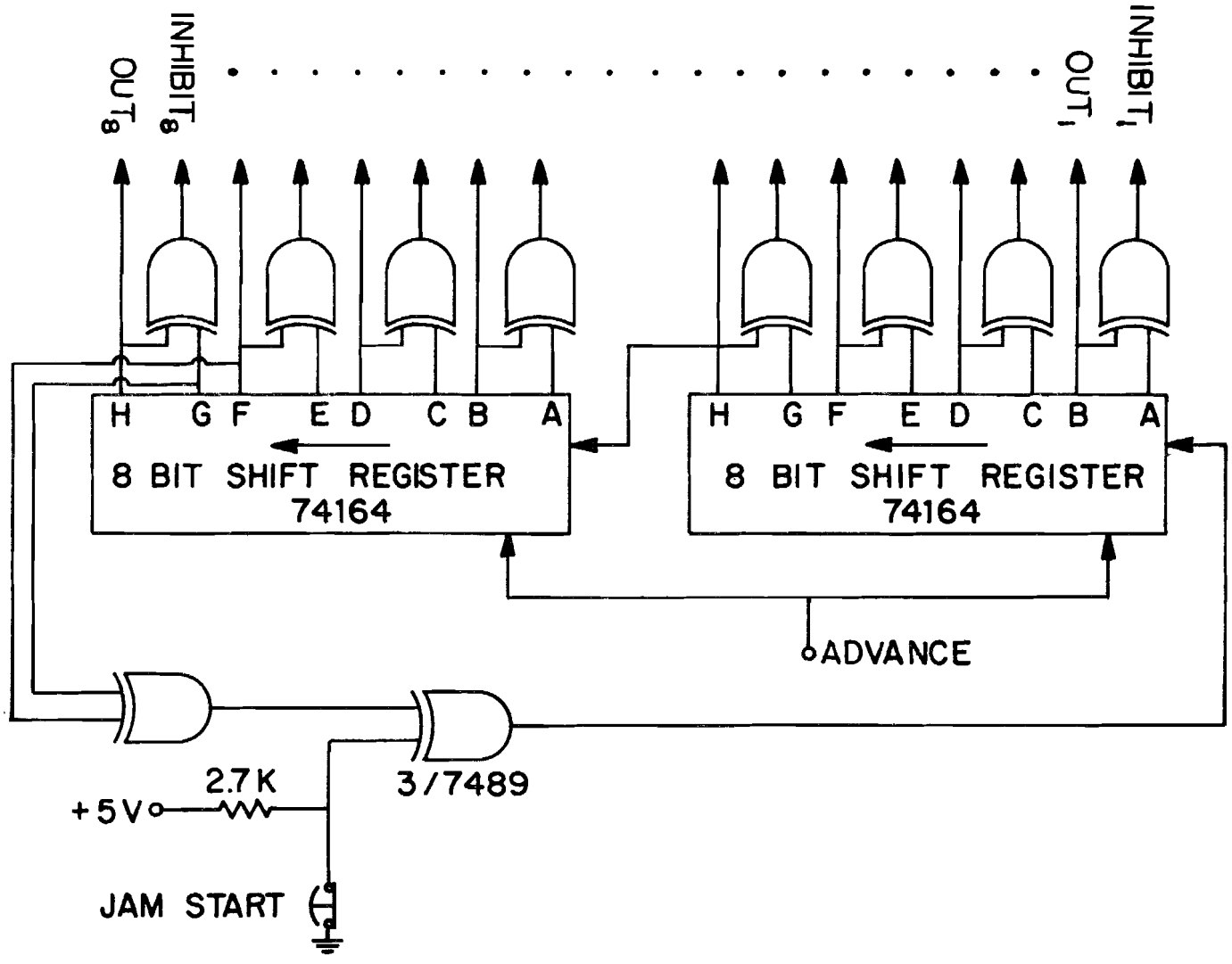

FIG. D-3 AUTOMATED TESTER: GENERATOR

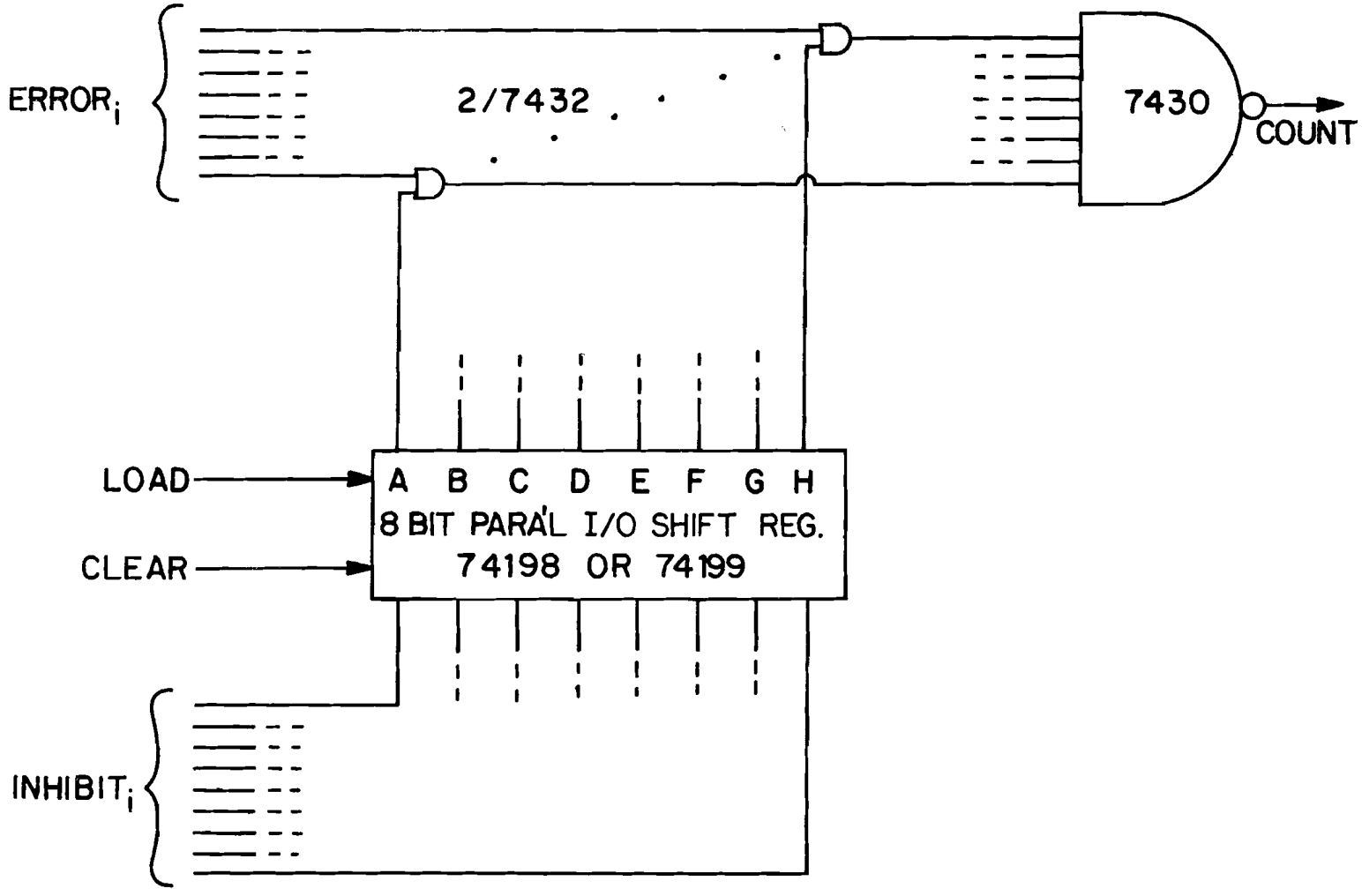

FIG. D-4 AUTOMATED TESTER: ERROR DETECTOR

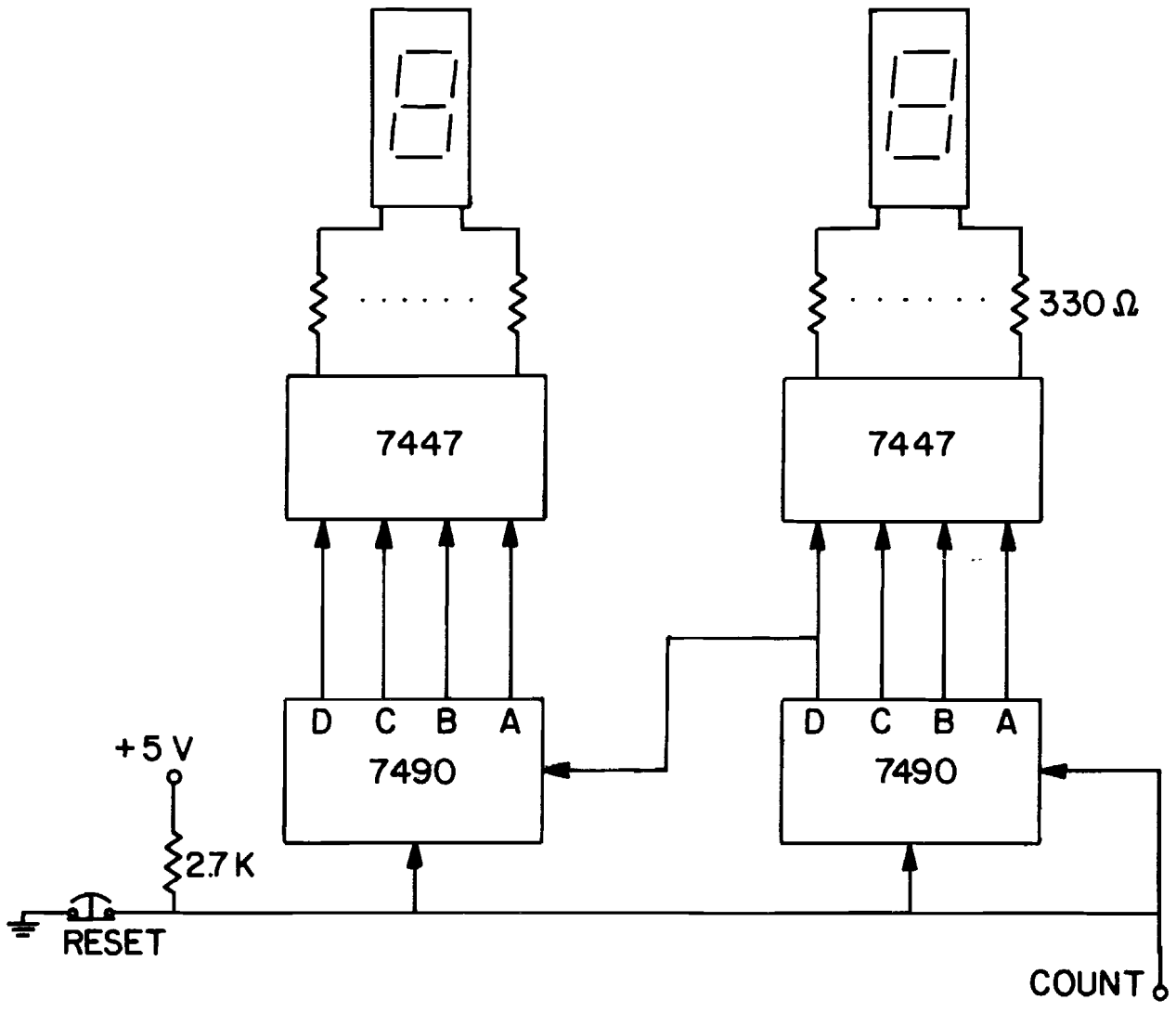

FIG. D-5 AUTOMATED TESTER: COUNTER

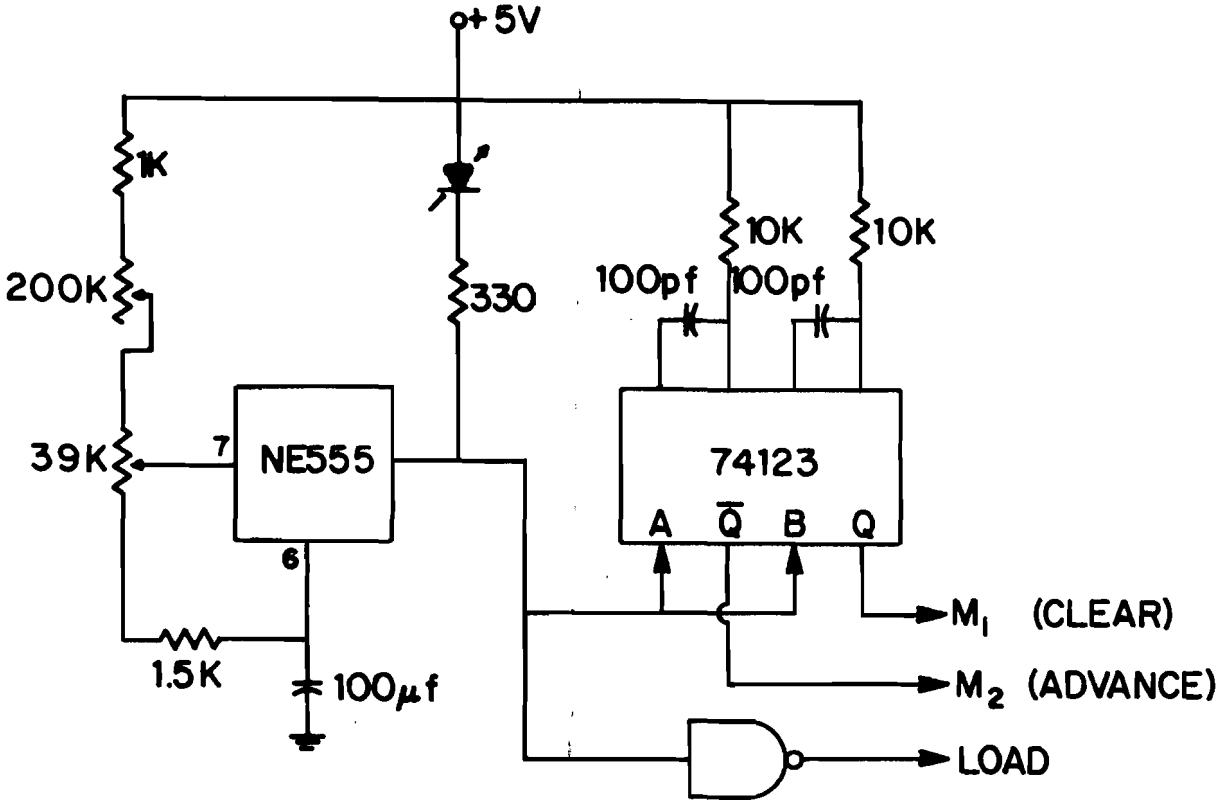

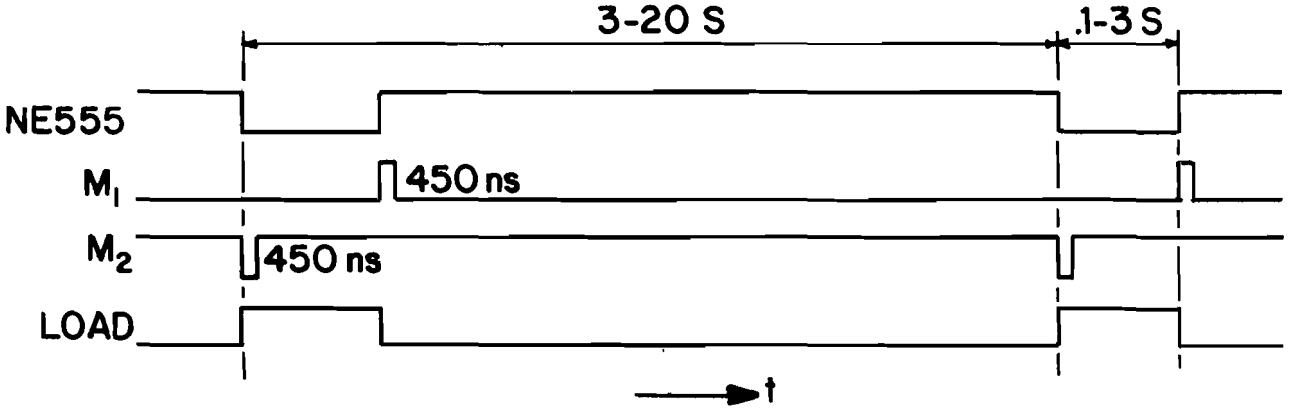

FIG. D-6 AUTOMATED TESTER: CLOCK

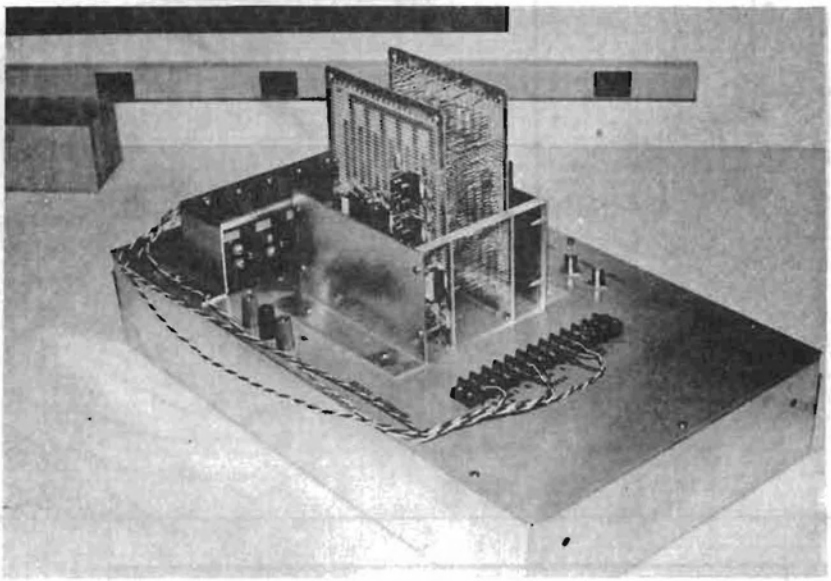

FIG. D-7 THE AUTOMATIC SIGNALING TESTER
NEAR COMPLETION

REFERENCES

[1] Bennison, E., Ghazi, A. J., and Ferland, P. "Lightning Surges in Open Wires, Coaxial and Paired Cables," IEEE Transactions on Communications, COM-21, pp. 1136-1143, 1973.

[2] Chen, C. L. "FAA Lightning Protection Study: Lightning Protection Devices," FAA Technical Report No. FAA-RD-74-104, April 1974.

[3] Inductive Interference Engineering Guide, Bell Laboratories, March 1974.

[4] Schelkunoff, S. A. "The Electromagnetic Theory of Coaxial Transmission Lines and Cylindrical Shields," Bell System Technical Journal 13, p. 532, 1934.

[5] Miller, D. B. and Thompson, H. W., Jr., "Short-pulse Switches for Airborne High-Power Supplies," Report No. F33615-72-C-2079, 1974.

[6] Cosel, R. M., Revay, A. W., Jr., and Stahmann, J. "FAA Lightning Protection Study: Lightning Simulation Tests of Communication Cables," Report No. FAA-RD-74-71, January 1974.

[7] Breem, C. and Dahlbom, C. A. "Signaling Systems for Control of Telephone Systems," BSTJ XXXIX, No. 6, pp. 1381-1444, November 1960.

[8] Burr-Brown, Inc., Operational Amplifiers: Design and Applications, pp. 383-384.

[9] Huddleston, G. K., Nordgard, J. D., and Larson, R. W. "FAA Lightning Protection Study: Lightning Protection Requirements for AN/GRN-27(V) Instrument Landing System," FAA Technical Report No. FAA-RD-74-131, April 1974.

[10] Laidig, J. F. "New Equipment and Arrangements for Protecting Communication Cables Serving Power Stations," NEC, Vol. 28, pp. 102ff, October 1973.