COPY 1

Report No: FAA-RD-76-42

RADIO REMOTE CONTROL SYSTEM FOR VISUAL NAVIGATIONAL AIDS

Robert W. Harralson

NAFEC
LIBRARY
NOV 11 '76

July 1976
Final Report

Document is available to the public through the National Technical Information Service, Springfield, Virginia 22161.

Prepared for

U.S. DEPARTMENT OF TRANSPORTATION
FEDERAL AVIATION ADMINISTRATION
Systems Research & Development Service
Washington, D.C. 20590

NOTICE

This document is disseminated under the sponsorship of the Department of Transportation in the interest of information exchange. The United States Government assumes no liability for its contents or use thereof.

Technical Report Documentation Page

1. Report No.	2. Government Accession No.	3. Recipient's Catalog No.
FAA-RD-76-42		

4. Title and Subtitle	5. Report Date
Radio Remote Control System for Airport Visual Navigational Aids	July 1976
	6. Performing Organization Code
7. Author(s) Robert W. Harralson	8. Performing Organization Report No. DOT-FA74WA-3433
9. Performing Organization Name and Address ASE, Inc. 5090 Central Highway Pennsauken, New Jersey 08109	10. Work Unit No. (TRAIS)
	11. Contract or Grant No. DOT-FA74WA-3433
12. Sponsoring Agency Name and Address U.S. Department of Transportation Federal Aviation Administration Systems Research and Development Service Washington, D.C., 20590	13. Type of Report and Period Covered Final Report
	14. Sponsoring Agency Code

15. Supplementary Notes

16. Abstract

This is an evaluation unit to prove the feasibility and reliability of radio remote control for airport visual NAVAIDS. Reliability includes radio link dependability, equipment dependability, and message security.

The radio link is assured by directional antennas and large power margin; the equipment is designed to MIL Standards, and the message is triple encoded. The half duplex system is so formatted that only one station can transmit or receive at any one time. This combination insures that the messages will be successfully communicated without inter-station interference, in the noisy EMI environment of the airport, and through unfavorable conditions of terrain and weather.

Modular construction permits growth to 10 remote stations with 12 discrete functions per station.

17. Key Words	18. Distribution Statement
Radio Remote Control Reliable Telemetry High Immunity to EMI Noise Visual Aids Airport Lighting	Document is available to the public through the National Technical Information Service, Springfield, Virginia 22151

19. Security Classif. (of this report)	20. Security Classif. (of this page)	21. No. of Pages	22. Price
Unclassified	Unclassified	115	

Form DOT F 1700.7 (8-72) Reproduction of completed page authorized

METRIC CONVERSION FACTORS

Approximate Conversions to Metric Measures

Symbol	When You Know	Multiply by	To Find	Symbol
		LENGTH		
in	inches	*2.5	centimeters	cm
ft	feet	30	centimeters	cm
yd	yards	0.9	meters	m
mi	miles	1.6	kilometers	km
		AREA		
in^2	square inches	6.5	square centimeters	cm^2
ft^2	square feet	0.09	square meters	m^2
yd^2	square yards	0.8	square meters	m^2
mi^2	square miles	2.6	square kilometers	km^2
	acres	0.4	hectares	ha
		MASS (weight)		
oz	ounces	28	grams	g
lb	pounds	0.45	kilograms	kg
	short tons (2000 lb)	0.9	tonnes	t
		VOLUME		
tsp	teaspoons	5	milliliters	ml
Tbsp	tablespoons	15	milliliters	ml
fl oz	fluid ounces	30	milliliters	ml
c	cups	0.24	liters	l
pt	pints	0.47	liters	l
qt	quarts	0.95	liters	l
gal	gallons	3.8	liters	l
ft^3	cubic feet	0.03	cubic meters	m^3
yd^3	cubic yards	0.76	cubic meters	m^3
		TEMPERATURE (exact)		
°F	Fahrenheit temperature	5/9 (after subtracting 32)	Celsius temperature	°C

*1 in = 2.54 (exactly). For other exact conversions and more detailed tables, see NBS Misc. Publ. 286, Units of Weights and Measures, Price $2.25, SD Catalog No. C13.10:286.

Approximate Conversions from Metric Measures

Symbol	When You Know	Multiply by	To Find	Symbol
		LENGTH		
mm	millimeters	0.04	inches	in
cm	centimeters	0.4	inches	in
m	meters	3.3	feet	ft
m	meters	1.1	yards	yd
km	kilometers	0.6	miles	mi
		AREA		
cm^2	square centimeters	0.16	square inches	in^2
m^2	square meters	1.2	square yards	yd^2
km^2	square kilometers	0.4	square miles	mi^2
ha	hectares (10,000 m^2)	2.5	acres	
		MASS (weight)		
g	grams	0.035	ounces	oz
kg	kilograms	2.2	pounds	lb
t	tonnes (1000 kg)	1.1	short tons	
		VOLUME		
ml	milliliters	0.03	fluid ounces	fl oz
l	liters	2.1	pints	pt
l	liters	1.06	quarts	qt
l	liters	0.26	gallons	gal
m^3	cubic meters	35	cubic feet	ft^3
m^3	cubic meters	1.3	cubic yards	yd^3
		TEMPERATURE (exact)		
°C	Celsius temperature	9/5 (then add 32)	Fahrenheit temperature	°F

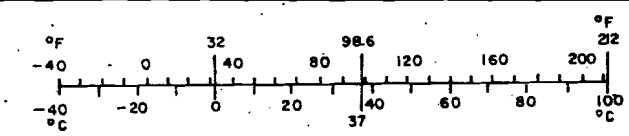

PREFACE

There is a requirement for a radio control link system which can be used to control and provide status information on airport approach and landing aids, including the approach light systems, runway and taxiway lighting, and instrument landing systems. The new control system must be lower in cost than a buried wire system and must be equivalent or better in reliability.

ASE, Inc., under contract to the FAA, has developed a control unit and installed it at NAFEC, Pomona, New Jersey for evaluation. The purpose of this demonstration is to establish that the ASE developed system operates satisfactorily and with sufficient reliability so that the economies of Radio Remote Control may be realized.

ASE, Inc. wishes to express its appreciation to the Visual Aids Section of the Federal Aviation Administration for the guidance and assistance which helped to bring this effort to a successful conclusion. The efforts of Mr. John Goon, Program Manager in the early phases; Mr. J. P. McVicker, Program Manager in the latter phase; and Mr. Walter C. Fisher, Section Chief, are mentioned. Mr. Leon Reamer of NAFEC provided valuable guidance in general and Mr. Bret Castle provided help in the system installation and evaluation at the National Aviation Facilities Experimental Center (NAFEC) at Pomona, New Jersey.

The technical review and advice given by Mr. Carlo Yulo, Assistant Chief of the Navigation Division, was helpful.

July 1976

TABLE OF CONTENTS

Section		Page No.
1.0	INTRODUCTION	1-1
1.1	Background	1-1
1.2	Contract Requirements	1-1
1.3	Report Organization	1-2
2.0	SUMMARY	2-1
2.1	General	2-1
2.2	Design and Development Phase	2-1
2.3	Field Evaluation System	2-2
2.4	Conclusions and Recommendations	2-2
3.0	SYSTEM RATIONALE	3-1
3.1	System Configuration	3-1
3.2	System Considerations	3-1
3.3	Radio Link Considerations	3-7
3.3.1	Transmitter	3-7
3.3.2	Receiver	3-8
3.3.3	Antennas	3-9
3.4	Digital Processor Considerations	3-10
3.4.1	Data Input and Display	3-10
3.4.2	Transmit/Receive Control	3-11
3.4.3	Noise/Immunity	3-14
3.4.4	Noise Immunity Tests	3-15
4.0	DESCRIPTION OF EQUIPMENT	4-1
4.1	Physical Description	4-1
4.1.1	Central Control Station Set	4-1
4.1.2	Remote Control Station Set	4-3
4.2	Digital Processor	4-3
4.3	Transceiver	4-4
4.3.1	Transmitter Modifications	4-4
4.3.2	Receiver Modifications	4-6
4.4	Control and Display Unit - Central	4-6
4.5	Remote Display Units	4-9
4.6	Antennas	4-9
4.7	Power Supplies	4-9
4.8	Electromagnetic Interference Control	4-13

TABLE OF CONTENTS
(Continued)

Section		Page No.
5.0	SYSTEM OPERATION	5-1
5.1	Basic Operation	5-1
5.2	Digital Processor	5-1
5.2.1	Message Flow	5-1
5.2.2	Timing and Message Control Signals	5-3
5.2.3	Message Security	5-4
5.3	Control and Alarm Sequence	5-5
6.0	CONCLUSIONS AND RECOMMENDATIONS	6-1
6.1	Conclusions	6-1
6.2	Recommendations	6-2
6.2.1	MIL Spec Parts	6-2
6.2.2	FM Frequency Drift	6-2
6.2.3	Control Interface with NAVAIDS	6-3
Appendix A	FMECA Analysis	

LIST OF ILLUSTRATIONS

Figure No.		Page No.
3-1	System Evaluation Unit Interconnection Diagram	3-2
3-2	Basic System Block Diagram	3-3
3-3	Attenuation Chart	3-5
3-4	System Timing Diagram	3-12
3-5	Message Flow Diagram	3-13
4-1	"E" Box Interconnection Diagram	4-2
4-2	Transmitter Modifications	4-5
4-3	Receiver Modifications	4-7
4-4	Central Control and Display Unit (A5)	4-8
4-5	Remote Indicator Units (A2A6 and A3A7)	4-10
4-6	Directional Antenna	4-11
4-7	Antenna Pattern	4-12
4-8	Power Splitter Schematic	4-13
4-9	Power Supply Configuration	4-15
6-1	Central Control and Display	6-5
Drawing 5D022	Command and Status (Board 3/4) Logic Diagram and Assembly	
Drawing 5D023	Channel Select and Data Control (Board 2) Logic Diagram and Assembly	
Drawing 5D024	Bit and Frame Sync Timing (Board 1) Logic Diagram and Assembly	
Attachment	Transceiver Instruction and Service Manual	

GLOSSARY OF TERMS

1. ALARM: A visual or audible indication of faulty operation, requiring operator attention.

2. BANDWIDTH: The total number of Hz between the -3dB points of the response-vs-frequency characteristic of a communication channel.

3. BIT, BINARY BIT: The elementary unit of information consisting of the two stable states: High-Low. In this equipment High-Low = 1, Low-High = 0.

4. BIT RATE: The frequence at which bits are transmitted. In this equipment, bit rate = 1000 per second.

5. BIT SYNC WORD: See under FRAME (14).

6. CENTRAL: Refers to the master unit which generates the master timing and synchronization signals, accepts manually programmed inputs, and delivers Status and Fault signals. It is located in an attended area.

7. CLOCK, SYSTEM: The primary source of synchronizing or referencing signals. In this equipment the system clock frequency = 1.MHz.

8. CODING: The process of converting information into bits.

9. COMMAND: A unit of information.

10. CONTROL WORD: The block of signals on a group of 12 pins: pins 1 through 12 or pins 21 through 32. Each group of 12 must be transmitted contiguously by the processor.

11. CONTROL FUNCTION: Any one of the signals in a control word.

12. FMECA: Failure Mode, Effect and Criticality Analysis. This, together with parts list, failure rates of each component, and computation of Mean Time Between Failure (MTBF) is part of the supplier's responsibility.

13. FREQUENCY SHIFT KEYING (FSK): A method of modulating the radio frequency carrier in which a digital High is represented by one frequency and a digital Low by another.

GLOSSARY OF TERMS
(Continued)

14. FRAME: One transmission period from sync to sync.

BIT SYNC WORD: The first 32 bits transmitted in each Frame (all ones).

FRAME SYNC WORD: The 9 bit and 8 bit words, immediately succeeding the bit sync word, which initiate counting for location of transmit and receive time slots.

15. HALF-DUPLEX: The system of data transmission and reception in which information passes in both directions over a single communication channel, being kept separate by a timing and gating function.

16. MANCHESTER SPLIT PHASE CODE: An encoding system which distinguishes between ones and zeros by whether they are in phase or 180° out of phase with a reference. See example below.

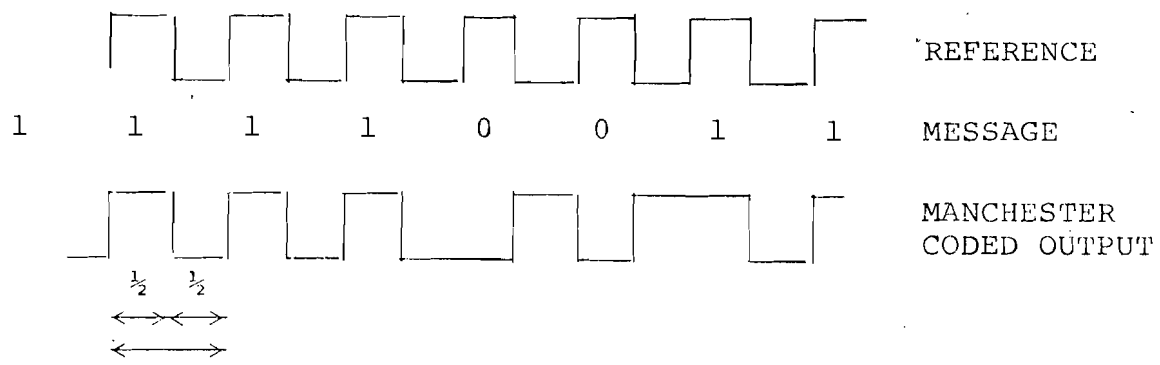

1 bit period = 1 millisecond

17. MESSAGE: A group of encoded digits that represent a complete piece of information.

18. REMOTE, REMOTE STATION: One of the stations being controlled by the Central Station.

19. REMOTE PROCESSOR: The processor in a remote station.

20. REDUNDANCY: The duplication of information to reduce probability of error. In this system, two forms of redundancy are used: the doubling of bits in the data transmission, and the message repeat of three times with majority rule detection (redundancy not used in sync period).

GLOSSARY OF TERMS
(Continued)

21. REMOTE SYNCHRONIZATION: (BIT SYNC) Phase locking of the 1KHz timing wave at a remote station to the timing wave of the Central Station. 15 milliseconds of time is allowed for this operation.

    REMOTE SYNCHRONIZATION: (FRAME SYNC) Timing of the start of the remote counter to insure proper transmit and receive lock-in among the several stations.

22. SCHMIDT TRIGGER: A circuit having two stable states, (1,0) with a dead zone between them to prevent erratic triggering on noisy signals.

23. STATUS: The position of the controlled switches at a remote station. These switches generate the same word as the command at the Central Station, and this word is sent back to the Central Station during the remote station's assigned transmit time slot.

24. SYNC, SYNCHRONIZATION: See (21) above.

Section 1

Introduction

1.1 Background

With the current expansion of airport facilities and new equipment installation, the need for additional control wiring between the airport tower and the control site has been increasing. The current method of utilizing underground cables for control of airport visual NAVAIDS has presented economic and practical problems. The problem is amplified where new cable routes are required across existing runways and taxiways. The installation and maintenance cost of these cables can be considerable plus inconvenience to the airport community due to construction and runway and taxiway closures.

An alternate approach for transmitting control signals is through a radio remote control system. This system would have to operate in the electronic noise environment of an airport with a reliability approaching that of a wire system, provide flexibility for control of numerous remote control stations, and cost less than an equivalent wire system. The FAA awarded Contract No. DOT-FA74WA-3343 to ASE, Inc. to develop such a system and install it at the FAA NAFEC facility at Pomona, New Jersey for FAA evaluation.

1.2 Contract Requirements

The contract provides for the design, development, test and installation of a radio control link system to control and display status information of remote control stations. The system is to be capable of controlling up to ten remote stations and at least twelve discrete functions at each station. However, the evaluation unit to be installed at NAFEC is to consist of a central control station and two remote control

stations.

The principal design requirements of the system are as follows:

1. Frequency modulated transmission in the 162-174 MHz band.
2. Operation of equipment up to five miles from the central control station.
3. Operation in an airport environment containing spurious electromagnetic radiation (internal and external) and lightning.
4. Security methods shall be incorporated to assure integrity of the signal transmission.
5. The system shall include monitoring to display the status of the controls at the remote stations.
6. The system shall be designed for reliability which shall be demonstrated by a FMECA analysis.
7. Operation from a 120V AC power source.
8. Provide a battery emergency power supply to maintain normal system operation during a power failure for up to three hours.
9. Operational temperature range - $10^{\circ}C$ to $+50^{\circ}C$.
10. Operational humidity range - 5% to 90%.

1.3 Report Organization

In accordance with contract requirements, this final report describes the accomplishments and status at the completion of the contract. Section 2 summarizes this report. Section 3 discusses the rationale of the system design. Section 4 provides physical and functional descriptions of the system and its elements. Section 5 contains operational details to aid in trouble shooting. Section 6 provides conclusions and recommendations for further work. Appendix A contains the FMECA analysis.

Section 2

Summary

2.1 General

After fifteen months of design, development, analysis, test and fabrication, ASE, Inc. installed the Radio Link Control evaluation system at NAFEC in November 1975. The installation consists of a central control station and two remote control stations (one being approximately five miles from the central station). The system was operated continuously for approximately four weeks with service interrupted only for the normal de-bugging which accompanies new equipment newly installed in the field. One remote unit was then moved to an environmental chamber where it was subjected to temperature and humidity tests by the FAA. The results of these tests will be published by the FAA. The evaluation system has been accepted by the FAA as a contract deliverable equipment and will be subjected to further evaluation tests by the FAA.

2.2 Design and Development Phase

The primary design objectives were to design an operational system with high reliability and high immunity to EMI as found at airport environment. This was achieved and demonstrated in a laboratory breadboard model of the system. This model was subjected to extensive testing and evaluation in the laboratory to assure a sound system approach. The testing included:

a. parameter variation to determine stability margin,
b. examination of component stress ratios for reliability,
c. injection of a variety of noise signals to evaluate the noise immunity of the system.

These tests showed that the system is immune to random noise.

A FMECA analysis was performed which indicated a MTBF of 2340 hours if a conservative approach is taken or 2950 hours if a more optimistic approach is used. The FMECA analysis is contained in Appendix A of this report.

2.3 Field Evaluation System

The more rugged field evaluation system was designed and built, incorporating the modifications and improvements made during the breadboard test and evaluation. To improve the resistance to airport vibration environment, stronger and stiffer printed circuit boards were used, mechanical retainers for the boards were added, and the edge connectors were replaced by more reliable pin connectors.

The system consists of a central control station and two remote control stations. High Reliability and MIL specification components were used in these units wherever possible to enhance reliability. The units were thoroughly tested and debugged in the laboratory including temperature testing. The system was then installed at NAFEC; the central station in Building 161, the remote stations in Building 226 and at the outer marker.

2.4 Conclusions and Recommendations

To date, the Radio Link System has performed successfully in the field installation thus demonstrating the feasibility of the design and the system approach.

Should the FAA decide to pursue the system development further, the following additional effort is recommended for improvement of the system and its capability for controlling airport NAVAIDS.

1. The frequency drift problem of the transmitter at the temperature extremes should be eliminated by circuit changes, principally automatic frequency control (AFC).
2. Appropriate interface units for operating airport visual aids and other NAVAIDS, such as ILS, MLS, etc., should be developed.

3. Use of MIL SPEC parts in the transceiver to increase transmission reliability.
4. Investigate the applicability of the new generation of transceivers developed by GE and Motorola to the transceiver problem.

Section 3

System Rationale

3.1 System Configuration

The radio control link system consists essentially of a central control station set and one or more remote control station sets. See Figure 3-1. Each set contains an FM transceiver and antenna(s) which provide the radio relay of the control and monitor signals, a digital processor which develops a coded series of pulses to provide EMI resistant control signals, and a power supply for the required power. A battery permits operation for three hours after loss of A. C. power.

3.2 System Considerations

Figure 3-2 is a block diagram of a representative central and remote pair, both capable of transmission and reception. The problem is to keep these two locations in communication with each other without external interference and with cable reliability.

The system features a highly reliable radio link, and a triple encoded message for security. Reliability of radio communication is promoted by using considerable power margin and a narrow channel which is permitted by the low required data rate. The logical system for combining these parameters is half duplex time division multiplex.

Considering system power, charts of attenuation vs distance for free space transmission indicate that a loss of about 97 dB will be incurred in five miles. Assuming a 3dB noise figure for the receiver gives a total loss of 100 dB. The receiver threshold for 3dB N.F. and 15K Hz bandwidth is -129dB, requiring a transmitter power of -29dBM for unity S/N. Therefore, one watt of transmitter power would give a 60dB margin

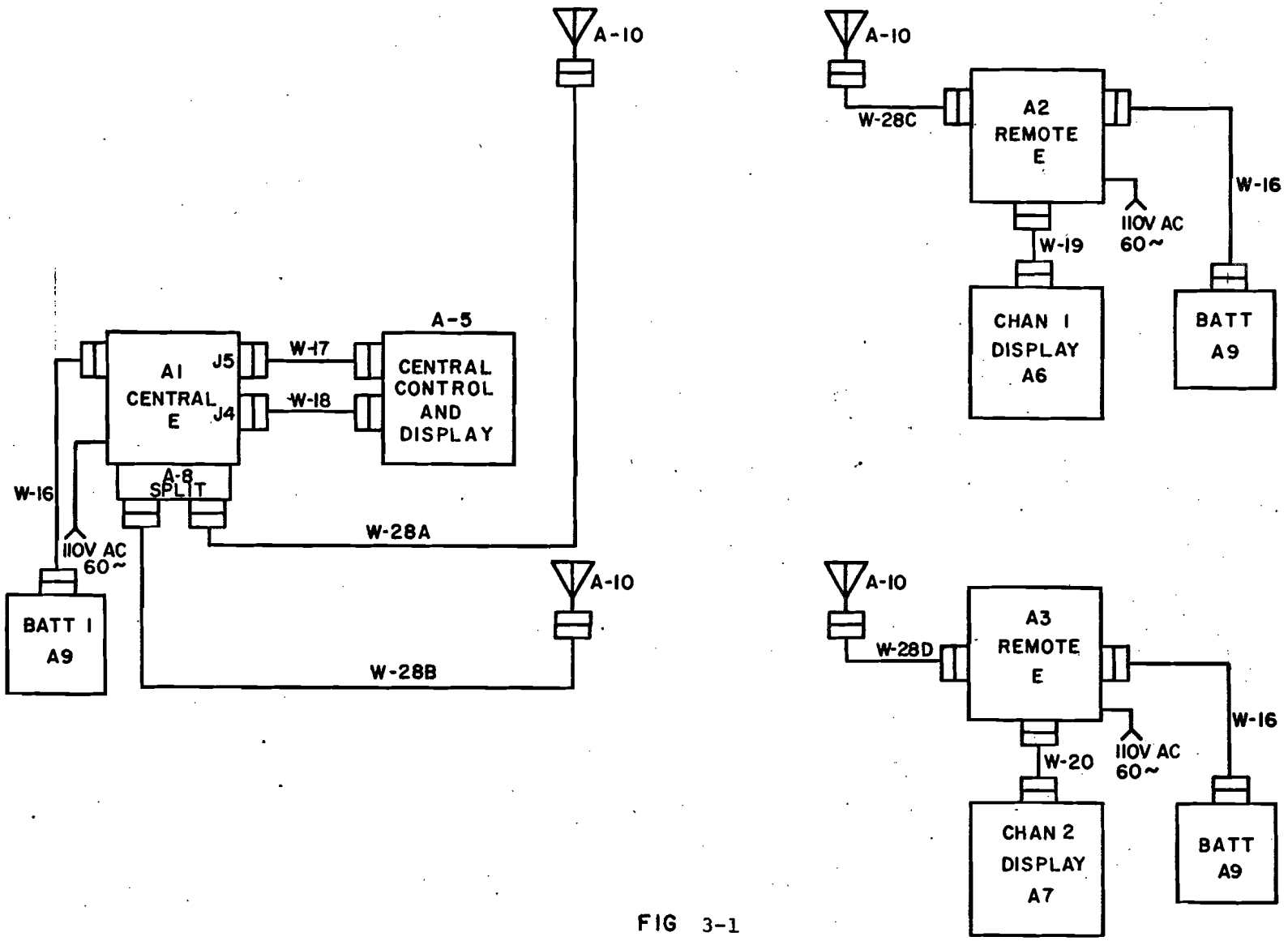

FIG 3-1

SYSTEM INTERCONNECTION DIAGRAM

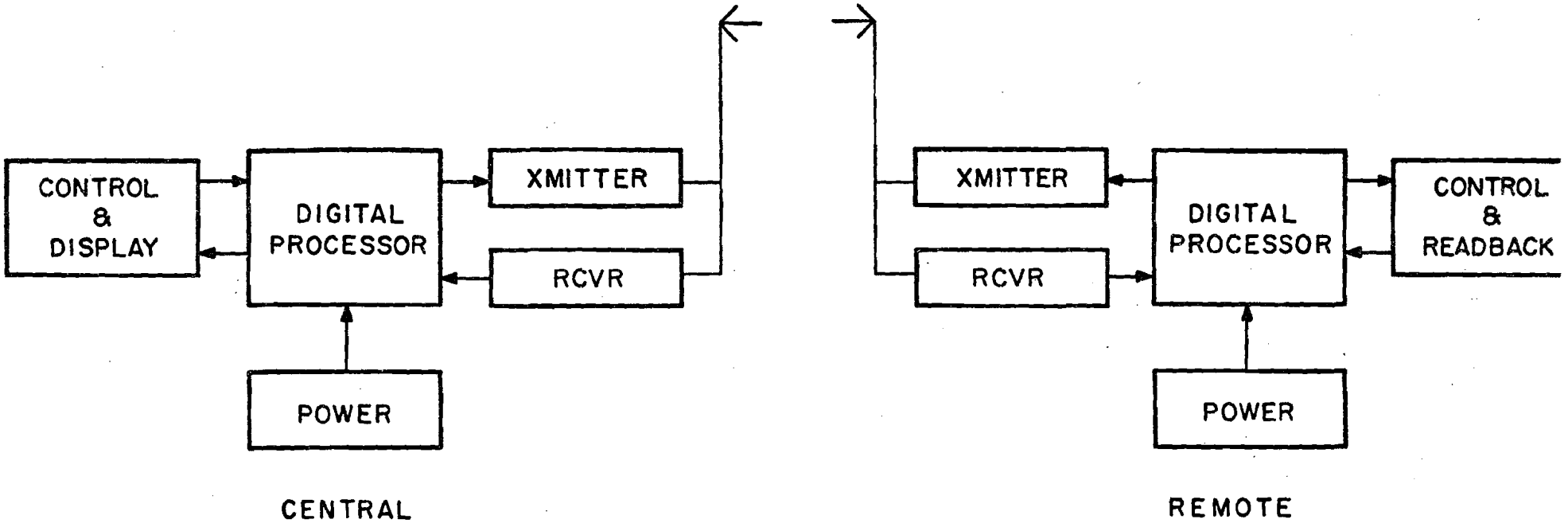

BASIC SYSTEM BLOCK DIAGRAM
RADIO REMOTE CONTROL

FIGURE 3-2

for overcoming transmission difficulties. The fact that each remote station will be communicating with only the master station encourages the use of a directional antenna providing additional gain. This provides enough margin to satisfy any reasonable requirement. Additional safety margin accrues from the fact that most commercial telecommunication transmitters deliver 3 to 20 watts of power, enhancing confidence in the radio signal reliability.

The more common causes of signal attenuation are cancellation by interference from reflected waves, scattering by obstacles, such as buildings, in the transmission path, and absorption by lossy objects such as trees. Null depths of 40dB or more due to cancellation have been observed, but these can usually be considerably ameliorated by antenna relocation or some other tactic. Scattering is a function of the size, shape, material, location and number of obstructions, but does not generally prevent communication. Absorption depends on the loss characteristics and depth of the absorbing material, which varies with weather conditions and with the season. The attenuation to be expected can be determined by inspection of the transmission path and corrective action may be taken if it appears that deep nulls or excessive losses are to be expected.

Representative data on the loss to be expected from trees is shown in Fig. 3-3, reproduced from IEEE Transactions on Antennas and Propagation, July 1963. It shows that for average MID-LATITUDE WOODS IN LEAF, the attenuation to be expected at 166 MHz is 100dB per mile, and for jungle, 1000dB per mile, effectively precluding radio communication over any appreciable distance. However, data from other investigators shows that the loss in woods or jungle is not exponential, as indicated above, but reaches a limit of 20 to 40dB from the free space value. (IEEE Transactions on Antennas and Propagation, May 1966 p. 386.)

Neither investigator gave information on the height of antennas relative to tree height. Although the second investigator indicated that the <u>added</u> attenuation due to trees was independent of antenna height, this does not seem reasonable, and

HF and VHF Radio Wave Attenuation Through Jungle and Woods*

Experimental information on loss through woods and jungles has been made available by a number of investigators [1]–[4]. However, analytic substantiation has been lacking. In this communication, a simple extension of the theory developed by Stratton [5] and Wheeler [6] has been applied to HF and VHF radio wave attenuation in the dense jungles.

The theory for the loss in the foliage is essentially the same as that for loss in any medium such as sea water where the field is attenuated exponentially with distance as follows:

Received Field: $E = E_0 e^{-d/\delta}$, (1)

Skin depth: $\delta = \frac{1}{2\pi}\sqrt{\frac{\lambda}{30\sigma}}$ meters, (2)

Medium Conductivity: σ = Mhos/M,

Loss in db: $\alpha = 20 \log_{10} e^{-d/\delta}$, (3)

Note: When $d = \delta$, $\alpha = 8.68$ db.

Table I lists typical skin depths for various lossy media for 3 and 30 Mc.

TABLE I

Medium	Conductivity	Skin Depth at 3Mc	Skin Depth at 30 Mc
	Mhos/M	*Meters*	*Meters*
Sea Water	4	0.15	0.05
Wet Soil (CCIR) [7]	3×10^{-2}	1.6	0.5
Fertile Soil (CCIR)	1×10^{-2}	2.9	0.9
Dry Soil (CCIR)	3×10^{-3}	5.1	1.6
Very Dry Soil (CCIR)	1×10^{-3}	9.1	2.9
Dry Soil Minimum (Wheeler)	1×10^{-4}	29	9.2
Dry Soil Minimum (Stratton)	1×10^{-5}	91	29
Dense Jungle Foliage	1×10^{-5}	91	29
Mid-Latitude Woods	3×10^{-8}	1600	500

The experimental information on the attenuation of ground wave field strength vs distance at various frequencies for vertically polarized waves through the dense jungles of New Guinea, is derived from [4] and from page 33 of [3]. Fig. 1 shows this information replotted with db per 0.1 mile as a function of frequency together with the new curve of the analytical results. The loss due to mid-latitude woods in leaf also plotted on Fig. 1 shows that a three-fold order of magnitude difference exists in relative conductivity between dense jungle and ordinary mid-latitude woods in leaf. Obviously, one now sees the necessity for specific identification and classification of the physical characteristics of foliage before reasonably close estimates of attenuation are feasible. On the other hand, Fig. 1 is indicative of the upper and lower loss limits and Table I, of the spread of typical physical constants.

SEYMOUR KREVSKY
RCA Surface Communications
Systems Labs.
New York, N. Y.

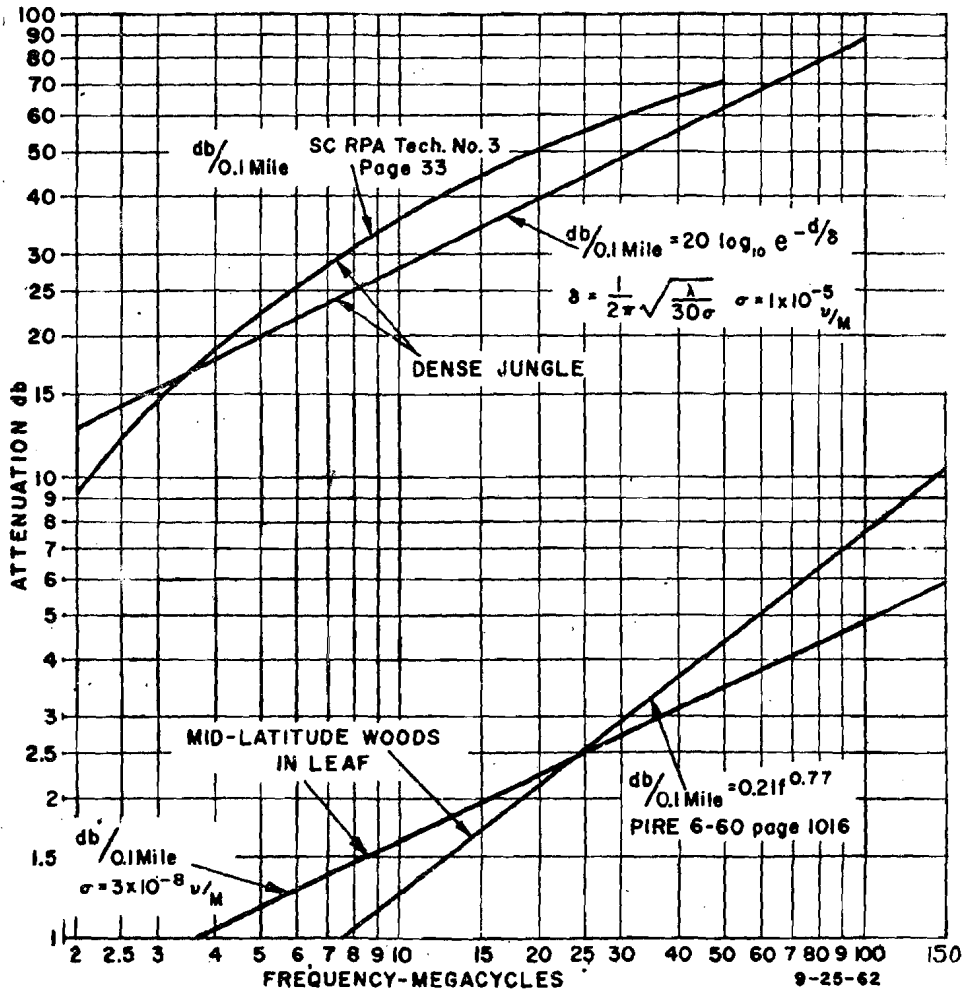

Fig. 1

* Received February 11, 1963. The work reported here was supported by the Communication Department of the U. S. Army Electronic Research and Development Laboratory under Contract No. DA 36-039-AMC-00011(E).

REFERENCES

[1] H. T. Head, "The influence of trees on TV field strengths at UHF," PROC. IRE, vol. 48, pp. 1016–1020; June, 1960.

[2] B. Trevor, "UHF propagation through woods and underbrush," *RCA Rev.*, vol. 5, pp. 97–100; July, 1940.

[3] "Ground Wave Field Intensities," Singal Corps radio Propagation Agency, Fort Monmouth, N. J., Tech. Rept. No. 3, pp. 9 and 33; revised June, 1949.

[4] "Radio Propagation Through the New Guinea Rain Forest," New Zealand Department of Scientific and Industrial Research (DSIR), Operational Research Section, Melbourne, Australia, Rept. No. 8; 1944.

[5] J. A. Stratton, "Electromagnetic Theory," McGraw-Hill Book Co., Inc., New York, N. Y., pp. 297–304, 344, and 345; 1941.

[6] H. A. Wheeler, "Universal skin effect chart for conducting materials," *Electronics*, vol. 25, pp. 152–154, November, 1952; "Fundamental limitations of a small VLF antenna for submarines," IRE TRANS. ON ANTENNAS AND PROPAGATION, vol. AP-6, pp. 123–125; January, 1958.

[7] "Ground Wave Propagation Curves below 10 MC," CCIR, Los Angeles, Calif., recommendation no. 307; 1959.

FIGURE 3-3 ATTENUATION CHART

it may be that the variation (20 to 40dB) is in part a result of antenna height.

The logical explanation of the referenced data is that when the wave is launched, the ground wave is rapidly absorbed, as per the first reference, but the sky wave diffracts through and over the trees, producing an above-the-trees wave, attenuated about 20dB. Because the treetops are a dissipative medium, the lower part of the sky wave will travel more slowly than the free-space velocity and the wave will hug the treetops and continually diffract downward into the trees with a loss of approximately 20dB according to the measured data in the second reference. If both antennas are located in wooded areas, or in built-up areas, the loss to be expected would be 40dB, on the average (see the second reference), with considerable variation depending on other factors which are not enumerated in the above studies, but probably include density of vegetation, size of diffracting objects, rain, wetness of the leaves, etc.

The assigned channel has a bandwidth of 6KHz. If we reserve ±1KHz for the combined drift of transmitter and receiver, the allowed modulation is ±2KHz. The desired data rate and the requirement for a half duplex system sets a modulation frequency of 1KHz, which, with the available bandwidth of 4KHz permits FM deviation ratio of two. The data rate referred to is based on human factors and is basically the amount of time the operator would not consider excessive to wait for a reply after throwing a switch. Since several seconds normally elapse after a pilot's verbal request before action by the controller, a few more seconds do not appear to represent an objectionable delay. In this system, the maximum time delay with 10 remote stations for transmit and readback is 1.5 seconds. With 2 remote stations, the time is 324 milliseconds.

Message security requires more than the standard encoding schemes because of the possible serious consequences of incorrect operation of lights or navigational aids. Accordingly, a triple

security system is used which rejects all messages that do not conform to the exact format of frame sync, message encoding, and timing.

The multiple transmission scheme used was in preference to error detection and correction codes which have about the same data rate per unit bandwidth, but require much greater circuit complexity. The requirement for continuous monitoring of the remote condition means that the message must be continually repeated, so it is efficient to also use this function as part of the message security technique.

System design is only as effective as permitted by equipment reliability, and to this end the most reliable devices and construction are used, and MIL spec parts invoked where possible. Thorough inspection and testing of all parts and subassemblies, as well as laboratory simulated system tests, helped insure dependability of field performance. The proposed system then is half duplex, narrow band and with high signal-to-noise margin to insure radio link reliability. A triple encoding scheme is used to preserve message security. High reliability parts and construction and thorough testing enhance system reliability.

3.3 Radio Link Considerations

3.3.1 Transmitter

To facilitate the evaluation unit, a commercially available transceiver is used. The transmitter has a nominal power output of 10 watts, but this is reduced to 3 watts by retuning the output matching network to increase the life and reliability. The transmit/receive switch and some filtering, which takes 50 milliseconds to operate, is replaced by electronic switching. Including transient settling time in the receiver, this circuit now operates in 2 milliseconds. Amplitude modulation sideband generation during switching is controlled by a time constant in the T/R switch that limits rate of rise and fall of voltage to the power amplifier stages.

The second transmitter modification is in the modulator. Since the digital input is a square wave, sideband generation must

be controlled by low pass filtering. The filter passes 500Hz and 1000Hz without attenuation, but drops sharply above 1.5KHz to prevent generation of sidebands above 2KHz. The modulation consists of 500Hz and 1000Hz square waves which have harmonics at 1500, 2500, 3000Hz and above, all of which are reduced by the filter to keep the radiated signal in the ±2KHz allowable bandwidth.

3.3.2 Receiver

The receiver input is on the same antenna as the transmitter output and therefore requires protection from excess voltage. This is done by inserting a quarter wave coax line between transmitter and receiver and placing diodes across the far end of the line. This gives a shorted quarter wave line during transmission and has no effect during reception. The receiver input is protected by limiting the voltage to 1 volt peak multiplied by the input transformer step up ratio, which gives less than the 10 volt peak allowable voltage on the input F.E.T. During transmission the shorted quarter wave line looks like an open circuit and has no effect on the transmitter.

The second receiver modification is filtering of the output, which has a useful signal bandwidth of only 4KHz in a receiver with an I.F. bandwidth of 15KHz. Therefore, to take care of the excess noise that will be present in low S/N conditions, a low pass filter is placed between the receiver output and the Schmidt trigger which is used to reconstitute the square wave for digital processing.

The reason for not narrowing the receiver bandwidth to 6 KHz is that all common I.F. filters used in communication receivers have non-linear phase shift, and since the I.F. contributes most of the system delay, carrier frequency variations would result in changes in system delay, having a deleterious effect on system phase lock. As it is, the I.F. section has reasonably linear time delay in the center half of its bandwidth and gives satisfactory results without special design or phase equalizers. The small price in S/N ratio paid for

this tolerance is of little consequence in view of the large signal margin provided.

Although operation at low S/N ratios was not part of the design philosophy, some effort was made to provide adequate performance in this region. In addition to the low pass filter on the discriminator output, an adjustable Schmidt trigger was used to reconstitute the output signal, and was set for best performance at levels where the signal was barely usable. The 36 character code word puts a first limit on the amount of noise that can be tolerated, and represents a penalty in S/N as a result of the security provisions of the encoding. The signal must be strong enough that all 36 consecutive characters are received without error, or the message will not be admitted. Lab tests indicate that a S/N of at least 6 to 10dB is required depending on other factors such as frequency drift. In this signal strength region, a small drop in signal, such as 2 or 3dB may therefore result in no reply from the remote, with consequent alarm at central even though the message may have been correctly transmitted and received. The uncertainties that exist in this signal region are therefore the reason for operation with a large S/N margin.

3.3.3 Antennas

An omni-directional antenna is not used at the central station because most airport locations will not provide a suitable location for an omni antenna, which should have minimum obstruction in the direction of each remote. This remote control system will not have priority over radar at such a location, and furthermore, it is unlikely that the controlled stations will have 360° orientation with respect to central, making an omni antenna wasteful of power and contributing unnecessarily to possible interference in directions where no remote station exists.

From these considerations, it seems better to study each location and to provide a system of directional antennas so that there will be optimum transmission conditions in each direction. The power to the antennas should be divided to suit the

requirements of remote stations at different distances in the various directions by either a power divider for a single transmitter, or, if long wire runs are involved, several transmitters.

The RF link introduces time delays due to the various filters which require equalization to permit use of a phase sensitive message encoding system (Manchester Split Phase). This equalization is accomplished in the digital processor, and is discussed under that item.

3.4 Digital Processor Considerations

The digital processor, which is the heart of the system, accepts commands in parallel form and transmits them in serial form. It accepts received data in serial form and displays it in parallel. It generates all the timing and sequencing signals required to perform all its functions. It encodes and decodes all the signals required for message security, alarms in case of trouble, and remembers the last message in case of signal interruption. It channels the messages so that the central stations control all the remote stations, but the remote stations cannot affect each other.

It corresponds to the compiler, memory and CPU of a computer. The loading switches "compile" the program and feed it to the first memory, which is stationary storage, and to the second, the recirculating memory used for transmission. These, and their counterparts in the receive section constitute the Random Access Memory (RAM). The code word generator is the Read Only Memory (ROM). Timing signals, error detector, voting, and message cycling are the internal computer program, and correspond to the central processor unit.

3.4.1 Data Input and Display

In airport control tower equipment, special requirements govern with regard to controls and displays. Most important to this equipment is that indicating lights must not be so bright as to distract the operators, but yet the condition of each control must be evident. In controls without readback, the position of a switch handle or knob is used to indicate the state desired, and no lights are used. With readback, as in this equipment,

the indicating lights are readily visible but are not objectionable. Whenever an operator can see the switch, he can see the indicating light.

The data represented by these switch positions are delivered to a register having parallel inputs which are loaded every transmission cycle, or upon operation of a load button, as desired. Once in memory, the data are encoded, formatted and serially transmitted every cycle. When received at the remote station, the commands are executed and an identical reply generated. When this reply is received at central it is displayed as a steady light. If the correct reply is not received, the light blinks, indicating a fault.

3.4.2 Transmit/Receive Control

All the timing signals originate from one source, a crystal oscillator, which is counted down to get phase locked signals for data transfer, modulation, message generation, and phase sensitive demodulation. See Figure 3-4.

Starting at 1MHz, the dividers generate the principal frequency of 1KHz the bit rate, and also 8KHz, 2KHz, 500Hz, 2Hz, and 0.1Hz which are used in various data processing operations.

The transmit sequence is as follows: First, from central, 1KHz reference phase is sent to phase lock the remote clocks. Then the frame sync, or code input is sent, and must be recognized by the remotes before their message timing sequence will start. Next, see Figure 3-5, the message is read out of the registers serially at 500Hz into the modulator which runs at 1KHz, encoding each unit of data into two bits. Each message is transmitted three times. After the last transmission of the last channel, the 1KHz clock is stopped for two milliseconds plus the time delay of the signal through two transmitter-receiver combinations to allow time for message processing and transient settling. Then, the receive cycle commences. Each unit of data is examined to verify that it is properly encoded, then stored in register. If a bit is improperly encoded, the entire register is dumped. After the three registers are filled, all are simultaneously read out

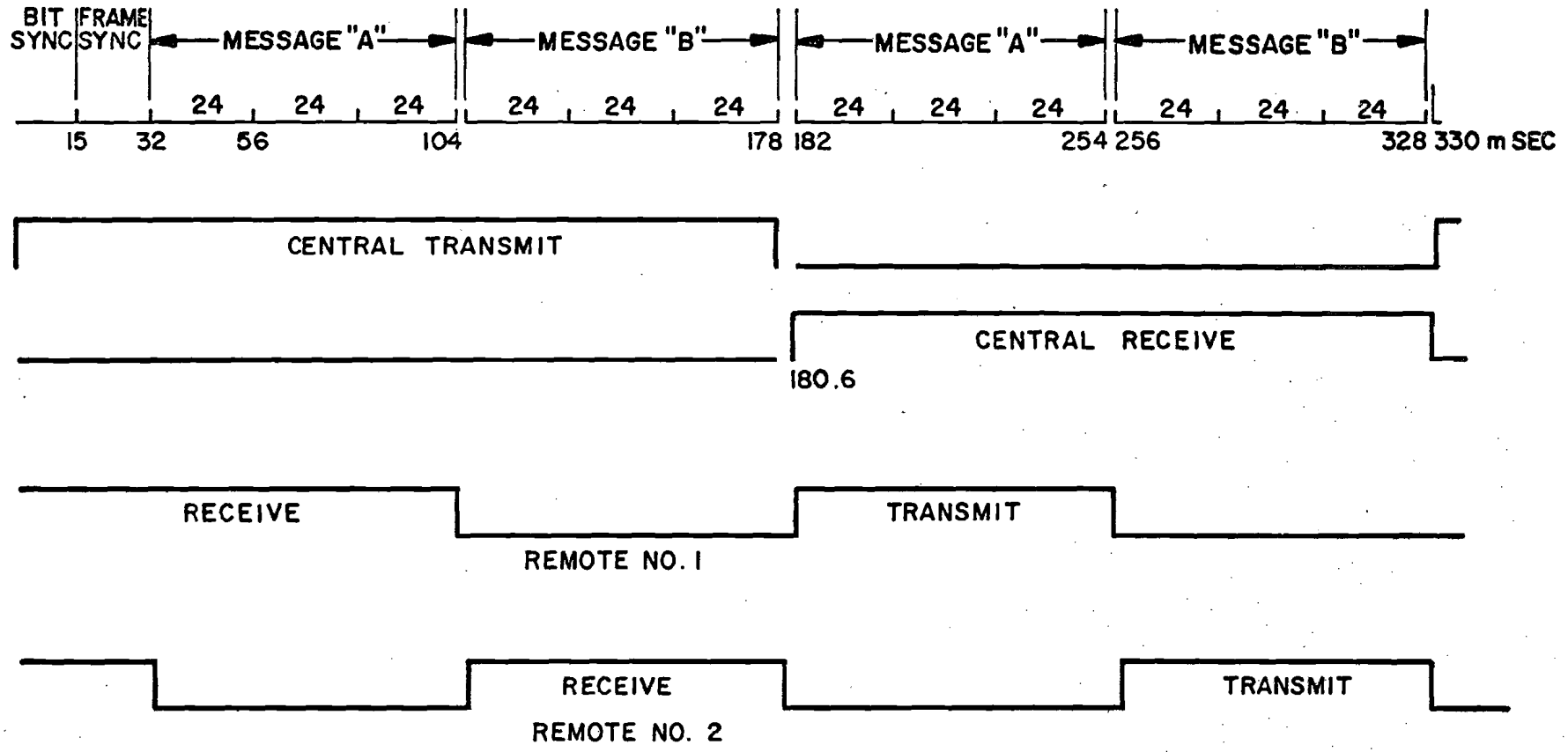

SYSTEM TIMING DIAGRAM

FIGURE 3-4

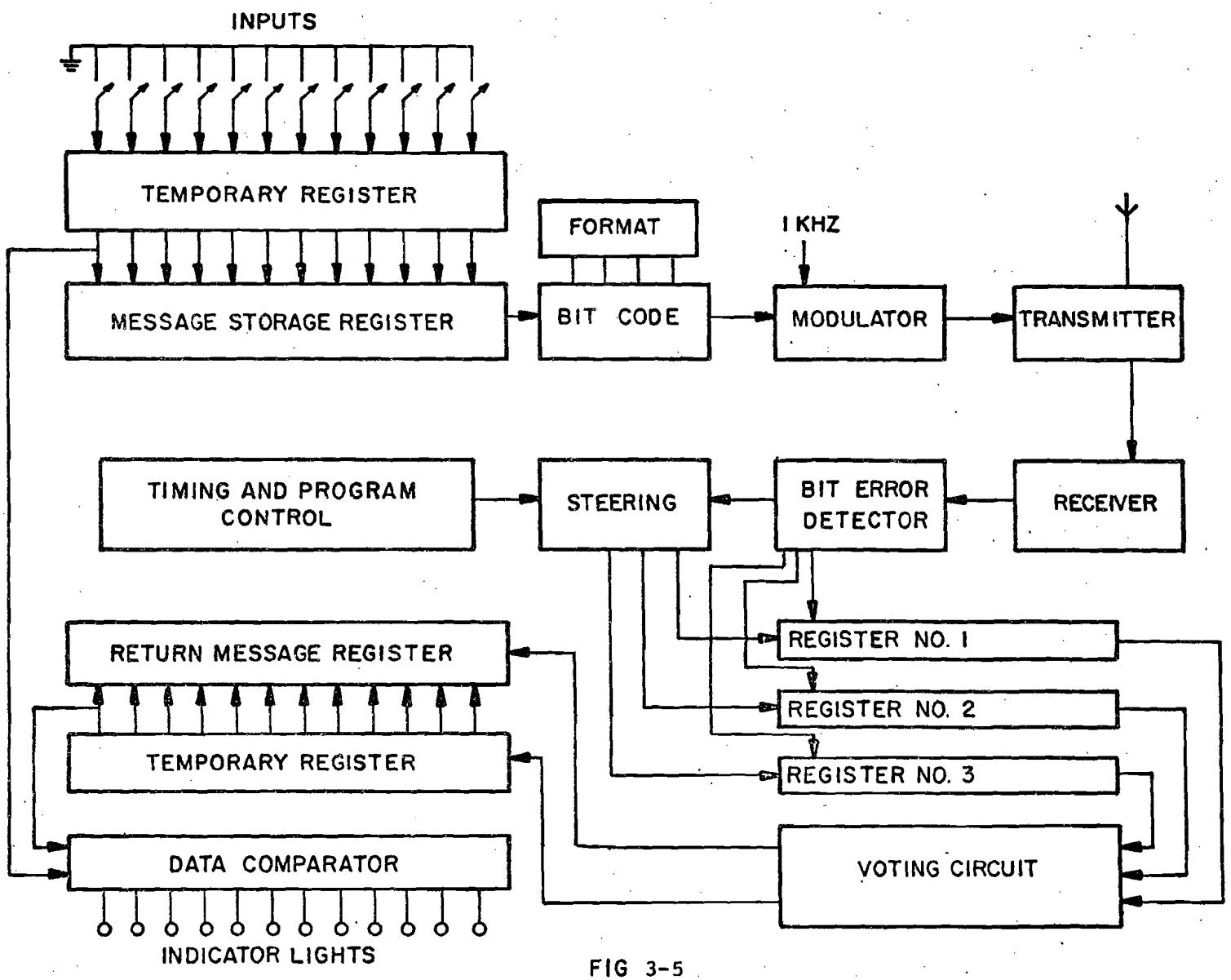

FIG 3-5
MESSAGE FLOW DIAGRAM

past a voting network which requires two identical bits to pass the data. If this condition is not satisfied for all 12 positions, the entire message is dumped. This technique provides high immunity from false messages.

Since the messages are handled serially, the only basic limitation to the allowable number of remote stations is message cycle time. Allowing 74 milliseconds per message, 10 messages plus sync would require 774 milliseconds transmit time plus 740 milliseconds reply time for a total of 1.5 seconds message cycle time. This seems to be an acceptable delay, and the equipment as presently built has counters and decoders for ten channels although only two are being installed in the evaluation unit. By changing a single wire, the unit will count over only the channels actually installed. For example, the present system with two remotes, cycles about three times per second. For commonality, central and remote digital electronics are identical, the functional difference being enabled by grounding a single terminal at the central unit. This terminal is identified as Remote Select-High, terminal P1-17 on board 2.

3.4.3 Noise Immunity

The chance of noise penetrating the bit error detector is 1/8. The chance of filling an entire register with noise is therefore $(1/8)^{12}$. The chance of entering a noise pulse in the second register is again 1/8, making the chance of noise in two registers $(1/8)^{13}$ or 1.8×10^{-12}/cycle. At one cycle/sec or 31.5×10^{6}/yr, this should happen once per 1.7×10^{4} yrs, indicating that white noise in the data channels will not represent a false alarm problem.

This analysis does not take into account the sync word, which is 17 milliseconds long, giving $(1/2)^{34}$ chance of being actuated by noise every second. This is a false alarm rate of $.6 \times 10^{-10} \times 2 \times 10^{9}$ or .12/yr for a total noise immunity of 2×10^{5} years. A short burst of noise, less than 24 milliseconds during the message period would be outvoted by the other two registers, and therefore also represents no problem. Therefore, neither a long burst of noise nor a short burst or pulse will be a false alarm threat.

Susceptibility to synchronous interference will vary widely with the character of the interference, but this type of radiation would be extremely rare compared to random noise, and so probably does not represent any greater hazard.

3.4.4 Noise Immunity Tests

Various types of noise were transmitted on the system carrier frequency including hash from brush type motors, noise modulation of an auxiliary transmitter on the same frequency, and sine and square wave modulation with on and off keying. After some redesign of the as-received assemblies, none of the interfering signals produced a change at the remote stations, even though sufficiently strong signals could paralyze the system and prevent transmission in either direction. It was concluded that the message encoding technique resulted in a noise immune system up to the overload point, and that noise would never cause erroneous operation of a remote unit.

A final check was made to verify operation over the specified 5 mile distance. The unit operated satisfactorily over distances of 5 miles, 12 miles, and 17 miles over an average terrain consisting of residential sections with houses and trees, and open areas with some small hills.

Section 4

Description of Equipment and Operation

4.1 Physical Description

The radio control link system configured for the field evaluation unit is comprised of three sets of equipment; one set for a central control station and one set for each of two remote control stations. Figure 3-1 schematically shows these sets and their interconnections. The main elements are the "E" box (A1, A2, A3) which is the heart of the system and contains the Digital Processor, FM Transceiver, and Power Supply; the Control and/or Display Panel (A5, A6, A7); the Battery Unit (A9); and the Antenna (A10).

4.1.1 Central Control Station Set

Figure 3-1 shows the central control station set. It can be seen that the set consists of the following units:

1 Weathertight Enclosure ("E" Box) containing the following assemblies:

- Digital Processor
- FM Transceiver
- Power Supply

1 Control and Display Unit, housed in an aluminum transport case

1 Battery Unit

2 Directional Antennas. (In general one antenna will be required for each remote control station, subject to site considerations)

Figure 4-1 is the "E" box interconnection diagram. The "E" Box, which houses the transceiver, the digital processor, and power supplies, is rain proof but not hermetically sealed.

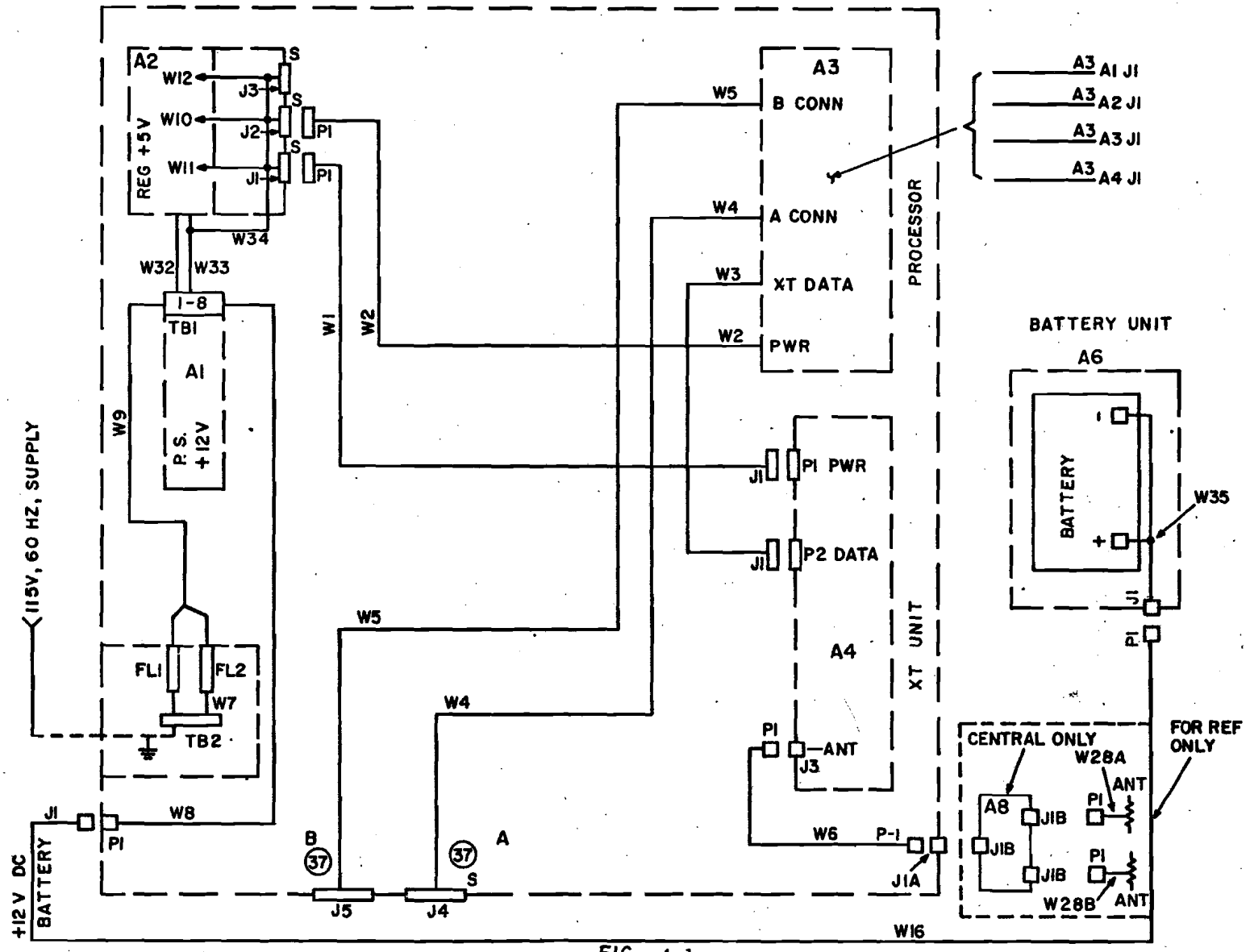

FIG 4-1
"E" BOX INTERCONNECTION DIAGRAM

To handle the condition of moisture entering the box by breathing, replaceable desiccant bags are provided. The transceiver is further protected from the effects of high humidity by its location, directly above the power supplied, which develop most of the heat in the unit. High temperature effects are minimized by painting the box with titanium white to minimize absorption of solar radiation; sizing the box large enough so that the temperature rise is only 6°C; and by protecting it from the sun by a shed roof.

The control and display unit and the battery are relatively insensitive to climatic conditions and each is mounted in its own transport case which protects it from direct contact by the elements.

The metal enclosures afford EMI protection to the equipment inside. A. C. power is filtered and all other cables are shielded to control the electromagnetic radiation in and out of the enclosures.

4.1.2 Remote Control Station Set

For maximum flexibility and minimum spare part provisioning, each remote control station set is similar in configuration and appearance to the central control station set. The main difference is in the digital processor, as described in 4.2.

4.2 Digital Processor

The Digital Processor is mounted in the "E" box and consists of a nest with connectors and plug-in type printed circuit (PC) logic boards. Fourteen and sixteen pin integrated circuit DIP chips are mounted on the PC boards and wire wrap interconnections are used throughout the processor. The evaluation central unit has four boards (A1, A2, A3, A4). The first remote unit has three boards (A1, A2, A3) and the second also has three boards (A1, A2, A4). The system is designed so that the A1 boards are interchangeable with each other, the A2 boards are interchangeable with each other, and the A3 and A4 are

are interchangeable with each other.

The essential difference between the central and remote Digital Processors is that the central unit has one type A3/A4 PC board for each remote station, whereas each remote unit has only one type A3/A4 PC board.

The logic diagram and assembly drawing for each of the logic boards are included with this report. Each board has a two sheet drawing which is identified by the following number.

Drawing 5D022	Command and Status (Board 3/4) Logic Diagram and Assembly
Drawing 5D023	Channel Select and Data Control (Board 2) Logic Diagram and Assembly
Drawing 5D024	Bit and Frame Sync Timing (Board 1) Logic Diagram and Assembly

4.3 Transceiver

The transceiver is Model #FM-2101, manufactured by Sonar Radio Corporation of Brooklyn, New York. The Instruction and Service Manual provided by the manufacturer is included with this report. The manual details the specifications, layout, schematic, parts list, etc., of the transceiver.

4.3.1 Transmitter Modifications

Figure 4-2 shows the modifications made by ASE to adapt the transmitter to remote control requirements. These include:

a. Remove mechanical T/R relay and replace by ASE-built electronic T/R switch. This modification is to reduce the T/R switching time from 50 milliseconds to less than 2 milliseconds required for telemetry operation.

b. Modify the modulator for square wave input, with sharp cutoff above 1.5 KHz to control sideband radiation.

c. Add a line receiver interface chip to accept digital input from balanced line and deliver single ended output to T/R switch and modulator.

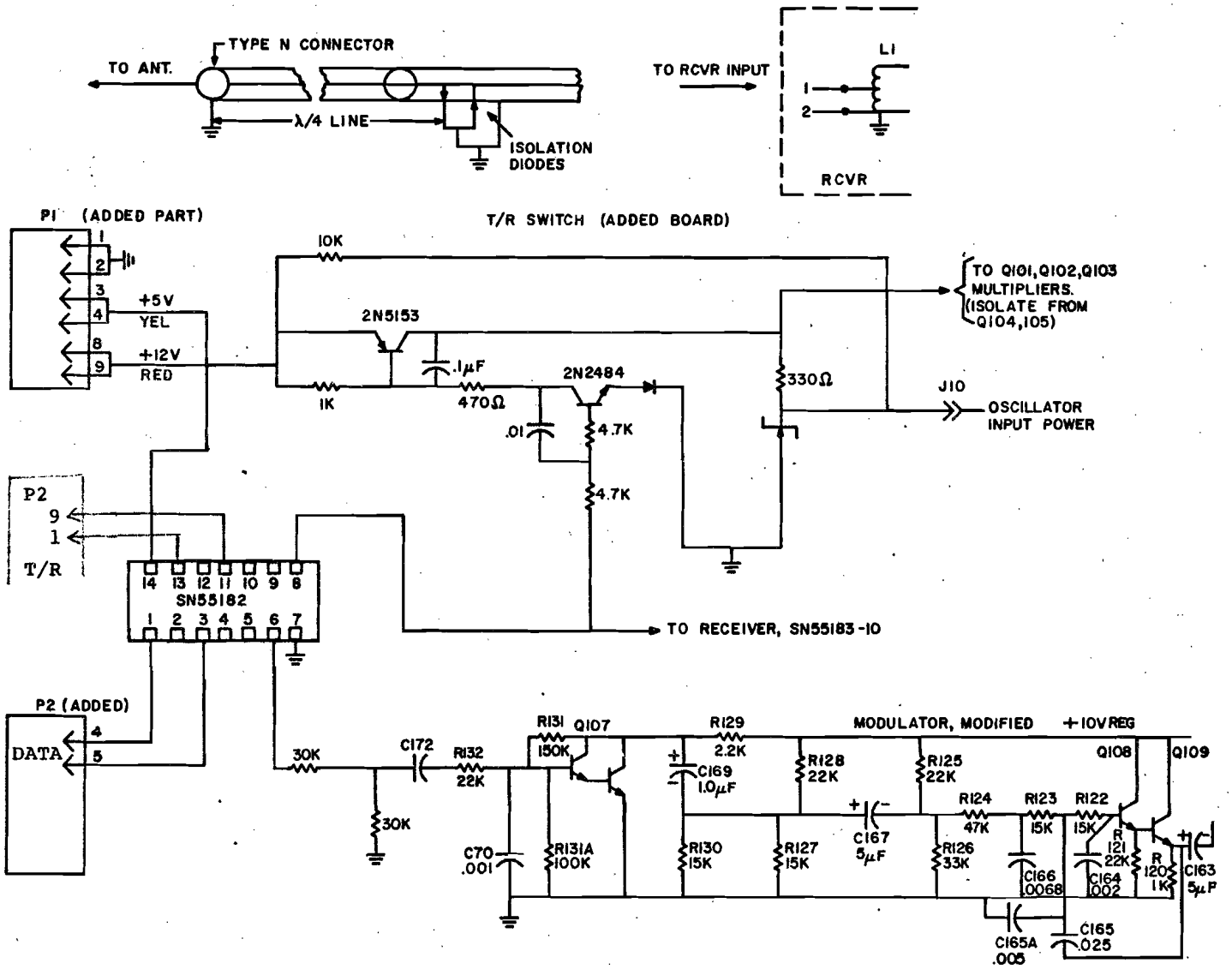

FIG. 4-2
TRANSMITTER MODIFICATIONS

d. Re-tune transmitter output stage to reduce power from 10 watts to 3 watts for longer life of semiconductors.

e. Change antenna jack from UHF to Type N, MIL version.

f. Add MIL-type connectors for 12V power, and input and control signals.

4.3.2 Receiver Modifications

Figure 4-3 shows modifications made by ASE to adapt the receiver to remote control requirements. These include:

a. A quarter wave line with diode termination between the antenna jack and the receiver input to isolate the receiver input from the transmitter output without affecting receiver performance.

b. Modification of the output amplifier for regeneration of square wave signals.

c. Addition of a line driver to develop balanced output for driving the digital processor (U17, Board A1).

4.4 Control and Display Unit - Central

Figure 4-4 shows the central control and display schematic. S1 to S7 are the individual panel switches, S8 the rotary switch (brightness). S17 controls the entire channel, Channel A; S18 for Channel B. The 100 OHM resistors limit the L.E.D. current to the 16 milliamps rating of the SN54136 drivers. Switch 1 is reserved as remote battery monitor. When a remote goes on battery, Light No. 1 flashes and the alarm sounds. Throwing Switch 1 on removes the fault signals, and signifies to the operator that the remote unit is on battery power, which is good for three hours minimum. Restoration of AC power again gives a fault indication and the operator is alterted to restore the switch to the off position.

For other than battery alarms, a switch (S19) is provided to silence the beeper. Momentarily throwing it to off silences the alarm until clearing of the fault which restores the alarm

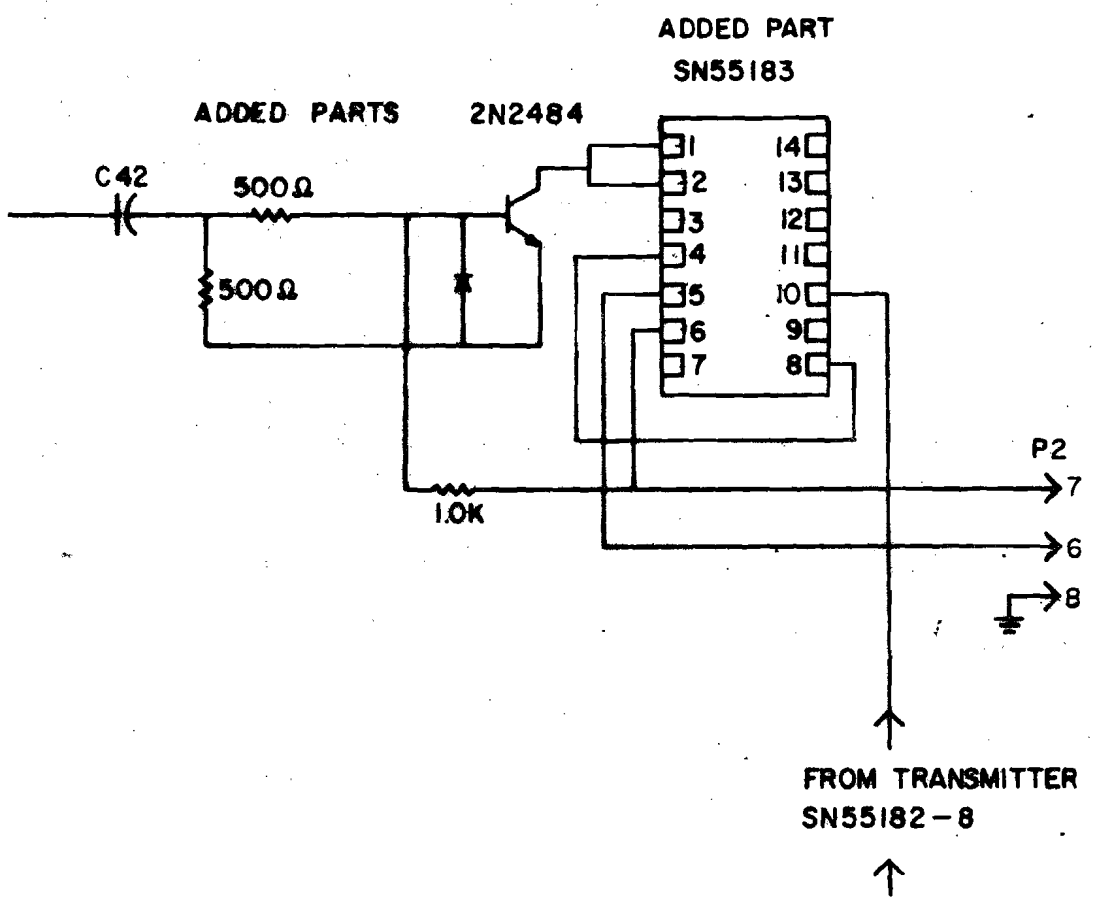

FIG 4-3

RECEIVER MODIFICATIONS

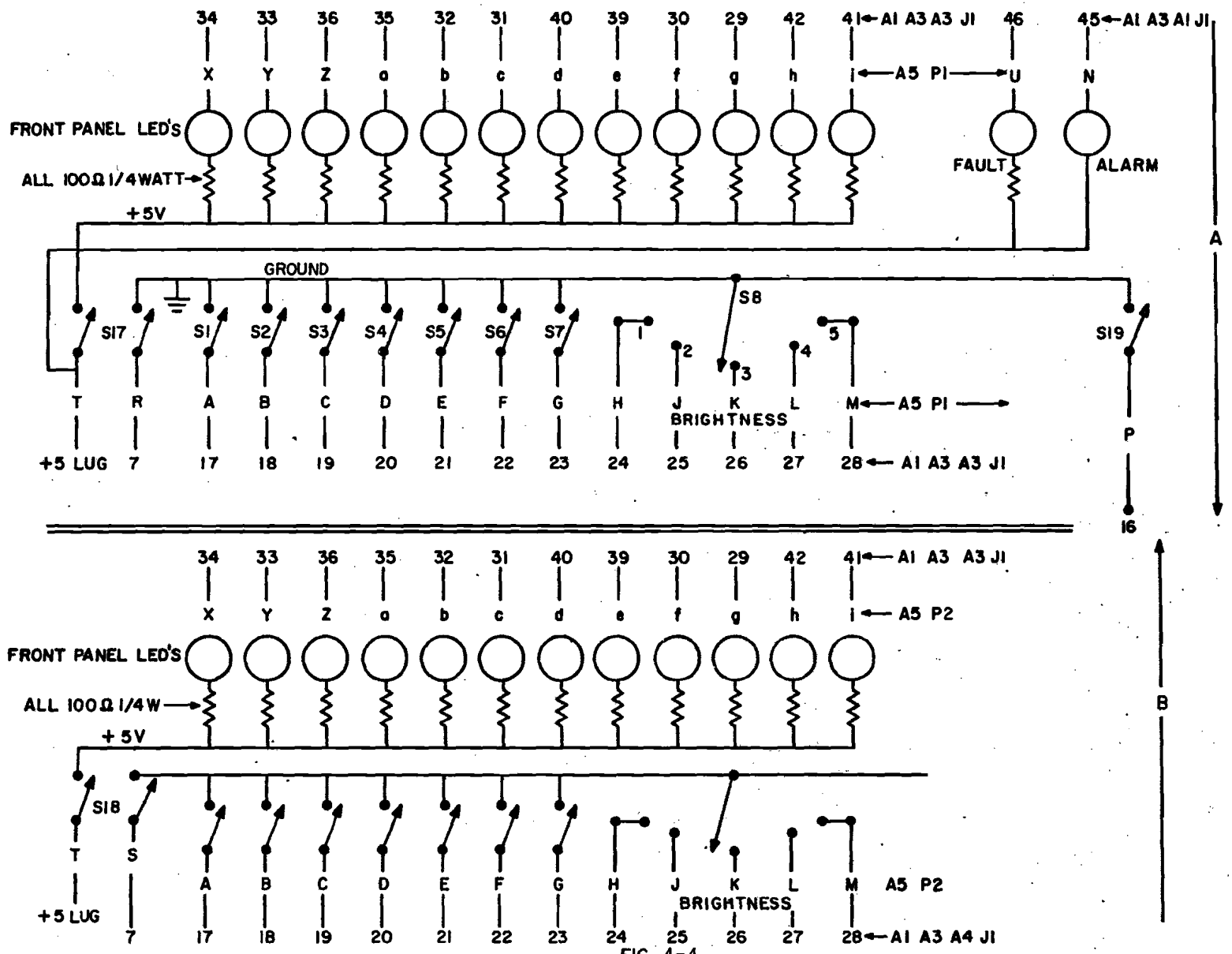

FIG 4-4
CENTRAL CONTROL AND DISPLAY UNIT (A5)

to the ready condition. If the switch is left off, the audible alarm will not sound.

4.5 Remote Display Units

These units contain only the L.E.D's and current limiting resistors, and are for visual monitoring only. The schematic is shown in Figure 4-5. Note that one wire is different in the A&B versions, requiring that A6 be used in Connector 4, and A7 used in Connector 5, together, of course, with Board A2/A4 in Slot 3, and Board A3/A4 in Slot 4, respectively.

4.6 Antennas

The antennas are YAGI-UDA configuration modified by the manufacturer by shifting the element spacing and lengths to permit matching a 50 OHM line directly. This makes a tee or balun unnecessary, and improves the structural and electrical reliability. See Figure 4-6 and Figure 4-7. This antenna is proprietary with the Phelps-Dodge Company.

The central unit has two directional antennas which are brought into the "E" box through a power splitter which proportions the power to each antenna according to the distance to the remote station. The schematic for the power splitter in the evaluation unit is shown on Figure 4-8.

4.7 Power Supplies

The power supply delivers 12V to the transceiver, 5V to the digital processor, and 6V to the 1 MHz master timing oscillator. An additional requirement is to provide 3 hours of operation in event of A.C. power interruption. These are met by deriving all power from a 14V power supply with a 12V storage battery floating on the line.

Twelve volts is used directly by the transceiver, and 5V is from a 5V regulator which operates from 12V input. Six volts for the oscillator is produced by a resistor-zener combination which is not properly part of the power supply, but is included

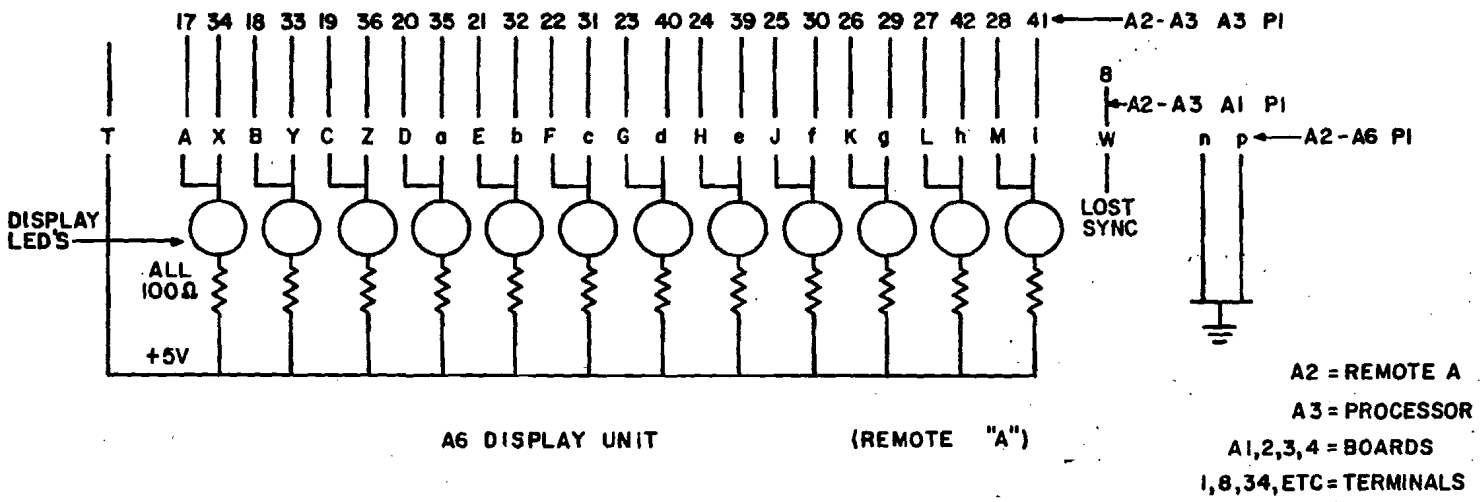

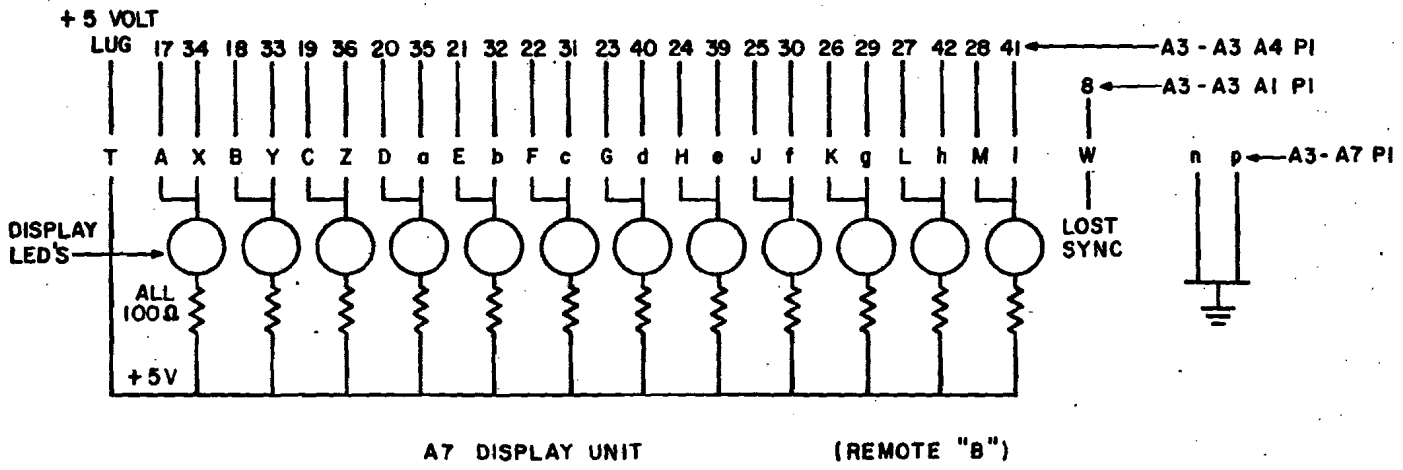

FIG 4-5
REMOTE INDICATOR UNITS (A2 A6 AND A3 A7)

Reflector	35 31/64
Driven Elem.	32 1/16
1st Director	31 11/16
2nd Director	31 11/16
3rd Director	28 15/32
R To De	10 5/16
De To D1	10 21/32
D1 To D2	13 47/64
D2 To D3	13 47/64
Bandwidth	1.5:1 VSWR
161.589 MHz - 168.941 MHz	
166.2 MHz 1.1:1 VSWR	

USED ON

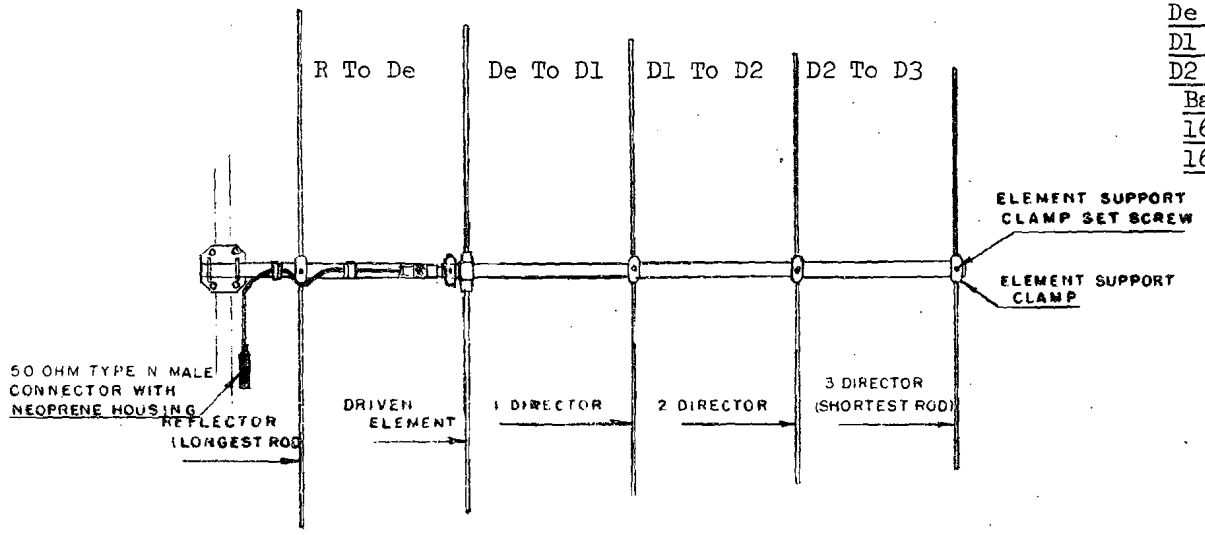

THE ELEMENTS ARE PROGRESSIVE IN LENGTH. THAT IS EACH ELEMENT FROM THE 3RD DIRECTOR TO THE REFLECTOR INCREASES IN LENGTH.

NOTE: ALL ELEMENTS MUST BE CENTERED IN ELEMENT SUPPORT CLAMPS. ALL ANTENNAS ARE ASSEMBLED FOR TEST AND THE ELEMENT SUPPORT CLAMP SET SCREW INDENTATION IN THE ELEMENT MAY BE USED FOR CENTERING.

S.O. 92912 Freq. 166.2 MHz

Unless otherwise specified — All dimensions are in inches and title block tolerances apply. All thread dimensions to be met after plating where applicable and are to be gauge checked. Break all sharp edges .010-.015 after finish machining. All machined surfaces shall be smooth within 63 micro inches.

REVISION		
0	REDRAWN Rom S 3RE 4-10-70	1
	REDESIGNED TO 6.89 x 2.88 DRIVEN ELEMENT CONNECTION 5/8-73	2

Figure 4-6 Directional Antenna

DIMENSIONAL TOLERANCES		
BASIC	FRACTIONAL	DECIMAL
0"-1"	± .010	± .003
1"-6"	± 1/64	± .005
6"-24"	± 1/32	± .008
ALL ANGLES ± 1°		

TITLE FIELD ASSEMBLY INSTRUCTIONS FOR CAT.NO.390-509 YAGI ANTENNA

DRAWING NO. M-25666A

DRAWN BY SLP APPROVED BY

phelps dodge Communications Company Marlboro, New Jersey

© D & W REPROGRAPHICS 8031-1

BASE STATION YAGI ANTENNA

(8.0 db Unidirectional Gain)

CAT. No. 390-509, FREQUENCY RANGE 150-174 MHz*

CAT. No. 390-509 YAGI ANTENNA is designed for point-to-point communication where the half power points must not exceed 80° in horizontal plane. The antenna is a single 5 element Yagi made of 6061-T6 aluminum alloy. It is supplied with hot galvanized steel hardware to fit 1¼" diameter tower legs, 1-5/16" O.D. pipe and 2⅜" O.D. pipe. Provision is made in the mounting arrangement for either vertical or horizontal polarization.

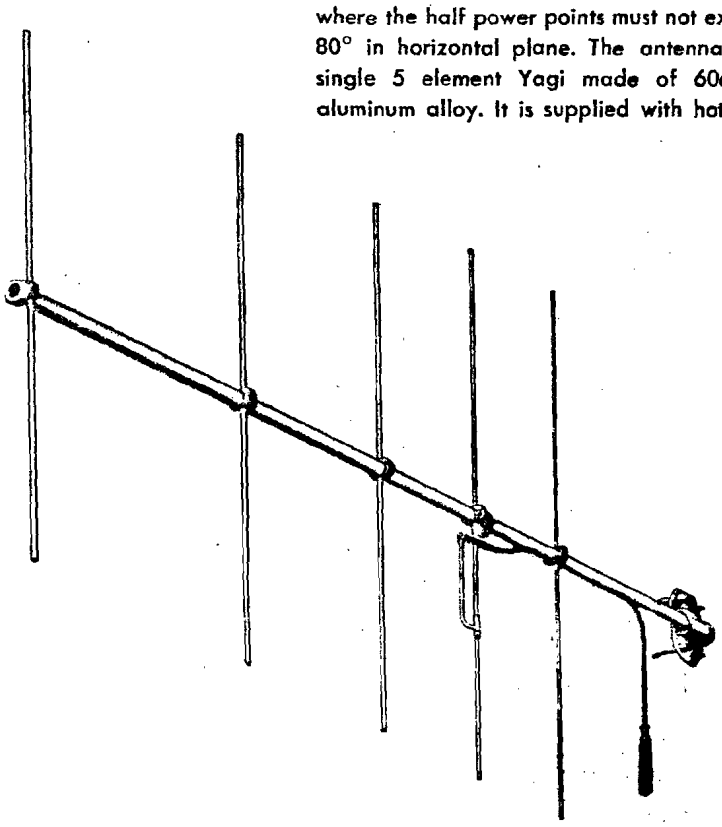

SPECIFICATIONS

Electrical

Nominal input impedance	**50 ohms**
Maximum power input	**500 watts**
Flexible termination extension	**36" of RG-8A/U**
Termination	**Type N Male with Neoprene housing**
VSWR	**1.5:1**
Bandwidth	**5.0 MHz**
Forward gain	**8.0 db**
Front-to-back ratio	**20.0 db**

Mechanical

Element material	**3/8" diameter aluminum rod**
Element support	**1-1/16" diameter aluminum pipe**
Element support length	**80" at 150 MHz**
Rated wind velocity	**100 MPH**
Lateral thrust at rated wind	**29 lbs.**
Weight	**8 lbs.**

** Exact frequency must be specified*

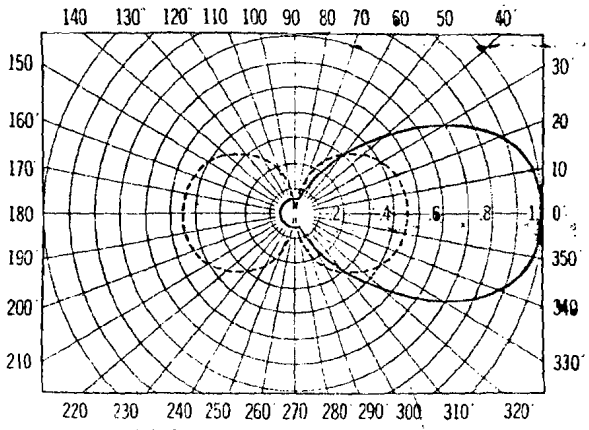

Horizontal field strength pattern of Cat. No. 390-509 when antenna is horizontally polarized. A dipole pattern is shown for reference.

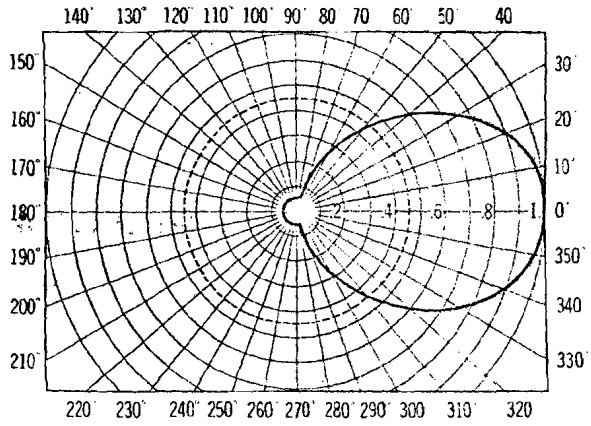

Horizontal field strength pattern of Cat. No. 390-509 when antenna is vertically polarized. A dipole pattern is shown for reference.

FIGURE 4-7 ANTENNA PATTERN

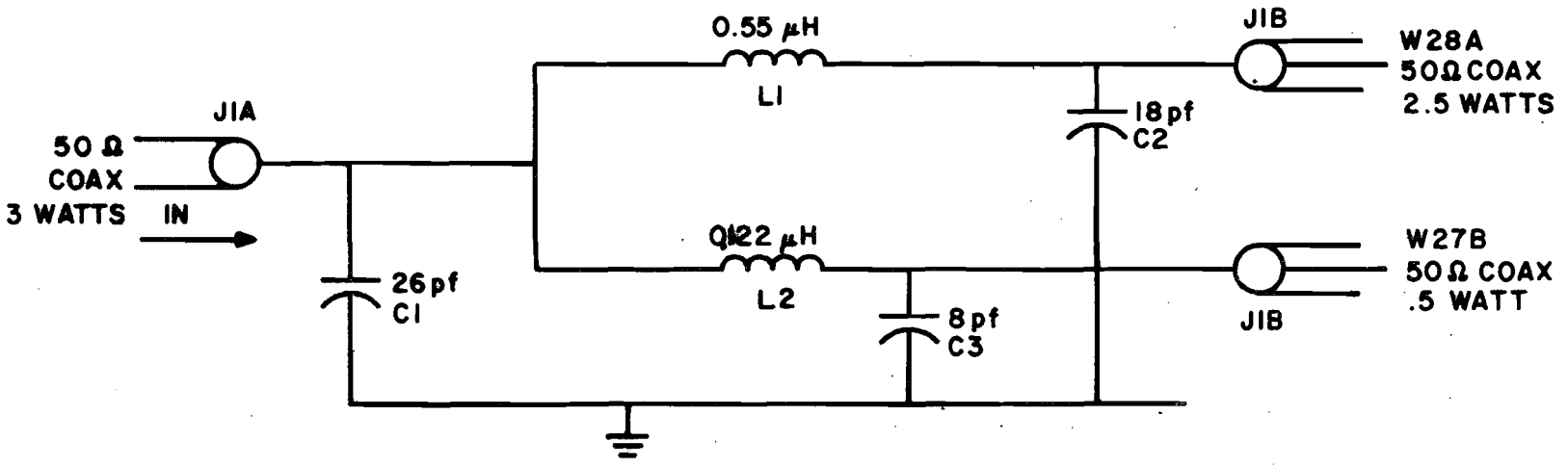

C1 26pf DIPPED MICA

C2 18pf DIPPED MICA

C3 8pf DIPPED MICA

L1 0.55μH 1/4" O.D., 1/4" LONG 3.5 TURNS NO. 16 WIRE

L2 0.122μH 1/4" O.D., 1/2" LONG 6.9 TURNS NO. 16 WIRE

FIG 4-8

POWER SPLITTER SCHEMATIC

on Board 1, and accepts 12V input (J1-14). See Figure 4-9. The 5V regulator is provided with a large heat sink. The 14V power supply is convection cooled.

Emergency power is from the 12V battery that floats across the 14V bus, keeping the battery fully charged and making the transition from AC power to battery power instantaneous with no interruption in transmission or operation. No additional circuitry or relays are required to effect the transfer of power.

AC power comes to the unit through a box containing filters for control of electromagnetic radiation in both directions. All other cables entering the cabinet are shielded for the same reason.

Thermal and overload protection are inherent in both the main power supply and the 5V regulator, and to remove the chance of trouble from flexible cords and plugs, the units are conduit wired into the disconnect switch or distribution panel. No switch is provided on the unit itself.

4.8 Electromagnetic Interference Control

Control of electromagnetic interference is established in two ways: shielding and filtering.

Most of the components are protected by being enclosed in metal containers. Components and wiring not inside the Main Box ("E), are in other metal containers connected to the "E" box by shielded cables.

The only wires that cannot be shielded are the 115V AC power and the antenna. A. C. power (W17) is brought into the unit through line filters FL1, FL2 located in a separate metal box inside the "E" enclosure. The antenna is brought in via coax line which shields all but the radiating elements. Inside the transceiver are additional band pass filters to reject radiation outside the telemetry band.

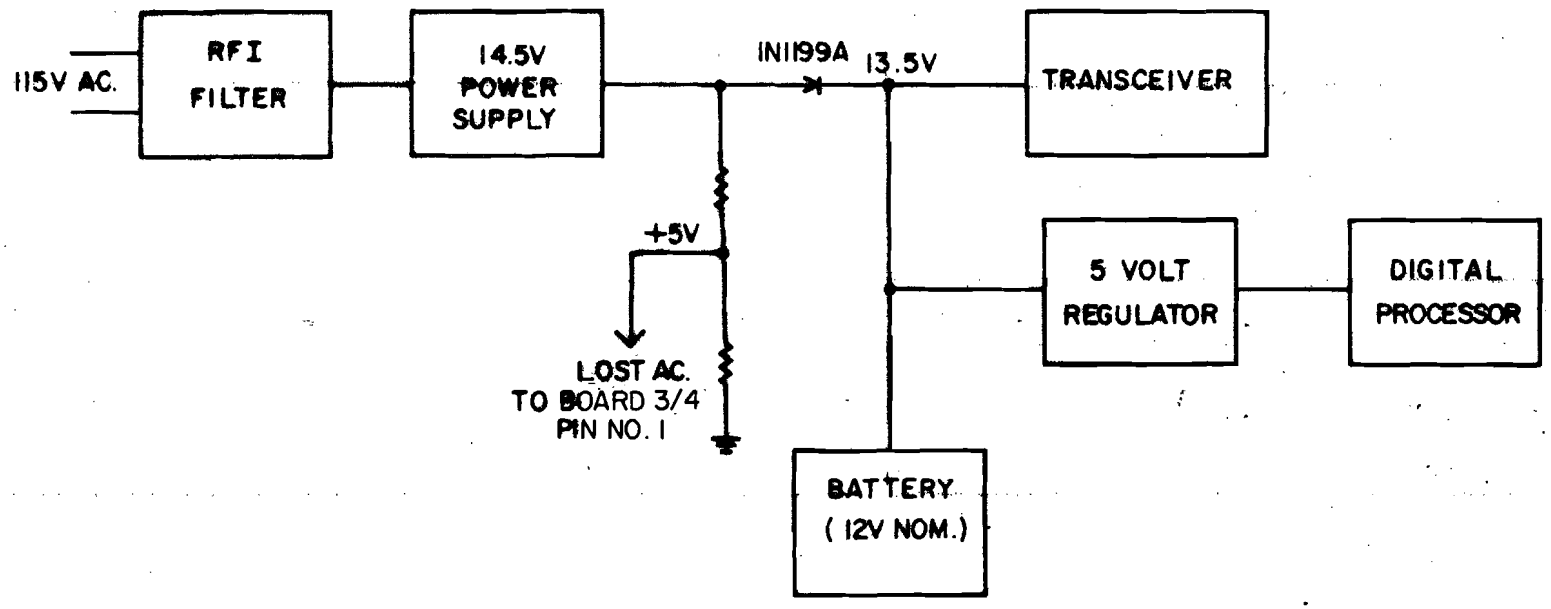

FIG 4-9

POWER SUPPY CONFIGURATION

to registers U28, U29, and U30 from where it is clocked out serially at 500 Hz (Pin 15) to the modulator (on Board 2). All three inputs to U34 must be low for this operation. The data, at 500 Hz rate, are passed from Pin 44, Board 3 to Pin 36, Board 2 where the modulator, which runs at 1000 Hz, converts "1" to "1,1", and "0" to "0,0" for transmission. Modulator output is fed to the transmitter by line driver U23 through Pins 34 and 35.

When received remotely, the message is delivered by the radio receiver to line receiver U17 on Board 1 through Pins 10, 11. It is passed through U46 and out Pin 27 to the voting section U43, U44 and U45. Each message is transmitted three times without delay. The first transmission is stored in Registers U29, U41, Board 2; the second transmission stored in U28, U40, and the third in U27, U39.

The timing diagram, Figure 3-3, shows that at this point there is a 2 millisecond hiatus. The purpose is for message processing, as follows: "pusher pulses" at 8 KHz, from Pin 7, through U17 and U16 feed the stored data past the voting circuits, out to Pin 20, Board 2. The 12 bits of data, at 8 KHz, require 12/8 = 1.5 milliseconds, hence the 2 millisecond processing period. The message moves to board 3/4 via Pin 43, Board 3/4. into the Registers U43, U44, U45. If it is approved by the voting circuit, it is shifted into Registers U31, U32, U33 to drive the display lamps through exclusive-or's U7, U8, U9 and U16, U17, U18. In the central unit these also compare transmitted signal with readback (for "same" or "different") to control error displays.

In remote, the signal that arrives on any pin, for example 35, is fed back to its companion directly above at top of drawing, in this case, Pin 20, for readback to central. This completes the message flow from central to remote and back to central.

5.2.2 Timing and Message Control Signals

All message timing and control derives from a 1.0 MHz crystal oscillator which is counted down in binary to provide the required frequences of 125 KHz, 8 KHz, 2 KHz, 1 KHz, 500 Hz, 2 Hz, and 1 Hz. The last six are binary derivatives 125 KHz, and are rounded off for convenience. (8 KHz is actually 7.8125 KHz, 1 KHz is 976.5625 Hz, etc. The counting is done in the chain U4, U5, U7, U8, U9, U10, and U11.

One KHz is fed into U3, Board 2 to drive the program counter whose basic element is U4 (count to 12). It also generates a stream of 1 KHz "ones" to synchronize the remote clocks. Fifteen "ones" (bit sync) are followed by "frame sync", which is 0001110001010101 0, all at 1 KHz. At the end of frame sync, the first transmission of Message "A" starts without delay, but although modulated at 1 KHz, is stepped through the system by 500 Hz, "double bitting" each bit for security. After Message "A", there is a two millisecond hiatus in the program control signals, which are generated in U8, U32 and U9, and repeat every 72 milliseconds. 72 milliseconds is the time required to send three messages of 24 milliseconds each. After four such cycles in central (two in each remote, one receive, one transmit) the program control generates "end cycle", a one millisecond pulse which resets registers and restarts the sync, A-XMIT, B-XMIT A-RCV, B-RCV sequence. Note that "end cycle" restarts central in "sync", but remotes restart in "receive", and do not begin message timing until arrival of "frame sync".

After central has transmitted messages A and B, it halts the 1 KHz for 2 milliseconds to permit processing of message at Remote B, and then for another 2.625 milliseconds to allow for transient settling in transmitters and receivers, and for delay equalization. Transit time of a message from central to remote and back through central is 0.625 milliseconds minimum. After Remote A has transmitted, there is another 2 millisecond delay to permit Message A

processing at central, shutdown of Remote A transmitter, and start of Remote B transmitter. There is no delay at end cycle since there is plenty of time during "bit sync" (15 milliseconds) for transient settling.

Selection of proper registers and message sequence is programmed from data XMIT/REC Register U9, Channel Counter U10, Channel Selector U11, and Clock Selector U16, Board 2.

Transmit/Receive steering is generated in the "XMIT/REC Control" Block U8, U32 which also generates the important "End Cycle" signal.

5.2.3 Message Security

Three techniques are used to provide message security: phasing, bit encoding, and frame sync. The first is inherent in the Manchester split phase method of transmission. If an interfering message is not in the proper phase, it will not operate the system. The second, bit encoding is the previously mentioned "double bitting". Thus, a "one" becomes 1, 1, or which is high-low high-low = HLHL. Then "zero" is LHLH, and these are the only combinations permitted by the "Bit Error Detector" U46, U23, U35, U34 on Board 1. The arrival of any of the other fourteen possible combinations results in rejection of the entire 24 milliseconds section of the message.

The third safety technique is the frame sync code word which is 00011100010101010, which, when translated into highs and lows gives a 34 position code with 2^{34} possible combinations, only one of which will open the message gate U16 Board 1. Decoding is done by the network U18 to U22 plus U30 to U34.

The use of triple transmission and voting works in conjunction with bit encoding to improve the chances of delivering a correct message. At the same time the chance of accepting a false message as a result of random noise is reduced to the vanishing point.

5.3 Control and Alarm Sequence

When a switch is operated, the datum is stored in register and transmitted to the appropriate remote station, and simultaneously the indicating lamp is connected to a 2Hz supply which causes it to blink until the readback signal arrives and gives a steady voltage verifying that the command has been executed at the remote station. If, for any reason, the readback fails to agree with the command, the light blinks for 10 seconds, then lights a fault indicator lamp and sounds an audible warning to alert the operator who can then silence it and take appropriate action. If, during a fault condition, the readback comes into compliance, the alarm circuits are reset to zero.

Of the two directions, readback is the weaker link. When central transmits, all remotes synchronize to the received signal regardless of its phase. If the signal is weak or erratic, but a message is once received it is remembered until the next valid transmission. However, if a valid sync is not received, the remote station will not reply at all, creating an alarm condition at central even though the commands may have been correctly executed. Also, the outward transmission is independent of variable time delays and phase shifts, but central reception requires accurate time delay compensation beside being dependent on successful outward transmission.

is measured in terms of weeks or months.

6.2 Recommendations

The following recommendations are suggested for improving the system and increasing its utilizing for NAVAID control.

6.2.1 MIL SPEC Parts

The transceiver parts are not all MIL equivalent, nor do all of them have direct MIL replacements. To improve the failure rate (MTBF) the components that contribute significantly to the failure rate should be replaced with a similar MIL part and associated circuitry modifications if necessary. Component burn-in and environmental tests should be performed to verify the modifications.

6.2.2 FM Frequency Drift

Temperature tests of the evaluation system have indicated that the signal transmission has been interrupted when wide temperature variations are encountered. This is due to a loss of available bandwidth resulting from oscillator drift.

The present oscillators use up 2 KHz of the available 6 KHz channel bandwidth. Communication reliability can be improved by incorporating stabilized oscillators into the FM transceivers. Stabilization may be achieved in several ways:

a. Use temperature stabilized oscillators at all positions.

b. Use temperature compensated oscillators at all positions.

c. Use a stabilized oscillator in central transmit, and AFC all other oscillators.

d. Depend on the central unit being kept in a temperature controlled location, and use one of the above techniques for exposed locations.

Each method has its advantages and disadvantages as described below.

6.2.2.1 Temperature Controlled Oscillators

Temperature controlled oscillators are the most stable, but are the largest, the most expensive, and require extra power for the heaters. They also have a start-up stabilization period of fifteen minutes to one hour and will require extra mounting space outside the transceiver.

6.2.2.2 Temperature Compensated Oscillators

Temperature compensated oscillators are the next most stable, being available in $\pm$ 1 ppm over the temperature range -30 to +60°C, which is adequate for the application. They have no start up transient time, and require no extra power. They are sufficiently large that two of them could not be mounted in the available space of the existing transceiver, but would require a separate unit, like the temperature controlled oscillators. However, one could probably be located inside the transceiver if all other oscillators were controlled by AFC.

6.2.2.3 AFC

The availability of varactors, and the presence of a discriminator in the receiver makes the AFC system attractive, requiring however, some development work.

6.2.3 Control Interface with NAVAIDS

The evaluation unit installed at NAFEC displays the control signal received from the central unit by turning a light on or off at the remote station. Although this is adequate for evaluating the radio link system it is recommended that additional equipment be designed to interface with and control various NAVAIDS. This will demonstrate the utility of the radio link system more fully.

Two possible interface systems are described below.

6.2.3.1 Control Interface Using Existing Control and Displays

The signal generated in the evaluation unit could be used to

activate a remote equipment by adding amplifiers and control relays to the present remote display. Twelve discrete functions could be controlled by this modification.

6.2.3.2 Control Interface With New Control and Display

In order to control NAVAIDS such as runway lighting, with on, off and several brightness settings it is necessary to have a relay for each of the desired functions, and provision for wiring the relay assembly into the control cabinet of the present lighting system.

This entails encoding two or three discretes by means of an encoding switch at central, decoding at the remote, and interfacing to the relays by amplifiers. The relay contacts would be made available through a terminal board to facilitate wiring to the other assemblies.

At the central control, a rotary switch with positions off, on, and five brightness settings would encode three wires. At the remote, decoding networks turn the equipment on and close relays to give the desired brightness. Centerline, touchdown zone, edge, and taxiway lights would each have the above described control, using twelve wires, or one channel, for example, Channel "A" at "Remote One" location. By the same technique, approach, VASI and strobes could be controlled by Channel "B","Remote Two" location. The central control panel for operating these two channels is shown on Figure 6-1.

This modification would require a new central control and display unit which would interface with the present Hoffman Box ("E" Box) by a cable and connector. A new remote display and control unit would be required at each remote location, interfacing with the remote Hoffman Box ("E" Box), but containing relays, terminal boards and provisions for wiring to the controlled equipments.

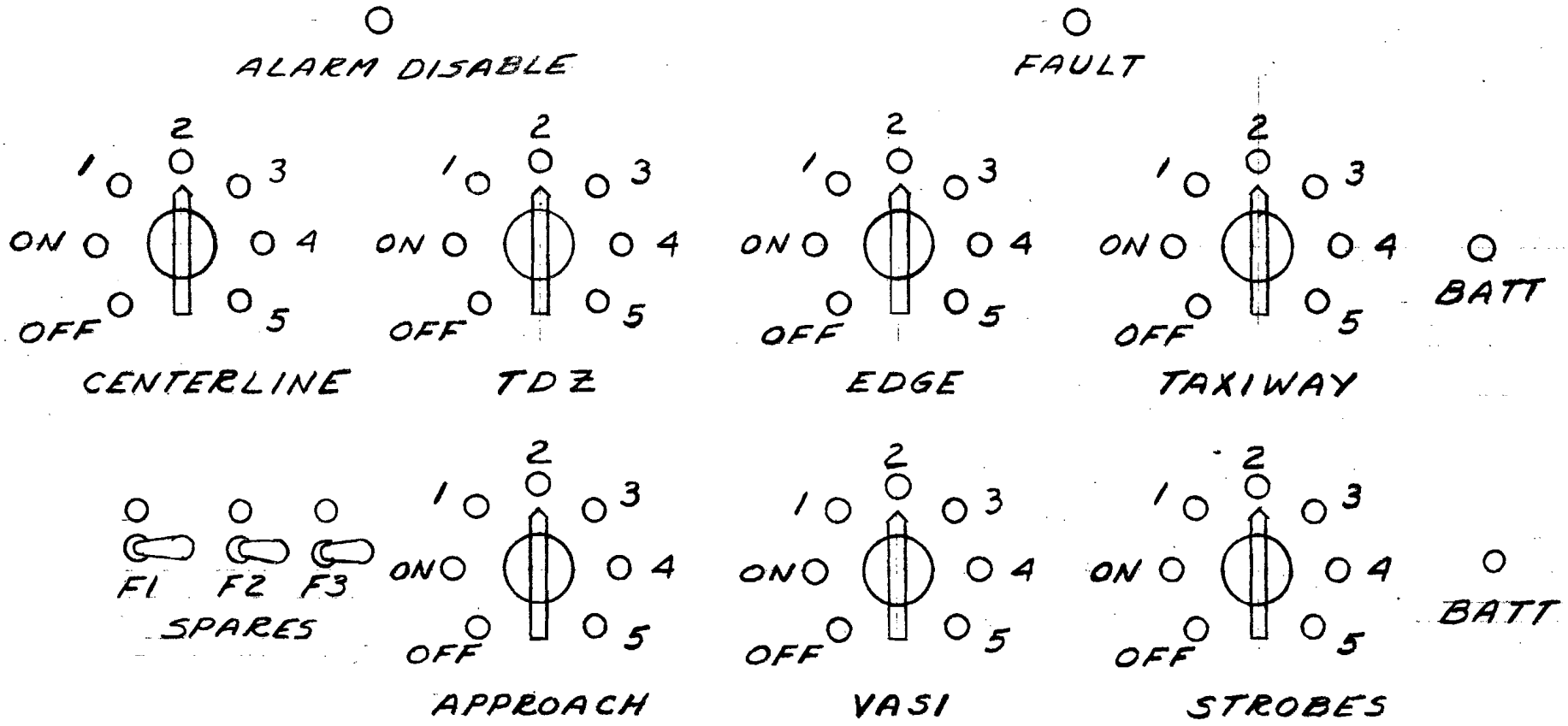

SWITCH LOGIC	
OFF	000
ON	A+B+C
BRT1	010
BRT2	011
BRT3	100
BRT4	101
BRT5	110

FIGURE 6-1 Central Control & Display

Report No. FAA-RD-76-42

APPENDIX A

RADIO REMOTE CONTROL SYSTEM FOR VISUAL NAVIGATIONAL AIDS

FAILURE MODES, EFFECTS, AND CRITICALITY ANALYSIS

Prepared by

Robert W. Harralson
ASE, Inc.

Prepared for

U. S. DEPARTMENT OF TRANSPORTATION
FEDERAL AVIATION ADMINISTRATION
Systems Research & Development Service
Washington, D.C. 20590

TABLE OF CONTENTS

Section		Page No.
	Introduction	i
1.0	Catastrophic Failures	1-1
1.1	Central Transmitter Failure Modes	1-2
1.1.1	No Radio Frequency Output	1-2
1.1.2	No Modulation	1-3
1.2	Central Processor Catastrophic Failure Modes	1-3
1.2.1	No 1 KHz Carrier	1-3
1.2.2	One KHz Carrier but no Modulation	1-3
1.2.3	Message Transmission is Accomplished, Re-transmitted and Received, but Central Alarms	1-3
1.2.4	Message Transmitted but is not Received at Remote	1-3
1.3	Power Supply Failure	1-3
1.4	Central Antennas	1-4
2.0	Partial Failures	2-1
2.1	Catastrophic Failure of a Remote Unit	2-1
2.1.1	No Frame Sync Pulse	2-1
2.1.2	Message is Received but not Re-transmitted	2-1
2.1.3	Message Received but not Stored or Displayed	2-1
2.1.4	Transmission Drifts into Adjacent Channel	2-1
2.1.5	Remote Unit Stops at Arbitrary Points in the Timing Cycle	2-2
3.0	Mean Time Between Failure (MTBF)	3-1
3.1	System Summary	3-2

Failure Mode Effect Anslysis

Receiver	Sheets	1-15
Transmitter	Sheets	16-25
Modulator	Sheets	26-28

Failure Rate Data

System Summary	Sheets	29
Transceiver Components	Sheets	30-36
Digital Processor	Sheets	37
"E" Box Interconnections	Sheets	38
Central Control & Display	Sheets	39
Remote Display	Sheets	40

Introduction

This analysis was prepared for the Radio Remote Control System installed at NAFEC under Contract No. DOT-FA74WA-3433. This system consists of a Central Control Station and two Remote Control Stations.

This analysis considers failure modes in descending order of severity. First, catastrophic failures of the entire system, and their analysis, followed by partial failures of successively less criticality, and analysis of their causes and effects. As an end product, specific sub-assemblies and components are identified as critical items, and some indication is made of the probable causes of various observed malfunctions.

System Mean Time Between Failure (MTBF) is evaluated by summing the failure rates of all significant parts down to the component level, except where a failure rate has been established for a sub-assembly. The system MTBF was computed at 2340 hours using handbook data of ten years ago, which is very conservative in light of the recent development of semiconductors. The system MTBF could be increased to 2950 hours if a more optimistic approach was used.

The failure rate tables of MIL-HDBK-217A do not separate failures by type, severity or cause, but label everything from parameter shift to catastrophic failure in the same way, making it impossible to substantiate catastrophic failure as being any specific fraction of total failure rate.

1.0 Catastrophic Failures

Failure at the system level can be caused by loss either of the central station, or loss of all the remote stations. Obviously, the most probable is loss of the central station, which may result from any of a variety of subsystem failures:

Central Transmitter
Central Processor
Central Power Supply
Central Antenna

The causes of central station failure will also cover the causes of remote station failures. Therefore, except for criticality evaluation, one analysis will cover both situations.

a. Central transmitter failure may be either loss of carrier, including out of limit drift, or loss of modulation.

b. The processor may fail in various ways: Loss of 1KHz carrier, loss of modulation, improper formatting, encoder malfunction, register malfunction, or miscellaneous troubles such as broken wires or poor connections.

c. Central power supply failures may be either temporary, from overheating, or total from some internal catastrophic failure.

d. Central antenna failure may be from poor contacts in the coax connectors, open connection in the antenna, or mechanical damage or short circuiting of the antenna.

Catastrophic failures are discussed in the following sections:

1.1 Central Transmitter
1.2 Central Processor
1.3 Central Power Supply
1.4 Central Antenna

1.1 Central Transmitter Catastrophic Failure Modes

1.1.1 No Radio Frequency Output

Listed on the failure mode sheets are 67 capacitors, of which 58 can cause system failure by an open or short. Also listed are 25 resistors, 21 of which can fail the system by an open or a short, and 15 coils, any of which is a catastrophic failure open or short. The quartz crystal, two varactor diodes and seven transistors are also in this class, for a total of 104 components, the catastrophic failure of any one of which will be a system failure due to loss of carrier.

Causes of failure in capacitors are principally manufacturing defects in ceramic, film, or paper units, plus excessive current, voltage, or temperature in tantalytics.

Resistor failures, beside those due to manufacturing defects, result from excessive heat (the principal cause of shorts) mechanical stress during installation or testing, thermal cycling, and humidity, all of which tend to cause open circuits, which are much more common than shorts.

The quartz crystal, which is hermetically sealed, is most susceptible to mechanical shock or to contact failure in the socket. The other transducer elements are more likely to be destroyed by heat during soldering, or by voltage spikes. Operation above normal rating causes gradual degradation rather than total failure.

Coils are susceptible to the effects of humidity, which may cause either drift by affecting the insulation, or open circuit from electrolytic or chemical action. Short circuit in coils in low voltage stages is relatively rare compared to open circuit.

Unfortunately, the failure rate tables do not separate failures by type, severity or cause, but label everything from parameter shift to catastrophic failure in the same way, making it impossible to substantiate catastrophic failure as being any specific fraction of total failure rate.

1.1.2 No Modulation

Listed on the failure mode sheets are 13 resistors, 9 capacitors and 3 transistors which can cause loss of modulation by their catastrophic failure, open circuit, short curcuit or both. Remarks on the types and causes of failure are the same as for loss of transmitter carrier signal.

1.2 Central Processor Catastrophic Failure Modes

1.2.1 No 1 KHz Carrier

Board 1 of the digital processor generates the 1 KHz carrier from a 1 MHz crystal oscillator and counter chain involving 6 capacitors, 7 resistors and 6 DIP chips. If no 1 KHz is observed at P1-24, Board 1 should be repaired or replaced.

1.2.2 One KHz carrier but no modulation

The central unit continues to transmit as long as it is turned on. If signal is present at J2-36 but not at J2-34 or J2-35, the chips controlling modulation are not functioning properly. (U20, U23, U34, U35) Board No. 2 should be repaired or replaced.

1.2.3 Message transmission is accomplished, re-transmitted and received, but central alarms.

Remote time advance may be wrong (11 micro-sec per mile), or remote voting circuits or registers on Boards 2 and 3 may be faulty. Repair or replce remote boards 2 and 3. Note: This is not strictly a central catastrophic failure since the trouble is at remote sites.

1.2.4 Message transmitted but is not received at remote (assume no trouble in RF link or remote units or central transmission system).

Improper formatting on Board 2, or register trouble on Board 3. Replace Board 2 first, then if the problem persists, replace Board 3.

1.3.0 Power Supply Failure

When any catastrophic failure occurs, the power supplies are the first item to be checked. If 5 volts is present 12V must

be present. Operability of the 12V supply may be checked by disconnecting the battery. If 12V and 5V disappear, the 12V power supply is not functioning.

Battery condition should be checked by hydrometer readings. Operability of the battery circuit is checked by disconnecting the 120V AC supply long enough to see if the unit continues to function without interruption.

1.4.0 Central Antennas

The transmitters have sufficient thermal margin that they can be operated into an open circuit or a short without damage. Therefore, in case of cable or antenna trouble, the central unit may appear to be operating properly, but no signal or a weak signal appears at remote sites.

To check the antenna system, connect a power meter/reflectometer between the transceiver and the power splitter. If it reads low power or high SWR or both, trouble exists in one or both antennas. Each antenna can then be checked for SWR to localize the trouble. The most likely source of failure is in connectors.

2.0 Partial Failures

Certain functions are peculiar to central and remote. Central generates the bit sync and frame sync, but does not decode either of them. The remote does the opposite. Does not generate sync, but does decode it, and uses the acquisition of frame sync to initiate message timing. The following will cover only the remote functions which are different from central.

2.1 Catastrophic Failure of a Remote Unit

2.1.1 No Frame Sync Pulse

If no signal is delivered to J1-11,12 of Board 1, or if the signal is distorted, or noisy, bit sync and frame sync may not be achieved. If no frame sync pulse is generated, message timing and re-transmission will not occur. Repair antenna, receiver, or Board 1 depending on where loss of signal occurs.

2.1.2 Message is Received but not Re-Transmitted

Due to improper timing which may arise from erratic 1 MHz oscillator operation or formatting errors, Boards 1 and 2, or registers on Board 3.

2.1.3 Message is Received but not Stored in Register and not Displayed

Trouble in bit error circuit or voting circuits, or in registers Board 3, or trans/rec data control, Board 2.

2.1.4 Transmission Drifts into Adjacent Channel

The assigned bandwidth is 6KHz, centered at 166.175 MHz. Each transceiver contains two crystal oscillators which have a significant drift plus one with a small, usually negligible effect.

If any of the transmit oscillators drifts more than $\pm$ 1KHz, impaired reception may occur.

Crystal oscillator frequency specification of the transceiver is .0005%, -30°C to +60°C, which means 800 Hz drift. Measured

performance is appreciably worse than this, usually +2KHz at 60°C.

Frequency accuracy is determined by checking central transmit frequency by means of a counter. Central receive and remote transmit may be monitored by the central discriminator. Remote units are adjusted in a similar way: First, set the transmit frequency to 166.175 MHz, then adjust the receive oscillator to center the discriminator.

The 10.7 MHz I.F. and the 455 KHz I.F. are sufficiently broad-band that discriminator drift is not a problem.

2.1.5 Remote Unit Stops at Arbitrary Points in the Timing Cycle

It may lock up in receive, or in transmit of carrier only. This latter condition represents the worst failure a remote unit may have, since steady transmit of carrier may block reception in other units. Cause: 1 MHz oscillator stops, freezing all message control and modulation operations. This malfunction results from high humidity or condensation on Board 1, or from failure of whatever components would prevent operation of the counter chain, such as U27, U15, U4, U5, U7 or U8.

3.0 Mean Time Between Failure (MTBF)

Included in this report are tabulations of all significant components; resistors, capacitors, semiconductors, etc. The failure rates were obtained from MIL-HDBK-217A December 1965 (10 year old data). While much of the data is undoubtedly still valid, the information on semiconductors is proably pessimistic, and since semiconductor devices contribute about 30% of the total failure rate, any improvement in this data would reflect correspondingly on the total computed reliability. The handbook gives a range of failure rates from .05 to 1.0, but no table of criteria for judging whether the MIL Spec units are nearer the upper or lower limits. Using the handbook recommended failure rate of 0.4 resulted in a system MTBF of 2340 hours. If, instead of using 0.4, which is near the upper limit and probably is representative of good quality commercial units of 10 years ago, we use 0.1, which may be a more nearly accurate measure of present day MIL spec units, the failure rate attributable to digital logic would be 34.8, bringing the system MTBF up to 2950 hours.

In the transceiver area, a safety factor of two was used on failure rates of all parts even though some of the components such as tantalytic capacitors are stressed at 2/3 or 3/4 of their rated voltage. If the resistors and capacitors were replaced by Hi-Rel units, and stressed at lower levels, an improvement of about 2.5 could be made in this unit's computed failure rate, bringing it down from 190 to 76, and the system MTBF up from 2340 hours to 3180 hours. In addition, if the more favorable failure rate is used in the digital section, the MTBF would be further increased to 4450 hours.

Failure rate computations: Nominal MIL R-11 Resistor failure rate was taken from Table of FIG. 7.5.3. B, p. 7.5-11 of MIL HDBK 217A. Although most resistors checked were stressed

below .25, a stress ratio of .5, T=55°C was taken as a working average. This gave a base failure rate of .007, which, with an application K factor of 6 gave a failure rate of .042. The accumulated failure rate for all carbon composition resistors is 4.2.

If this number is adjusted for MIL HDBK 217 B, $\lambda_b = .0011$, $\pi E = 1$, $\pi R = 1$, $\pi Q = 1$, $\lambda_p = \lambda_b (\pi E \times \pi R \times \pi Q) = .0011$, reducing the resistor contribution to failure by $\frac{.042}{.0011} = 38$, to .1. This illustrates the reduction in failure rate that could be realized if the latest data (revision B of HDBK 217) was available when this analysis was performed.

3.1 System Summary

A block chart of the system showing failure rate contributions is shown below. It is also tabulated on Sheet 29 of the failure rate data. It is seen that the transceiver is the largest contributor, followed closely by the digital processor.

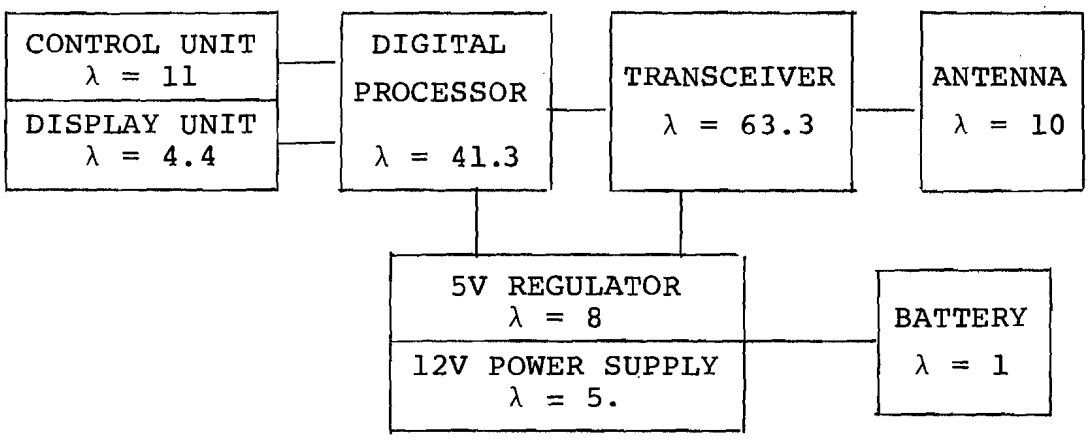

For a 3 group system, as supplied, $\Sigma\lambda = 428$

$$MTBF = 10^6/\Sigma\lambda = 2340 \text{ hours}$$

FAILURE MODE EFFECT ANALYSIS

Sheet 1 of 40

Equip. Nomen. RADIO REMOTE CONTROL Block Diagram (can be put on separate sheet

Equip. Spec. RECEIVER

Equip. Dwg. _____

Date _____

Revision No. _____

Prepared by _____

Approved by _____

A Item No.	B Assumed Failure	C Possible Causes	D Effects and Consequences	E Method of Detection	F Remarks	G Failure Rate	H Failure Class
C_1	SHORT / OPEN	LIGHTNING	NO SIGNAL OR WEAK SIG	INOPERATIVE AT 5MI			
C_1	DRIFT	T/H CYCLING	REDUCED GAIN	MEASUREMENT			
C_2	SHORT/OPEN	MFG DEFECT	REDUCED GAIN (10db)	MEAS.			
C_2	DRIFT		NO EFFECT				
C_3	SHORT / OPEN	MFG DEFECT	REDUCED GAIN	MEAS			
C_4	SHORT	DEFECT	FAILURE	SYSTEM INOPERATIVE			
C_4	OPEN	"	REDUCED GAIN	MEAS.			
C_4	DRIFT		NO EFFECT				
C_5	SHORT	DEFECT	LARGE LOSS of SIGNAL	SYS. INOP or WEAK			
C_5	OPEN, DRIFT		LOSS OF GAIN	MEAS.			
C_6	SHORT	DEFECT	" " "	"			
C_6	OPEN		LARGE LOSS of GAIN	INOP or WEAK			
C_7	SHORT	"	" " " "	" "			
C_7	OPEN	"	LOSS of SELECTIVITY	MEAS.			
C_8			SAME AS C_5				
C_9			SAME AS C_6				
C_{10}			SAME AS C_5				
C_{11}			SAME AS C_6				
C_{12}	SHORT / OPE		LARGE LOSS of GAIN				
C_{13}			SAME AS C_5				

FAILURE MODE EFFECT ANALYSIS

Sheet 2 of 40

Equip. Nomen. RRC
Equip. Spec. RECEIVER
Equip. Dwg.

Block Diagram (can be put on separate sheet

Date
Revision No.
Prepared by
Approved by

A Item No.	B Assumed Failure	C Possible Causes	D Effects and Consequences	E Method of Detection	F Remarks	G Failure Rate	H Failure Class
C14	SHORT/OPEN	DEFECT	REDUCED GAIN	MEAS.			
C15	SHORT	"	FAILURE	SYST. INOP.			
C15	OPEN	"	REDUCED GAIN	WEAK or INOP			
C15	DRIFT	TIME - CYCLING	" "	MEAS.			
C16	SHORT/OPEN	DEFECT	" "	MEAS			
C17	SHORT	"	FAILURE				
C17	OPEN	"	DE-TUNING	REDUCED SELECTIVITY			
C17	DRIFT	AGING	" "	MEAS			
C18	SHORT/OPEN		SAME AS C15				
C19	SHORT/OPEN	DEFECT	FAILURE				
C19A	OPEN	"	REDUCED GAIN	MEAS.			
C19A	SHORT	"	FAILURE				
C20	SHORT	"	LOSS OF GAIN	SYSTEM WEAK or INOP			
C20	OPEN		FAILURE				
C21	NOT USED						
C22	SHORT	DEFECT	FAILURE				
C22	OPEN	"	REDUCED GAIN	MEAS.			
C23			SAME AS C20				
C24			SAME AS C22				
C25			SAME AS C20				

FAILURE MODE EFFECT ANALYSIS

Sheet 3 of 40

Equip. Nomen. RRC
Equip. Spec. RECEIVER
Equip. Dwg.

Block Diagram (can be put on separate sheet

Date
Revision No.
Prepared by
Approved by

A Item No.	B Assumed Failure	C Possible Causes	D Effects and Consequences	E Method of Detection	F Remarks	G Failure Rate	H Failure Class
C26	SHORT	DEFECT	REDUCED GAIN & LIMITER ACTION	MEAS GAIN, NOISE REJECTION			
C26	OPEN	"	REDUCED LIMITER ACTION	MEAS NOISE REJECTION			
C27	SHORT	"	FAILURE				
C27	OPEN	"	REDUCED GAIN	MEAS,			
C28	SHORT	"	FAILURE				
C28	OPEN	"	REDUCED SELECTIVITY	MEAS.			
C29	SHORT	"	REDUCED GAIN	MEAS			
C29	OPEN	"	FAILURE				
C30	OPEN/SHORT	"	FAILURE				
C31	OPEN/SHORT	"	FAILURE				
C32	SHORT	"	FAILURE				
C32	OPEN	"	REDUCED DISCR. GRADIENT:	PROBABLE FAILURE			
C33	OPEN/SHORT		FAILURE				
C34	OPEN/SHORT		FAILURE				
C35	NOT USED						
C36	SHORT	DEFECT	FAILURE				
C36	OPEN	"	DECREASED SELECTIVITY	MEAS			
C37	OPEN/SHORT	"	FAILURE				
C38	SHORT	"	FAILURE				
C38	OPEN	"	DEC. SEL.	MEAS			

FAILURE MODE EFFECT ANALYSIS

Sheet 4. of 40

Equip. Nomen. RRC
Equip. Spec. RECEIVER
Equip. Dwg.

Block Diagram (can be put on separate sheet

Date
Revision No.
Prepared by
Approved by

A Item No.	B Assumed Failure	C Possible Causes	D Effects and Consequences	E Method of Detection	F Remarks	G Failure Rate	H Failure Class
C 39	OPEN/SHORT		FAILURE				
C 40	OPEN/SHORT		FAILURE				
C41	SHORT		FAILURE				
C41	OPEN		FAILURE				
C42	OPEN/SHORT		FAILURE				
END OF RCVR AUDIO SECTION							
C43	SHORT		FAILURE				
C43	OPEN		OSC FM NOISE	LOSS of S/N (MEAS)			
C44	OPEN/SHORT		FAILURE				
C45	OPEN/SHORT		FAILURE				
C45	DRIFT		OSC DRIFT	MEAS			
C46	OPEN/SHORT		FAILURE				
C46	OPEN	DEFECT	OSCILLATOR NOISE				
C46	SHORT	"	FAILURE				
C47	OPEN/SHORT		FAILURE				
C48	OPEN/SHORT		FAILURE				
C48	DRIFT		OSC. DRIFT				
C49-1	OPEN/SHORT		FAILURE				
C49-1	DRIFT		OSC DRIFT				
C50-1	OPEN/SHORT		FAILURE				

FAILURE MODE EFFECT ANALYSIS

Sheet 5 of 40

Equip. Nomen. RRC
Equip. Spec. RECEIVER
Equip. Dwg.

Block Diagram (can be put on separate sheet

Date
Revision No.
Prepared by
Approved by

A Item No.	B Assumed Failure	C Possible Causes	D Effects and Consequences	E Method of Detection	F Remarks	G Failure Rate	H Failure Class
C 50-1	DRIFT		OSC. DRIFT	FREQ CHECK			
C 51	OPEN/SHORT		FAILURE				
C 52	OPEN/SHORT		FAILURE				
C 52	DRIFT		OSC DRIFT (RCVR)				
C 53	OPEN/SHORT		FAILURE				
C 53	DRIFT		OSC. DRIFT				
C 54			SAME AS C 53				
C 55	OPEN/SHORT		FAILURE				
C 56	OPEN/SHORT		FAILURE				
C 57			SAME AS C 55, 56				
C 58	SHORT		FAILURE				
C 58	OPEN		REDUCED STABILITY MARGIN	POSSIBLE OSCILLATIONS			
C 58	SHORT		FAILURE				
C 59	OPEN		REDUCED S/N	MEAS.			
C 59	SHORT		FAILURE				
C 60			SAME AS C 59				
C61 to C69 inclusive, NOT USED							
	END OF RCVR SECTION						

FAILURE MODE EFFECT ANALYSIS

Sheet 6 of 40

Equip. Nomen. RRC
Equip. Spec. RECEIVER
Equip. Dwg.

Block Diagram (can be put on separate sheet

Date
Revision No.
Prepared by
Approved by

A Item No.	B Assumed Failure	C Possible Causes	D Effects and Consequences	E Method of Detection	F Remarks	G Failure Rate	H Failure Class
R1	OPEN / SHORT		LOSS of Gain & S/N	MEASUREMENT	NOT SERIOUS		
R1	DRIFT		NONE				
R2	OPEN, SHORT		REDUCED GAIN & S/N	MEASUREMENT			
R2	DRIFT		NONE				
R3	OPEN		LARGE GAIN REDUCTION				
R3	SHORT		SMALL GAIN REDUCTION				
R3	DRIFT		NONE				
R4	OPEN		LARGE GAIN REDUCTION				
R4	SHORT		SMALL LOSS of S/N				
R4	DRIFT		NONE				
R5	OPEN		SMALL GAIN CHANGE				
R5	SHORT		FAILURE				
R5	DRIFT		NONE				
R6	OPEN		REDUCED GAIN				
R6	SHORT		FAILURE				
R6	DRIFT		NONE				
R7	OPEN		SMALL GAIN REDUCTION				
R7	SHORT		FAILURE				
R7	DRIFT		NONE				

FAILURE MODE EFFECT ANALYSIS

Sheet 7 of 40

Equip. Nomen. RRC
Equip. Spec. RECEIVER
Equip. Dwg. _____

Block Diagram (can be put on separate sheet

Date _____
Revision No. _____
Prepared by _____
Approved by _____

A Item No.	B Assumed Failure	C Possible Causes	D Effects and Consequences	E Method of Detection	F Remarks	G Failure Rate	H Failure Class
R_8	OPEN		FAILURE				
R_8	SHORT		REDUCED GAIN				
R_8	DRIFT		NONE				
R_9	OPEN		FAILURE				
R_9	SHORT		NONE				
R_{10}	SHORT		REDUCED GAIN				
R_{10}	OPEN		REDUCED GAIN				
R_{10}	DRIFT		NONE				
R_{11}	OPEN		REDUCED GAIN				
R_{11}	SHORT		REDUCED GAIN				
R_{11}	DRIFT		NONE				
R_{12}	OPEN		FAILURE				
R_{12}	SHORT		REDUCED GAIN				
R_{12}	DRIFT		NONE				
R_{13}	OPEN		FAILURE				
R_{13}	SHORT		REDUCED GAIN				

FAILURE MODE EFFECT ANALYSIS

Sheet 8 of 40

Equip. Nomen. RRC
Equip. Spec. RECEIVER
Equip. Dwg.

Block Diagram (can be put on separate sheet

Date
Revision No.
Prepared by
Approved by

A Item No.	B Assumed Failure	C Possible Causes	D Effects and Consequences	E Method of Detection	F Remarks	G Failure Rate	H Failure Class
R_{14}	OPEN		FAILURE				
R_{14}	SHORT		REDUCED GAIN				
R_{14}	DRIFT		NONE				
R_{15}	OPEN		FAILURE				
R_{15}	SHORT		REDUCED GAIN				
R_{15}	DRIFT		NONE				
R_{16}	OPEN		FAILURE				
R_{16}	SHORT		REDUCED GAIN				
R_{16}	DRIFT		NONE				
R_{17}	OPEN		FAILURE				
R_{17}	SHORT		FAILURE				
R_{18}	OPEN/SHORT		REDUCED GAIN				
R_{19}	OPEN/SHORT		FAILURE				
R_{20}	OPEN		FAILURE				
R_{20}	SHORT		REDUCED GAIN & S/N				
R_{20}	DRIFT		NONE				

FAILURE MODE EFFECT ANALYSIS

Sheet 9 of 40

Equip. Nomen. RRC
Equip. Spec. RECEIVER
Equip. Dwg.

Block Diagram (can be put on separate sheet

Date
Revision No.
Prepared by
Approved by

A Item No.	B Assumed Failure	C Possible Causes	D Effects and Consequences	E Method of Detection	F Remarks	G Failure Rate	H Failure Class
R21	OPEN		REDUCED GAIN				
R21	SHORT		FAILURE				
R21	DRIFT		NONE				
R22	OPEN		FAILURE				
R22	SHORT		NONE				
R23	OPEN		FAILURE				
R23	SHORT		NONE				
R24	OPEN/SHORT		FAILURE				
R24	DRIFT		REDUCED NOISE MARGIN				
R25	OPEN/SHORT		FAILURE				
R25	DRIFT		REDUCED NOISE MARGIN				
R26	OPEN		FAILURE				
R26	SHORT		REDUCED NOISE MARGIN				
R26	DRIFT		NONE				
R27	OPEN		NONE				
R27	SHORT		FAILURE				
	DRIFT		NONE				

FAILURE MODE EFFECT ANALYSIS

Sheet 10 of 40

Equip. Nomen. RRC
Equip. Spec. RECEIVER
Equip. Dwg.

Block Diagram (can be put on separate sheet

Date
Revision No.
Prepared by
Approved by

A Item No.	B Assumed Failure	C Possible Causes	D Effects and Consequences	E Method of Detection	F Remarks	G Failure Rate	H Failure Class
R 28	OPEN / SHORT		FAILURE				
R 28	DRIFT		REDUCED NOISE MARGIN				
R 29	OPEN/SHORT		FAILURE				
R 29	DRIFT		REDUCED NOIS MARGIN				
R 30	OPEN/ SHORT		FAILURE				
R 30	DRIFT		REDUCED NOISE MARGIN				
R 31	NOT USED						
R 32	OPEN/SHORT		FAILURE				
R 32	DRIFT		REDUCED NOISE MARGIN				
R33	OPEN /SHORT		FAILURE				
R 33	DRIFT		REDUCED NOISE MARGIN				
R 34	OPEN/SHORT		FAILURE				
R34	DRIFT		REDUCED NOISE MARGIN				
R35	OPEN /SHORT		FAILURE				
R 35	DRIFT		REDUCED NOISE MARGIN				
R36	OPEN		FAILURE				
R36	SHORT		ACCELERATING of TRANSISTORS				

FAILURE MODE EFFECT ANALYSIS

Sheet 11 of 40

Equip. Nomen. RRC
Equip. Spec. RECEIVER
Equip. Dwg.

Block Diagram (can be put on separate sheet

Date
Revision No.
Prepared by
Approved by

A Item No.	B Assumed Failure	C Possible Causes	D Effects and Consequences	E Method of Detection	F Remarks	G Failure Rate	H Failure Class
R 37	OPEN/SHORT		FAILURE				
R 37	DRIFT		REDUCED NOISE MARGIN				
R 38	NOT USED						
R39	OPEN		FAILURE				
R39	SHORT		ACCELERATED AGING OF TRANSISTORS (OUTPUT)				
R40	OPEN		FAILURE				
R40	SHORT		ACCEL. AGING, OUTPUT TRANS.				
R41	NOT USED						
R 63	OPEN/SHORT		FAILURE				
R 63	DRIFT		REDUCED NOISE MARGIN				
R63 A	OPEN		FAILURE		} change		
R 63 A	SHORT		REDUCED NOISE MARGIN				
SQUELCH NOT USED							
END OF RCVR							

FAILURE MODE EFFECT ANALYSIS

Sheet 12 of 40

Equip. Nomen. RRC
Equip. Spec. RECEIVER
Equip. Dwg.

Block Diagram (can be put on separate sheet

Date
Revision No.
Prepared by
Approved by

A Item No.	B Assumed Failure	C Possible Causes	D Effects and Consequences	E Method of Detection	F Remarks	G Failure Rate	H Failure Class
L 1	OPEN / SHORT		FAILURE				
L1	DRIFT		S/N DECREASE				
L2	OPEN		FAILURE				
L2	SHORT		LOSS OF GAIN	SYSTEM WEAR OR DEAD MEAS.			
L2	DRIFT		LOSS of GAIN, S/N				
L3	SHORT		FAILURE				
L3	OPEN		LOSS OF GAIN				
L3	DRIFT		LOSS of GAIN, S/N				
L4	SAME AS L3						
L5	SAME AS L3						
L6	SHORT		FAILURE				
L6	OPEN		LARGE GAIN LOSS				
L6	DRIFT		LOSS of GAIN, S/N				
L7	OPEN / SHORT		FAILURE				
L7	DRIFT		LOSS OF GAIN, S/N				
L8	OPEN / SHORT		FAILURE				
L8	DRIFT		LOSS OF S/N				
L9	OPEN / SHORT		FAILURE				
L9	DRIFT		LOSS OF S/N				

FAILURE MODE EFFECT ANALYSIS

Sheet 13 of 40

Equip. Nomen. RRC
Equip. Spec. RECEIVER
Equip. Dwg.

Block Diagram (can be put on separate sheet

Date
Revision No.
Prepared by
Approved by

A Item No.	B Assumed Failure	C Possible Causes	D Effects and Consequences	E Method of Detection	F Remarks	G Failure Rate	H Failure Class
L 10	OPEN / SHORT		FAILURE				
L10	DRIFT		LOSS OF S/N				
FL1	OPEN / SHORT		FAILURE				
FL1	DRIFT		LOSS of S/N				
FL 2	SAME AS FL1						
FL 3	SAME AS FL1						
T 1	OPEN / SHORT		FAILURE				
T1	DRIFT		LOSS of S/N				
T2	OPEN / SHORT		FAILURE				
T2	DRIFT		LOSS of S/N				
Q1	OPEN		REDUCED GAIN, S/N				
Q1	SHORT		FAILURE				
Q1	WEAK		REDUCED GAIN, S/N				
Q2	OPEN / SHORT		FAILURE				
Q2	WEAK		REDUCED GAIN, S/N				

FAILURE MODE EFFECT ANALYSIS

Sheet 14 of 40

Equip. Nomen. RRC
Equip. Spec. RECEIVER
Equip. Dwg.

Block Diagram (can be put on separate sheet

Date
Revision No.
Prepared by
Approved by

A Item No.	B Assumed Failure	C Possible Causes	D Effects and Consequences	E Method of Detection	F Remarks	G Failure Rate	H Failure Class
Q 3	OPEN/SHORT		FAILURE				
Q 3	WEAK		REDUCED GAIN, S/N				
Q 4	OPEN/SHORT		FAILURE				
Q 5	SAME AS Q4						
Q 6	SAME AS Q4						
Q 7	SHORT		FAILURE				
Q 7	OPEN		LARGE GAIN LOSS, S/N				
Q 7	WEAK		NONE				
Q 8	OPEN/SHORT		FAILURE				
Q 8	WEAK		NONE				
Q 9	OPEN/SHORT		FAILURE				
Q 9	WEAK		NONE				
Q 10	OPEN/SHORT		FAILURE				
Q 10	WEAK		NONE				
Q 11	OPEN/SHORT		FAILURE				
Q 11	WEAK		NONE				
Q 12	OPEN/SHORT		FAILURE				
Q 12	WEAK		NONE				

FAILURE MODE EFFECT ANALYSIS

Sheet 15 of 40

Equip. Nomen. RRC
Equip. Spec. RECEIVER
Equip. Dwg.

Block Diagram (can be put on separate sheet

Date
Revision No.
Prepared by
Approved by

A Item No.	B Assumed Failure	C Possible Causes	D Effects and Consequences	E Method of Detection	F Remarks	G Failure Rate	H Failure Class
Q 13	OPEN/SHORT		FAILURE				
Q 13	WEAK		NONE				
Q 14	OPEN/SHORT		FAILURE				
Q 14	WEAK		NONE				
Q 15	OPEN/SHORT/WEAK		FAILURE				
Q 16	OPEN/SHORT/WEAK		FAILURE				
Q 17	OPEN/SHORT/WEAK		FAILURE				
Q 18 - Q 20	NOT USED						
RX1	INOPERATIVE		FAILURE				
RX1	DRIFT		LOSS of S/N				
X1	INOPERATIVE		FAILURE				
X1	DRIFT		LOSS of S/N				

FAILURE MODE EFFECT ANALYSIS

Sheet 16 of 40

Equip. Nomen. RRC
Equip. Spec. XMTR
Equip. Dwg.

Block Diagram (can be put on separate sheet

Date
Revision No.
Prepared by
Approved by

A Item No.	B Assumed Failure	C Possible Causes	D Effects and Consequences	E Method of Detection	F Remarks	G Failure Rate	H Failure Class
C10-1	OPEN/SHORT		FAILURE	FREQ / S/N MEAS.			
C10-1	DRIFT		LOSS OF S/N				
C71	OPEN/SHORT		FAILURE				
C71	DRIFT		LOSS OF S/N	FREQ / S/N MEAS			
C72	OPEN/SHORT		FAILURE				
C72	DRIFT		LOSS of S/N	FREQ or S/N MEAS			
C73	OPEN/SHORT		FAILURE				
C73	DRIFT		NO EFFECT				
C74	OPEN		INCREASED NOISE				
C74	SHORT		FAILURE				
C74	DRIFT		NO EFFECT				
C101	OPEN/SHORT		FAILURE				
C101	DRIFT		DECREASED POWER				
C102	OPEN/SHORT		FAILURE				
C102	DRIFT		NO EFFECT				
C103	OPEN/SHORT		FAILURE				
C103	DRIFT		REDUCED S/N				
C104	OPEN/SHORT		FAILURE				
C104	DRIFT		NO EFFECT				

FAILURE MODE EFFECT ANALYSIS

Sheet 17 of 40

Equip. Nomen. RRC
Equip. Spec. XMTR
Equip. Dwg.

Block Diagram (can be put on separate sheet

Date
Revision No.
Prepared by
Approved by

A Item No.	B Assumed Failure	C Possible Causes	D Effects and Consequences	E Method of Detection	F Remarks	G Failure Rate	H Failure Class
C 105	OPEN/SHORT		FAILURE				
C105	DRIFT		NO EFFECT				
C106, C107, C108	NOT USED						
C109	OPEN/SHORT		FAILURE				
C110	OPEN/SHORT		FAILURE				
C110	DRIFT		REDUCED POWER OUTPUT				
C111	OPEN		REDUCED POWER OUTPUT				
C111	SHORT		FAILURE				
C111	DRIFT		NO EFFECT				
C111A	OPEN		REDUCED POWER OUT				
C111A	SHORT		FAILURE				
C111A	DRIFT		NO EFFECT				
C112	OPEN/SHORT		FAILURE				
C112	DRIFT		REDUCED POWER OUTPUT				
C113	OPEN/SHORT		FAILURE				
C113	DRIFT		REDUCE POWER OUTPUT				
C114	OPEN/SHORT		FAILURE				
C114	DRIFT		NO EFFECT				
C115	OPEN/SHORT		FAILURE				
C115	DRIFT		REDUCED POWER OUTPUT				
C115A	OPEN		REDUCED POWER OUTPUT				
C115A	SHORT		FAILURE				

FAILURE MODE EFFECT ANALYSIS

Sheet 18 of 40

Equip. Nomen. RRC
Equip. Spec. XMTR
Equip. Dwg.

Block Diagram (can be put on separate sheet

Date
Revision No.
Prepared by
Approved by

A Item No.	B Assumed Failure	C Possible Causes	D Effects and Consequences	E Method of Detection	F Remarks	G Failure Rate	H Failure Class
C116	OPEN		INCREASED NOISE				
C116	SHORT		FAILURE				
C116	DRIFT		NONE				
C117	OPEN /DRIFT		NONE				
C117	SHORT		FAILURE				
C118	OPEN/ DRIFT		NONE				
C118	SHORT		FAILURE				
C119	OPEN		REDUCED POWER OUTPUT				
C119	SHORT		FAILURE				
C119	DRIFT		NONE				
C120	OPEN / SHORT		FAILURE				
C120	DRIFT		REDUCED POWER OUTPUT				
C121	OPEN/SHORT		FAILURE				
C121	DRIFT		REDUCED POWER OUTPUT				
C122	OPEN/SHORT		FAILURE				
C122	DRIFT		REDUCED POWER OUTPUT				
C123	OPEN/SHORT		FAILURE				
C123	DRIFT		REDUCED POWER OUTPUT				
C124	OPEN/SHORT		FAILURE				
C124	DRIFT		NONE				
C125	OPEN/SHORT		FAILURE				
C125	DRIFT		REDUCED POWER OUTPUT				
C125A	NOT USED						

FAILURE MODE EFFECT ANALYSIS

Sheet 19 of 40

Equip. Nomen. RRC
Equip. Spec. XMTR
Equip. Dwg.

Block Diagram (can be put on separate sheet

Date
Revision No.
Prepared by
Approved by

A Item No.	B Assumed Failure	C Possible Causes	D Effects and Consequences	E Method of Detection	F Remarks	G Failure Rate	H Failure Class
C126	OPEN		REDUCED POWER OUT				
C126	SHORT		FAILURE				
C126	DRIFT		NONE				
C127	OPEN		REDUCED POWER OUT				
C127	SHORT		FAILURE				
C127	DRIFT		NONE				
C128	SAME AS C127						
C129	SAME AS C127						
C130	OPEN/SHORT		FAILURE				
C130	DRIFT		REDUCED POWER OUTPUT				
C131	OPEN/SHORT		FAILURE				
C131	DRIFT		REDUCED POWER OUTPUT				
C132	NOT USED						
C133	OPEN/SHORT		FAILURE				
C133	DRIFT		REDUCED POWER OUT				
C134	OPEN/SHORT		FAILURE				
C134	DRIFT		REDUCED POWER OUTPUT				
C134A	SAME AS C134						
C135	OPEN/SHORT		FAILURE				
C135	DRIFT		NONE				
C136	SAME AS C135						
C137	SAME AS C135						

FAILURE MODE EFFECT ANALYSIS

Sheet 20 of 40

Equip. Nomen. RRC
Equip. Spec. XMTR
Equip. Dwg.

Block Diagram (can be put on separate sheet

Date
Revision No.
Prepared by
Approved by

A Item No.	B Assumed Failure	C Possible Causes	D Effects and Consequences	E Method of Detection	F Remarks	G Failure Rate	H Failure Class
C138	NOT USED						
C139	OPEN/SHORT		FAILURE NO EFFECT				
C139	DRIFT						
C140	OPEN/SHORT		FAILURE REDUCED POWER OUTPUT				
C140	DRIFT						
C141	OPEN/SHORT		FAILURE REDUCED POWER OUTPUT				
C141	DRIFT						
C141A	NOT USED						
C142	OPEN/SHORT		FAILURE NO EFFECT				
C142	DRIFT						
C143	OPEN/SHORT		FAILURE				
C144	OPEN/SHORT		FAILURE NO EFFECT				
	DRIFT						
C145	OPEN/SHORT		FAILURE NO EFFECT				
	DRIFT						
C146	OPEN/SHORT		FAILURE				
C146	DRIFT		REDUCED POWER OUTPUT				
C147	OPEN/SHORT		FAILURE				
C147	DRIFT		REDUCED POWER OUTPUT				

FAILURE MODE EFFECT ANALYSIS

Sheet 21 of 40

Equip. Nomen. RRC
Equip. Spec. XMTR
Equip. Dwg.

Block Diagram (can be put on separate sheet

Date
Revision No.
Prepared by
Approved by

A Item No.	B Assumed Failure	C Possible Causes	D Effects and Consequences	E Method of Detection	F Remarks	G Failure Rate	H Failure Class
C148	NOT USED						
C148A	NOT USED						
C149	NOT USED						
C150	NOT USED						
C151	NOT USED						
C152	NOT USED						
C153	NOT USED						
C154	OPEN/SHORT DRIFT		FAILURE REDUCED POWER OUTPUT				
C155	OPEN/SHORT DRIFT		FAILURE REDUCED POWER OUTPUT				
C156 C156A	SAME AS C155						
C157	SHORT OPEN		FAILURE REDUCED STABILITY				
C157A	OPEN SHORT		NEGL FAILURE				
C157B	OPEN SHORT		NEGL FAILURE				
C157C	OPEN SHORT		NEGL FAILURE				
C158	OPEN SHORT		INCREASED NOISE FAILURE				

FAILURE MODE EFFECT ANALYSIS

Sheet 22 of 40

Equip. Nomen. RRC
Equip. Spec. XMTR
Equip. Dwg.

Block Diagram (can be put on separate sheet

Date
Revision No.
Prepared by
Approved by

A Item No.	B Assumed Failure	C Possible Causes	D Effects and Consequences	E Method of Detection	F Remarks	G Failure Rate	H Failure Class
C159	OPEN		INCREASED NOISE				
	SHORT		FAILURE				
C160	OPEN		INCREASED NOISE				
	SHORT		FAILURE				
C175	OPEN		NO EFFECT (REDUCED SPIKE MARGIN)				
	SHORT		FAILURE				
C176	OPEN		NO EFFECT (REDUCED SPIKE MARGIN)				
	SHORT		FAILURE				

FAILURE MODE EFFECT ANALYSIS

Sheet 23 of 40

Equip. Nomen. RRC
Equip. Spec. XMTR
Equip. Dwg.

Block Diagram (can be put on separate sheet

Date
Revision No.
Prepared by
Approved by

A Item No.	B Assumed Failure	C Possible Causes	D Effects and Consequences	E Method of Detection	F Remarks	G Failure Rate	H Failure Class
R64	OPEN/SHORT		FAILURE				
R64	DRIFT		NEGL.				
R65	OPEN/SHORT		FAILURE				
	DRIFT		NEGL				
R66	OPEN/SHORT		FAILURE				
	DRIFT		NEGL.				
R67	OPEN		FAILURE				
	SHORT/DRIFT		NEGL				
R68	OPEN		FAILURE				
	SHORT/DRIFT		UNCERTAIN				
			NEGL				
R69	OPEN/DRIFT		FAILURE				
	SHORT						
R70 THRU R100 — NOT USED							
R101	SHORT/DRIFT		NEGL				
	OPEN		FAILURE				
R102	SHORT/DRIFT		NEGL				
	OPEN		FAILURE				
R103	OPEN/SHORT		FAILURE				
	DRIFT		REDUCED MODULATION				
R104	OPEN/SHORT		FAILURE				
	DRIFT		REDUCED MODULATION				

FAILURE MODE EFFECT ANALYSIS

Sheet 24 of 40

Equip. Nomen. RRC
Equip. Spec. XMTR
Equip. Dwg.

Block Diagram (can be put on separate sheet

Date
Revision No.
Prepared by
Approved by

A Item No.	B Assumed Failure	C Possible Causes	D Effects and Consequences	E Method of Detection	F Remarks	G Failure Rate	H Failure Class
R105	OPEN/SHORT		FAILURE				
	DRIFT		NEGL.				
R106	NOT USED						
R107	OPEN/SHORT		FAILURE				
	DRIFT		REDUCED POWER				
R108	OPEN		FAILURE				
	SHORT/DRIFT		REDUCED POWER				
R109	OPEN		FAILURE				
	SHORT/DRIFT		REDUCED STABILITY				
R110	OPEN		FAILURE				
R110	SHORT/DRIFT		REDUCED POWER				
R107A	OPEN/DRIFT		NEGL				
	SHORT		FAILURE				
R111	OPEN		FAILURE				
	SHORT		REDUCED STABILITY				
R111	DRIFT		NEGL.				
R112	OPEN		FAILURE				
	SHORT		REDUCED POWER				
	DRIFT		NEGL				

FAILURE MODE EFFECT ANALYSIS

Sheet 25 of 40

Equip. Nomen. RRC
Equip. Spec. XMTR
Equip. Dwg.

Block Diagram (can be put on separate sheet

Date
Revision No.
Prepared by
Approved by

A Item No.	B Assumed Failure	C Possible Causes	D Effects and Consequences	E Method of Detection	F Remarks	G Failure Rate	H Failure Class
R113	OPEN		FAILURE				
	SHORT / DRIFT		REDUCED STABILITY				
R113A	OPEN/SHORT		FAILURE				
	DRIFT		REDUCED STABILITY MARGIN				
R114	OPEN/SHORT/DRIFT		REDUCED STABILITY				
R115	OPEN/SHORT/DRIFT		REDUCED STABILITY				
R116	NOT USED						
R117	OPEN		NO PILOT LIGHT				
	SHORT		BURN OUT PILOT LIGHT				
	DRIFT		NEGL.				
R118	OPEN/SHORT		FAILURE				
	DRIFT		NEGL.				

FAILURE MODE EFFECT ANALYSIS

Sheet 26 of 40

Equip. Nomen. RRC
Equip. Spec. MODULATOR
Equip. Dwg.

Block Diagram (can be put on separate sheet

Date
Revision No.
Prepared by
Approved by

A Item No.	B Assumed Failure	C Possible Causes	D Effects and Consequences	E Method of Detection	F Remarks	G Failure Rate	H Failure Class
C162	OPEN/Short		FAILURE				
C162	DRIFT		NEGL.				
C163	OPEN		FAILURE				
C163	SHORT/DRIFT		NEGL				
C164	SHORT		FAILURE				
C164	OPEN/DRIFT		INCREASE SIDE BANDS				
C165	SHORT		FAILURE				
C165	OPEN/DRIFT		INCREASE SIDE BANDS				
C166	SHORT		FAILURE				
C166	OPEN/DRIFT		INCREASE SIDE BANDS				
C167	OPEN/SHORT		FAILURE				
C167	DRIFT		NEGL				
C168	NOT USED						
C169	OPEN/SHORT		FAILURE				
C169	DRIFT		NEGL				
C170	SHORT		FAILURE				
C170	OPEN/DRIFT		INCREASE SIDE BANDS				
C171	NOT USED						
C172	OPEN		FAILURE				
C172	SHORT/DRIFT		REDUCED S/N				

FAILURE MODE EFFECT ANALYSIS

Sheet 27 of 40

Equip. Nomen. MODULATOR
Equip. Spec.
Equip. Dwg.

Block Diagram (can be put on separate sheet

Date
Revision No.
Prepared by
Approved by

A Item No.	B Assumed Failure	C Possible Causes	D Effects and Consequences	E Method of Detection	F Remarks	G Failure Rate	H Failure Class
R 119	OPEN / SHORT		FAILURE	NO MOD.			
R 120	OPEN / SHORT		FAILURE	NO MOD.			
R 121	OPEN/SHORT		FAILURE	NO MOD			
R 122	OPEN		FAILURE	NO MOD.			
R 122	SHORT / DRIFT		INCREASED SIDE BANDS	CHECK MOD. GAIN			
R 123	OPEN		FAILURE	NO MOD.			
R 123	SHORT / DRIFT		INCREASE SIDE BANDS	CHECK MOD. GAIN			
R 124	OPEN		FAILURE	NO MOD			
R 124	SHORT / DRIFT		INCREASE SIDE BANDS	CHECK MOD GAIN			
R 125	OPEN/SHORT		FAILURE	NO MOD			
R 126	SHORT		FAILURE	NO MOD			
R 126	OPEN / DRIFT		INCREASE SIDE BANDS				
R 127	SHORT		FAILURE	NO MOD			
R 127	OPEN/DRIFT		INCREASE SIDE BANDS				
R 128	SHORT		FAILURE				
R 128	OPEN/ DRIFT		INCREASE SIDE BANDS				
R 129	OPEN/SHORT		FAILURE				
R 130	SHORT		FAILURE				
R 130	OPEN / DRIFT		INCREASE SIDE BANDS				
R 131	SHORT		FAILURE				

FAILURE MODE EFFECT ANALYSIS

Sheet 28 of 40

Equip. Nomen. MODULATOR
Equip. Spec.
Equip. Dwg.

Block Diagram (can be put on separate sheet

Date
Revision No.
Prepared by
Approved by

A Item No.	B Assumed Failure	C Possible Causes	D Effects and Consequences	E Method of Detection	F Remarks	G Failure Rate	H Failure Class
R131	OPEN / DRIFT		INCREASE SIDE BANDS	CHECK MOD GAIN			
R131A	SHORT / OPEN		FAILURE	NO MODULATION			
R131A	DRIFT		NEGL	CHECK MOD GAIN			
R132	OPEN		FAILURE	NO MODULATION			
R132	SHORT / DRIFT		INCREASE SIDE BANDS	CHECK MOD. GAIN			
R133	SHORT		FAILURE	NO MODULATION			
R133	OPEN / DRIFT		INCREASE SIDE BANDS	CHECK MOD GAIN			
R134	OPEN		FAILURE	NO MODULATION			
R134	SHORT / DRIFT		INCREASE SIDE BANDS	CHECK MOD GAIN			
Q107	OPEN / SHORT		FAILURE	NO MODULATION			
Q108	OPEN / SHORT		FAILURE	NO MODULATION			
Q109	OPEN / SHORT		FAILURE	NO MODULATION			

FAILURE RATE DATA FORM NO. 0100

ASE Inc.

EQUIPMENT Radio Remote Control DWG NO

ASSEMBLY System Summary DWG NO

SUBASSEMBLY DWG NO REV DATE

REFERENCE DESIGNATION	COMPONENT/PART NUMBER	COMPONENT/PART NAME	Nom. Failure Rate	STRESS RATIO	FAILURE RATE F/10^6 HRS	QTY	FR x QTY	NOTES
		Transceiver	63.3	1.0	63.13	3	190.	
		Digital Processor	41.3	1.0	41.3	3	125.	
		Power Supply, 12V	10.	.5	5.	3	15.	
		Voltage Regulator 5V	10.	.8	8.	3	24.	
		Battery	12.	.08	1.0	3	3.	
		Antenna	10.	1.0	10.	4	40.	
		Control Unit	11.	1.0	11.	1	11.	
		Display Unit	4.4	1.0	4.4	2	8.8	
		Cables, 37 Wire	0					
		Connectors, 37 Wire	.16	1.0	0.16	4	.64	
		"E" Box Interconnections					10.55	
		MTBF = $\frac{10^6}{428}$ = 2340 Hours						

DESIGN ENGINEER PHONE LOCATION TOTAL 428.

RELIABILITY ENGR. PHONE LOCATION

FAILURE RATE DATA FORM NO. 0100

ASE Inc.

EQUIPMENT Radio Remote Control DWG NO

ASSEMBLY Transceiver Components DWG NO

SUBASSEMBLY Summary DWG NO REV DATE

REFERENCE DESIGNATION	COMPONENT/PART NUMBER	COMPONENT/PART NAME	Nom. Failure Rate	STRESS RATIO	FAILURE RATE F/10⁶ HRS	QTY	FR x QTY	NOTES
	Sheet 31	Resistors			2.82	3	8.46	
	32	Resistors			4.0	3	12.0	
	33	Capacitors			3.2	3	9.6	
	34	Capacitors			3.47	3	10.41	
	35	Capacitors, Transistors			8.6	3	25.8	
	36	Crystals, Coils			9.58	3	28.74	
							95.01	
		Factor of 2 to account						
		for commercial quality						
		components					190.02	

DESIGN ENGINEER PHONE LOCATION TOTAL 190.02

RELIABILITY ENGR. PHONE LOCATION

Before Conversion To Hi Rel Components

FAILURE RATE DATA FORM NO. 0100

ASE Inc.

EQUIPMENT R. R. C. DWG NO

ASSEMBLY Trans-Ceiver DWG NO

SUBASSEMBLY Trans-Ceiver Components DWG NO REV DATE 12/12/74

REFERENCE DESIGNATION	COMPONENT/PART NUMBER	COMPONENT/PART NAME	Nom. Failure Rate	STRESS RATIO	FAILURE RATE F/10⁶ HRS		QTY	FR x QTY	NOTES
					x K				
R 36	01-477-331 Mil R-11	Resistor, Fixed, Comp, 4.7 Ω 10%	.014	.50	6	= .042	1	.042	
R 114	01-120-331 Mil R-11	Resistor, Fixed, Comp, 12 Ω "	.014	.50	↑	↑	1	.042	
R 68, 69	01-270-331 - Mil R-11	" " " 27 Ω "	.014	.50			2	.084	
R 45	01-560-331 Mil R-11	" " " 56 Ω "	.014	.50			1	.042	
R9, 108, 109, 111, 113, 116, 117	01-620-331 Mil R-11	" " " 62 Ω "	.014	.50			7	.294	
R38, 54, 67, 112	01-101-331 Mil R-11	" " " 100 Ω "	.014	.050			4	.168	
R110	01-121-331 Mil R-11	" " " 120 Ω "	.014	.50			1	.042	
R 44, 49	01-221-331 Mil R-11	" " " 220 Ω "	.014	.50			2	.084	
R3, 8	01-271-331 Mil R-11	" " " 270 Ω "	.014	.50			2	.084	
R4, 22, 37, 41	01-471-331 Mil R-11	" " " 470 Ω "	.014	.50			4	.168	
R105	01-821-331 Mil R-11	" " " 820 Ω "	.014	.50			1	.042	
R 34, 48, 53, 61, 66, 113A, 120	01-102-331 Mil R-11	" " " 1K Ω "	.014	.50			7	.294	
R 23, 52, 56, 132A	01-152-331 Mil R-11	" " " 1.5K Ω "	.014	.50			4	.168	
R 13, 15, 20, 43, 59, 101, 102, 129	01-222-331 Mil R-11	" " " 2.2K Ω "	.014	.50			8	.336	
R 11, 17, 60	01-332-331 Mil R-11	" " " 3.3K "	.014	.50			3	.126	
R62	01-392-331 Mil R-11	" " " 3.9K "	.014	.50			1	.042	
R 33, 46-1	01-472-331 Mil R-11	" " " 4.7K "	.014	.50			2	.084	
R 9A, 107	01-562-331 Mil R-11	" " " 5.6K "	.014	.50			3	.126	
R 19, 38, 63A	01-682-331 Mil R-11	" " " 6.8K "	.014	.50			3	.126	
R 8A, 26	01-103-331 Mil R-11	" " " 10K "	.014	.50	↓	↓	2	.084	

DESIGN ENGINEER PHONE LOCATION TOTAL 2.82

RELIABILITY ENGR. DHP PHONE LOCATION

Before Conversion to Hi Rel Components

FAILURE RATE DATA FORM NO. 0100

ASE Inc.

EQUIPMENT RRC DWG NO

ASSEMBLY Trans-Ceiver DWG NO

SUBASSEMBLY " " Components DWG NO REV DATE 12/12/74

REFERENCE DESIGNATION	COMPONENT/PART NUMBER	COMPONENT/PART NAME	Nom. Failure Rate	STRESS RATIO	FAILURE RATE F/10⁶ HRS K		QTY	FR x QTY	NOTES
R 28, 64, 122, 123, 127, 130	01-153-331 MIL R-11	Resistor, Fixed, Comp 1/4W 15KΩ 10%	.014	.150	6	.042	6	.252	
R 7	01 223-321 " " "	" " " " 22KΩ "	"	"	"	"	1	.042	
R 121, 125, 132	01-223-331 " " "	" " " " 22K 5%	"	"	"	"	3	.126	
R 5, 24, 25,	01-273-331 " " "	" " " " 27 10%	"	"	"	"	3	.126	
R 1, 27, 32, 35, 51, 63, 126	01-333-331 " " "	" " " " 33 "	"	"	"	"	7	.294	
R 12, 14, 16, 18, 47 50, 124, 128	01-473-331 " " "	" " " " 47 "	"	"	"	"	8	.336	
R 31, 42	01-823-331 " " "	" " " " 82 "	"	"	"	"	2	.084	
131A R 2, 21, 57, 58	01-104-331 " " "	" " " " 100 "	"	"	"	"	5	.210	
R 10, 131	01-154-331 " " "	" " " " 150 "	"	"	"	"	2	.084	
R 6	01-224-321 " " "	" " " " 220 5%	"	"	"	"	1	.042	
R 103, 104	01-474-321 " " "	" " " " 470 10%	"	"	"	"	2	.084	
R 133	01-152-531 " " "	" " " 1/2W 1.5K "	"	"	"	"	1	.042	
R 118	01-221-631 " " "	" " " 1W, 220Ω "	.014	"	"	"	1	.042	
R 39, 40	02-278-221 MIL R 26	" " 1W 1W 27Ω "	.040	"	10	"	2	.800	
R 37	03-104-059A MIL R 94	" Variable, Comp 100K	.110	"	10	"	1	1.10	
R 119	03-103-095 MIL R 94	" " " 10K "	.110	"	1	"	1	.11	
C 52B 122, 130	04-276-001 MIL C 11015	Capacitor, Ceramic Fixed 27PF, 1KV	.085	"	1	"	3	.255	
C 17, 45A	04-396-027 MIL C 11015	" " " 500V NPO 10%	.085	"	1	"	2	.170	
C 12, 57	04-566-028P MIL C 11015	" " " 500V 5.6PF NPO 5%	.085	"	1	"	2	.170	
C 44A, 44B 52 112 133	04 105-027P MIL C 11015	" " " 500V 10PF NPO 10%	.085	"	1	"	5	.425	

DESIGN ENGINEER PHONE LOCATION TOTAL 4.0

RELIABILITY ENGR. DHP PHONE LOCATION

Before Conversion to Hi Rel Components

FAILURE RATE DATA FORM NO. 0100

ASE Inc.

EQUIPMENT R. R. C. DWG NO

ASSEMBLY Trans-Ceiver DWG NO

SUBASSEMBLY Trans-Ceiver Components DWG NO REV DATE 12/12/70

REFERENCE DESIGNATION	COMPONENT/PART NUMBER	COMPONENT/PART NAME	Nom. Failure Rate	STRESS RATIO	FAILURE RATE F/10⁶ HRS	QTY	FR x QTY	NOTES
C45	04-125-019 MIL C 11015	12PF, 1KV, 5% NPO Capacitor, Ceramic, Fixed,	.085	.5	.0425	1		
C115	04-165-027 MIL C 11015	16PF 500V, 10% NPO " " "	.085	.5	↑	1		
C125, 156A	04-185-019 " " "	18PF 1KV 5% NPO " " "	.085	.5		2		
C2, 141	04-255-028 " " "	25PF 500V 5% NPO " " "	.085	.5		2		
C71	04-255-028 " " "	25PF 500V 5% NPO " " "	.085	.5		1		
C155, 156	04-305-027 " " "	30PF 500V 10% NPO " " "	.085	.5		2		
C175	04-505-011 " " "	50PF 1KV, 5% N750	.085	.5		1		
C19A, 28, 47, 51, 157B	04-154-029 " " "	150PF 1KV 10% " " "	.085	.5		5		
C111A, 117, 118, 126, 127, 128, 136, 137, 143, 176	04-224-029 " " "	220PF 1KV, 10% " " "	.085	.5		10		
C3, 4, 20, 23, 25, 29, 101, 124, 139, 154A	04-474-029 " " "	470PF, 1KV, 10% " " "	.085	.5		11		
C164	04-504-029 " " "	500PF, 1KV, 10% " " "	.085	.5		1		
C105	04-684-002 " " "	680PF, 1KV, 10% " " "	.085	.5		1		
C102, 104, 132	04-804-029 " " "	800PF, 1KV, 10% " " "	.085	.5		3		
C35, 40, 62, 63, 102A, 114, 135, 148, 170, 173, 137, 144	04-103-064A " " "	.001 mfd 500V, GMV " " "	.085	.5		11		
C19, 119, 129,	04-203-037P " " "	.002 mfd 500V, 20% " " "	.085	.5		4		
						1		
C14, 16, 34, 38, 55, 56, 65, 116	04-503-003P " " "	.005 mfd 100V, -20+80%	.085	.5		8		
C2, 22, 24, 36, 43, 44, 47, 109, 154A	04-102-033 " " "	.01 mfd 100V, +80-20%	.085	.5	↓	9		
C145	04-101-003 " " "	.01 mfd 100V, +80-20%	.085	.5	.0425	1		

DESIGN ENGINEER PHONE LOCATION

RELIABILITY ENGR. DHP PHONE LOCATION

TOTAL (.0425) x (75) = 3.2

Before Conversion to High Rel Components

FAILURE RATE DATA FORM NO. 0100

ASE Inc.

EQUIPMENT RRC DWG NO

ASSEMBLY TRANS-Receiver DWG NO

SUBASSEMBLY " " Components DWG NO REV DATE 12/12/74

REFERENCE DESIGNATION	COMPONENT/PART NUMBER	COMPONENT/PART NAME	Nom. Failure Rate	STRESS RATIO	FAILURE RATE F/10⁶ HRS	QTY	FR x QTY	NOTES
C6, 9, 11	04-307-007 MIL-C-11015	.30PF, 5% Capacitor, Fixed, Ceramic,	.085	.5	.043	3	.255	
C52A, 103	04-106-007 " " "	1PF, 10% " " "	.085	.5		2	.170	
C 120	04-206-007 " " "	2PF, 10% " " "	.085	.5		1	.043	
C 50-1	04-686-007 " " "	6.8PF, 10% " " "	.085	.5		1	.043	
C 111	05-102-039 MIL C 19978	.01 mf Polycarbonate	.055	.5	.023	1	.023	
C41, 58, 161, 171	05-472-040 " " "	.047 mf " "	.055	.5	.023	4	.092	
C32, 39, 61	05 101 041 " " "	.1 mf " "	.055	.5	.023	3	.069	
C166	05-683 051 " " "	68000 pf	.055	.5		1	.023	
C165	05-274-052 " " "	27000 pf	.055	.5		1	.023	
C162, 169	06-570-106	1mf, 15V, 20%, tantalum	.12	.5	.06	2	.12	
C26, 37, 40, 143	06-530-062	5MF 15V	.12	.5	.06	5	.3	
C69, 172	06-570-103	10mf 15V 20% tantalum	.12	.5	.06	1	.06	
C58, 60	06-530-118	20mf 15V (illinois 22uf, 25V)	1.0	.5	.5	2	1.0	
C158	06-530-064	20mf 15V 47mfd, 15V	.50	.5	.25	1	.25	
C160 ✓	06 530 073	500mf 15V C3B 470	.50	.5	.25	1	.25	
C157	06 130 107	500mf 15V	1.0	.5	.5	1	.5	
C159 ✓	06 530 119	1000mf 15V	.50	.5	.25	1	.25	

DESIGN ENGINEER PHONE LOCATION TOTAL 3.471

RELIABILITY ENGR. DHP PHONE LOCATION

Before Conversion to High Rel Component

FAILURE RATE DATA FORM NO. 0100

ASE Inc.

EQUIPMENT R.R.C. DWG NO

ASSEMBLY trans-Ceiver. DWG NO

SUBASSEMBLY " " Components DWG NO REV DATE

REFERENCE DESIGNATION	COMPONENT/PART NUMBER	COMPONENT/PART NAME	Nom. Failure Rate	STRESS RATIO	FAILURE RATE F/10^6 HRS K		QTY	FR x QTY	NOTES
C134, 151	07-205-002A MIL-C-5	20PF, 500V, 10% Capacitor, Fixed, Dur mica.	.1	.5	2	.1	2	.2	
C15, 18	07-505-007 MIL C-5	" " " 300V, 5% 50PF	.1	↑	2	.1	2	.2	
C54	07-104-002A MIL-C-5	" " " 10% 100PF 500V	.1		2	.1	1	.2	
C73	07-104-009A MIL-C-5	" " " 5% 100PF 100V	.1		2	.1	1	.1	
C148	07-124-002A MIL-C-5	" " " 10% 120PF 500V.	.1		2	.1	1	.1	
C72	07-154-009A MIL-C-5.	" " " 5% 150PF 100V	.1		2	.1	1	.1	
C31, 142A, 148A	07-254-008A MIL-C-5	" " " 5% 250PF 100V	.1		2	.1	3	.3	
C33, 53	07-404-002 MIL C-5,	" " " 10% 400PF 500V,	.1		2	.1	2	.2	
C30	07-804-009A MIL C 5	" " " 5% 800PF 100V	.1	↓	2	.1	1	.1	
C49-1, 70-1, 140	09-310-033 MIL-C-81	1.7 to 10PF Capacitor Variable, Ceramic	.2	.5	1	.2	3	.6	
C147	09-210-041 —	16 to 150PF Capacitor Variable, Compression	1.0	1.0	1	1.0	1	1.0	
C146	09-210-031	50 to 300PF " " "	1.0	1.0	1	1.0	1	1.0	
Q16	19-020-048	TRANSISTOR RCA-40235/38246	.3	1.0	1	.3	1	.3	
Q1, 2	19-020-099	" " 40673	.3	↑	↑	↑	2	.6	
Q3, 8, 15, 17, 21	19-020-126	" SUPAR 398	.3				5	1.5	
Q12	19-020-100	" RCA 2N4037/61244	.3				1	.3	
Q14	19-020-102	" RCA TA7741/61239	.3				1	.3	
Q13	19-020-101	" RCA-TA2911/61242	.3				1	.3	
Q101, 102, 103	19-020-067	" RCA 40637/61317	.3	↓	↓	↓	3	.9	
Q104	19-020-096	" RCA 2N5913/61323	.3	1.0	1	.3	1	.3	

DESIGN ENGINEER PHONE LOCATION TOTAL 8.6

RELIABILITY ENGR. DHP PHONE LOCATION

FAILURE RATE DATA FORM NO. 0100

ASE Inc.

EQUIPMENT RRC DWG NO

ASSEMBLY TRANSCEIVER DWG NO

SUBASSEMBLY DWG NO REV DATE

REFERENCE DESIGNATION	COMPONENT/PART NUMBER	COMPONENT/PART NAME	Nom. Failure Rate	STRESS RATIO	FAILURE RATE F/10⁶ HRS	QTY	FR x QTY	NOTES
TX1		QUARTZ CRYSTAL	.02	1.0		1	.02	
RX1		"	.02	1.0		1	.02	
X1		"	.02	1.0		1	.02	
L1 - L10		COIL	.3			10	3.0	
FL1, FL2		CRYSTAL FILTER	.06			2	.12	
FL3		CERAMIC FILTER	.1			1	.10	
T101		RF TRANSFORMER	.3	1.0		1	.30	
T102		"	.3	1.0		1	.30	
L101 - 105		COIL	.3			5	1.50	
L107 - 109		"	.3			3	.90	
L112 - 115		"	.3			4	1.20	
RFC1 - RFC7		CHOKE, R.F.	.3			7	2.10	

DESIGN ENGINEER PHONE LOCATION TOTAL 9.58

RELIABILITY ENGR. PHONE LOCATION

FAILURE RATE DATA FORM NO. 0100

ASE Inc.

EQUIPMENT RADIO REMOTE CONTROL DWG NO

ASSEMBLY DIGITAL PROCESSOR DWG NO

SUBASSEMBLY DWG NO REV DATE

REFERENCE DESIGNATION	COMPONENT/PART NUMBER	COMPONENT/PART NAME	Nom. Failure Rate	STRESS RATIO	FAILURE RATE F/10⁶ HRS	QTY	FR x QTY	NOTES
		SEMICONDUCTOR D.I.P.'s	.4	1.0	0.4	100	40.	
		CRYSTAL	.02	1.0	.02	1	0.02	
		RESISTOR	.01	1.0	.01	12	0.12	
		DIODE	.4	1.5	.6	2	1.2	
		TANTALYTIC CAP	.06	1.0	.06	4	0.24	
		MICA CAPACITORS	.001	1.0	.001	43	0.04	
							41.6	

DESIGN ENGINEER PHONE LOCATION TOTAL

RELIABILITY ENGR. PHONE LOCATION

FAILURE RATE DATA FORM NO. 0100

ASE Inc.

EQUIPMENT RADIO REMOTE CONTROL DWG NO

ASSEMBLY "E" BOX INTERCONNECTIONS DWG NO

SUBASSEMBLY DWG NO REV DATE

REFERENCE DESIGNATION	COMPONENT/PART NUMBER	COMPONENT/PART NAME	Nom. Failure Rate	STRESS RATIO	FAILURE RATE F/10⁶ HRS	QTY	FR x QTY	NOTES
	A2 J1	POWER CONN. 9 PIN	.03	1.0	.03	3	.09	
	A2 J2	" " 9 PIN	.03	1.0	.03	3	.09	
	A2 J3	SPARE 9 PIN	.03	1.0	.03	—		
	A3 A1 J1	BOARD 1 CONN 120 PIN	1.0	1.0	1.0	3	3.	
	A3 A2 J1	BOARD 2 CONN 120 PIN	1.0	1.0	1.0	3	3.	
	A3 A3 J1	BOARD 3/4 CONN 120 PIN	1.0	1.0	1.0	3	3.	
	A4 J1	POWER 9 PIN	.03	1.0	.03	3	.09	
	A4 J2	DATA 15 PIN	.04	1.0	.04	3	.12	
	A4 J3	ANT. COAX	.01	1.0	.01	3	.03	
	A6 J1	BATT 3 PIN	.02	1.0	.02	3	.06	
	J1	BATT 3 PIN	.02	1.0	.02	3	.06	
	J1A	ANT COAX	.01	1.0	.01	3	.03	
	J1B	ANT COAX	.01	1.0	.01	2	.02	
	J4	CONTROL/DSP 37 PIN	.16	1.0	.16	3	.48	
	J5	CONTROL/DSP 37 PIN	.16	1.0	.16	3	.48	

DESIGN ENGINEER PHONE LOCATION TOTAL 10.55

RELIABILITY ENGR. PHONE LOCATION

FAILURE RATE DATA FORM NO. 0100

ASE Inc.

EQUIPMENT RRC DWG NO

ASSEMBLY CENTRAL CONTROL AND DISPLAY DWG NO

SUBASSEMBLY DWG NO REV DATE

REFERENCE DESIGNATION	COMPONENT/PART NUMBER	COMPONENT/PART NAME	Nom. Failure Rate	STRESS RATIO	FAILURE RATE F/10^6 HRS	QTY	FR x QTY	NOTES
		LED	1.0	.2	.2	25	5.0	
		SWITCH, TOGGLE	.1	1.	.1	18	1.8	
		RESISTOR	.014	.5	.007	25	.175	
		SOCKET	.1	1.0	.1	25	2.5	
		CONNECTOR	0.7	1.0	.7	2	1.4	
		SWITCH, ROTARY	.02	1.0	.02	2	.04	

DESIGN ENGINEER PHONE LOCATION TOTAL 11.00

RELIABILITY ENGR. PHONE LOCATION

FAILURE RATE DATA FORM NO. 0100

ASE Inc.

EQUIPMENT RRC DWG NO

ASSEMBLY REMOTE DISPLAY DWG NO

SUBASSEMBLY DWG NO REV DATE

REFERENCE DESIGNATION	COMPONENT/PART NUMBER	COMPONENT/PART NAME	Nom. Failure Rate	STRESS RATIO	FAILURE RATE F/10^6 HRS	QTY	FR x QTY	NOTES
		LED	1.0	.2	.2	12	2.4	
		SOCKET	.1	1.0	.1	12	1.2	
		RESISTOR	.014	.5	.007	12	0.08	
		CONNECTOR	0.7	1.0	0.7	1	0.7	

DESIGN ENGINEER PHONE LOCATION TOTAL 4.4

RELIABILITY ENGR. PHONE LOCATION

GPO 908-705