Report No. FAA-RD-76-53

NA-75-47

COPY 2

FAA WJH Technical Center
00090278

EVALUATION OF THE MODIFIED NAS EN ROUTE STAGE A MODEL 3D WEATHER AND FIXED MAP UNIT

NAFEC
LIBRARY
MAY 6 '76

Robert W. Delaney

MARCH 1976

FINAL REPORT

Document is available to the public through the
National Technical Information Service
Springfield, Virginia 22151

Prepared for

U. S. DEPARTMENT OF TRANSPORTATION
FEDERAL AVIATION ADMINISTRATION
Systems Research & Development Service
Washington, D.C. 20590

NOTICE

This document is disseminated under the sponsorship of the Department of Transportation in the interest of information exchange. The United States Government assumes no liability for its contents or use thereof.

Technical Report Documentation Page

1. Report No. FAA-RD-76-53	2. Government Accession No.	3. Recipient's Catalog No.
4. Title and Subtitle EVALUATION OF THE MODIFIED NAS EN ROUTE STAGE A MODEL 3D WEATHER AND FIXED MAP UNIT		5. Report Date March 1976
		6. Performing Organization Code
7. Author(s) Robert W. Delaney		8. Performing Organization Report No. FAA-NA-75-47
9. Performing Organization Name and Address Federal Aviation Administration National Aviation Facilities Experimental Center Atlantic City, New Jersey 08405		10. Work Unit No. (TRAIS)
		11. Contract or Grant No. 121-107-040
12. Sponsoring Agency Name and Address U.S. Department of Transportation Federal Aviation Administration Systems Research and Development Service Washington, D.C. 20590		13. Type of Report and Period Covered Final September 1974 - July 1975
		14. Sponsoring Agency Code
15. Supplementary Notes		

16. Abstract A number of changes were requested by Air Traffic Service to improve the operational performance of the National Airspace System (NAS) En Route Stage A Model 3D Weather Subsystem, the basic element of which is the Weather and Fixed-Map Unit (WFMU). The essential changes included an increase in the WFMU weather-processing range to 200 miles, an improvement in the azimuth resolution of weather contour presentation; and provision for finer threshold adjustments for display of weather contours at different attenuation levels. Several technical and operational tests were performed at Elwood, New Jersey, and at field sites to assure WFMU interface with radar modification equipment, Common Digitizer (CD), and computer software. Development of design changes was introduced to optimize the weather subsystem effectiveness. These design changes included the elimination of aircraft breakthrough by inhibiting strong aircraft returns displayed as weather contours, provision of moving target indicator (MTI)-log video to the WFMU for improvement in weather contouring when in the MTI mode, and added controls and alignment procedures for reliable WFMU performance. It was concluded that the WFMU was capable of generating reliable contours around weather clutter and was not affected by aircraft signals. Effective control of weather map data rates was accomplished by a new selectable WFMU azimuth resolution design and by a weather discrimination feature in the CD. It is recommended that the WFMU low intensity and high intensity attenuation threshold levels be selected, to 12 and 24 dB respectively, for determining contours representative of circular polarization punch through and for establishing an area where moderate turbulence may be encountered.

17. Key Words Weather Display Systems Meteorological Radar Data Processing Systems All-Weather Aviation	18. Distribution Statement Document is available to the public through the National Technical Information Service, Springfield, Virginia 22151

19. Security Classif. (of this report)	20. Security Classif. (of this page)	21. No. of Pages	22. Price
Unclassified	Unclassified	64	

Form DOT F 1700.7 (8-72) Reproduction of completed page authorized

PREFACE

Grateful acknowledgement is made to Mr. Marcos Costilla for his assistance in the development of the new WFMU modifications, and to Mr. G. Cline for his support in the testing of the preproduction WFMU at the White House field site and at the Jacksonville Center.

TABLE OF CONTENTS

	Page
INTRODUCTION	1
Purpose	1
Background	1
Weather Subsystem Description	2
New Features of WFMU-200	2
Radar-WFMU-CD Interface	22
Theory of Operation	22
DISCUSSION	22
General Description of Test Methods and Results	22
SUMMARY OF RESULTS	29
CONCLUSIONS	30
RECOMMENDATIONS	31
APPENDIXES	
A - Data Rates	
B - Modified Radar Interface/WFMU MTI Channel	
C - Log and MTI-Log Alignment Procedures	
D - MTI AGC Regulation	
GLOSSARY	

LIST OF ILLUSTRATIONS

Figure		Page
1	Radar Weather Subsystem	3
2	WFMU General Block Diagram	4
3	Logic Diagram Showing Change in WFMU Memory	5
4	Modification to 16-Mile Noise Sampling Gate	7
5	WFMU-200 Azimuth Transmission Interval Over a Three-Scan Period	9
6	Display of WFMU-200 Azimuth Resolution Pattern	10
7	Weather and Fixed-Map Unit	11
8	Modification of Full Weather Display During Nontransmit Time	12
9	Threshold Offset for Clutter Estimate/Weather Output Correlation	14
10	Integration Modification of A/D Conversion and Clutter Estimate Circuits	15
11	Internal/External Video Crossover Modification	16
12	WFMU Internal Controls	17
13	Maintenance Rapid Clutter Estimate Modification	19
14	Modified Test Video Function of Video Processing Group	20
15	Aircraft Eliminator Block Diagram	21
16	WFMU External Interfaces	23
17	Sample Computer Printout of WFMU-200 Test Wedges	25
B-1	Modification of WFMU MTI Video Processing Group	B-3

LIST OF TABLES

Table		Page
1	WFMU Report Azimuths at Various Range Intervals	8
2	WFMU Threshold Measurements	26
A-1	Weather Message Rate Per Scan	A-2
A-2	Data Rate Range Filtering Computation for WFMU-200 Azimuth Resolution (Outer Contour)	A-3
A-3	Data Rate Range Filtering Computation for WFMU-200 Azimuth Resolution (Inner Contour)	A-4
C-1	Log Scaling	C-2
C-2	MTI-Log Scaling	C-4
D-1	Summary of MTI Clutter Estimate Accuracy Measurements (Elwood Modified WFMU)	D-2
D-2	Summary of MTI Clutter Estimate Accuracy Measurements (White House Modified WFMU)	D-3

INTRODUCTION

PURPOSE.

The purpose of this project was to determine the technical performance of the modified Weather and Fixed-Map Unit (WFMU), FA-8172, interfaced with the Common Digitizer (CD), and to assess the modified WFMU's impact on the National Airspace System (NAS) En Route Stage A Model 3d2 Weather Subsystem.

BACKGROUND.

The basic element of the NAS En Route Weather Subsystem is the WFMU. Tasker Systems, a division of Whittaker Corporation, designed and built 119 of these units (contract DOT-FA69NS-167) which were deployed to designated Federal Aviation Administration (FAA), or joint FAA/military field facilities, collocated with CD equipment. A general description and technical performance of the initial WFMU evaluation was presented in Report No. FAA-RD-72-52 dated June 1972. Based on some necessary design improvements and a request from the FAA's Air Traffic Service to extend the WFMU range from 128 to 200 miles (modified unit now identified as WFMU-200), a revised modification 14 under the indicated contract was initiated.

Two preliminary production models of the WFMU-200 were delivered to Elwood, N.J., and White House, Fla., for initial weather subsystem testing. The first six features of the 10 design change improvements listed below formed the basis for this initial testing. Results of the Elwood and White House testing were satisfactory but it was recommended by the test team (comprised of representatives of Airway Facilities, System Research and Development, and the National Aviation Facilities Experimental Center (NAFEC) personnel) that further improvement in the WFMU-200 design be implemented to achieve operational performance superior to the weather information presented on broadband displays.

The contractor, in conjunction with the Airway Facilities and NAFEC personnel, conducted experimental testing and implemented design changes at the Elwood facility during February and March 1975. These WFMU-200 design improvements were not considered final. The design improvements which were agreed to by the indicated organizations on March 27, 1975, are listed below:

1. An increase in WFMU range to 200 nautical miles (nmi)

2. A WFMU azimuth resolution modification

3. WFMU threshold setting modifications

4. A WFMU video crossover modification

5. Independent circular polarization/moving target indicator (CP/MTI) compensation controls

6. An MTI automatic gain control (AGC) regulation

7. A rapid update of clutter estimate

8. WFMU-200 scaling

9. A conversion of MTI video to MTI-log video

10. Aircraft breakthrough.

NOTE: Items 7 through 10 were newly-developed design improvements.

WEATHER SUBSYSTEM DESCRIPTION.

A description of the weather subsystem (figure 1) and the interface of the WFMU with the CD (figure 2) is given in report No. FAA-RD-72-52. Only those changes effected by the final design of the WFMU-200 will be presented in this report. A description of these changes and new design features are presented in a following paragraph entitled "New Features of WFMU-200."

NEW FEATURES OF WFMU-200. New features and design changes to the original WFMU, which will be incorporated in the WFMU-200, are presented herein. Details of these changes, in the form of logic or schematic diagram, are referenced in this report.

Increase in WFMU Range to 200 nmi. An increase in range from 128 to 200 nmi effected changes in the memory (figure 3), sensitivity in range compensation (SRC) curve timing, 16-mile noise sample gate (figure 4), weather map program timing, and maintenance aids to the WFMU. This change was requested by air traffic service personnel NAS Change Proposal (NCP 3146) to match the weather coverage provided on the present broadband system.

WFMU Azimuth Resolution Modification. The WFMU azimuth resolution modification effected changes in counting, timing, and decoding logic design to gate four WFMU transmission interval signals in a balanced long- and short-range pattern while maintaining the three-scan interleave feature (refer to table 1, and figures 5 and 6). This change was required to minimize the degradation in contour resolution as a function of range. The WFMU front panel OUTPUT RESOLUTION switches were changed from OFF-LOW-MDM-HIGH to select OFF-LOW-HIGH as shown in figure 7. The enhancement of the weather fidelity at the extended ranges added little or no increase in data rates, and in most cases reduced data rates as discussed in appendix A.

In addition, to permit maintenance personnel to observe the presentation of a test wedge or a full-weather contour on the CD indicator (plan position indicator (PPI) mode, during nontransmit time) when the weather messages are being processed by the center, a change was instituted in the WFMU WEA MAP XMT/WEA CTR DATA logic shown in figure 8.

WFMU Threshold Setting Modifications. The modifications of the WFMU threshold settings consist of 10 3-decibel (dB) step changes in the resistor

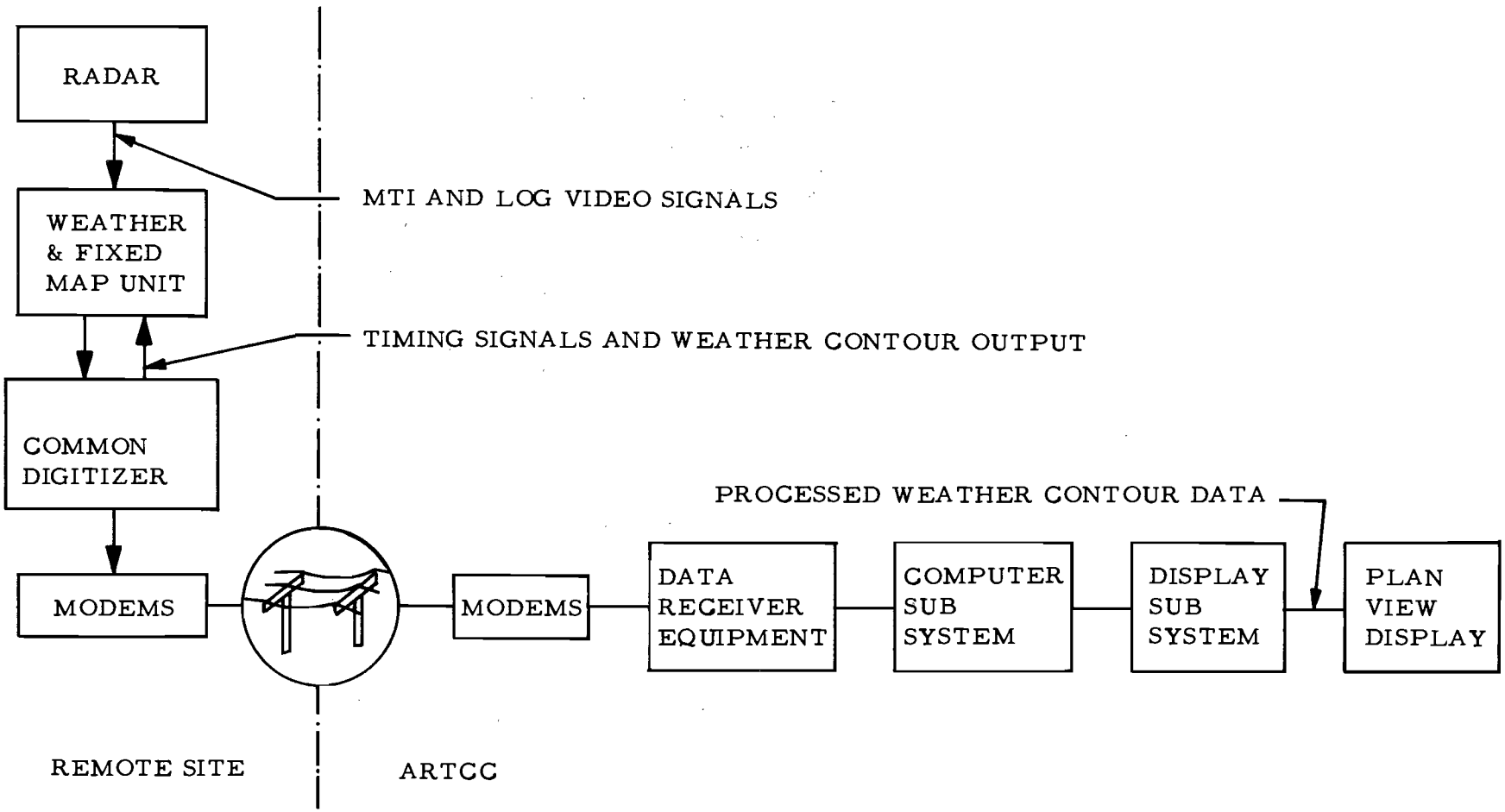

FIGURE 1. RADAR WEATHER SUBSYTEM

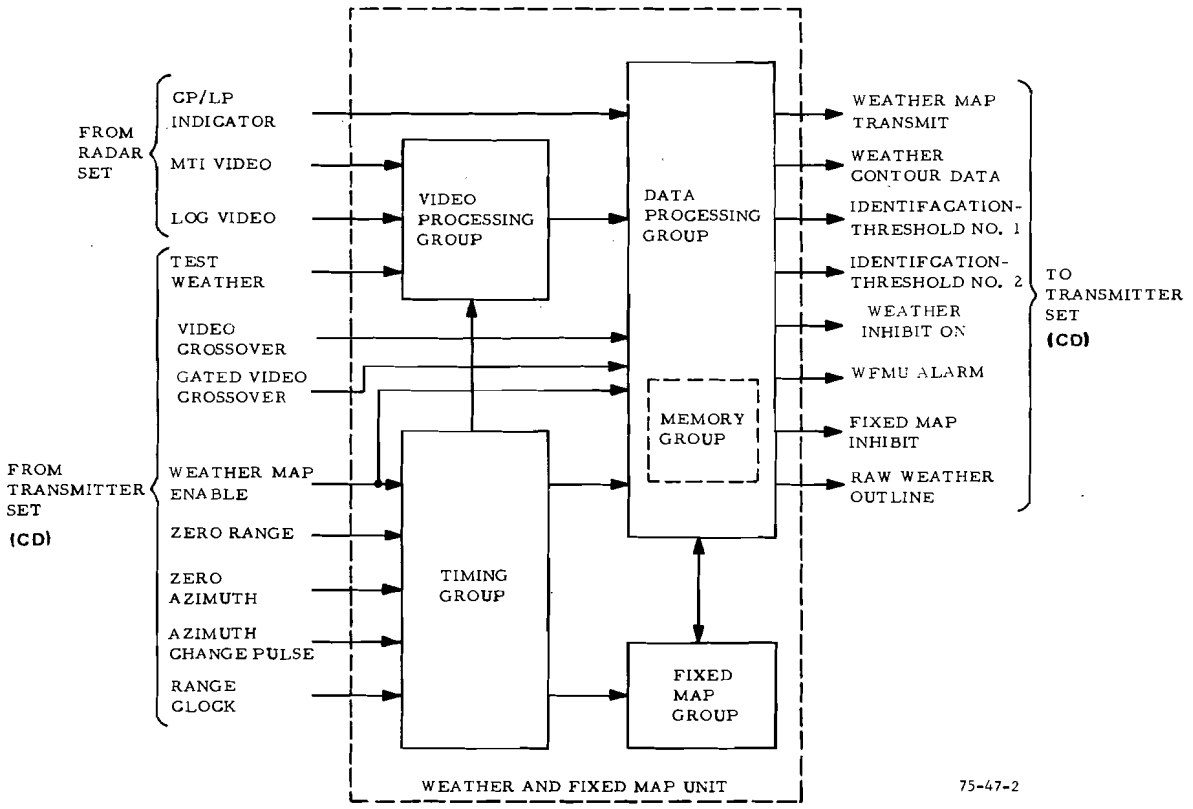

FIGURE 2. WFMU GENERAL BLOCK DIAGRAM

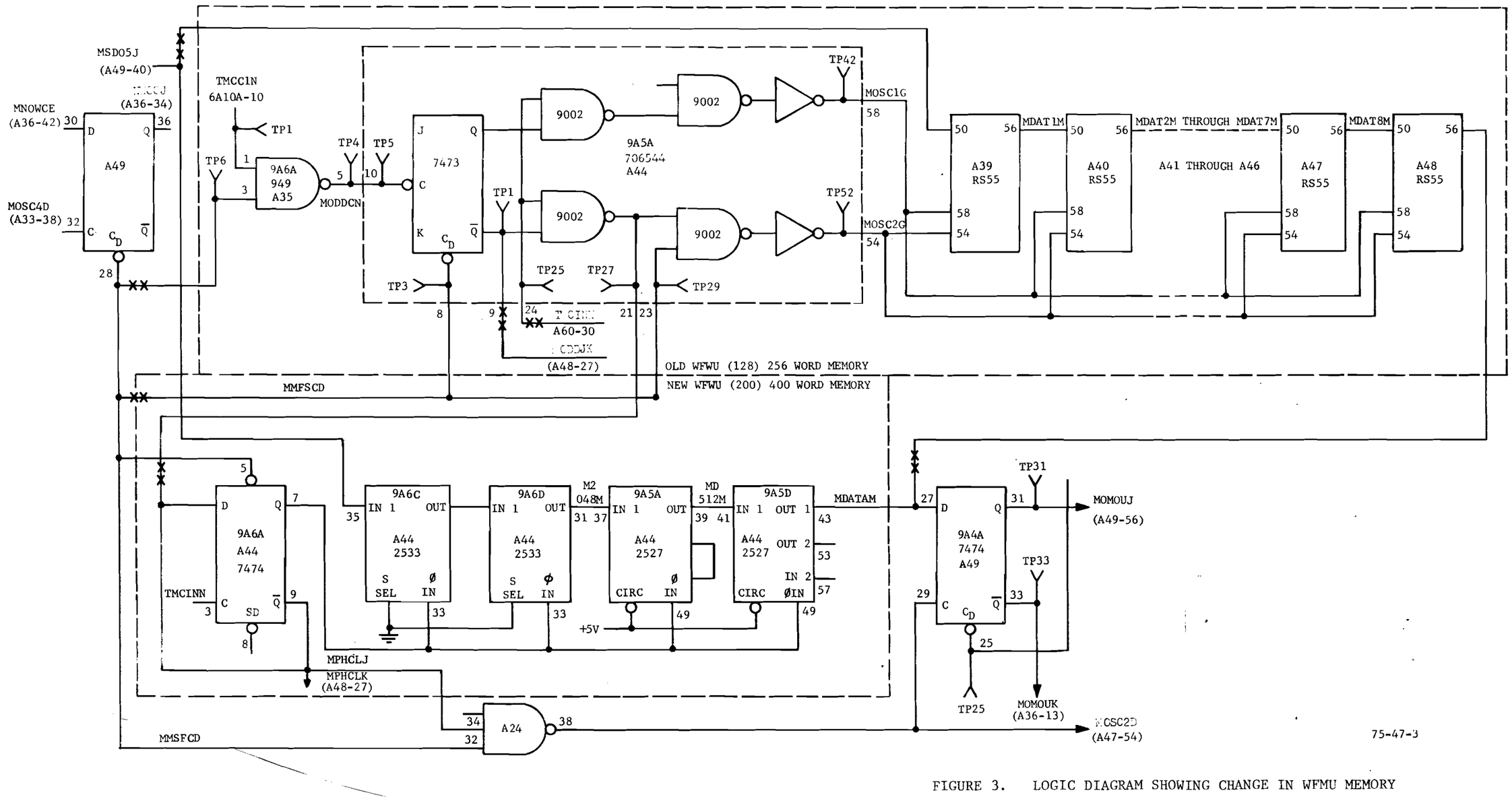

FIGURE 3. LOGIC DIAGRAM SHOWING CHANGE IN WFMU MEMORY

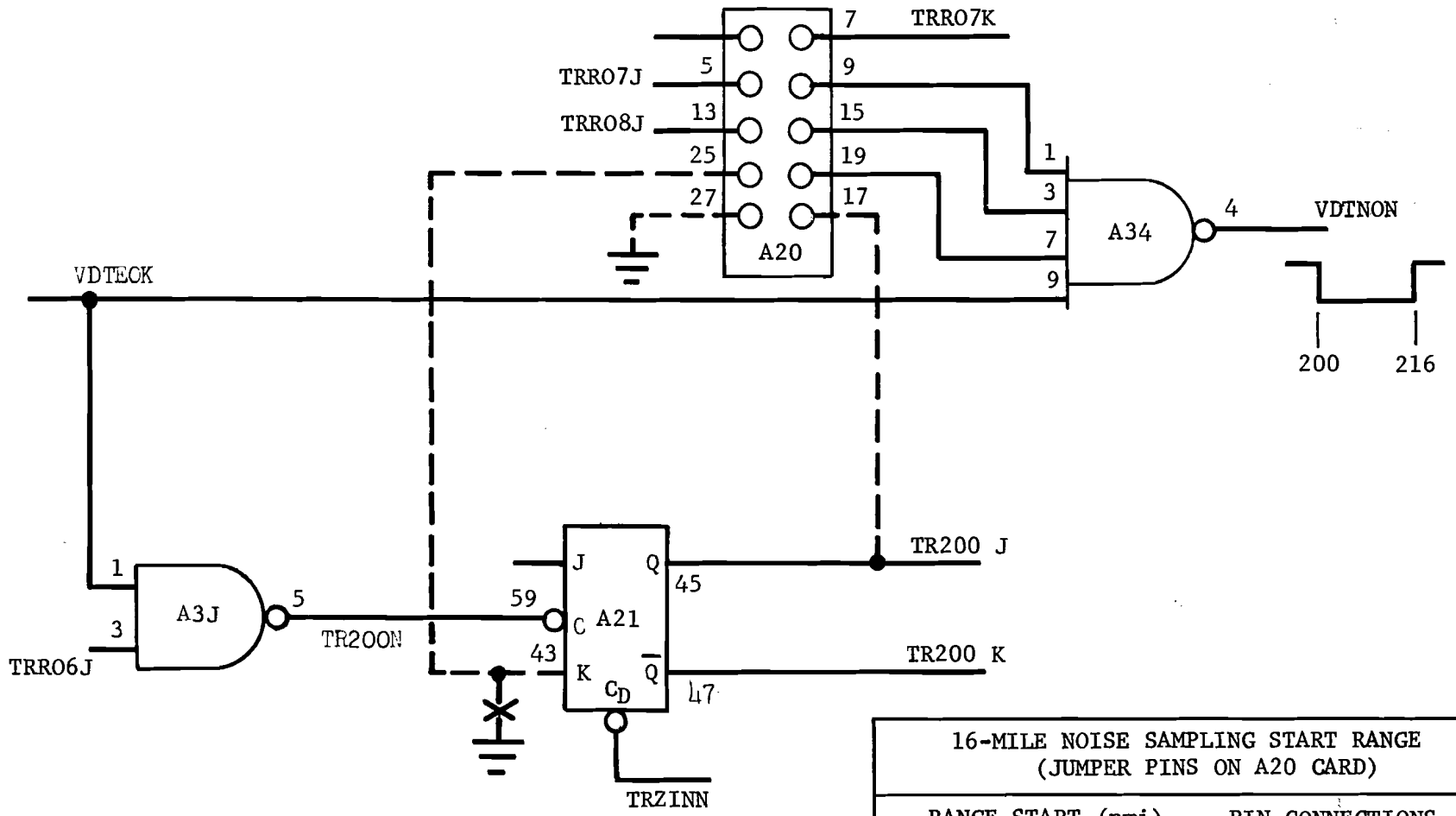

16-MILE NOISE SAMPLING START RANGE (JUMPER PINS ON A20 CARD)	
RANGE START (nmi)	PIN CONNECTIONS
200	17-19
208	5-9, 25-27
224	7-9, 13-15, 25-27
240	5-9, 13-15, 25-27

75-47-4

FIGURE 4. MODIFICATION TO 16-MILE NOISE SAMPLING GATE

TABLE 1. WFMU REPORT AZIMUTHS AT VARIOUS RANGE INTERVALS

Output Resolution	Max Truncated Radial (nmi)	Azimuth WFMU Transmission (ACP's)	(deg)	Azimuth ARTCC Display (ACP's)	(deg)
High	0-200	96	8.4	32	2.8
High	40-200	96	8.4	32	2.8
High	80-200	48	4.2	16	1.4
High	136-200	24	2.1	8	0.7
High	Adjacent	12	1.05	4	0.35
Low	0-200	192	16.8	64	5.6
Low	40-200	192	16.8	64	5.6
Low	80-200	96	8.4	32	2.8
Low	136-200	48	4.2	16	1.4
Low	Adjacent	24	2.1	8	0.7

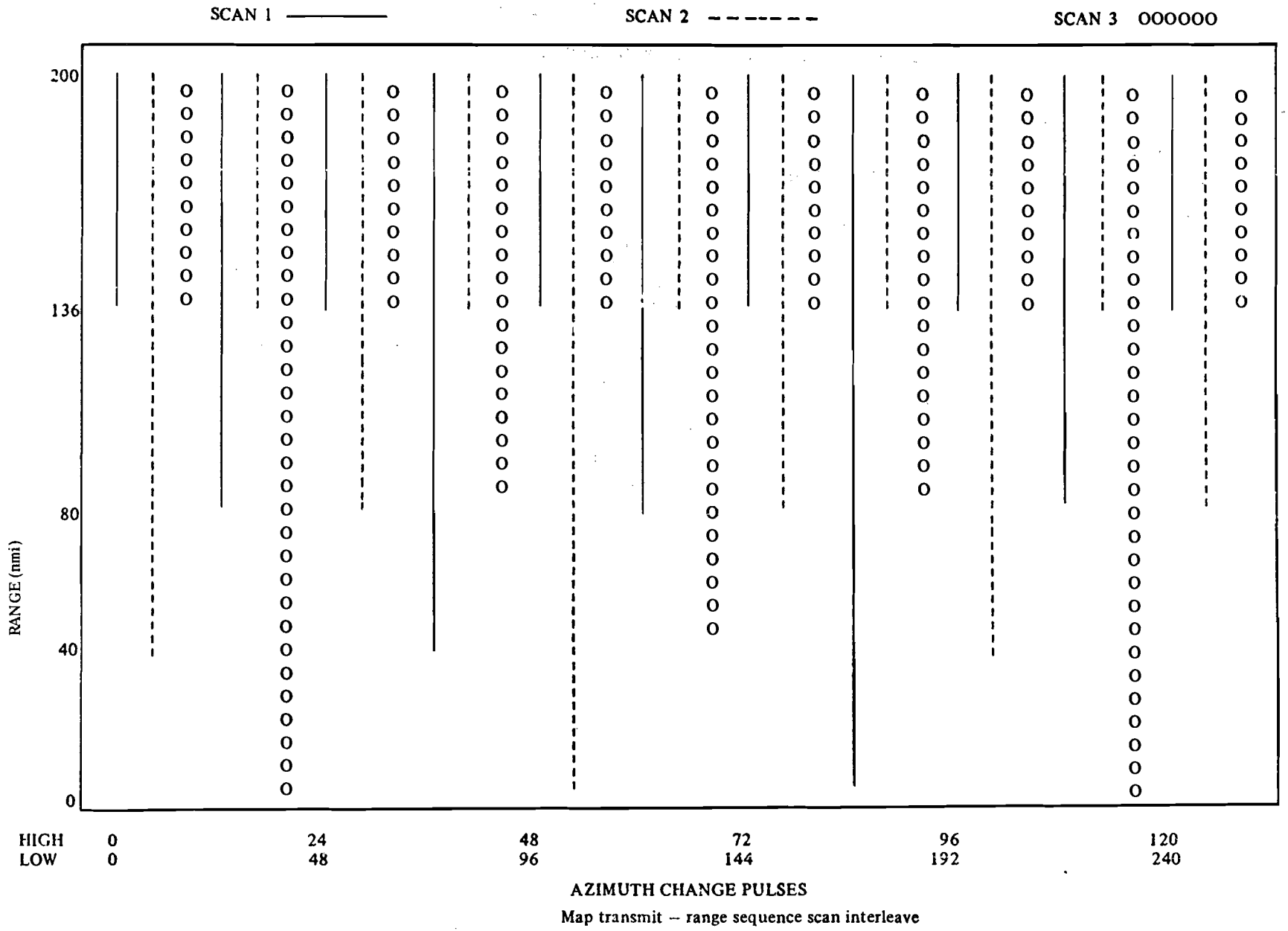

FIGURE 5. WFMU-200 AZIMUTH TRANSMISSION INTERVAL OVER A THREE-SCAN PERIOD

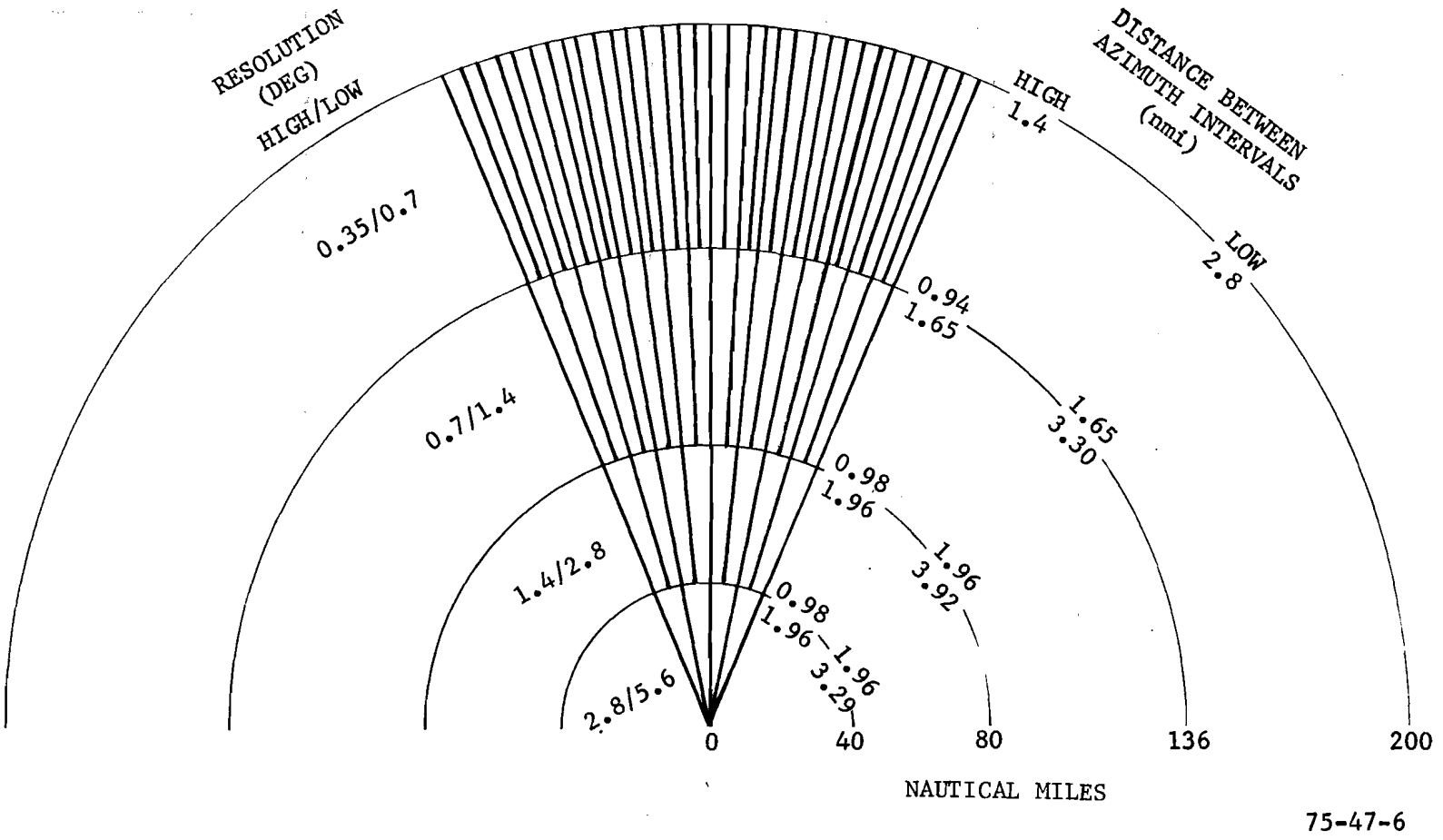

FIGURE 6. DISPLAY OF WFMU-200 AZIMUTH RESOLUTION PATTERN

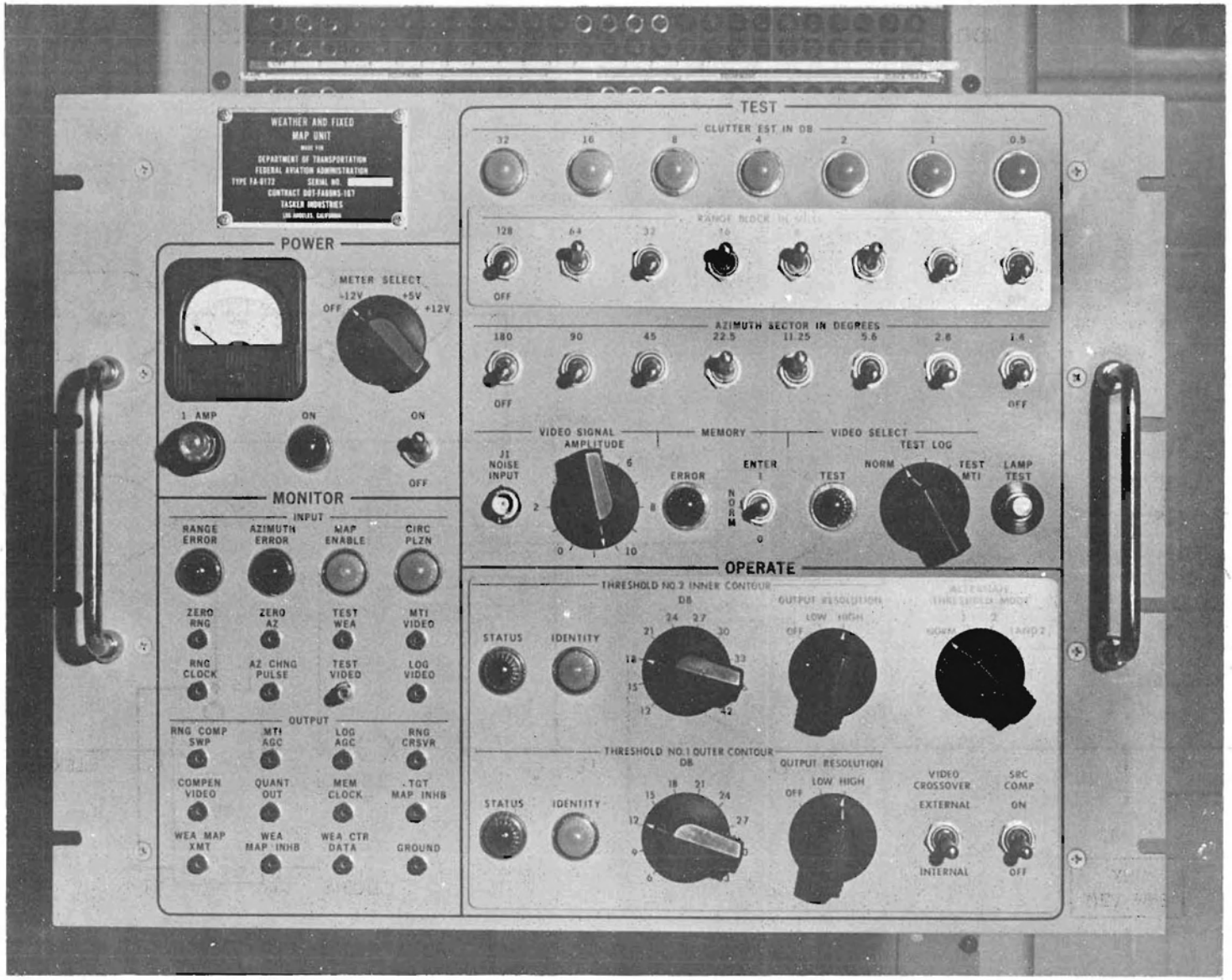

FIGURE 7. WEATHER AND FIXED-MAP UNIT

FAA WJH Technical Center
00090278

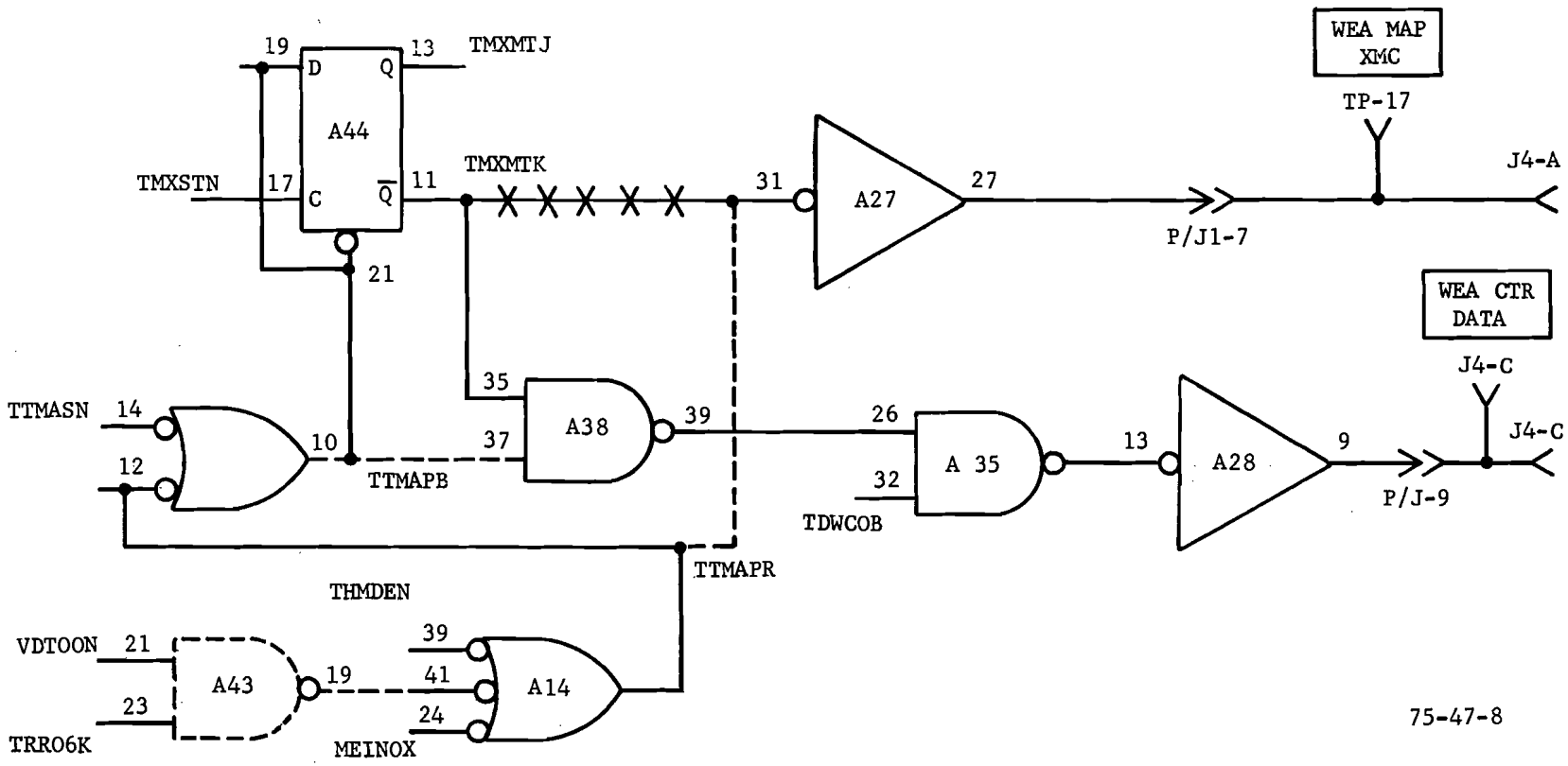

FIGURE 8. MODIFICATION OF FULL WEATHER DISPLAY DURING NONTRANSMIT TIME

ladder network of the outer and inner thresholds. The outer threshold varies from 6 to 33 dB, while the inner threshold varies from 12 to 36 dB with a maximum threshold attenuation of 42 dB (see threshold contour switches of figure 7). This change was requested by air traffic service personnel to provide finer variations in displayed weather contours.

The threshold circuitry was further improved by provision of a 1.5-dB offset resistor network (figure 9) to assure that weather data would not be reduced in signal strength due to processing in the WFMU. This offset value was determined by comparison of the reference attenuation of a test radiofrequency (RF) power signal in dB above MDS to the WFMU clutter estimate lamp readings, and the representative amplitude of the weather signal output. Also extraneous clock signals present on the weather data signals, which resulted in a partial output of weather returns by exceeding the threshold, were minimized by a resistor-capacitor filter network as shown in figure 10.

WFMU Video Crossover Modification. The WFMU video crossover modification permits up to three variable video crossovers from the CD, as a WFMU front panel switch option, to control MTI/log video crossover function of the WFMU. The WFMU single-crossover wire strap feature will take precedence when the WFMU crossover switch is selected to INTERNAL (figure 11).

When in the WFMU external video crossover mode, a second input will become available from the CD to provide gated video crossover. This feature will generate pulse in pairs (log-to-MTI; then MTI-to-log) to permit masking of ground clutter at extended ranges.

Independent CP/MTI Compensation Controls. The present design of the MTI/CP compensation connects these controls to a common threshold setting of the inner and outer weather contours. On occasion, either a small maladjustment of the MTI and/or CP compensation controls, a low attenuation setting of the threshold switches, or an increase of radar noise could result in the effective WFMU threshold level being below the peaks of noise causing the WFMU to malfunction. Provision of an independent pair of CP and MTI compensation controls for each contour, permits additional compensation capability of the high-intensity weather contour. The location of these controls is shown in figure 12.

MTI AGC Regulation. The MTI noise of the fixed-pulse radar search equipment (FPS) and air route surveillance radar (ARSR)-type radar receivers was of insufficient density to allow the WFMU AGC circuitry to regulate. This regulation problem was corrected by two WFMU modifications which are identified in Electronic Equipment Modification Handbook 6350.10, chapters 1 and 4. These modifications included the addition of a helipot-type variable resistor to change the level of the MTI noise, and a modification of the noise count logic to activate the WFMU MTI AGC circuit. However, as the final WFMU-200 design may include the use of MTI-log video rather than raw MTI video, the WFMU-200 MTI regulation problem will be minimized by the use of a design essentially the same as the log channel (appendix B, figure B-1).

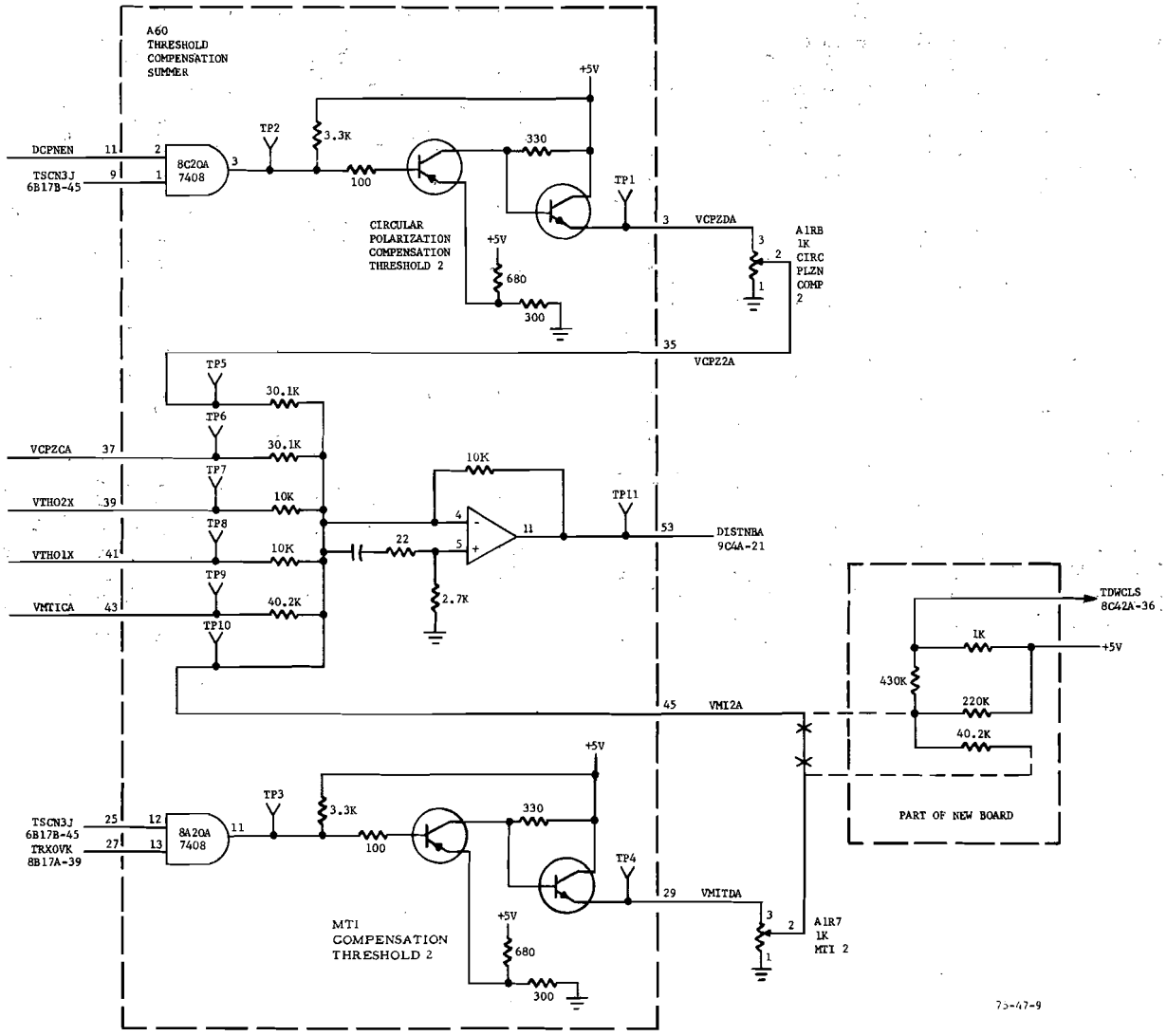

FIGURE 9. THRESHOLD OFFSET FOR CLUTTER ESTIMATE/WEATHER OUTPUT CORRELATION

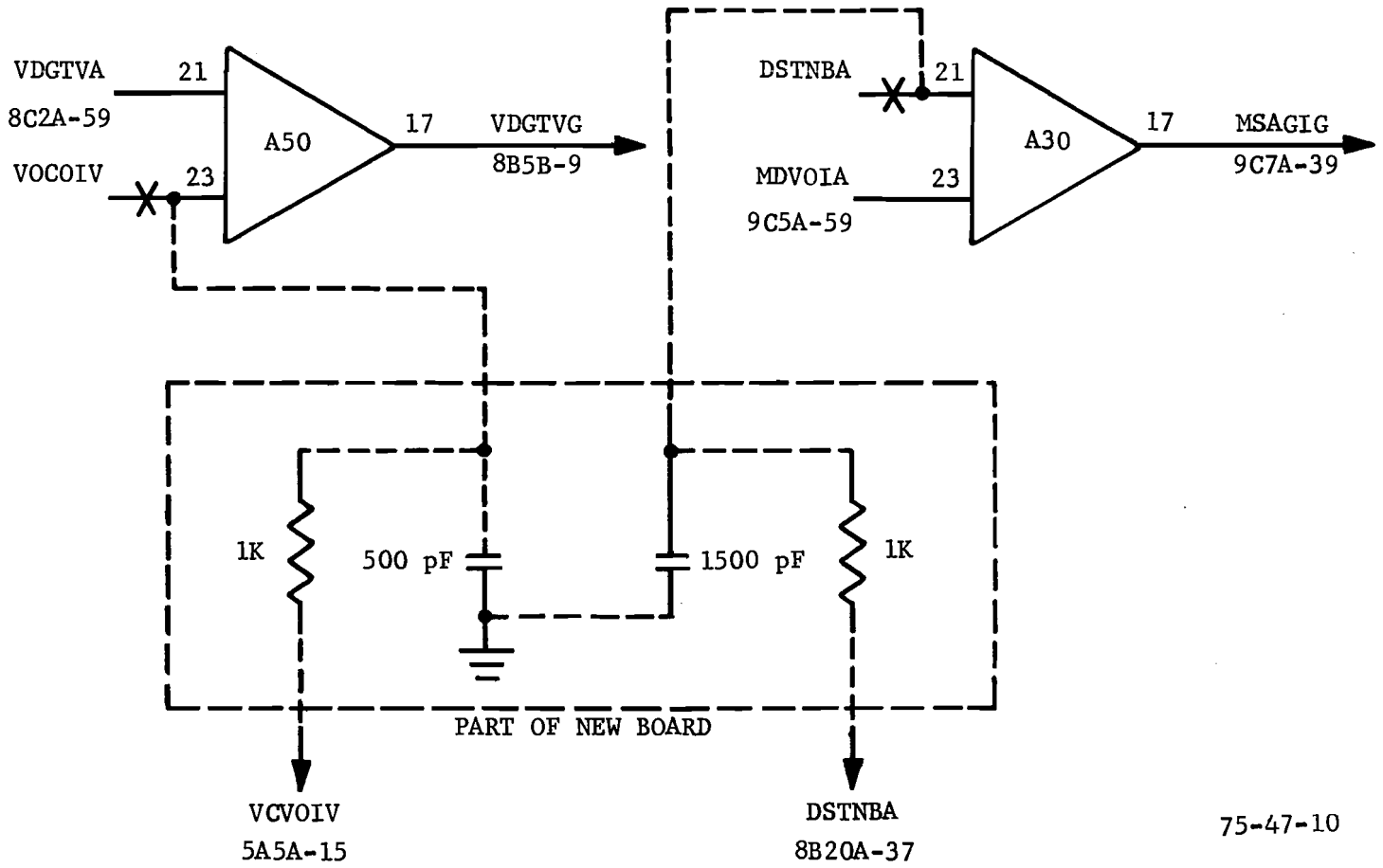

FIGURE 10. INTEGRATION MODIFICATION OF A/D CONVERSION AND CLUTTER ESTIMATE CIRCUITS

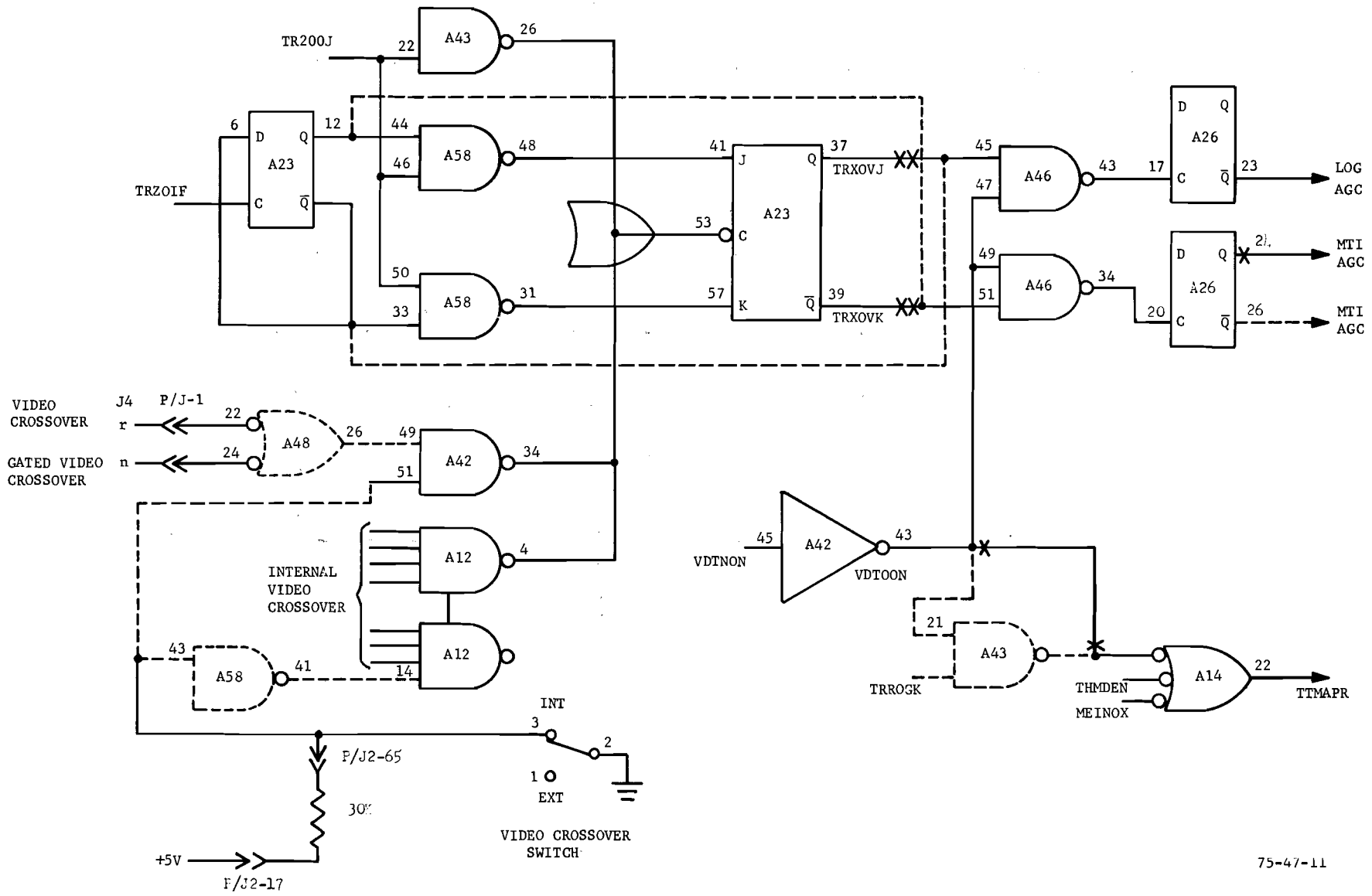

FIGURE 11. INTERNAL/EXTERNAL VIDEO CROSSOVER MODIFICATION

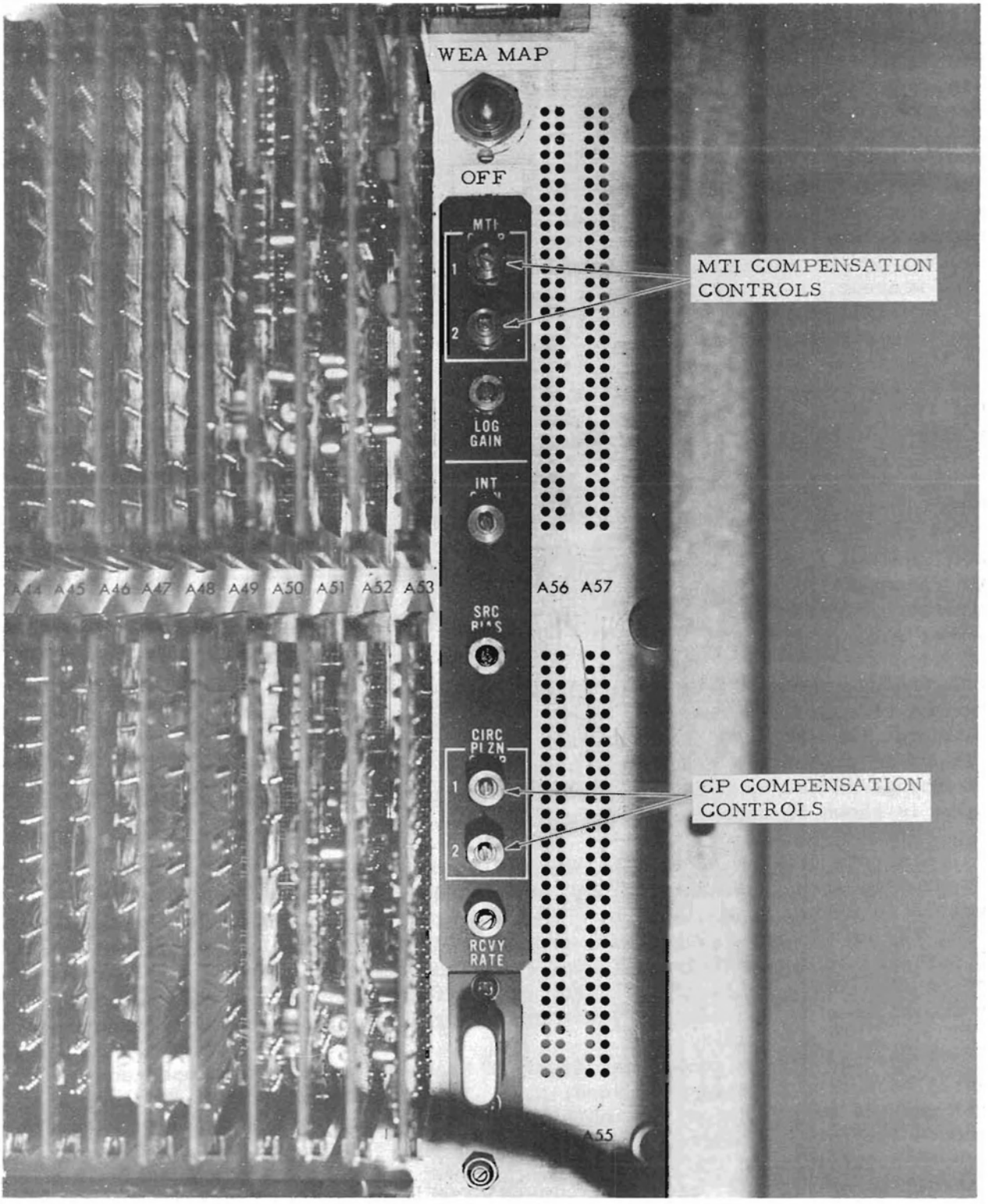

FIGURE 12. WFMU INTERNAL CONTROLS

Rapid Update of Clutter Estimate. It was determined during maintenance checks and system alignment testing of the WFMU-200 that the one-scan update of the clutter estimate lamps was inadequate. A minor design change (see figure 13) permits a clutter estimate more frequently than every second, a feature that will facilitate the accomplishment of alignment procedures.

WFMU-200 Scaling. Special test procedures were tried and developed by the contractor/NAFEC/Airway Facilities test team (see appendix C) to establish a direct correlation between a test RF power input signal, the WFMU clutter estimate lamps, and the test weather output signal to the Air Route Traffic Control Center (ARTCC). The WFMU-200's monitoring signals, test video and test weather, were modified to be representative of operational signals (figure 14), and a new WFMU scaling approach was established. The log gain control, although aligned at the 2-volt mid-signal amplitude and found to be linear (CD test weather signal input vs. clutter estimate lamps), was not at the same slope as the attenuated signal from the RF generator. The log video gain adjustment is critical and must match the slope of the WFMU scaling to the slope of the attenuated RF signal at 5-dB intervals over the dynamic range of the receiver. A 2-point scaling reference, for example 15 and 45 dB above minimum discernible signal (MDS), was compared to the WFMU clutter estimate lamp indications to establish the identical difference ($\pm$1/2 dB) at these signal levels. Repeated adjustment of the log gain control was required to achieve the proper slope. By the addition of a log video MDS compensation control, direct correlation of the RF signal, the WFMU-200 clutter estimate lamps (in dB), and the output test weather contour to the Center was achieved.

Conversion of MTI Video to MTI-Log Video. Since the FAA is in the process of modifying the radar interface receiver equipment to provide MTI-log video for the WFMU-200 (NCP case file ANA-120-WOG-029), the MTI portion of the WFMU video processing group will be modified to conform with the log channel. The change in the WFMU-200 MTI video design to accommodate the MTI-log input video is shown in appendix B, figure B-1.

Aircraft Breakthrough. The initial WFMU design of range averaging did not prevent strong aircraft returns from being presented as random weather symbols on narrow band displays. This was attributed to the fact that strong radar target returns exceeded the transmitted pulse width by approximately 50 percent. This condition extended the WFMU detection over two of four consecutive range cells, rather than one of four range cells, and resulted in an increase in the clutter estimate averaging and a threshold breakthrough.

A special design to prevent aircraft breakthrough was developed and installed during testing at Elwood, N.J. This new logic, shown in figure 15 will provide an adjustment to inhibit the contouring of data for 3 to 12 microseconds (μs) when activated by a fast-rise radar signal, and an additional adjustment to inhibit the reactivation of this circuit for 9 to 20 μs. This control, identified as "target eliminate disable interval adjust," includes logic which, upon detection of fast-rise clutter that extends in range beyond the pulse width of a target, will disable the target eliminate function.

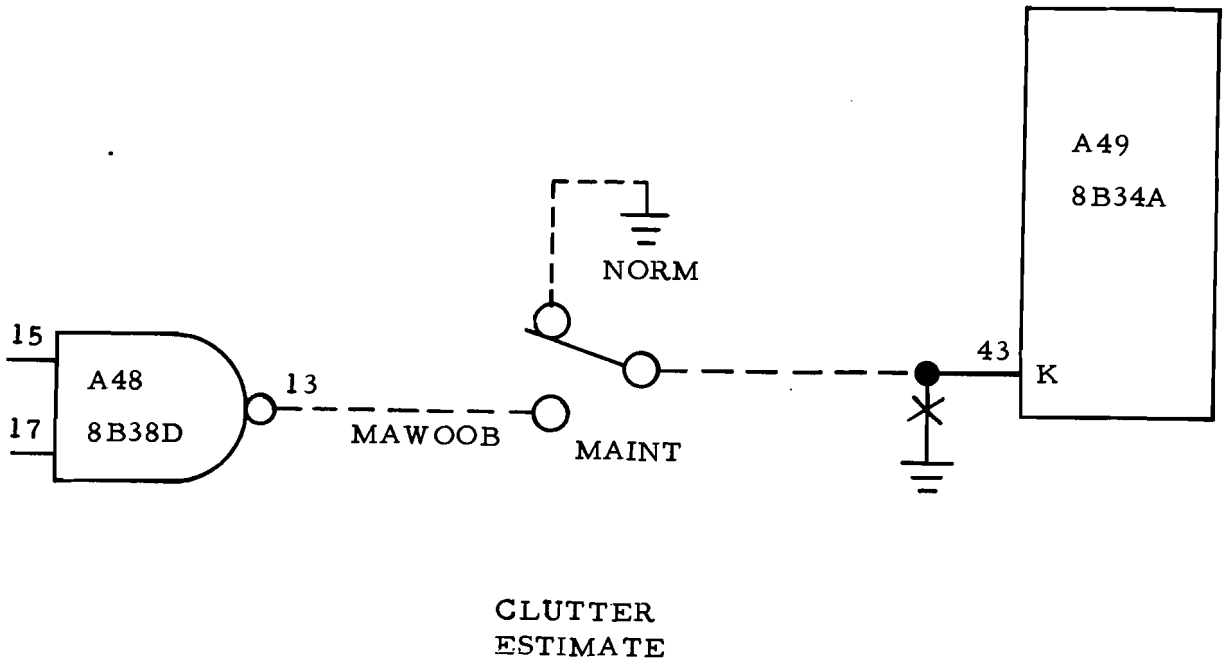

FIGURE 13. MAINTENANCE RAPID CLUTTER ESTIMATE MODIFICATION

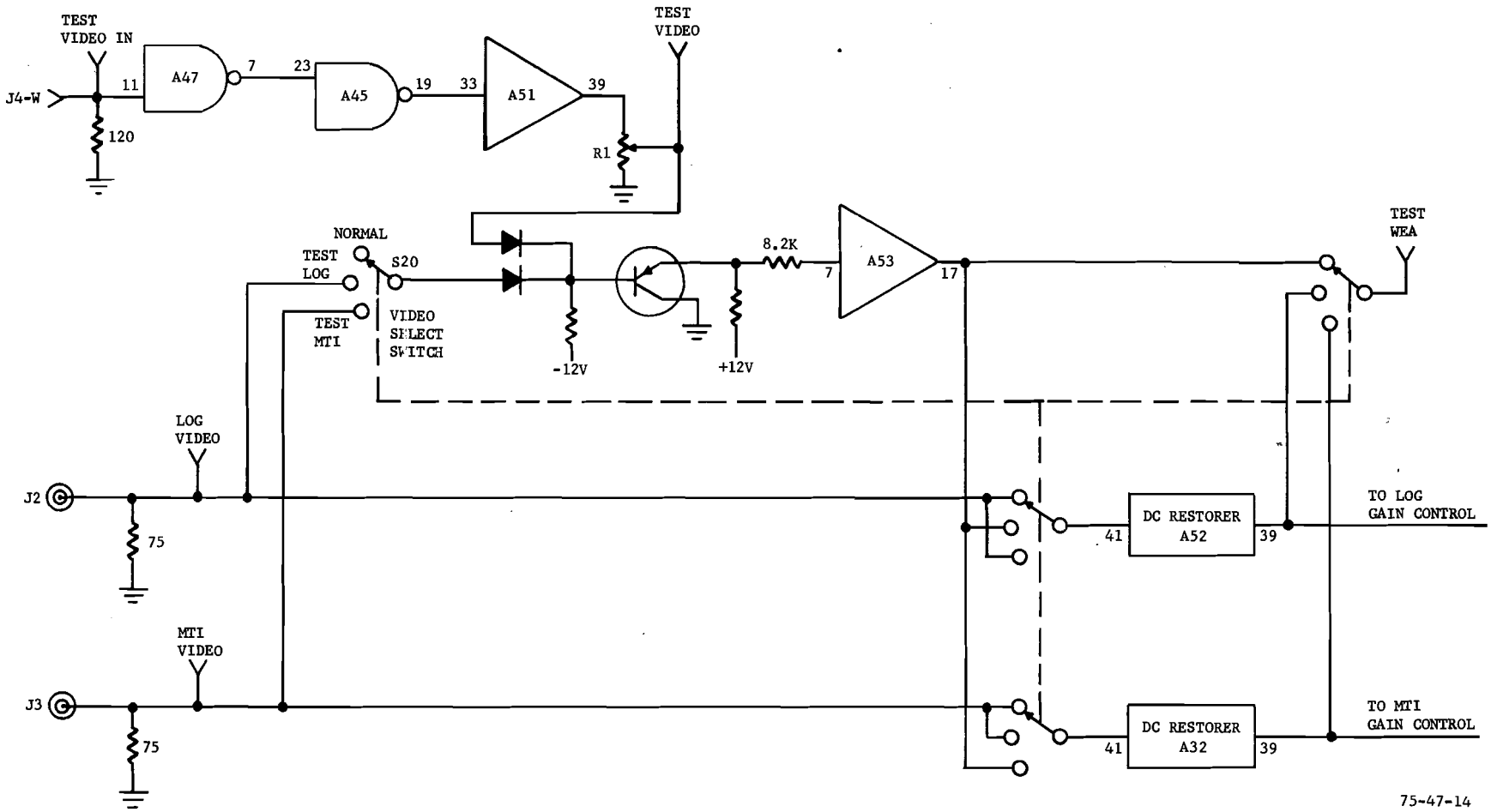

FIGURE 14. MODIFIED TEST VIDEO FUNCTION OF VIDEO PROCESSING GROUP

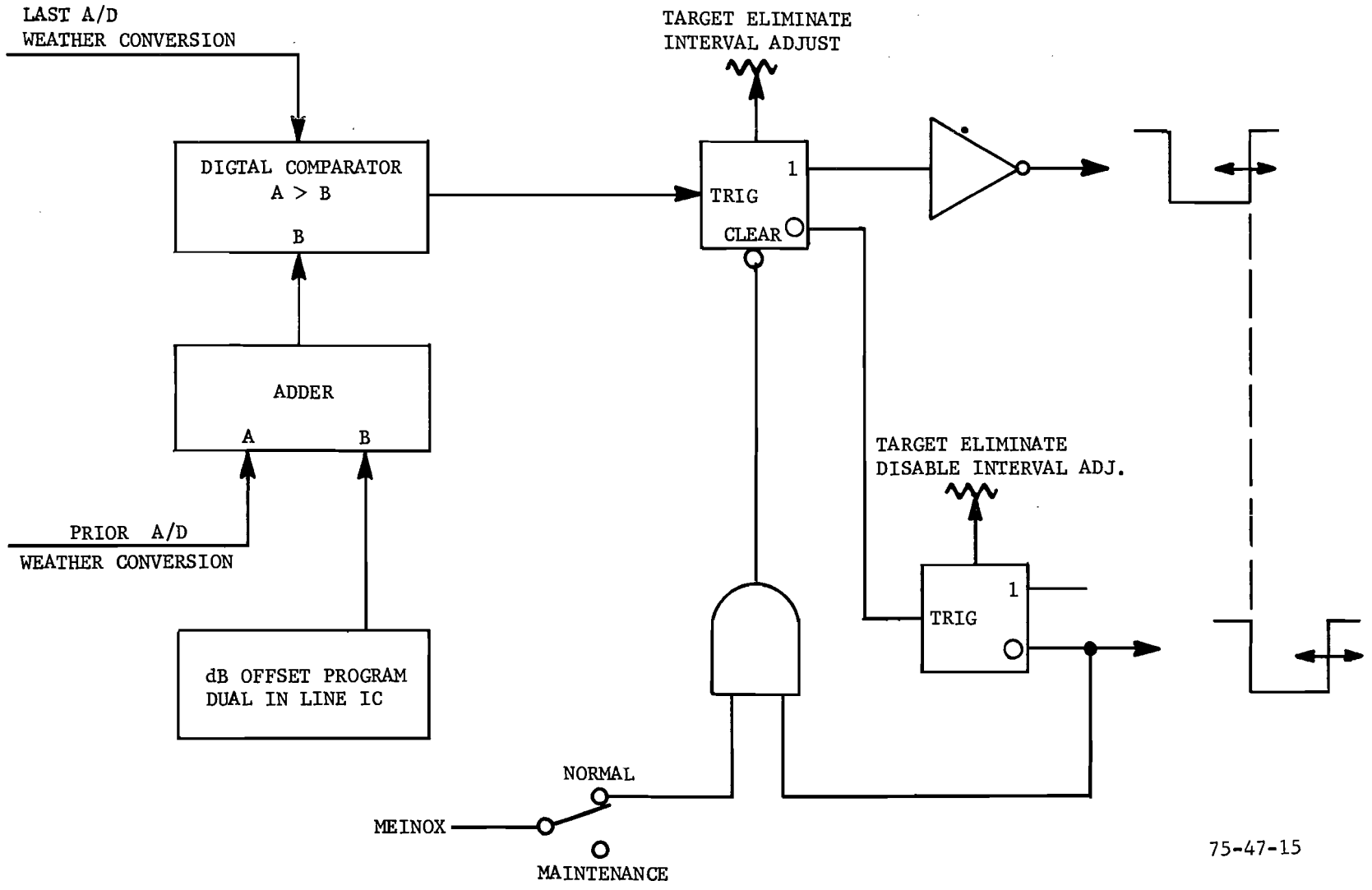

FIGURE 15. AIRCRAFT ELIMINATOR BLOCK DIAGRAM

RADAR-WFMU-CD INTERFACE. Two basic types of radar-WFMU-CD interface receiver modification equipment were provided for the FAA and joint-use long-range radar facilities. These are modification type FA-8934 for FPS-7 and FPS-60 series radars, and type FA-8969 for ARSR series radars. To provide a suitable MTI input video to the WFMU (dynamic range of greater than 30 dB and a signal/noise (S/N) ratio of approximately 6:1), changes to each of these receiver interface modification equipments are being incorporated to convert MTI video to MTI-log video as indicated in NCP case file ANA-120-WOG-029 and appendix B of this report. An electronic equipment modification (EEM) 6350.10, chapter 5, is being prepared to include changes for the WFMU MTI video at the receiver interface equipment and at the corresponding WFMU-200 for improvement in the weather subsystem performance.

In addition, there are WFMU internal and external video crossover changes. Figure 16 shows the WFMU/CD interface modification which includes two video crossover functions. The external video crossover wire changes are connections from the radar quantizer group of the CD to the junction box, and connections from the junction box to the external multiple-connector plug (P4) of the WFMU. An update of NCP ANA-120-COD-002 will provide these changes.

THEORY OF OPERATION.

The theory of operation contained herein will only be in sufficient detail to facilitate an understanding of the new design features, the tests performed and their results. The modified instruction manual by the contractor has not been completed at this time. The original documentation on the WFMU theory of operation is presented in the contractor's instruction book TI6150.2A (WFMU type FA-8172) and in FAA report FAA-RD-72-52, dated June 1972.

DISCUSSION

GENERAL DESCRIPTION OF TEST METHODS AND RESULTS.

A general description of test methods and results of the 10 major changes incorporated in the WFMU-200 are summarized herein:

1. Increase in WFMU Range to 200 nmi.

Method: A common digitizer (CD) sector map signal was provided in excess of 200 nmi and observed as test video output at the WEA CTR DATA test point of the WFMU.

Result: Range monitored on scope and observed on computer printout as 200 nmi (2470 μs).

2. WFMU Azimuth Resolution Modification.

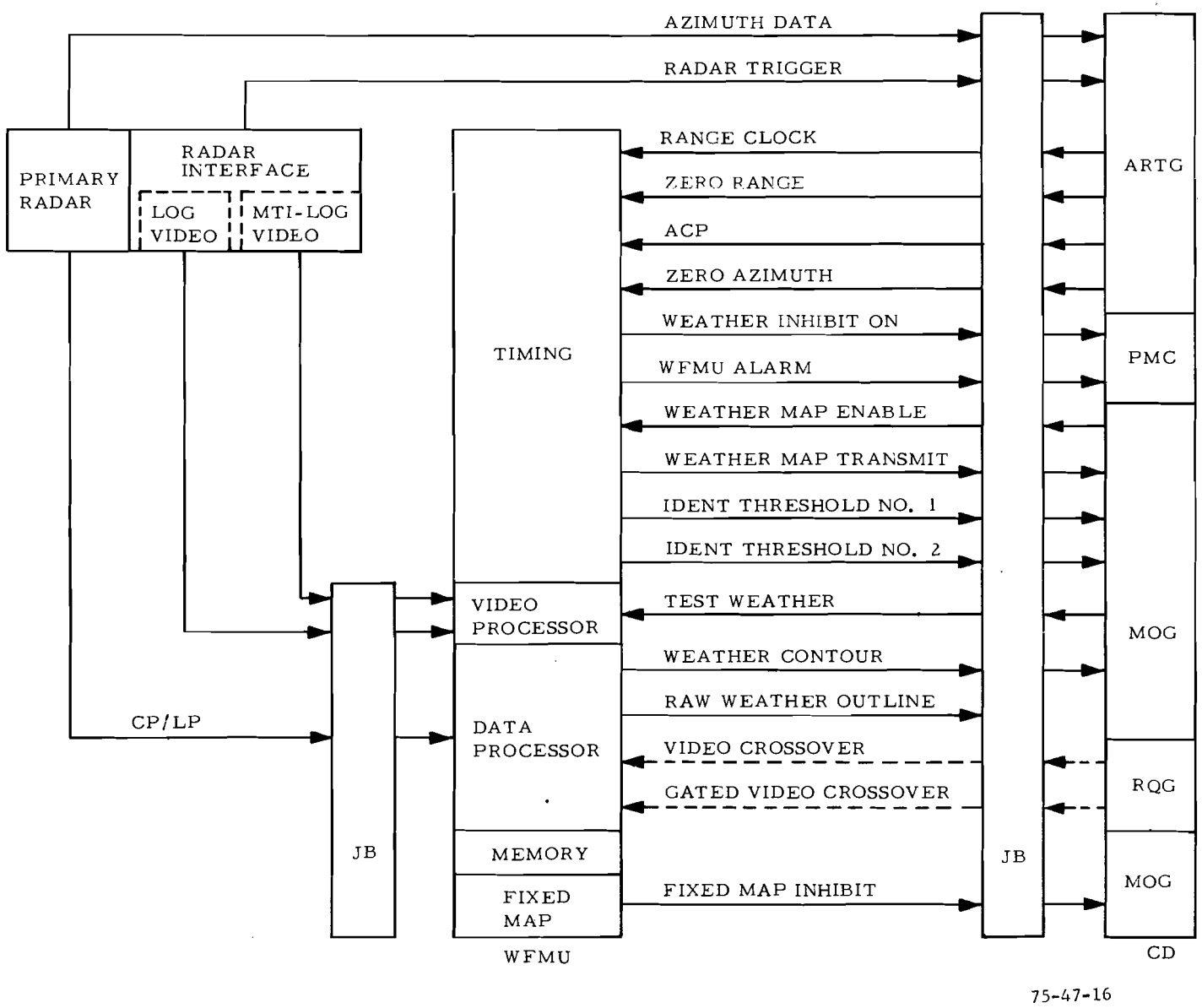

FIGURE 16. WFMU EXTERNAL INTERFACES

Method: Test video was provided from the CD sector map of approximately 360° and a 200-nmi range. Observed azimuth and range pattern of WFMU/CD processed messages on 9020 computer printout COMDIG by operation of the CD Record program (D74B3) which received messages from a FR-1800 digital recorder.

Result: Data from computer printout shows a range-azimuth pattern as indicated in the WFMU design exhibited in figure 5 and in sample printout, figure 17.

3. WFMU Threshold Setting Modifications.

Method:

a. A digital voltmeter was used to determine the precise values of the new threshold switch settings as identified on the outer and inner threshold switches.

b. Slowly reduce the test weather input signal with the WFMU test video signal amplitude control while monitoring the WEA CTR DATA output and observe the clutter estimate at the point where the output signal disappears.

Results:

a. Voltage measurements of the threshold attenuation levels and their comparison with the theoretical (if precision resistors used) and calculated (from standard resistors actually used) threshold voltages, show that all levels were within ± 0.04 volts or $\pm 1/2$ dB as presented in table 2.

b. At the point where monitored WEA CTR DATA signal disappeared, the clutter estimate lamp value in dB corresponded with the active threshold switch setting in dB.

4. WFMU Video Crossover Modification.

Method: With the WFMU video crossover switch selected to internal (figure 7), the WFMU generated single-range strap-option feature was monitored at WFMU test point RNG CRSVR. With the crossover switch selected to external, a CD modification originating from the video crossover output (signal CDBE7J) interfaced with the WFMU so that the three CD video crossover signals activated the WFMU crossover function.

Result: When in either internal or external position of the WFMU video crossover switch, the monitored output at the WFMU and as observed on the RAPPI (PPI mode) agreed in range and azimuth with the values selected.

5. Independent CP/MTI Compensation Controls.

Method: Adjustments of the MTI and CP compensation controls, individually and in combination, were accomplished to represent specific values in dB for increasing the output of the test weather data. The test weather video signal

DATE 06/30/75 COMBIG ROUTINE - LIST CD DATA PAGE 106

CD TEST RUN - NONE DATE - 05-16-75

CD SITE: ELWOOD

DATA REF - TRUE NORTH SITE DECLINA - NONE DATA TYPE - WEATHER MAP SCAN INTERVAL - REGULAR

TIME	USER	MAP TYPE	RANGE START N.M.	RANGE START 1/8	RANGE STOP N.M.	RANGE STOP 1/8	AZIMUTH DEGREES	AZIMUTH ACPS
11/56/53.6	F	WX - OUTER	136	0	196	0	7.822	89
11/56/53.6	F	WX - OUTER	40	0	196	0	8.964	102
11/56/53.6	F	WX - OUTER	136	0	196	0	10.019	114
11/56/53.7	F	WX - OUTER	80	0	196	0	10.986	125
11/56/53.7	F	WX - OUTER	136	0	196	0	12.041	137
11/56/53.7	F	WX - OUTER	19	4	196	0	13.095	149
11/56/53.7	F	WX - OUTER	136	0	196	0	14.150	161
11/56/53.8	F	WX - OUTER	80	0	196	0	15.205	173
11/56/53.8	F	WX - OUTER	136	0	196	0	16.259	185
11/56/56.1	F	WX - OUTER	40	0	92	0	101.601	1156
11/56/56.1	F	WX - OUTER	80	0	92	0	103.710	1180
11/56/56.2	F	WX - OUTER	27	0	92	0	105.908	1205
11/56/56.2	F	WX - OUTER	80	0	92	0	108.017	1229
11/56/56.3	F	WX - OUTER	40	0	92	0	110.039	1252
11/56/56.3	F	WX - OUTER	80	0	92	0	112.148	1276
11/56/56.4	F	WX - OUTER	27	0	92	0	114.345	1301
11/56/56.5	F	WX - OUTER	80	0	92	0	116.455	1325
11/56/56.5	F	WX - OUTER	40	0	92	0	118.476	1348
11/56/56.6	F	WX - OUTER	80	0	92	0	120.585	1372
11/56/56.6	F	WX - OUTER	27	0	92	0	122.783	1397
11/56/56.7	F	WX - OUTER	80	0	92	0	124.892	1421
11/56/56.7	F	WX - OUTER	40	0	92	0	126.914	1444
11/56/56.8	F	WX - OUTER	80	0	92	0	129.023	1468
11/56/56.9	F	WX - OUTER	27	0	92	0	131.220	1493
11/56/56.9	F	WX - OUTER	80	0	92	0	133.330	1517
11/56/57.0	F	WX - OUTER	40	0	92	0	135.351	1540
11/56/57.0	F	WX - OUTER	80	0	92	0	137.460	1564
11/56/57.1	F	WX - OUTER	27	0	92	0	139.658	1589
11/56/59.4	F	WX - OUTER	136	0	163	4	225.087	2561
11/56/59.4	F	WX - OUTER	123	0	164	0	226.142	2573
11/56/59.4	F	WX - OUTER	136	0	164	0	227.197	2585
11/56/59.4	F	WX - OUTER	123	0	164	0	228.251	2597
11/56/59.5	F	WX - OUTER	136	0	164	0	229.306	2609
11/56/59.5	F	WX - OUTER	123	0	164	0	230.361	2621
11/56/59.5	F	WX - OUTER	136	0	164	0	231.416	2633
11/56/59.6	F	WX - OUTER	123	0	164	0	232.470	2645
11/56/59.6	F	WX - OUTER	136	0	164	0	233.525	2657
11/56/59.6	F	WX - OUTER	123	0	164	0	234.580	2669
11/56/59.6	F	WX - OUTER	136	0	164	0	235.722	2682
11/57/02.7	F	WX - OUTER	136	0	196	0	349.541	3977
11/57/02.7	F	WX - OUTER	19	4	196	0	350.595	3989
11/57/02.7	F	WX - OUTER	136	0	196	0	351.738	4002
11/57/02.8	F	WX - OUTER	80	0	196	0	352.705	4013
11/57/02.8	F	WX - OUTER	136	0	196	0	353.759	4025
11/57/02.8	F	WX - OUTER	40	0	196	0	354.814	4037
11/57/02.8	F	WX - OUTER	136	0	196	0	355.869	4049
11/57/02.9	F	WX - OUTER	80	0	196	0	356.923	4061

FIGURE 17. SAMPLE COMPUTER PRINTOUT OF WFMU-200 TEST WEDGES

TABLE 2. WFMU THRESHOLD MEASUREMENTS

Threshold Voltage	Threshold 1 Attenuation Switch Settings (dB)									
	33	30	27	24	21	18	15	12	9	6
Theoretical	2.613	2.375	2.137	1.900	1.663	1.425	1.188	0.950	0.713	0.475
Calculated	2.604	2.367	2.130	1.891	1.657	1.421	1.184	0.947	0.711	0.474
Measured	2.57	2.34	2.11	1.88	1.65	1.42	1.18	0.95	0.72	0.48

Threshold Voltage	Threshold 2 Attenuation Switch Settings (dB)									
	42	36	33	30	27	24	21	18	15	12
Theoretical	3.325	2.850	2.613	2.375	2.137	1.900	1.663	1.425	1.188	0.950
Calculated	3.321	2.847	2.610	2.373	2.136	1.899	1.663	1.426	1.189	0.952
Measured	3.27	2.81	2.58	2.35	2.12	1.88	1.65	1.42	1.19	0.95

Accuracy within ± 0.04 volts, $\pm$ 1/2 dB

amplitude control was reduced to determine the point where the WEA CTR DATA disappears. The functioning of the compensation controls was determined by noting that the attenuation of the active threshold switch setting in dB, less the compensation in dB, equalled the clutter estimate lamp indication when the monitored test signal output disappeared.

Result: In all cases where MTI or CP compensation, alone or in combination, at the point where the test data becomes zero, the clutter estimate value corresponded with the active attenuation switch setting less the calculated compensation value in dB.

6. MTI AGC Regulation.

Method: The MTI video inputs were verified and the MTI video was calibrated to represent a receiver of 20 dB dynamic range. For example, with a 2-volt test input signal, the MTI offset control (EEM 6350.10, chapter 1) was adjusted for a clutter estimate of 14 dB. The clutter estimate lamp values and the MTI AGC voltages were recorded over a range of input test signals from 1.0 to 3.5 volts in 0.5 volt steps. These measurements were repeated, and the MTI offset was recalibrated, considering MTI receiver dynamic ranges of 22, 24, 26, and 28 dB above MDS. These measurements were repeated using a WFMU modification of the noise count logic (16, 32, or 64 counts) via a wire-strap option. In all cases, the deviation of the clutter estimate lamps was compared in dB with calculated input signal.

Results: The MTI clutter estimate comparison in any of the test runs showed that, in at least one of the noise count configurations, the WFMU clutter estimate lamp indications concurred with the theoretical clutter estimate within ± 2 dB. The only exception was the adjustment for the MTI receiver dynamic range of 28 dB above MDS, as the WFMU MTI circuit did not have sufficient gain to operate at this level. A summary of the results are presented in appendix D.

7. Rapid Update of Clutter Estimate.

Method: With the clutter estimate switch selected to maintenance and a test video signal select at the WFMU, a variability of the clutter estimate lamps update rate was observed by selection of the WFMU azimuth sector in degrees switches.

Result: The clutter estimate update feature operated in accordance with the WFMU design.

8. WFMU-200 Scaling.

Method: A modulated 100 μs signal by the RF signal generator inserted in the radar directional coupler, was used to establish a log video transfer characteristic curve monitored at the input to the WFMU. The dynamic range of the log video was recorded at the input to the WFMU by noting the difference

of the test target signal strength on the RF generator (Empire Devices, Type SG-11) between MDS and when the signal approached limit level. The dynamic range of the log receiver was determined at 60 dB and the log video at the WFMU was adjusted for a signal-to-noise input at the WFMU of 4/0.55 $\pm$0.25 volts. The WFMU clutter estimate lamp indication was noted when the RF signal generator attenuation was adjusted to 15 and 45 dB above MDS, and the difference between these settings compared to the clutter estimate in dB was recorded. As the difference in clutter estimate/signal generator dB values were not the same, ($\pm$1/2 dB), the WFMU log gain control was adjusted and the procedure repeated. This procedure required repeating two or three times until these values in dB were in agreement. Upon agreement, the log MDS compensation control was adjusted to reduce the dB difference to zero. The scaling of the WFMU clutter estimate lamps was compared to the signal generator attenuation by preparation of a transfer curve from 10 to 60 dB in 5 dB steps. The WFMU scaling was verified using the test video input at various amplitudes (converted to dB, 0.067 volts/dB) and noted the correspondence with the clutter estimate lamps.

Result: With the new two-point alignment procedure and the addition of the log MDS compensation control, the WFMU scaling is now in accordance with the intended design.

9. Conversion of MTI Video to MTI-Log Video.

No formal tests were conducted to determine the performance of the WFMU, but with the availability of the MTI-log video at the output of the radar interface equipment (air route surveillance radar (ARSR) types and fixed pulse search (FPS) radar types), the WFMU dynamic range (over 30 dB) and stability when in MTI will be improved. The MTI video portion of the design will be modified to employ circuits similar to the log video, and will additionally provide good scaling and AGC regulation characteristics.

10. Aircraft Breakthough.

Method: A 100 μs test pulse was provided in the directional coupler of the radar. An 8-dB offset was entered in the logic to the digital comparator for target elimination. The upper and lower (95 and 5 percent) limits were determined by noting at what signal strength in dB targets started to disappear and almost completely disappeared.

Results: Preliminary tests showed that 5 percent of the target ring was rejected by the aircraft breakthrough logic at 13 dB, and 95 percent of the target ring was rejected by the aircraft breakthrough logic at 15 dB.

SUMMARY OF RESULTS

1. Operational tests, computer printouts, and plots of the test data output demonstrated the fidelity of the WFMU range and azimuth resolution modifications to be in accordance with the specifications.

2. A modified two-point alignment procedure along with a log MDS compensation control permitted direct correlation of the RF power input, the WFMU clutter estimate lamp indications, and the output test weather contour data to the Center.

3. The outlining of target returns does not occur with the implementation of logic which inhibits the contouring of data when activated by fast-rise radar signal. Five percent of a test target ring was rejected by aircraft breakthrough logic at 13 dB above MDS, and 95 percent of a test target ring was rejected by aircraft breakthrough logic at 15 dB above MDS.

4. Preliminary tests at Elwood and at field facilities, following temporary modifications of the radar interface equipment to provide MTI-log video at the WFMU input, showed an MTI-log dynamic range of 30 dB and improvement in video noise characteristics.

5. The increase in WFMU transmission intervals (TI) at the outer ranges, beyond 136 miles, was offset by the reduction in TI's at the shorter ranges to effectively reduce rather than increase the total weather messages transmitted over the land lines while maintaining contour fidelity.

6. The common digitizer-WFMU interface modification established that, with the WFMU video crossover switch in internal or external position, the monitored output corresponded in range and azimuth with the value selected.

7. The MTI AGC regulation, improved by the addition of an MTI offset control and a noise count selection circuit, was found to exhibit stability within ± 2 dB of the theoretical clutter estimate.

8. The attenuation settings of the outer and inner contour threshold levels, now selectable to 3-dB intervals, were determined to be within $\pm 1/2$ dB of the theoretical threshold value.

9. The circular polarization and MTI compensation controls for each contour, whether independently used or in combination, showed that the compensation was in accordance with the WFMU design.

10. The rapid clutter estimate lamp indication modification feature operated in accordance with the WFMU design.

CONCLUSIONS

Based on the results of this evaluation, it is concluded that:

1. The weather subsystem, in conjunction with the CD, can effectively measure weather clutter power levels in dB, define contours representative of points of equal energy, and control the rate at which the CD transmits digital weather messages provided:

   a. The radar interface equipments are installed at all CD/WFMU sites to provide log receiver and MTI receiver outputs with a minimum dynamic range of 60 and 30 dB, respectively, and a video peak amplitude of 4 volts at the WFMU input to permit calibration of the clutter estimate.

   b. The log and MTI receiver ambient noise level is adjustable to a nominal 0.55 ($\pm$0.25) volt in order to assure reliable WFMU AGC action.

2. The contouring of radar targets is eliminated by the inhibiting of radar data with a fast rise signal. These data may be inhibited over a range of 3 to 12 μs and are prevented from reactivation over a range of 9 to 20 μs.

3. The signal strength of the WFMU clutter estimate lamps and the weather contour output agree with the radar RF power input in dB due to a hardware change and a modification to the alignment procedures.

4. The WFMU MTI channel detection capability and stability is enhanced due to the modification of radar interface to provide MTI-log video rather than raw MTI.

5. The WFMU contour fidelity is increased at the extended ranges due to three-step 2:1 increase in transmission intervals. The data rate is not adversely affected, as the high-density resolution at the ranges beyond 136 miles is more than offset by the WFMU filtering at the shorter ranges less than 80 miles and further at less than 40 miles. The WFMU range-azimuth resolution data rate pattern may be reduced by a factor of two by selecting the WFMU resolution control to LOW.

6. The WFMU internal-external video crossover switch adequately provides, as selected, the wire-strap crossover function of the WFMU or the range-azimuth video crossover as programmed on the CD switches.

7. The stability of the MTI AGC regulation is enhanced, within $\pm$2 dB, by the addition of an MTI offset control and a noise count selection circuit.

8. The WFMU threshold attenuation settings for inner and outer contours accurately provide weather output data at multiples of 3-dB intervals.

RECOMMENDATIONS

The following recommendations are made:

1. The modified model 3d weather subsystem should be integrated into the NAS En Route Stage A after:

   a. The MTI-log video modifications have been installed as delineated in recommendation 2, and,

   b. The operational performance of the two modified preproduction WFMU's, scheduled for installation at San Pedro and Boron, Cal., have been successfully demonstrated.

2. The radar interface equipments should be modified to provide a 4-volt MTI-log video at a dynamic range greater than 30 dB, and a signal-to-noise ratio of approximately 6 to 1.

3. The log and MTI-log video should be adjustable, to a signal amplitude of 4.0 volts and an ambient noise level of a nominal 0.55 $\pm$0.25 volts in order to assure reliable WFMU AGC action. This adjustment should be checked periodically.

4. The WFMU high resolution should be selected for the low-intensity contour to present improved fidelity of contours at the extended ranges.

5. The WFMU low-intensity contour (threshold 1) should be selected to a level of 12 dB, which is representative of "circular polarization punch-through" intensity. This contour threshold should not be selected to a level less than 9 dB to avoid the possible processing of noise as weather information.

6. The high-intensity threshold should be set at 24 dB, as this is the level above which moderate-to-severe turbulence may be encountered within the storm boundaries. Further operational experience should be utilized to determine the optimum threshold level for providing advisory information for routing aircraft around potentially hazardous weather.

APPENDIX A

DATA RATES

Statistics on data rates were acquired from various storms, from radar sites via computer printouts of weather data, from the Chicago Center (La Grange and McCook), Kansas City Center (Olathe and St. Louis), and from the most severe storms recorded at Elwood, N.J, A comparison was made of data rates from these storms using the original WFMU design of high resolution (outer contour--48 ACP transmission interval, and inner contour--24 ACP transmission interval) versus the interim WFMU range resolution modification (NCP 3052). This interim modification of the weather data resulted in a change in the WFMU outer contour resolution from 48 to 24 ACP's, and a software change at the central computer complex to filter the ranges of the WFMU dual contour 24 ACP transmission interval (TI) in a balanced contour pattern before processing by the display computer. This pattern was structured as follows:

Every fourth 24 ACP TI was processed in the normal manner, every intermediate fourth 24 ACP TI was processed after 48 miles, and every other 24 ACP TI was processed after 80 miles.

In addition, the software modification resulted in an increase in the acceptance rate of weather messages from 16 to 32 messages/second and from 100 to 200 messages/scan.

A review of the strongest storms at extended ranges showed that at the outer contour threshold of 12 dB, less than 3 percent of the weather data extended beyond 80 miles and approximately 70 percent of the data was less than 48 miles. This condition resulted in an outer contour data rate reduction of approximately 32 percent. In the case of the inner contour, which was initially designed to transmit data 24 ACP's, the data reduction was in the order of 70 percent. Table A-1 shows the computed percent reduction in data rates after range filtering of the weather messages by the computer display channel (CDC).

The odds are that in most all storms twice as many weather messages may occur at less than 48 miles than at greater than 80 miles for a net improvement in data reduction for the outer contour. For the inner contour, the improvement in data rate reduction was greater due to fewer high-intensity messages at extended ranges, and the fact that the WFMU azimuth resolution TI of 24 ACP's (high-resolution) was reduced by 2:1 at ranges less than 80 miles and at 4:1 at ranges less than 48 miles.

Data rate calculations were also determined at filtered range and azimuths established for the WFMU-200 design as shown in table A-2 and A-3. One of the strongest and extended range storms selected for data rate comparison was recorded from the FPS-7 radar site at Kirksville, Missouri. Comparison of the computed filtering to the original transmission of the weather data outer contour (table A-2) showed that for the WFMU-200 high resolution there was

TABLE A-1. WEATHER MESSAGE RATE PER SCAN

Storm	*THRS (dB)	*TI (ACP's)	Avg Msgs/ Scan	Avg Msgs by Range >80 (Percent)	>48 (Percent)	<48 (Percent)	Avg Filtered Msgs/ Scan	Reduction in WX Msgs to CDC (Percent)
Outer Contour								
Agnes 2	12	48	95	-	34.3	65.7	64	32.6
7/11/73	12	48	106	1.7	9.8	88.5	61	42.5
1/11/74	12	48	48	2.7	50.7	46.6	38	20.8
3/21/74	12	48	100	-	26.2	73.8	63	36.5
3/21/74	12	48	109	-	31.2	68.8	72	33.9
Inner Contour								
Agnes 2	24	24	97	-	4.5	95.5	26	73.2
7/11/73	24	24	210	0.4	1.3	98.3	54	74.3
1/11/74								
3/21/74	24	24	20	-	17.3	82.7	6	70.0
3/21/74	24	24	25	-	17.4	82.6	8	68.0

*THRS - Threshold
TI - Transmission Interval

TABLE A-2. DATA RATE RANGE FILTERING COMPUTATION FOR WFMU-200 AZIMUTH RESOLUTION*

Scan	CTR	Total	Range Interval >136	Range Interval >80	Range Interval >40	Range Interval <40	Trans Mode	Filtered Range Interval >136	Filtered Range Interval >80	Filtered Range Interval >40	Filtered Range Interval <40	Filtered Range Interval Total	Trans Mode	Filtered Range Interval >136	Filtered Range Interval >80	Filtered Range Interval >40	Filtered Range Interval <40	Filtered Range Interval Total
1	Outer	89	-	52	29	8	High	-	104	29	4	137	Low	-	52	15	2	69
2	Outer	86	-	52	27	7	High	-	104	27	3	134	Low	-	52	14	2	68
3	Outer	75	-	45	21	9	High	-	90	21	5	116	Low	-	45	10	2	57
3-Scan Total	Outer	250	-	140	77	24	High	-	294	77	12	387	Low	-	147	39	6	194
Percent	Outer		-	59.6	30.8	9.6												
							Percent Increase in WX Messages From CD	$= \frac{387 - 250}{250} = 54.8$					Percent Reduction in WX Messages From CD	$= \frac{250 - 194}{250} = 22.4$				
1	Outer	90	-	51	26	13	High	-	102	26	7	135	Low	-	51	13	4	68
2	Outer	82	-	52	22	8	High	-	104	22	4	130	Low	-	52	11	2	65
3	Outer	83	-	52	19	12	High	-	104	19	6	129	Low	-	52	10	3	65
3-Scan Total	Outer	255	-	155	67	33	High	-	310	67	17	394	Low	-	155	34	9	198
Percent	Outer		-	60.8	26.3	12.9												
							Percent Increase in WX Messages From CD	$= \frac{394 - 255}{255} = 54.5$					Percent Reduction in WX Messages From CD	$= \frac{255 - 198}{255} = 22.4$				

*Worst case recording--extracted from FR-950 video tape recording of FPS-7

Radar on 9/12/74 at Kirksville, Missouri

WFMU Settings	Outer Contour
Threshold Attenuation (dB)	12
Output Resolution, High (ACP's)	48

TABLE A-3. DATA RATE RANGE FILTERING COMPUTATION FOR WFMU-200 AZIMUTH RESOLUTION*

Scan	CTR	Total	Range Interval >136	Range Interval >80	Range Interval >40	Range Interval <40	Trans Mode	Filtered Range Interval >136	Filtered Range Interval >80	Filtered Range Interval >40	Filtered Range Interval <40	Filtered Range Interval Total	Trans Mode	Filtered Range Interval >136	Filtered Range Interval >80	Filtered Range Interval >40	Filtered Range Interval <40	Filtered Range Interval Total
1	Inner	44	-	27	14	3	High	-	27	7	1	35	Low	-	14	4	1	19
2	Inner	44	-	30	11	3	High	-	30	6	1	37	Low	-	15	3	1	19
3	Inner	47	-	30	15	2	High	-	30	7	1	38	Low	-	15	4	1	20
3-Scan Total	Inner	135	-	87	40	8	High	-	87	20	3	110	Low	-	44	11	3	58
Percent	Inner		-	64.4	29.6	6.0												
							Percent Reduction in WX Messages From CD	$= \frac{135 - 110}{135} = 18.5$					Percent Reduction in WX Messages From CD	$= \frac{135 - 58}{135} = 57.0$				
1	Inner	41	-	25	14	2	High	-	25	7	1	33	Low	-	13	4	1	18
2	Inner	46	-	32	10	4	High	-	32	5	1	38	Low	-	16	3	1	20
3	Inner	39	-	25	11	3	High	-	25	6	1	32	Low	-	13	3	1	17
3-Scan Total	Inner	126	-	82	35	9	High	-	82	18	3	103	Low	-	42	10	3	55
Percent	Inner		-	65.1	27.8	7.1												
							Percent Reduction in WX Messages From CD	$= \frac{126 - 103}{126} = 18.3$					Percent Reduction in WX Messages From CD	$= \frac{126 - 55}{126} = 56.3$				

*Worst case recording--extracted from FR-950 video tape recording of FPS-7 Radar on 9/12/74 at Kirksville, Missouri

WFMU Settings	Inner Contour
Threshold Attenuation (dB)	24
Output Resolution, High (ACP's)	24

actually an increase in the data rate by approximately 54 percent but by simulating the selection of the WFMU-200 low resolution the data was reduced from the reference by approximately 22 percent. For this particular storm, a 250-message count over a 3-scan period showed that 60 percent of the data showed the range in excess of 80 miles and only 10 percent showed the range less than 40 miles. Comparison of the filtering to the inner contour data (table A-3) showed that there was a reduction of weather messages at both HIGH and LOW WFMU resolution settings of 18 and 56 percent, respectively, when using the WFMU-200 azimuth resolution pattern.

APPENDIX B

MODIFIED RADAR INTERFACE/WFMU MTI CHANNEL

Improvements were desired in the effectiveness of the weather subsystem MTI contours such as stability and the presentation of high-intensity outlines. As a suitable MTI-log type video could be made available and processed by the radar interface portion of the weather subsystem, temporary modifications were installed, measurements were performed, and successful results were achieved at three radar facilities. These included the Olathe, Kansas, FPS-66 radar interface equipment (type FA-8934/2), and the St. Louis, Missouri, and Elwood, N.J., ARSR radar interface equipment (type FA-8969). After modification and radar interface alignment as described in NCP case file ANA-120-WOG-29, a 4-volt MTI-log video output, at a 6/1 signal-to-noise ratio and a dynamic range of more than 30 dB, was measured at the input to the WFMU. Accordingly, the MTI video channel of the WFMU is being redesigned to accommodate MTI-log video. Figure B-1 shows the planned modification of the WFMU MTI channel.

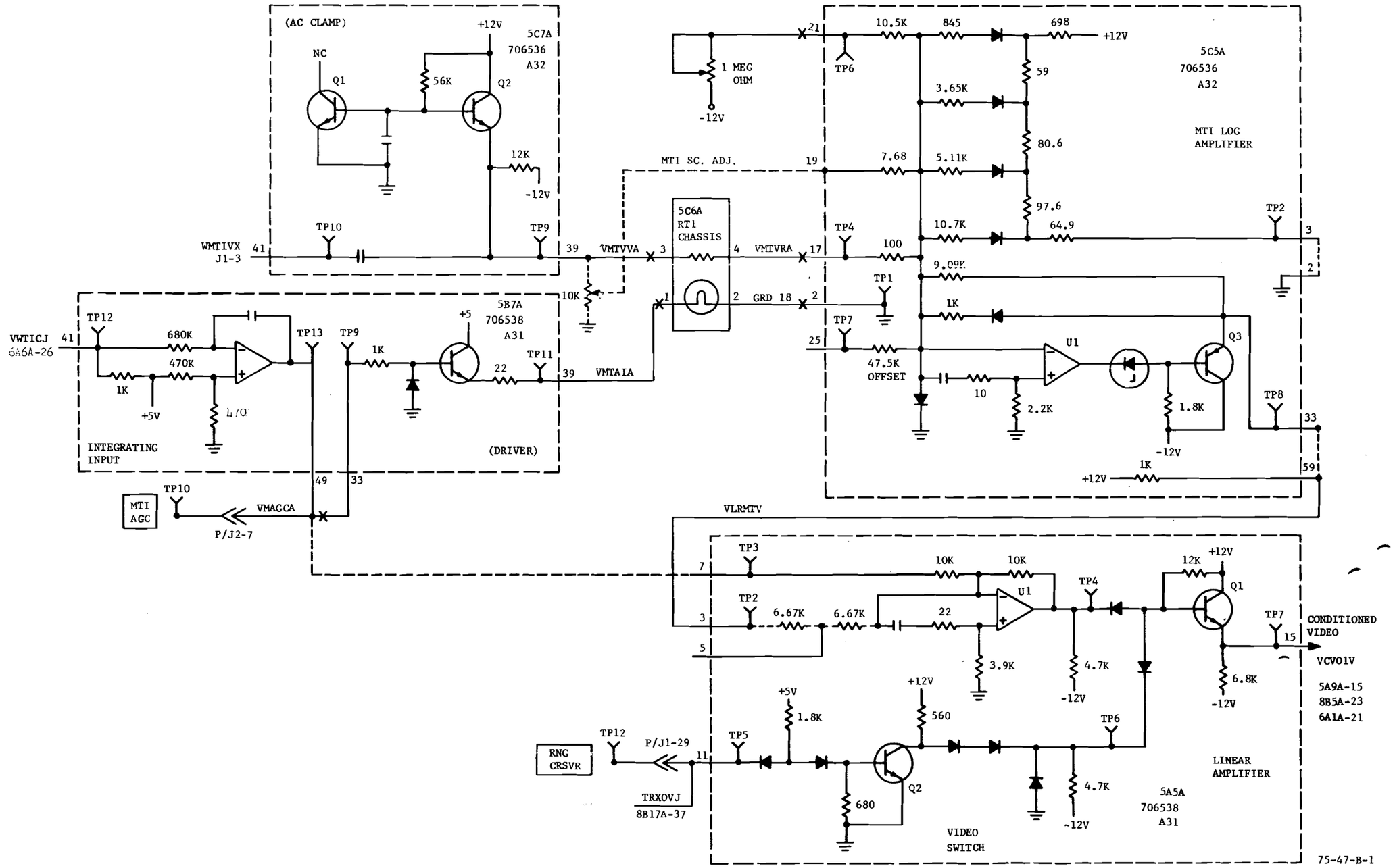

FIGURE B-1. MODIFICATION OF WFMU MTI VIDEO PROCESSING GROUP

APPENDIX C

LOG AND MTI-LOG ALIGNMENT PROCEDURES

Based on a joint effort by representatives of AAF-640, ANA-120, and Tasker Industries, special procedures were developed for the WFMU-200 scaling and alignment. These procedures, detailed herein, include daily and monthly checks for log video as well as daily and monthly checks for the planned MTI-log video. This feature will be available for WFMU processing after modification to the radar interface equipment and the WFMU MTI channel as discussed in appendix B. Upon delivery of the WFMU-200, these procedures will replace the log and MTI procedures presented in the appropriate sections of EEM Handbook 6350.10, change 2, attachment 1, dated 3/5/75. A permanent change and supporting documentation will be included in order 6350.10, chapter 5.

WFMU DAILY CHECK

LOG VIDEO ALIGNMENT.

1. Determine that the WFMU log video input has a signal-to-noise of 4/0.55 $\pm$0.25 volts (mean peak).

2. Adjust the computer display (CD) for a test wedge 8 nmi in duration and a full azimuth within the log video range.

3. Select the MAINTENANCE-OPERATE switch of the WFMU to maintenance.

4. Select the 11.25 AZIMUTH SECTOR IN DEGREES switch to ON.

5. Adjust the WFMU CLUTTER ESTIMATE RANGE switches to correspond to the center of the test wedge.

6. Set the WFMU VIDEO SELECT NORM-TEST LOG-TEST MTI switch to TEST LOG.

7. Adjust the video amplitude control for 2 volts when monitoring test point TEST WEA. The clutter estimate lamps should read 30 dB.

NOTE: The reference amplitude on the scope for the weather test pulse should be such that the top of the thickness of the flat-top trace should exceed the reference amplitude by approximately 25 percent.

8. If clutter lamps read as indicated, check scaling by verifying that the 1- and 3-volt settings of the voltage amplitude control result in clutter estimate readings of 15 $\pm$1 dB and 45 $\pm$1 dB, respectively. Refer to table C-1.

9. If lamp readings are as indicated, skip to item 14.

10. If the clutter estimate lamps read other than 30 dB, verify WFMU scaling at the 1- and 3-volt levels.

TABLE C-1. LOG SCALING

Video in (volts)	Compen Video (volts)	Clutter Estimate Lamp Indication (dB)
0.5	0.60	7.5
1.0	1.19	15.0
1.5	1.79	22.5
2.0	2.38	30.0
2.5	2.98	37.5
3.0	3.57	45.0
3.5	4.17	52.5
4.0	4.75	60.0

11. If the difference in clutter estimate in dB from the 15, 30, and 45 dB values is the same for all three voltage settings, set the voltage amplitude control to 2 volts and adjust the log MDS compensation control to observe 30 dB at the lamps.

12. Skip to item 14.

13. If the clutter estimate lamps at the 1 and 3-volt settings are in error such that the error difference in dB is not the same, the log gain control setting is incorrect. Refer to log video alignment procedure, monthly check.

14. Set threshold 1 and threshold 2 switches for 12 dB.

15. Reduce video amplitude control to zero.

16. Monitor WFMU test point WEA CTR DATA.

17. Slowly increase video amplitude control until full 8-nmi test wedge just appears.

18. At this setting, the clutter estimate lamps should read 12 ±1 dB, and the test wedge should just appear on the RCU display (PPI mode and WTHR switches selected).

19. Set the threshold 1 and threshold 2 switches for 24 dB.

20. Increase the video amplitude control until the 8-nmi test wedge just appears.

21. At this setting, the clutter estimate lamps should read 24 ±1 dB and the test wedge should appear on the RCU display.

22. Position VIDEO SELECT switch to NORM.

23. Select MAINTENANCE-OPERATE switch to OPERATE.

MTI VIDEO ALIGNMENT.

1. Determine that the WFMU MTI video input has a signal-to-noise of 4/0.55 ±0.25 volts (mean peak).

2. Adjust the CD for a test wedge 8 nmi in duration and a full azimuth within the MTI video range.

3. Select the MAINTENANCE-OPERATE switch of the WFMU to maintenance.

4. Select the 11.25 AZIMUTH SECTOR IN DEGREES switch to ON.

5. Adjust the WFMU CLUTTER ESTIMATE RANGE switches to correspond to the center of the test wedge.

6. Set the WFMU VIDEO SELECT NORM-TEST LOG-TEST MTI switch to TEST MTI.

7. Adjust the video signal amplitude control for 2 volts when monitoring the TEST WEA test point. The clutter estimates lamps should read one-half the recorded MTI-log video dynamic range. NOTE: The reference amplitude on the scope for the weather test signal should be such that the thickness of the flat-top trace should exceed the reference amplitude by approximately 25 percent.

8. Set the video signal amplitude control for 1, 2, and 3 volts, respectively, and observe that the clutter estimate lamps, correspondingly, read 1/4, 1/2, and 3/4 of the MTI-log dynamic range recorded at the MTI video input of the WFMU. For example, for an MTI-log dynamic range of 32 dB above MDS, setting the 1-, 2-, and 3-volt levels with the WFMU video signal amplitude control, the clutter estimate lamps should read 8, 16, and 24 dB respectively. Refer to table C-2.

9. If the lamp readings are as indicated, skip to page C-2, item 14 (Log View Alignment).

TABLE C-2. MTI-LOG SCALING

	Receiver Dynamic Range (dB)							
	28		30		32		34	
Video in (Volts)	Video Comp (Volts)	Clutter Est (dB)	Video Comp (Volts)	Clutter Est (dB)	Video Comp (Volts)	Clutter Est (dB)	Video Comp (Volts)	Clutter Est (dB)
1.0	0.56	7.0	0.60	7.5	0.63	8.0	0.17	8.5
1.5	0.83	10.5	0.89	11.0	0.95	12.0	1.01	12.5
2.0	1.11	14.0	1.19	15.0	1.27	16.0	1.35	17.0
2.5	1.39	17.5	1.49	18.5	1.58	20.0	1.68	21.0
3.0	1.67	21.0	1.79	22.5	1.90	24.0	2.02	25.5
3.5	1.94	24.5	2.08	26.0	2.21	28.0	2.35	29.5
4.0	2.22	28.0	2.38	30.0	2.53	32.0	2.69	34.0

10. If the clutter estimate lamps read other than one half dynamic range with a 2-volt test input setting, verify WFMU scaling at the 1- and 3-volt levels.

11. If the difference in clutter estimate in dB from the reference 1/4, 1/2, and 3/4 of the dynamic range is the same for the three corresponding voltage settings, set the voltage signal amplitude control to 2 volts and adjust the MTI MDS compensation control to observe one-half the dynamic range at the lamps.

12. Skip to page C-2, item 14 (Log Video Alignment).

13. If the clutter estimate lamps at the 1- and 3-volt settings are in error such that the error difference in dB is not the same, the MTI GAIN control setting is incorrect. Refer to MTI-log video alignment procedure, monthly check, item D.

WFMU MONTHLY CHECK

PROCEDURES FOR WFMU LOG VIDEO ALIGNMENT AND TRACKING.

1. Adjust WFMU power supply in accordance with page 4-1 of EEM handbook 6350.10, dated 5/3/74.

2. Determine that the log video input to the WFMU consists of a 4-volt signal and 0.55 ±0.25 volt noise mean peak. Refer to radar interface procedure using type FA-8934/2 or FA-8969 equipment.

3. If a selected RF test wedge must be used rather than a 100 μs RF test ring due to operational restrictions, skip to item 9.

4. Provide a 100 μs test ring to modulate an RF generator for insertion into radar directional coupler. This ring should be positioned within the log video range.

5. Select WFMU RANGE BLOCK IN MILES switches to center of test ring.

6. Select CLUTTER ESTIMATE MAINTENANCE-OPERATE switch to MAINTENANCE.

7. Select 5.6 AZIMUTH SECTOR IN DEGREES switch to ON.

8. Skip to item 15.

9. Provide a selected wedge to the WFMU via production common digitizer (CD) and radar equipment as follows:

a. Generate a variable test target from the CD by operation of the following switches on the CD test target generator panel:

TEST TARGETS switch to EXT
Under the variable range test target area
- RADAR switch to ON
- RANGE*
- AZIMUTH START*
- AZIMUTH WIDTH*

*Select range and azimuth based on coordination with center operational personnel.

10. For an AN/FYQ-49 CD, the test target output is available at CD junction box J9 (J8 for AN/FYQ-47).

11. Increase the test target output in width to 100 μs using a pulse generator which connects to the radar directional coupler.

12. Position of the clutter estimate MAINTENANCE-OPERATE switch to OPERATE.

13. Select WFMU RANGE BLOCK IN MILES switches to center of 100 μs as determined by the PCD test target generator start range plus 50 μs.

14. Select WFMU AZIMUTH SECTOR IN DEGREES switches to correspond with the center of the azimuth position selected at the CD test target generator panel (azimuth start plus half of azimuth width).

15. Use the test signal to determine the dynamic range of the log video difference in RF generator attenuation readings between test signal limit level and minimum discernible signal (MDS) when viewing the signal at the log video input to the WFMU.

16. Position the VIDEO SELECT switch to NORM.

17. Ground log AGC.

18. Adjust RF generator attenuation alternately for a signal of 15 and 45 dB above MDS and carefully note the WFMU CLUTTER ESTIMATE in dB lamp values at these positions. Adjust the log gain control so that the difference between the RF generator attenuation above MDS and the CLUTTER ESTIMATE lamp indications at the 15 and 45 dB levels are the same. The RF generator adjustments should be carefully repeated two or three times until the difference between the clutter estimate and the RF generator is within 1/2 dB.

19. Remove ground from log AGC.

20. Readjust the RF generator to 30 dB above MDS.

21. Adjust the log video MDS compensation control until the clutter estimate lights read 30 dB.

22. Record the comparison of the RF generator signal in 5 dB steps (from 5 to 60 dB above MDS) and the corresponding clutter estimate lamp indication. The lights should track within ± 1 dB of the generator signal.

23. At the RF generator 15, 30, and 45 dB levels above MDS, record the amplitude of the RF signal at the WFMU LOG VIDEO test point when the VIDEO SELECT switch is in NORM, and at TEST WEA test point when VIDEO SELECT switch is in TEST LOG. Results at each test point should be 1, 2, and 3 ± 0.08 volts.

24. Remove the RF generator signal. Approximately 3 dB should remain on the lights.

25. When in TEST LOG switch position, insert an 8-mile test weather signal from the CD sector map 1, adjust WFMU voltage signal amplitude control to 1, 2, and 3 volts, and determine that the clutter estimate lamps read, respectively, 15, 30, and 45 ± 1 dB.

26. Continue with daily log video alignment procedure starting with item A14.

PROCEDURES FOR WFMU MTI VIDEO ALIGNMENT AND TRACKING.

1. Determine that the MTI-log video input to the WFMU consists of a 4-volt signal and 0.55 ± 0.25 volt noise mean peak. Refer to radar interface procedure using type FA-8934/2 or FA-8969 equipment, and appendix B.

2. Determine the dynamic range of the MTI-log video, difference in RF generator attenuation readings between test signal limit level and minimum discernible signal (MDS), when viewing the signal at the MTI video input to the WFMU.

3. If a selected RF test wedge must be used rather than a 100 μs RF test ring due to operational restrictions, refer to items 9 through 14 of log video alignment and tracking procedure.

4. Provide a 100 μs test ring to modulate an RF generator for insertion into radar directional coupler. This ring should be positioned within the MTI video range and be adjusted to represent an optimum speed target.

5. Select WFMU RANGE BLOCK IN MILES switches to center of test ring.

6. Select CLUTTER ESTIMATE MAINTENANCE-OPERATE switch to MAINTENANCE.

7. Select 5.6 AZIMUTH SECTOR IN DEGREES switch to ON.

8. Ground MTI AGC.

9. Determine the RF generator 1/4 and 3/4 reference attenuation levels over the MTI-log dynamic range. For example, if the MTI-log dynamic range is 32 dB above MDS, the levels of interest become 8 and 24 dB above MDS.

10. Alternately adjust these RF generator attenuation levels and carefully note the WFMU CLUTTER ESTIMATE in dB lamp values at these positions.

11. Adjust the MTI gain control so that the difference between RF generator attenuation above MDS and the clutter estimate lamp indications at the reference 8 and 24 dB levels are the same.

12. The RF generator adjustments should be carefully repeated 2 or 3 times until the difference between the clutter estimate and the RF generator readings is within 1/2 dB.

13. Remove ground from MTI AGC.

14. Readjust the RF generator to 16 dB above MDS (1/2 the dynamic range).

15. Adjust the MTI MDS compensation control until the clutter estimate lights read 16 dB.

16. Record the RF generator signal in 5 dB steps (from 5 to 30 dB above MDS) and the corresponding clutter estimate lamp indication. The lights should track within ± 1 dB of the generator signal.

17. At the RF generator 8, 16, and 24 dB levels above MDS, record the amplitude of the RF signal at the WFMU MTI VIDEO test point when the VIDEO SELECT switch is in NORM, and at TEST WEA test point when VIDEO SELECT switch is in TEST MTI. Results at each test point should be 1, 2, and 3 ± 0.08 volts.

18. Remove the RF generator signal. Approximately 3 dB should remain on the lights.

19. When in TEST MTI switch position, insert an 8-nmi test weather signal from the CD sector map 1, adjust WFMU voltage signal amplitude control to 1, 2, and 3 volts, and determine that the clutter estimate lamps read, respectively, the representative 8, 16, and 24 ± 1 dB.

20. Continue alignment procedure starting with page C-2, item 14 (Log Video Alignment).

APPENDIX D

MTI AGC REGULATION

An assessment of the MTI AGC regulation of the modified WFMU was established by conducting a series of MTI clutter estimate accuracy tests over a range of video inputs, at three separate noise count thresholds, and at various scaling adjustments to represent different MTI receiver dynamic ranges. A summary of the MTI clutter estimate accuracy (lamp indication), with ± 2 dB and ± 1 dB of the theoretical estimate, acquired from measurements at Elwood, N.J., and White House, Florida, is presented in tables D-1 and D-2, respectively.

TABLE D-1. SUMMARY OF MTI CLUTTER ESTIMATE ACCURACY MEASUREMENTS (ELWOOD MODIFIED WFMU)

MTI Video In (Volts)	Theoretical Clutter Est (dB)	Theoretical/Observed +2 dB			MTI Clutter Est (Percent)* +1 dB		
		MTI Noise Count Threshold					
		64	32	16	64	32	16
	(Scaled for MTI receiver with 21 dB dynamic range)						
1.0	9.0	100	100	100	100	81.8	94.7
1.5	12.5	100	100	100	85.7	45.5	100
2.0	15.0	100	100	80.7	100	75	50
2.5	17.0	100	100	100	85.7	92.3	35.7
3.0	18.5	100	100	71.4	84.6	90.9	0
3.5	20.0	100	100	25	100	73.3	0
	(Scaled for MTI receiver with 22 dB dynamic range)						
1.0	10.0	100		100	100		58.8
1.5	13.5	100		36.8	100		10.5
2.0	16.0	100		36.4	84.2		10.5
2.5	18.0	100		84.2	100		94.1
3.0	19.5	100		100	100		100
3.5	21.0	100		100	94.7		93.8
	(Scaled for MTI receiver with 24 dB dynamic range)						
1.0	12.0	100		100	86.7		88.2
1.5	15.5	100		100	88.2		82.4
2.0	18.0	100		100	100		100
2.5	20.0	88.9		100	22.2		100
3.0	21.5	31.3		100	6.3		88.2
3.5	23.0	56.3		100	6.3		84.2
	(Scaled for MTI receiver with 26 dB dynamic range)						
1.0	14.0	100		100	93.8		100
1.5	17.5	100		100	68.4		100
2.0	20.0	100		100	100		100
2.5	22.0	100		100	52.4		100
3.0	23.5	73.3		100	0		72.2
3.5	25.0	26.3		100	0		50
	(Scaled for MTI receiver with 28 dB dynamic range)						
1.0	16.0	100		100	84.2		100
1.5	19.5	100		100	47.4		100
2.0	22.0	100		100	90.0		76.2
2.5	24.0	100		100	94.4		52.9
3.0	25.5	23.5		26.3	17.6		5.3
3.5	27.0	0		0	0		0

*Over 10 clutter estimate sample observations for each condition.

TABLE D-2. SUMMARY OF MTI CLUTTER ESTIMATE ACCURACY MEASUREMENTS (WHITE HOUSE MODIFIED WFMU)

MTI Video In (Volts)	Theoretical Clutter Est (dB)	Theoretical/Observed +2 dB			MTI Clutter Est (Percent)* +1 dB		
		MTI Noise Count Threshold					
		64	32	16	64	32	16
	(Scaled for MTI receiver with 22 dB dynamic range)						
1.0	10.0	100	100	100	85.7	50	100
1.5	13.5	100	100	100	100	100	100
2.0	16.0	100	100	100	100	100	100
2.5	18.0	100	100	100	100	100	100
3.0	19.5	100	100	100	100	100	83.3
3.5	21.0	100	100	100	100	100	0

*Over 10 clutter estimate lamp sample observations for each condition.

GLOSSARY

CLUTTER - Precipitation echoes consisting of all forms of water particles detected by radar and processed by the WFMU.

CLUTTER ESTIMATE - Clutter returns (converted into a 6-bit digital word every 1/4 nmi) average in range in four 1/4-nmi increments, and weighted in azimuth (1/2 old filter work plus 1/2 new range averaged word) over approximately four radar sweeps for azimuth smoothing.

THRESHOLD LEVEL - A switch selectable dc voltage representing a dB level which must be exceeded by weather signals before the WFMU will provide output information.

CIRCULAR POLARIZATION COMPENSATION - A dc offset voltage adjustment which modifies the effective selectable threshold switch setting over the full WFMU processing range to compensate for radar degradation when in the circular polarization mode.

MTI COMPENSATION - A dc offset voltage adjustment which modifies the effective selectable threshold switch setting over the MTI processing range of the WFMU to compensate for the relative attenuation of weather signal returns introduced by MTI video.

MDS COMPENSATION - A dc voltage adjustment in the Log and MTI-Log AGC noise sensing circuits to permit tracking of the WFMU with the RF signal input.

SCALING - An alignment procedure (appendix C) using the WFMU Log and MTI-Log gain controls and the WFMU MDS Compensation controls to assure test signal tracking (in dB) of the WFMU with the RF signal input within the limit of the receiver dynamic range.

AIRCRAFT BREAKTHROUGH - A feature which prevents strong aircraft target returns from WFMU processing by inhibiting weather contour data for an adjustable period when activated by a radar target with a fast rise time.

WFMU AZIMUTH RESOLUTION - A pattern of range and azimuth reporting intervals where weather returns may be processed by the WFMU provided that the weather signal strength (in dB) exceeds the threshold settings selected. A detailed presentation of the azimuth resolution pattern, along with range and azimuth transmission intervals, is shown in table 1 and figures 5 and 6.