COPY 1

FAA-RD-76-76-II

FAA WJH Technical Center
00093051

AIRCRAFT CONFIGURATION NOISE REDUCTION

VOLUME II
Computer Program User's Guide and Other Appendices

NAFEC
LIBRARY
SEP 20 '76

D6-42849-2
June 1976

FINAL REPORT

FAA WJH Technical Center
Tech Center Library
Atlantic City, NJ 08405

Document is available to the public through
the National Technical Information Service,
Springfield, Virginia 22151.

Prepared for

U.S. DEPARTMENT OF TRANSPORTATION
FEDERAL AVIATION ADMINISTRATION
Systems Research & Development Service
Washington, D.C. 20590

NOTICE

This document is disseminated under the sponsorship of the Department of Transportation in the interest of information exchange. The United States Government assumes no liability for its contents or use thereof.

TECHNICAL REPORT STANDARD TITLE PAGE

1. Report No. FAA-RD-76-76-II	2. Government Accession No.	3. Recipient's Catalog No.
4. Title and Subtitle AIRCRAFT CONFIGURATION NOISE REDUCTION Vol. II: Computer Program User's Guide and Other Appendices		5. Report Date June 1976
		6. Performing Organization Code
7. Author(s) D. G. Dunn, D. J. Cecil, L. M. Butzel, J. M. Campbell, H. Y. Lu, C. H. Berman, and L. Filler		8. Performing Organization Report No. D6-42849-2
9. Performing Organization Name and Address Boeing Commercial Airplane Company P.O. Box 3707 Seattle, Washington 98124		10. Work Unit No.
		11. Contract or Grant No. DOT-FA74WA-3497
12. Sponsoring Agency Name and Address Federal Aviation Administration 800 Independence Avenue S.W. Washington, D.C. 20591		13. Type of Report and Period Covered Contractor Final Report (August 1974–June 1976)
		14. Sponsoring Agency Code

15. Supplementary Notes

H. C. True, DOT/FAA Technical Monitor

16. Abstract

This report discusses use of wing and fuselage structures as noise barriers for shielding aircraft engine noise from the community. The report concerns use of favorable aircraft configurations for community noise reduction of turbojet and turbofan powered aircraft. Significant noise reduction potential is illustrated on a hypothetical engine-over-wing (EOW) configuration using high bypass ratio turbofan engines. Noise shielding estimation procedures are developed for two types of configuration noise reduction concepts; i.e., the EOW and the engine-over-fuselage (EOF).

Results are described for a theoretical analysis, a major Boeing/Aeritalia test program, and an empirical analysis of test data. As a result, analytical prediction procedures are defined, computerized, and added to the software previously developed under NASA contract NAS2-6969. The shielding prediction procedures consider individual noise components; inlet fan, compressor, exit fan, core, turbine, and jet noise. A new source, jet/edge interaction noise, can also be predicted using the procedures. The collective software, incorporating the shielding package of this report, can be used to estimate community noise levels of wing and fuselage shielded turbofan or turbojet noise.

This report is presented in three volumes. Volume I contains the engineering analysis. Volume II contains a User's Guide for computer programs and other appendices. Volume III contains the complete computer program listing.

17. Key Words Noise reduction, Noise suppression, Wing shielding, Fuselage shielding, Diffraction, Refraction, Scattering, Community noise, Fan noise, Core noise, Turbine noise, Jet noise, Jet/edge noise		18. Distribution Statement Document is available to the public through the National Technical Information Service, Springfield, Virginia 22151.

19. Security Classif. (of this report) Unclassified	20. Security Classif. (of this page) Unclassified	21. No. of Pages 138	22. Price

Form DOT F 1700.7 (8-69)

METRIC CONVERSION FACTORS

Approximate Conversions to Metric Measures

Symbol	When You Know	Multiply by	To Find	Symbol
		LENGTH		
in	inches	*2.5	centimeters	cm
ft	feet	30	centimeters	cm
yd	yards	0.9	meters	m
mi	miles	1.6	kilometers	km
		AREA		
in^2	square inches	6.5	square centimeters	cm^2
ft^2	square feet	0.09	square meters	m^2
yd^2	square yards	0.8	square meters	m^2
mi^2	square miles	2.6	square kilometers	km^2
	acres	0.4	hectares	ha
		MASS (weight)		
oz	ounces	28	grams	g
lb	pounds	0.45	kilograms	kg
	short tons (2000 lb)	0.9	tonnes	t
		VOLUME		
tsp	teaspoons	5	milliliters	ml
Tbsp	tablespoons	15	milliliters	ml
fl oz	fluid ounces	30	milliliters	ml
c	cups	0.24	liters	l
pt	pints	0.47	liters	l
qt	quarts	0.95	liters	l
gal	gallons	3.8	liters	l
ft^3	cubic feet	0.03	cubic meters	m^3
yd^3	cubic yards	0.76	cubic meters	m^3
		TEMPERATURE (exact)		
°F	Fahrenheit temperature	5/9 (after subtracting 32)	Celsius temperature	°C

*1 in = 2.54 (exactly). For other exact conversions and more detailed tables, see NBS Misc. Publ. 286, Units of Weights and Measures, Price $2.25, SD Catalog No. C13.10:286.

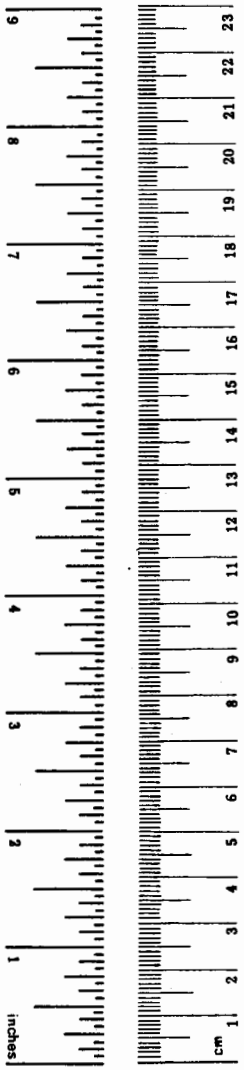

Approximate Conversions from Metric Measures

Symbol	When You Know	Multiply by	To Find	Symbol
		LENGTH		
mm	millimeters	0.04	inches	in
cm	centimeters	0.4	inches	in
m	meters	3.3	feet	ft
m	meters	1.1	yards	yd
km	kilometers	0.6	miles	mi
		AREA		
cm^2	square centimeters	0.16	square inches	in^2
m^2	square meters	1.2	square yards	yd^2
km^2	square kilometers	0.4	square miles	mi^2
ha	hectares (10,000 m^2)	2.5	acres	
		MASS (weight)		
g	grams	0.035	ounces	oz
kg	kilograms	2.2	pounds	lb
t	tonnes (1000 kg)	1.1	short tons	
		VOLUME		
ml	milliliters	0.03	fluid ounces	fl oz
l	liters	2.1	pints	pt
l	liters	1.06	quarts	qt
l	liters	0.26	gallons	gal
m^3	cubic meters	35	cubic feet	ft^3
m^3	cubic meters	1.3	cubic yards	yd^3
		TEMPERATURE (exact)		
°C	Celsius temperature	9/5 (then add 32)	Fahrenheit temperature	°F

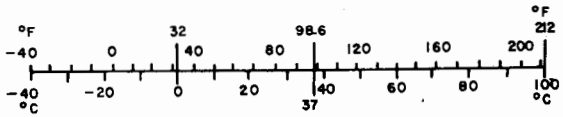

PREFACE

This is one of three volumes of the final report on "Aircraft Configuration Noise Reduction" submitted by the Boeing Commercial Airplane Company, Seattle, Washington, 98124, in fulfillment of Department of Transportation contract DOT-FA74WA-3497, dated 1 August 1974. This work was completed for the ATC Airport Facilities section of the Federal Aviation Administration (DOT). Mr. H. C. True was the Contract Technical Monitor.

The report is divided into three volumes for easy use as shown below:

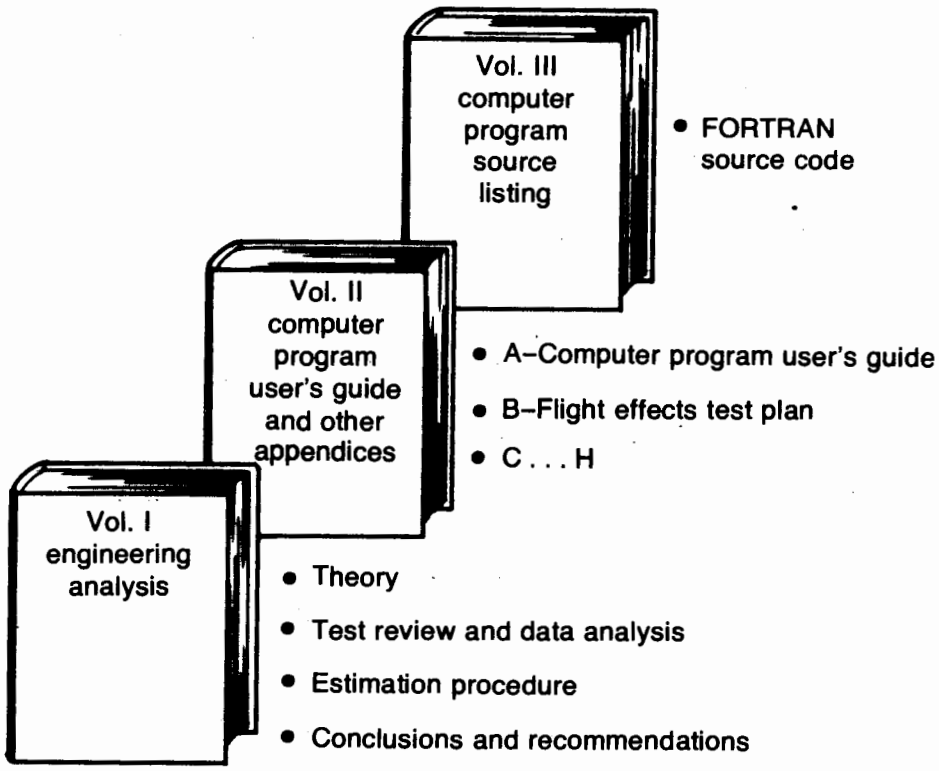

This report is volume II of the series and was prepared jointly by the Noise Technology Staff of the Boeing Commercial Airplane Company and the Noise Systems Group of Boeing Computer Services, Inc. This volume contains:

- The user's guide for the computer software of the "Aircraft Configuration Noise Reduction" study.
- A preliminary test plan for assessing forward velocity effects on wing and fuselage shielding.
- Various curves, derivations, and background theory in support of material presented in volume I.

CONTENTS

Page

APPENDIX A–FAA-Aircraft Noise Source Computer Program User's Guide 1
1.0 Summary 1
2.0 Introduction 2
3.0 Interface With NAS2-6969 Contract Software 5
3.1 Wing Shiedling Package 5
3.2 Calculation Sequence 5
3.2.1 Exit Fan, Core, and Turbine Noise Component 15
3.2.2 Inlet Fan or Compressor Noise Component 15
3.2.3 Jet Noise Component 15
3.2.4 Jet/Edge Interaction Noise Component 15
4.0 Input Data 18
4.1 General Data Parameters ($GDATA Input Data Set) 20
4.2 Engine/Wing Geometry ($EWDATA Data Set) 27
4.3 Noise Component Parameters ($NOISIN Input Data Sets) 29
4.3.1 Lining Attenuation and Configuration Corrections 30
4.3.2 Primary Jet Noise and Primary Plus Secondary Jet Noise 33
4.3.3 Core and Turbine Noise 35
4.3.4 Compressor, Fan Inlet, and Fan Exit Noise 37
4.3.5 Augmentor Wing Noise 39
4.3.6 Blow Flap Noise 40
4.3.7 Lift Fan Noise 41
4.3.8 Ejector-Suppressor Noise 42
4.3.9 Propeller Noise 43
4.3.10 Helicopter, Propeller, and Tilt Rotor Noise 44
4.3.11 Measured Data Input 45
4.3.12 Jet/Edge Interaction Noise 47
4.4 Noise Component Shielding Parameters ($SHLDAT Input Data Set) 48
5.0 Output Data 54
5.1 Sample Case Description 55
5.1.1 Input 55
5.1.2 Output 56
5.2 Sample Input 57
5.3 Sample Output 58
6.0 Machine Requirements 72
7.0 Operating System 72
8.0 Resource Estimates 73
9.0 Diagnostics 74
10.0 Control Cards 75
11.0 Source Listing 82

CONTENTS–(Concluded)

Page

APPENDIX B–Preliminary Test Plan for Assessment of Forward Velocity Effects on the Shielding Effectiveness of Wing- and Body-Type Acoustic Barriers 83
1.0 Summary 83
2.0 Introduction 83
3.0 Test Objectives 84
4.0 Test Approach 84
5.0 Test Procedure 88
6.0 Test Configurations 90
7.0 Acoustic Instrumentation and Data Reduction 93
8.0 Data Analysis 96
9.0 Schedule and Cost Estimate 96

APPENDIX C–Uniform Flow Effects on Half-Plane Diffraction 99

APPENDIX D–Theoretical Data Curves for Cylinder Diffraction 105

APPENDIX E–Sound Refraction by Airfoil Trailing Wake 119
1.0 Analysis 119
2.0 Far-Field Solution and the Transmission Coefficient 124
3.0 Notes on Expression for a_1, a_3 and Stationary Phase Wave Numbers 125

APPENDIX F–Spatial Averaging Factor I 127

APPENDIX G–Spectrum Shape Factor for Jet/Edge Interaction Noise 129

APPENDIX H–Relative Velocity Scaling in Jet/Edge Interaction Noise 131

FIGURES

No.		Page
A-1	Macro Flow Chart of the Executive Routine– Showing Integration of Noise Components	6
A-2	General Overlay Structure	9
A-3	Routine SHLDSP to Interface NAS2-6969* With Wing Shielding Calculation Module (SHATTN)	11
A-4	Jet Noise Component Logic Flow of Jet	12
A-5	Calculation Sequence in Wing Shielding Module SHATTN*	13
A-6	Calculation Sequence Jet Noise Shielding (JNSA)*	14
A-7	General Logic Flow of Noise Components– Aft Fan, Core, and Turbine, and Inlet Fan	16
A-8	Jet Edge Interaction Noise Component Logic Flow*	17
A-9	Engine/Wing Geometry	28
A-10	Empirical Adjustments to Jet Refraction Theory for Apparent Source Position	50
A-11	Unshielded SPL Directivity Curves for High Bypass Ratio Turbofans	53
B-1	Tunnel Acoustic Survey Results (53 m/s)	85
B-2	General Test Hardware Arrangement in Wind Tunnel	86
B-3	Configuration Schematics	91
B-4	Acoustic Test Instrumentation and Data Reduction	94
B-5	Schematic of Acoustic Data Processing System (ADP-1)	95
C-1	Illustration of Reciprocity Theorem as Related to Diffraction Problems	100
D-1	Noise Diffraction About a Fuselage	106
D-2	Noise Diffraction About a Fuselage	107
D-3	Noise Diffraction About a Fuselage	108
D-4	Noise Diffraction About a Fuselage	109
D-5	Noise Diffraction About a Fuselage	110
D-6	Noise Diffraction About a Fuselage	111
D-7	Noise Diffraction About a Fuselage	112
D-8	Noise Diffraction About a Fuselage	113
D-9	Noise Diffraction About a Fuselage	114
D-10	Noise Diffraction About a Fuselage	115
D-11	Noise Diffraction About a Fuselage	116
D-12	Noise Diffraction About a Fuselage	117
D-13	Noise Diffraction About a Fuselage	118
E-1	Model for Sound Refraction Through Wing Trailing Wake	121

TABLES

No.		Page
A-1	Engineering/Programming Document Cross Reference	19
A-2	User Supplied Information	77
A-3	Computer Job to Save Relocatable Binaries on Disk From Program Library Tape	78
A-4	Computer Job to Execute Noise Source Estimation Program	79
A-5	Computer Job to Execute Postprocessor Program	80
A-6	Computer Job to Execute Noise Contour Estimation Program	81
B-1	Test Matrix	89
B-2	Schedule and Cost Estimates	97
D-1	Cross Reference of Trend Figures and Variables (B, θ)	105

APPENDIX A

FAA-AIRCRAFT NOISE SOURCE COMPUTER PROGRAM USER'S GUIDE

D. G. Dunn, D. J. Cecil, and L. M. Butzel

1.0 SUMMARY

This appendix is intended to serve as a user's guide to the integrated system of computer programs developed in accordance with the requirements of contract DOT-FA74WA-3497. The computer software for the estimation procedures of flyover noise time histories developed under contract NAS2-6969 has been used where compatible, thus, retaining the consistency in the input description found in NASA CR114650, "Aircraft Noise Source and Contour Computer Programs User's Guide." Moreover, since the computer program is an extension of the program developed under contract NAS2-6969, this appendix may be considered as an updated version of sections 1.0, 2.0, and 3.0 of NASA CR114650, structured within the requirements of contract DOT-FA74WA-3497. For convenient use the additions necessary to incorporate the effects associated with the shielding of noise sources near a wing surface are indicated.

Illustrations provided in the form of macro flow charts show the computer software developed under DOT-FA74WA-3497 and its linkage to that of contract NAS2-6969. Sample cases of input data are included with a limited sample output to assist the user in the use of the program. The programs are stored on magnetic tape and are written in FORTRAN IV for the FTN compiler to run on a CDC or CYBER computer, operating under the KRONOS 2.1 operating system.

2.0 INTRODUCTION

The computer program developed under contract DOT-FA74WA-3497 simulates a procedure based on theoretical and empirical acoustical models for the estimation of the installation effects on the radiated far field flyover noise emitted from a full scale jet engine. Thus, the program can be used to evaluate the total noise reduction due to the installation of a noise component source (inlet fan, exit fan, core, turbine, or jet) in the proximity of a noise shielding surface.

The principle considerations of storage, input and output incorporated in the design of the original noise estimation program developed under contract NAS2-6969 have been affected by the new additional computer software developed for the present contract as follows.

1. The program structure has remained a two level overlay with the primary level controlling the reading in of all the input, printout of all the output, and linkage to the secondary level. The secondary level includes in addition to the subroutines for flight geometry calculations, extrapolation corrections, and noise component prediction, new packages for computing the sound attenuation due to wing shielding of jet and turbomachinery noise sources. The resultant increase in program size from NAS2-6969 is approximately 15%.

2. The NAMELIST statement is also used for the additional input data; i.e., the engine wing geometry data, the noise component shielding parameters, jet edge interaction data and jet noise shielding data. The characteristics of NAMELIST provide the convenience of updating the data set from case to following case by simply specifying only the single or array variables that need be changed.

3. Output is printed per case (a case is all data for a maximum of three engine configurations per aircraft) with options on the type of output information desired. The format and details of the output are identical to that of NAS2-6969 with the addition of engine/wing geometry data per configuration, wing shielding data and predicted corrections for shielding in each noise component.

The general procedural steps for processing data in the estimation of noise including installation effects are largely a function of the order of noise component inputs which are dependent on the engine (source) configurations for a set of aircraft conditions (i.e., a case).

These aircraft conditions together with information pertinent to the current case (described under general data parameters) are the first set of data input to the program for a case. The primary of executive overlay initiates the flight path/observer geometry and extrapolation corrections overlay, to calculate the aircraft coordinates, the sound propagation distance and, the sound transmission time for each observer position for the 17 angles (10°, 20°, . . . 170°) between the flight path and a line to the observer. Extrapolation corrections including sound attenuation due to spherical divergence, atmospheric absorption, extra-ground attenuation, and ground reflection are

accumulated in an array (array size = number of spectra bands times 17 aircraft positions times the number of observer positions) used for extrapolating the index spectra of each noise component and the total index spectra.

If shielding is indicated in the general data parameters for the particular engine configuration, then the engine/wing geometry data for that configuration must be input for use in the engine/edge geometry of the wing shielding package.

From hereon, until the next case, there could be up to three engine configurations where the inputs for each configuration relate to the particular noise components making up the configuration. Data for each configuration consist of a title card folled by data for each selected noise component, followed by wing shielding data for the noise component if shielding is indicated for the particular noise component. If more than one case is to be input, then it is mandatory that the order and number of noise components in each engine configuration be maintained for all cases. After each noise component data and associated shielding data is read in, the executive module links the corresponding overlay.

For engine-over-wing (EOW) configured aircraft, the noise source components of relevance are primary and secondary jet, core, turbine, and inlet and exit fan. Considering these noise sources, computation modules are provided to execute with some variations the following sequential computation steps.

a. Calculation of the directivity angles, the projected directivity angles and the projected elevation angles for each sideline observer position and noise component

b. Calculate lining attenuation spectra if applicable

c. Calculate noise prediction spectra without effects of shielding

d. Compute free-field index spectra

e. Include multiengine effects

f. Convert spectra to full octave, if applicable

g. Calculate attenuation due to shielding

h. Sum configuration effects, attenuation due to shielding, and subtract the results from the bare-engine index spectra

i. Compute total free-field noise spectra

j. Subtract extrapolation corrections from free-field index spectra

k. Compute human response measures; i.e., perceived noise level (PNL), tone corrected PNL, and effective PNL

l. Save the index and observed sound spectra on scratch data files

After all noise components for all the configurations in a case have been processed, the total free-field index spectra are extrapolated and the human response measures are calculated based on the total extrapolated spectra. Depending on input specifications for the output reports desired, information on the scratch data files is printed. The program will continue to process input data until there are no more cases; i.e., the program terminates execution whenever an end-of-record, end-of-file, or end-of-information code is encountered on the input file.

3.0 INTERFACE WITH NAS2-6969 CONTRACT SOFTWARE

The interface of the original NAS2-6969 contract computer software with the new software developed for contract DOT-FA72WA-3497 has resulted in minor modifications of the original software. These modifications are mainly, but not exclusively limited to the noise source component modules effected by shielding and, the executive routine. The interface is structured so that all references to wing shielding can be completely excluded, thus retaining the external operational characteristics of the NAS2-6969 contract software.[1] Figures A-1 and A-2 (similar to fig. 1 and 3 of NASA-CR-114650) illustrate the overall structure of the noise prediction program including interface, additional input and output, and noise source component modules influenced by wing shielding. Figure A3 is a macro flow chart of the subroutine SHLDSP, which interfaces NAS2-6969 software with the evaluation of turbomachinery noise shielding effects. That is, noise source prediction modules INLET FAN, EXIT FAN, CORE, and TURBINE are linked with the wing shielding module SHATTN, through the routine SHLDSP which returns shielded SPL spectra at flight index conditions for each of the turbomachinery noise component estimation modules. The total programming addition to NAS2-6969 generates an increase in program field length of approximately 15%.

Jet noise shielding modules for the primary and primary plus secondary jet noise sources are made up of the subroutines JNSA and JNSASP. The shielding noise attenuation is returned to the jet noise source prediction module, JET (fig. A-4).

3.1 WING SHIELDING PACKAGE*

The wing shielding package may be considered a system of computer programs designed to simulate a method of quantitatively estimating the flyover noise reductions attainable from engine placement in the proximity of wing structures which provide shielding. The package of computer programs to predict shielded noise is common to engine component noise sources fan (inlet and exit), core, and turbine, (see fig. A-2 and A-5). The jet noise source component (primary and secondary) is treated separately with its own special shielding programs (see fig. A-2 and A-6).

3.2 CALCULATION SEQUENCE

Figure A-5 is an outline of the subtasks that contain the sequence of calculations to determine wing shielding attenuation. The module SHATTN and its externals are common to noise source components turbine, core, inlet and exit fan. The module linking SHATTN to the noise components of NAS2-6969 is the interface routine SHLDSP as shown in figure A-3. The calculation sequence for determining jet noise shielding is shown in figure A-6; the linkage to the noise component through JNSA is shown in figure A-4.

---

[1]New additions to contract NAS2-6969 software due to FAA contract DOT-FA74WA-3497 such as subroutines, data or data sets are indicated with an *, and software with only pertinent modifications is indicated with an **.

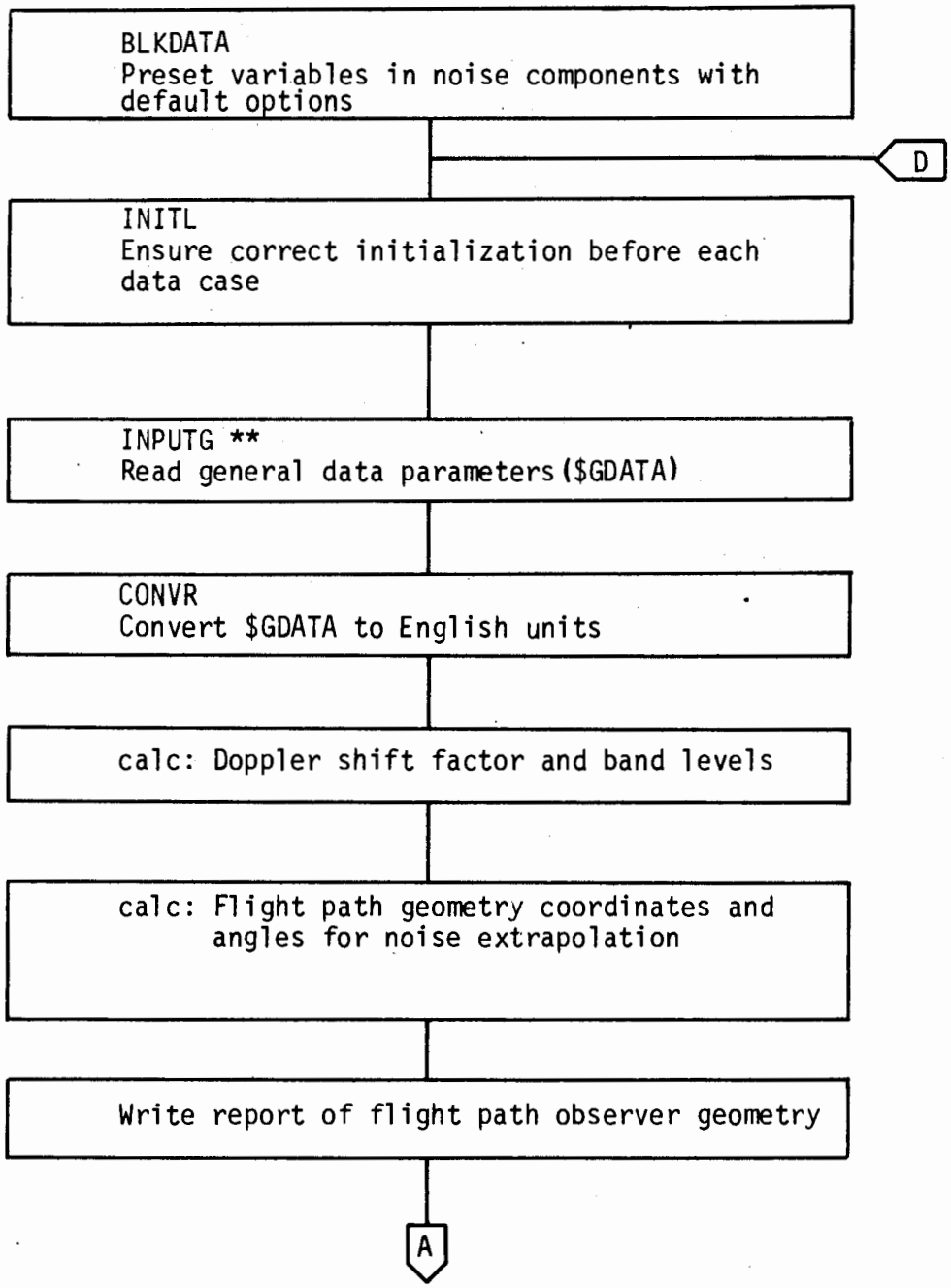

Figure A-1.—Macro Flow Chart of The Executive Routine—Showing Integration of Noise Components

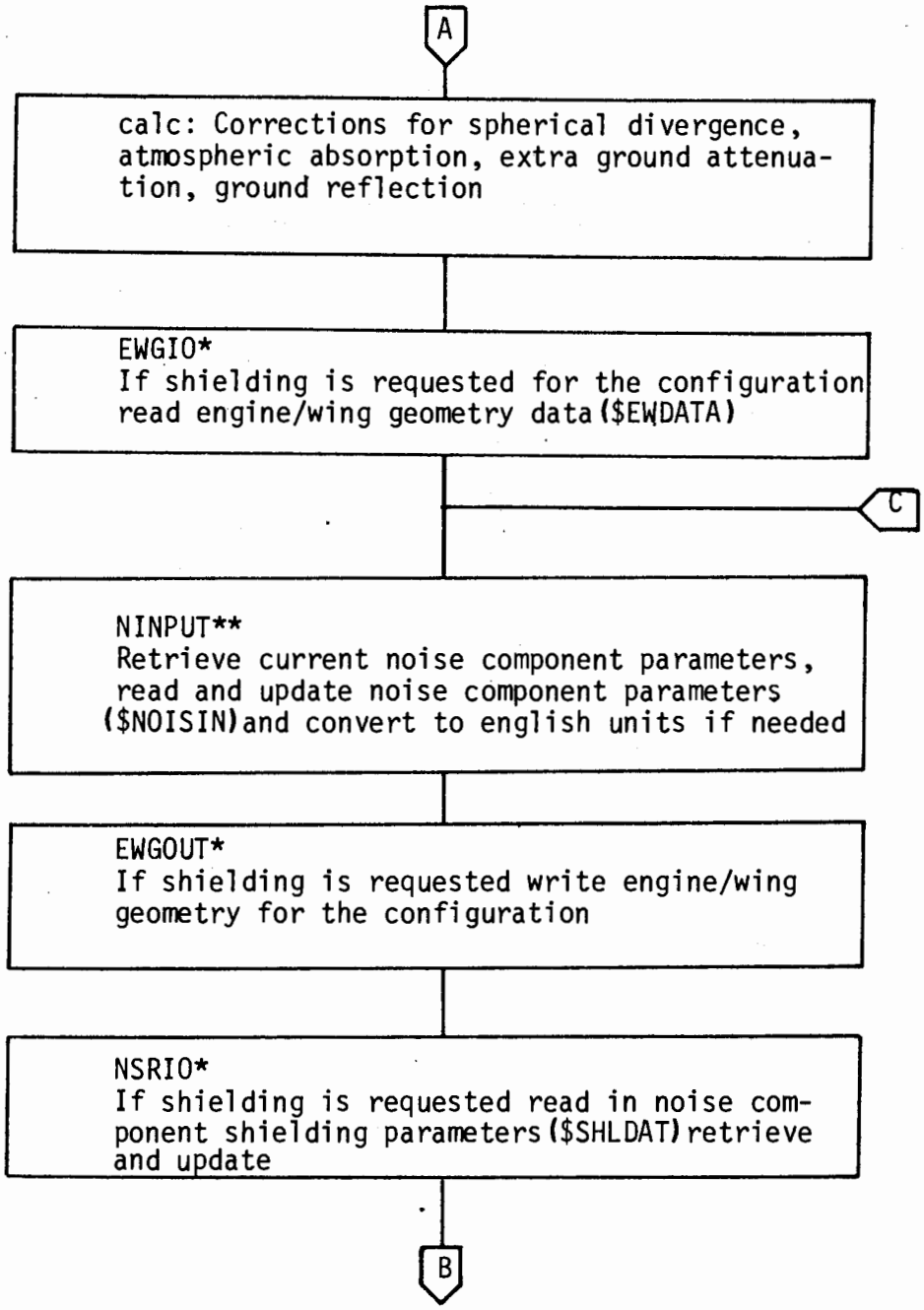

Figure A-1.—(Continued)

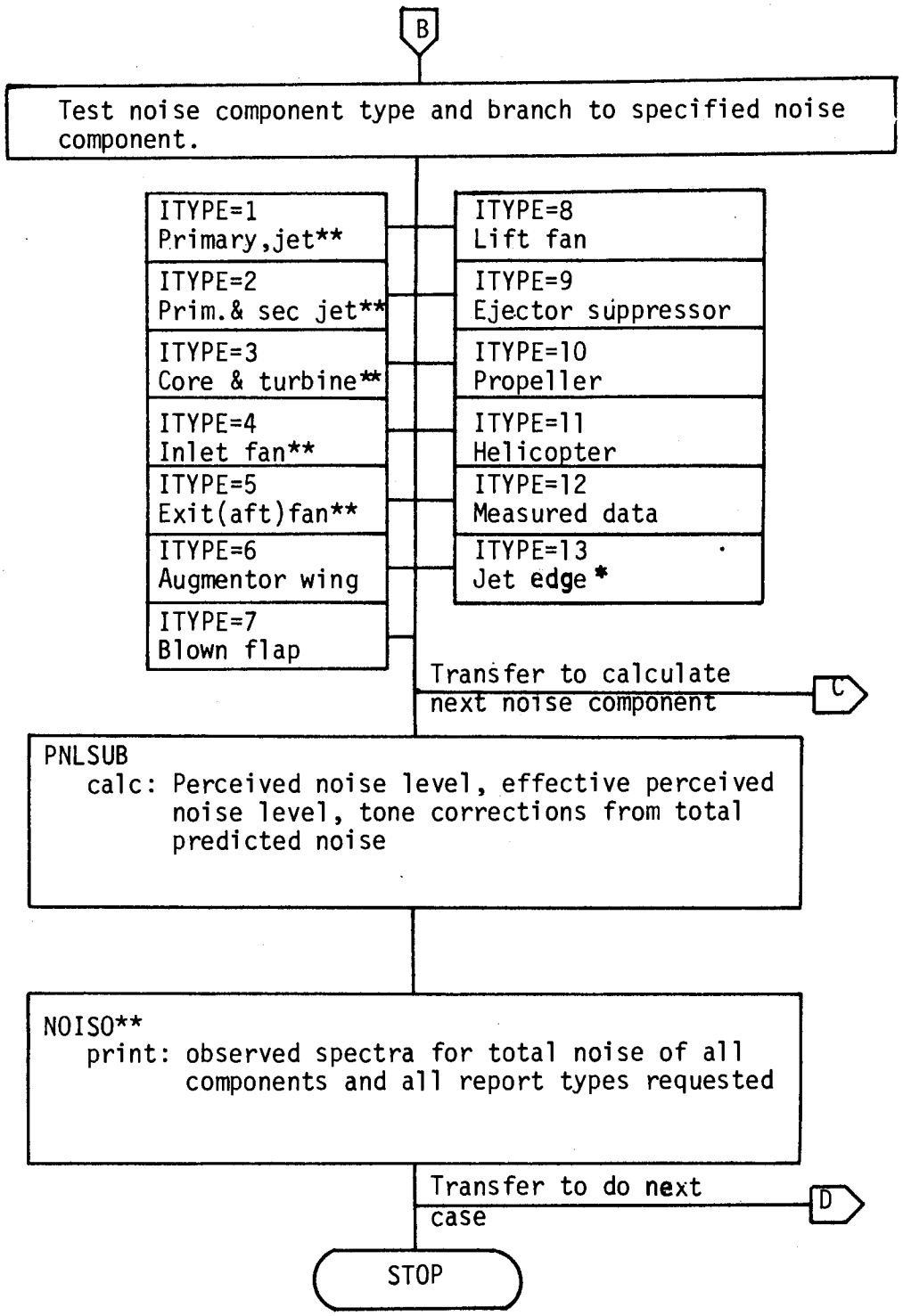

Figure A-1.—(Concluded)

FL[a] = 0B to 105136B

OVERLAY 0 (Main Overlay Program TEE330A)**

Purpose:	Routines called:				
o Initialization o Input/Output o S.I. or English unit conversion	ABSORP	ANGLES	CONVR	CORSPL**	EPNLI
	ERROR	EWGIO*	EWGOUT*	FAAISO	INITL
	INPUTG**	LININS	NINPUT**	NOISO**	NSRIO*
	PNDB4	PNLSUB	PRINTH	PRTSH1*	SN
	SEARCH	TBLU1	TBLU2	TERP1	TERP2
	TONCOR	TONES3	WRPNL	WSDSTO*	XPM1DX
o Calls Overlays 1, 2, ... or 6					

FL[a] = 105137B to 112756B

OVERLAY 1 (Secondary Overlay Program ONE)

Purpose:	Routines called:			
o Subroutine FLTGEO solves flight geometry and determines atmospheric properties.	ATMOSP	ERROR	SORTX	TBLU1
o Subroutine NEXTCR calculates spherical divergence attenuation, atmospheric absorption, extra ground attenuation, and ground reflection interference corrections.	AVGALF	ABSORP	EGACAL	GRDRFX
	ATMOSP	CPOLAR	DPSD	FW
	TBLU1			

FL[a] = 105137B to 141024B

OVERLAY 2 (Secondary Overlay Program TWO)**

Purpose:	Routines called[b]:			
o Subroutine AFT** calculates exit fan noise component o Subroutine INLET** calculates inlet noise component	BUZSAW	CFI*	CPOLAR	EDGEDI*
	EEGEOM*	EOGEOM*	ESHLDG	FANNOS
	FANPED	REFRACT*	RESCAL	SDSPLP*
	SHATTN*	SHELL	SHELXH	SHLDSP*
	UNIFLW*	UNIT	VECN*	DOTP*
	CROSP*	WSHOUT*	ZERO	
o Subroutine JET** calculates jet noise component	ESHLDG	JETNOS	JETPED	JNSA*
	JNSASP*	TBLU2	TBLU3	TERP2
	TERP3	UNIT	ZERO	

a) Field length (FL) noted includes system routines.
b) All noise source component modules also call the following routines in addition to those noted in the blocks: ANGLES, CORSPL, LGMTRY, LINCOR, LINING, LININS, NOISO, PNLSUB, PWRSUM, SEARCH, SORTX, TBLU1, and TERP1.
* New routine for this contract.
** Existing routine (Contract NAS 2-6969) modified for this contract.

Figure A-2.—General Overlay Structure

FL[a] = 105137B to 124074B

OVERLAY 3 (Secondary Overlay Program THREE**)				
Purpose:	Routines called[b]:			
o Subroutine COREN** calculates core and turbine noise components.	CFI* EOGEOM* SHATTN* UNIFLW* WSHOUT*	CPOLAR ESHLDG SHELL VECN*	EDGEDI* REFRACT* SHELXH DOTP*	EEGEOM* SDSPLP* SHLDSP* CROSP*
o Subroutine EJECT calculates jet noise component for an ejector/multi-element suppressor.	ESHLDG ZERO	MENOZZ	TBLU2	TERP2
o Subroutine SPECAN calculates jet noise component for an augmentor wing/slot nozzle.	TBLU2	TERP2		

FL[a] = 105137B to 115707B

OVERLAY 4 (Secondary Overlay Program FOUR)				
Purpose:	Routines called[b]:			
o Subroutine COPTR calculates helicopter or tilt rotor noise component.	BESJ	ERROR	JBES	
o Subroutine LIFTFN calculates lift fan noise component.	BUZSAW RESCAL	ESHLDG UNIT	FANNOS ZERO	FANPED
o Subroutine PROP calculates propeller noise component.	ERROR			

FL[a] = 105137B to 135123B

OVERLAY 5 (Secondary Overlay Program FIVE)			
Purpose:	Routines called[b]:		
o Subroutine MEASRD interpolates on tabular input of measured noise data.	TBLU3	TERP3	TERP2

FL[a] = 105137B to 113643B

OVERLAY 6 (Secondary Overlay Program SIX*)				
Purpose:	Routines called[b]:			
o Subroutine BLWFLP calculates externally blown flap noise component.	ESHLDG TERP2	TBLU3	TBLU2	TERP3
o Subroutine JEINT* calculates jet/edge interaction noise for engine-over-wing configurations.	ZERO			

Figure A-2.—(Concluded)

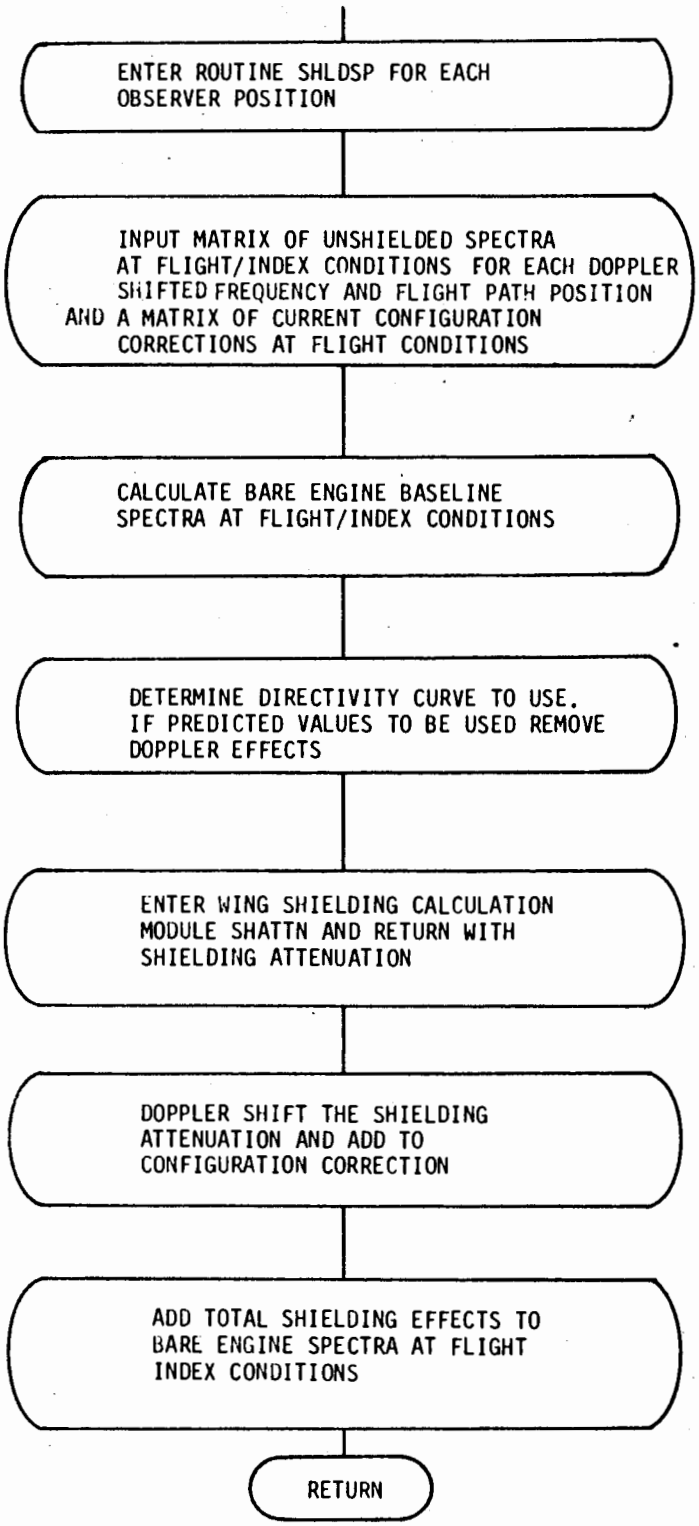

Figure A-3.—Routine SHLDSP to Interface NAS2-6969 With Wing Shielding Calculation Module (SHATTN)*

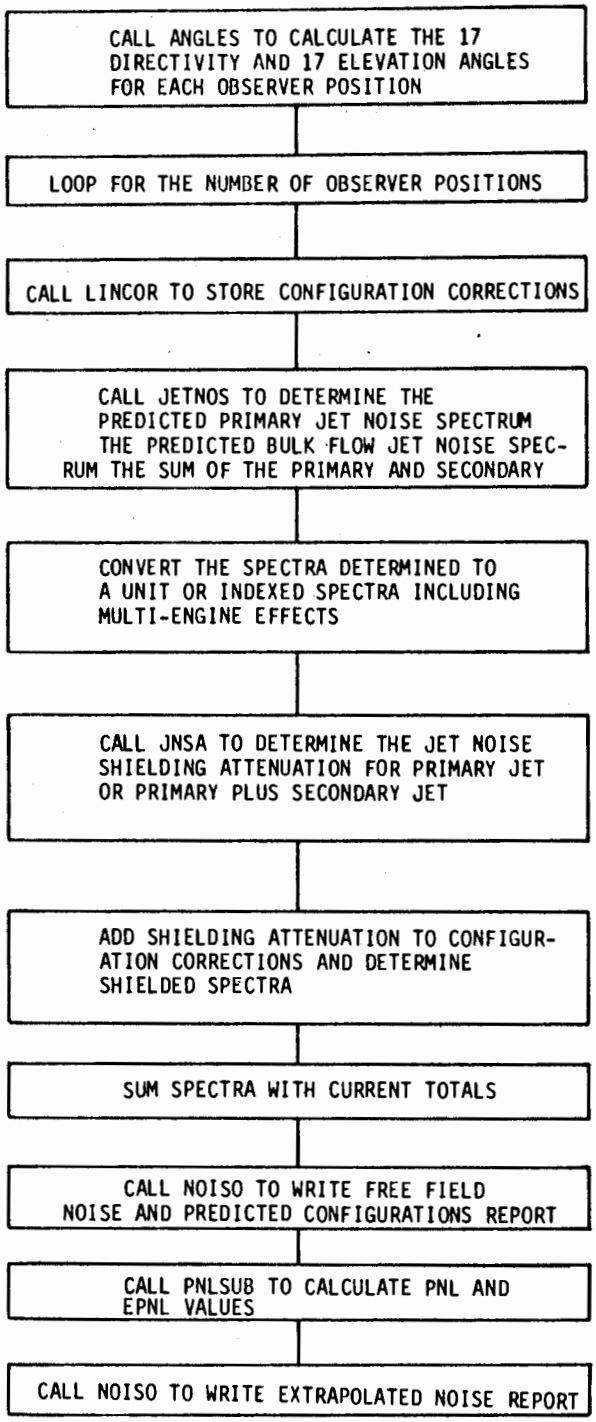

Figure A-4.—Jet Noise Component Logic Flow of Jet

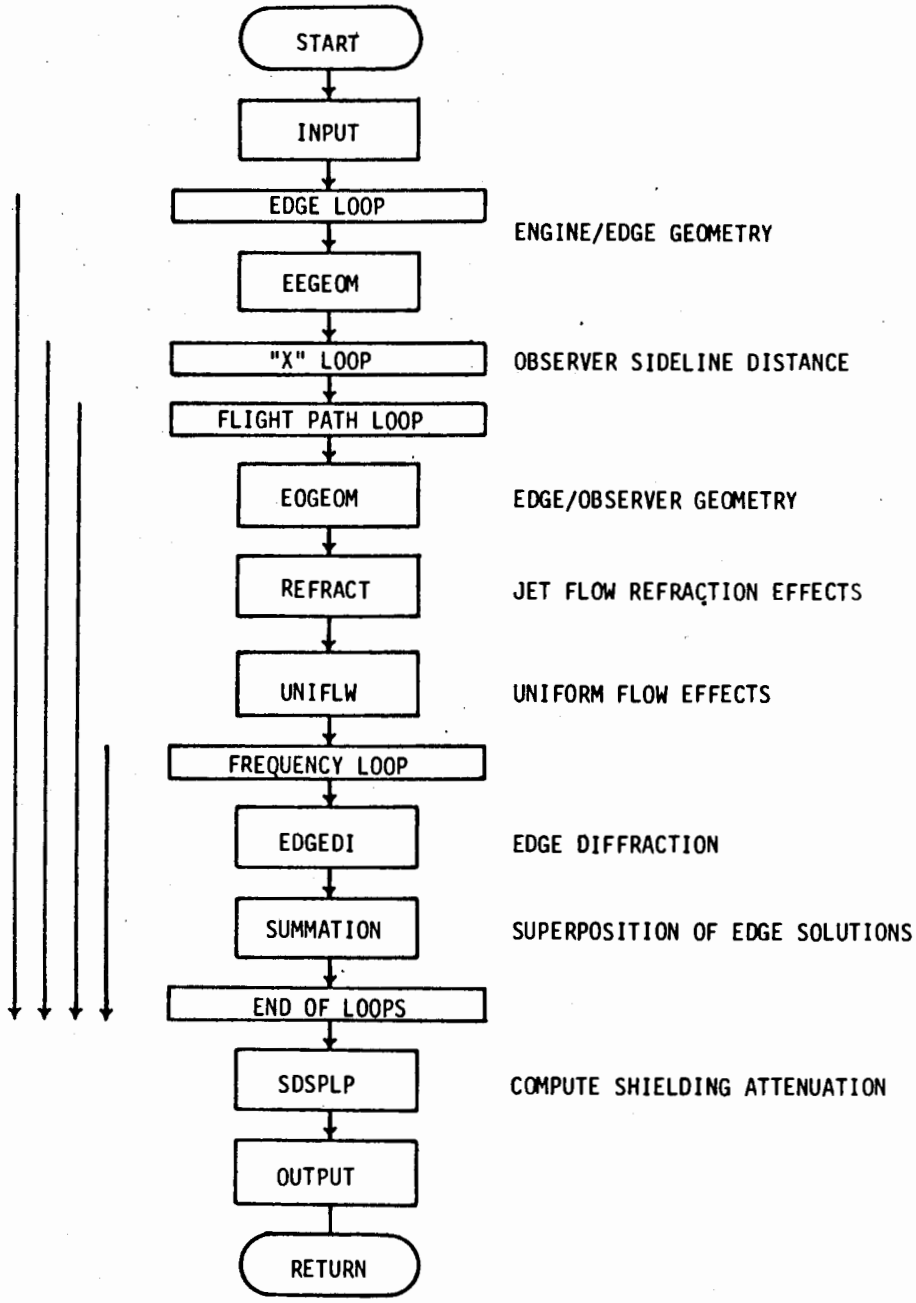

*Figure A-5.—Calculation Sequence in Wing Shielding Module SHATTN**

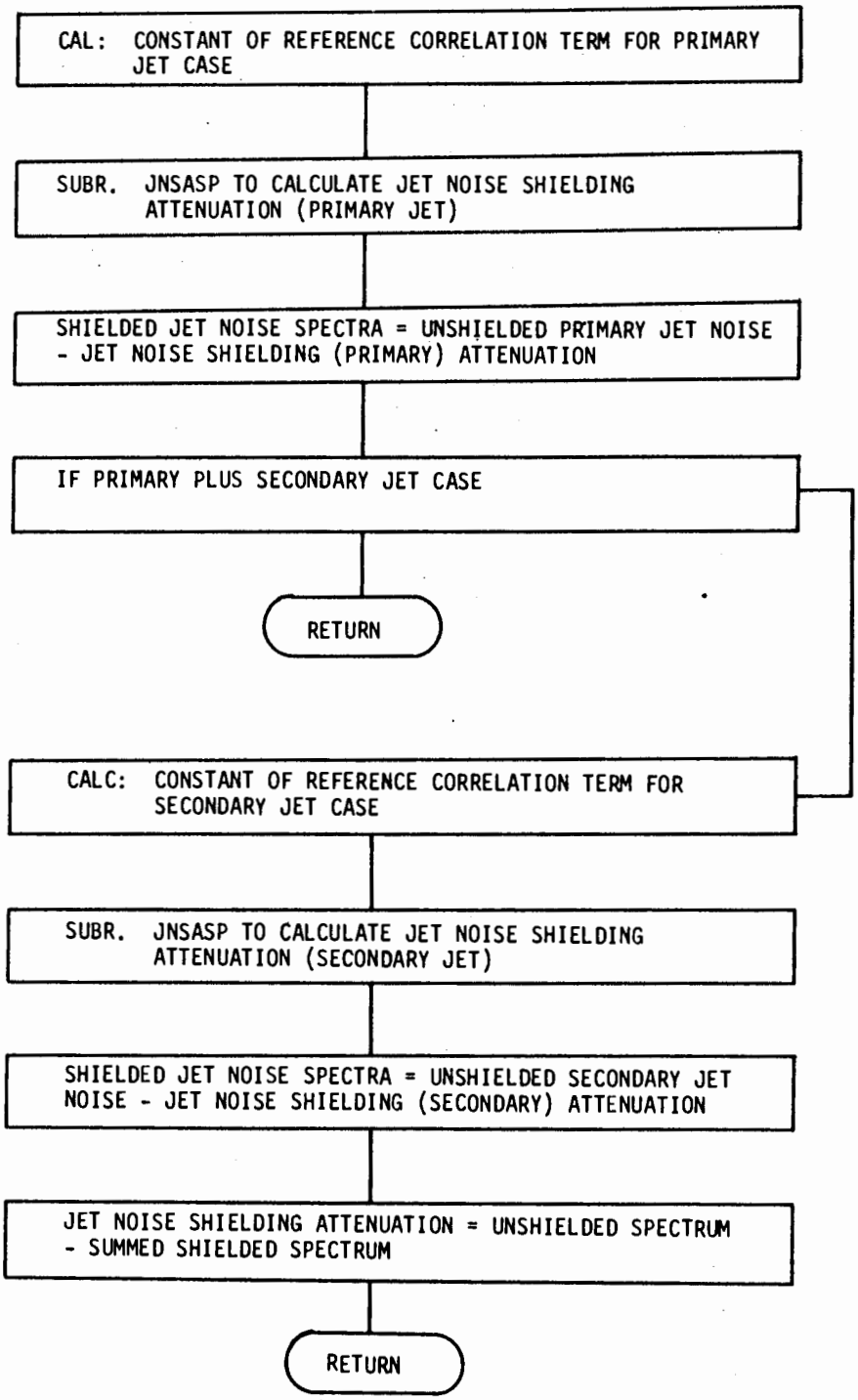

*Figure A-6.—Calculation Sequence Jet Noise Shielding (JNSA)**

3.2.1 EXIT FAN, CORE, AND TURBINE NOISE COMPONENT

Figure A-7 shows the general logic flow of the calculations for the noise components; exit fan (AFT), turbine and core (COREN). When the effect of shielding is to be included, noise components core and turbine must be run separately due to the unique noise component wing shielding data for each component.

3.2.2 INLET FAN OR COMPRESSOR NOISE COMPONENT

Figure A-7 shows the general logic of the calculations for the noise component inlet fan or compressor (INLET). The programming steps are similar to the discharge turbomachinery noise components, except when shielding is included there are no jet flow refraction effects, thus reducing the input requirements for wing shielding data for the inlet fan noise component.

3.2.3 JET NOISE COMPONENT

The procedure to predict the jet noise shielding attenuations for an EOW configuration is unique to the noise components primary and primary plus secondary jet, and is therefore, treated separately from noise components inlet fan, aft fan, core,and turbine. The attenuations are to be subtracted from the predicted unshielded jet noise spectra assumed to be at index conditions. Figure A-4, given previously, shows the logic for subroutine JET with the additional subroutine (JNSA) necessary for jet noise shielding.

3.2.4 JET/EDGE INTERACTION NOISE COMPONENT*

The jet/edge interaction noise component is a new noise source that must be considered in evaluating an EOW aircraft configuration. This noise is caused by the interaction of the jet exhaust with the wing's trailing edge. A computer module has been added to the NAS2-6969 contract software for estimation of this type (ITYPE = 13) of noise. Figure A-8 shows the computation steps for calculations done by this new noise source estimation module.

The jet/edge interaction noise source module is linked to the main program in a manner similar to that used for the other noise source estimation modules available from the NAS2-6969 contract. Therefore, the input scheme for this noise component uses the same NAMELIST name; i.e., $NOISIN, as used for the data sets of the other noise components.

FAA WJH Technical Center
00093051

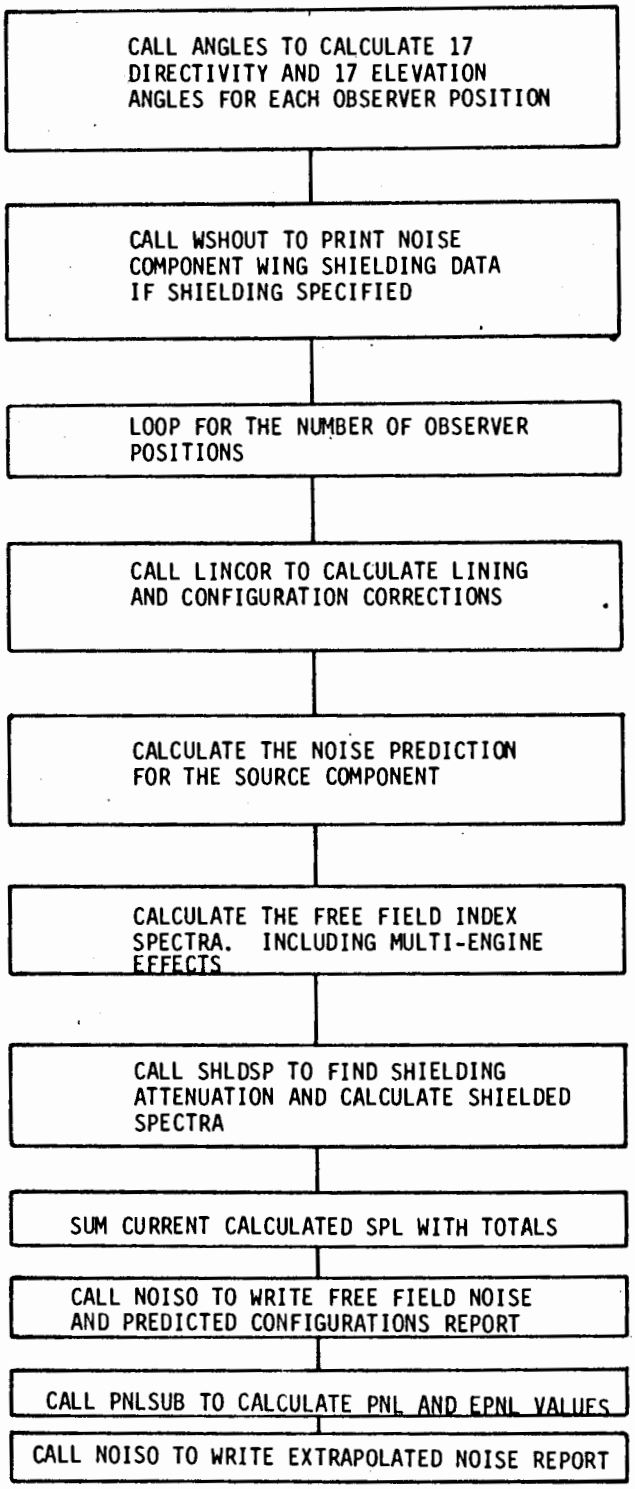

Figure A-7.—General Logic Flow of Noise Components—Aft Fan, Core, and Turbine, and Inlet Fan

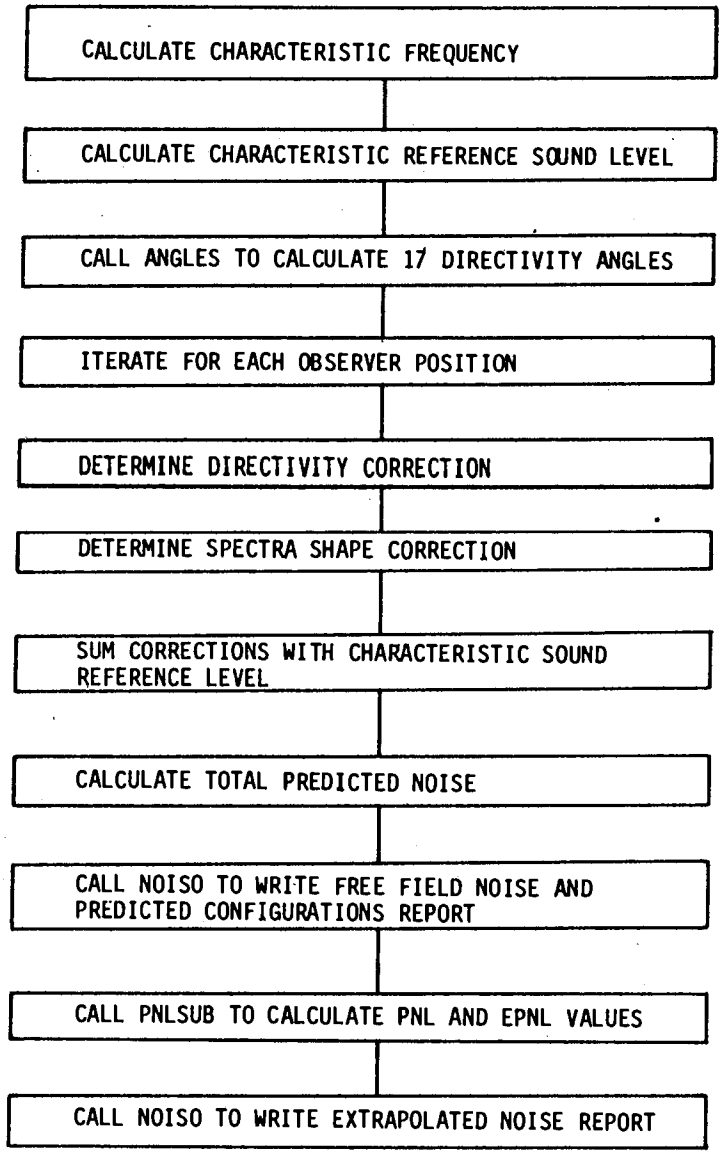

*Figure A-8.—Jet Edge Interaction Noise Component Logic Flow**

4.0 INPUT DATA

In order to facilitate the use of this program, many of the data inputs have prestored default values in the program and are defined in the appropriate parameter description section. An examination of the following sections will indicate the necessary input data needed for the various options built into the program; e.g., establishing different atmospheric conditions; using calculated ground reflection corrections or a 3-dB default value; using measured data to define a noise configuration instead of that obtained by a prediction method; specifying whether shielding is to be included for a particular configuration. The data input procedure is fully described in the sections following and includes in addition to data for shielding all the input as documented in NASA CR-114650. Table A-1 presents a cross reference of the engineering and programming documents by noise type and section number.

The program processes one or more cases of data in a single run. A case consists of from one to three different types of propulsion systems or configurations. The data for each configuration are described in terms of a subset of noise components. The order of input for each case is fixed after the first case. Inputs which remain constant throughout the run, need not be redefined for succeeding cases.

The first input per case consists of an 80 column alphanumeric title record which will be output as part of the heading describing the case. If the same heading is desired throughout the run, only blank records need be entered in succeeding cases. The title record is followed by data cards describing the general conditions which apply throughout the case. These cards are coded in a FORTRAN NAMELIST format. The NAMELIST format requires that the first records start in column 2 with an initiator name $GDATA on General Data Parameters. The order of the parameters is independent but must have the variable name, followed by an equals mark, followed by the assigned value. The parameters must be separated by commas; blanks are ignored. Any succeeding cards must start in or after column 2 and may go though to column 80. A terminator $ must follow the last parameter in each data set.

A variable name can be followed by a single value, or a series of values in the case of variables which require an array of data. The general input format is as follows:

Variables Having Single Values

Example:	integer type	decimal type
	NENG = 3	SLOPE = .25

Variables Which Have Multiple Values

Example: Filling the complete array for a 10 element array

SLDIST(1) or SLDIST = 100., 200., 150., 175., 500., 750., 1000., 1200., 1500., 2000.,

Filling part of the array

SLDIST(3) = 300., 400.,

Table A-1.—Engineering/Programming Document Cross Reference

TYPE OF NOISE (COMPONENT)		ENGINEERING DOCUMENTATION		PROGRAMING DOCUMENTATION	
ITYPE	MODULE	NOISE GEN. AND LINING ATTEN. (NASA CR114649)	SHIELDING (MAIN BODY OF THIS DOCUMENT)	NOISE GEN., LINING ATTEN. & SHIELDING (THIS APPEN.)	EQUIV. NASA CR 114650 SECTION FOR NOISE GEN. & LINING ATTEN.
1	Primary Jet①	5.2.2.1	3.0, 4.0	4.3.2	3.2.2
2	Primary & Sec Jet①	5.2.2.2	3.0, 4.0	4.3.2	3.2.2
3	Core & Turbine①②	5.2.3.2	2.0, 4.0	4.3.3	3.2.3
4	Compressor & Fan Inlet①②	5.2.4.2	2.0, 4.0	4.3.4	3.2.4
5	Exit Fan①②	5.2.4.3	2.0, 4.0	4.3.4	3.2.4
6	Augmenter Wing②	5.2.2.4	-	4.3.5	3.2.5
7	Blown Flap	5.2.2.5	-	4.3.6	3.2.6
8	Lift Fan②	5.2.4.4	-	4.3.7	3.2.7
9	Ejector-Suppressor②	5.2.2.3	-	4.3.8	3.2.8
10	Propeller	5.2.5.2	-	4.3.9	3.2.9
11	Helicopter Prop & Tilt Rotor	5.2.5	-	4.3.10	3.2.10
12	Measured Data	5.2.1	-	4.3.11	3.2.11
13	Jet Edge Interaction③	-	3.0, 4.0	4.3.12	-
GDATA(General Computer Program Data)		5.1.2	-	4.1	3.1
LINING Options		5.1.4	-	4.3.1	3.2.1
CONFIG. CORR. Options		5.1.5	-	4.3.1	3.2.1
EWDATA(Engine/Wing Geometry Data)		-	-	4.2	-
SHLDAT(Noise Component Shielding Data)		-	-	4.4	-

Where ① = shielding option available
② = lining attenuation option available (Sec. 5.1.4 of NASA CR114649)
③ Not a part of NASA program

Notes:
1. NTYPE appears in first $NØISIN record and specifies the number of $NØISIN records in the case.
2. Each $NØISIN record specifies an ITYPE module and all arguments in the record are for that module (lining and configuration options are included in the record as required).

Example of NAMELIST GDATA:
$GDATA ALTOG=100., ALTPG=200., SLOPE=.1, AMACH=.15, NOBS=2,
SLDIST(1)=100., 500., ISPTRM=1, NTENG=2, INSEOW(1)=1, 1, 1 $

Sample cases with input data are presented in this appendix A, sections 5.1 and 5.2.

If shielding is specified in $GDATA, then engine/wing geometry data $EWDATA must be input as the next data set for the particular configuration. As the geometrical relationship for the wing and each propulsion system may vary, the $EWDATA data set is input for each configuration.

Following the $GDATA data set or when shielding is specified the $EWDATA data set is an 80 column alphanumeric title record describing the first noise source configuration. Separate data sets using the NAMELIST initiator $NOISIN describe each noise component in a configuration. If more than one configuration is to be included, the preceeding type of input is included for each additional configuration starting with the title record and ending with the $NAMELIST terminator for the last noise component in the $NOISIN data set. As mentioned previously, there is a maximum of three different types of powerplants per run; therefore a case may be processed having different engine configurations using any or all of the 13 different noise modules depending on the nature of the particular configuration. Reference to the engineering analysis is itemized in the engineering/programming cross reference shown in table A-1. Each noise component data set is described in the following sections. A special input variable terminator is not required to end the run since an end-of-record check is repeatedly made on the input data file at the end of each case.

If shielding is considered and the noise component is effected by shielding, then the $NOISIN data set is followed by $SHLDAT data set describing the shielding data.

When using the program for multiple noise source configurations, an input value for NTENG = 2, or 3 is required in the $GDATA set. When more than one type of noise component is used in a configuration, an input NTYPE = m (where m is the total noise components for the configuration) is needed in the first $NOISIN data set for that configuration. The section covering the sample case section should assist in clarifying the input data.

The program allows the user to specify one of two unit systems for input/output variables. The unit systems considered are the System International (S.I.) and English system. The user must be consistent with the choice made for the unit system because once he has specified his choice, the program considers all inputs to be in that system. The input variable IUNIT specifies the unit system desired, the default option corresponds to the S.I. units.

4.1 GENERAL DATA PARAMETERS ($GDATA INPUT DATA SET)

This section describes those inputs which *must* be defined by the user for the first case of a computer run. Succeeding cases need only the appropriate values changed reflecting a change in the prediction conditions. Unless otherwise stated each variable is to be

defined by input or by the default value(s). In order to facilitate finding the description of a parameter, the list(s) of inputs within each of the following sections have been alphabetized with respect to the names of the variables.

Variable Name	Units	Default	Description
AALT	M(ft)	0.	Airport altitude.
ALTPG	m(ft)	0.	Aircraft height above ground at Y = 0 (fig. 6 of NASA CR-114649).
ALTOG	m(ft)	0.	Observer height above the ground.
AMACH			Aircraft Mach number.
BCG	PNdB	10.	Number of perceived noise decibels down from maximum, used to determine the integration interval for the EPNL calculations.
CPRES	Atm(psia)		Pressure of homogeneous atmosphere defined by user. (Note: Used only if IATMOS = 4.)
CRHUMD	%RH		Relative humidity of homogeneous atmosphere defined by user. (Note: Used only if IATMOS = 4.)
CTEMP	K(°R)		Temperature of homogeneous atmosphere defined by user. (Note: Used only if IATMOS = 4.)
DHUMID	%RH	0.	Constant percent relative humidity delta that is added to ISA. (Note: Used only if IATMOS = 1.)
DPRES	Atm(psia)	0.	Constant pressure delta that is added to ISA. (Note: Used only if IATMOS = 1.)
DTEMP	K(°R)	0.	Constant temperature delta that is added to ISA. (Note: used only if IATMOS = 1.)
EPP		0.	Engine performance parameter used to correlate data output for the Noise Contour Program or to specify operating condition when using the "measured data" module.
FLD(1)	Hz		Data frequencies for the ground impedance data curve used in the ground reflection calculation. The number of values to be specified is ND. (Note: Used only if IGDR = 0.)
. . .	. . .		
FLD(25)	Hz		

Variable Name	Units	Default	Description
FLR	PNdB	.90.	Noise floor for EPNL calculations. Values less than FLR are not included when computing the duration for EPNL.
IAIR		0	Specifies whether the air absorption coefficients are calculated by the program or defined by the user. Set equal to: 0 if program calculates 1 if user defines (see UAIRAB) −1 if program retains coefficients from previous case
IATMOS		0	Specifies the type of atmospheric conditions used by program. Set equal to: 0 for nonhomogeneous international standard atmosphere (ISA) 1 for nonhomogeneous ISA plus user defined constants for relative humidity, pressure, and temperature added to ISA. (Note: See DHUMID, DPRES, DTEMP.) 2 for nonhomogeneous atmospheric conditions that are defined by the user. (Note: See NTEMP, TALT, TEMP, NPRES, PALT, PRES, NHUMID, RALT, RHUMID.) 3 homogeneous atmosphere of 1 ATM = 14.696 psia; 288.16 K (15° C) = 518.688° R (59° F); 70% RH 4 homogeneous atmosphere defined by user. (Note See CPRES, CRHUMD, CTEMP.)
IDOP		0	Doppler shift switch. 0 for no Doppler shift factor 1 Doppler shift factor included (Note: For fan noise the correction is for frequency only.) 2 Doppler shift factor included (Note: For fan noise a correction is made for both the frequency and the noise levels.)

Variable Name	Units	Default	Description
IEGA		0	Specifies whether corrections for extra ground attenuation are to be applied while extrapolating the noise level from the airplane to the observer. Set equal to: 0 if EGA desired 1 if EGA is not wanted
IGDR		1	Specifies whether corrections for ground reflection based on +3-dB delta, or calculated corrections (app. A, NASA CR114649) are to be applied while extrapolating the noise level from the airplane to the observer. Set equal to: 0 if calculated corrections are made (Note: See XKN, ND, FLD, ZNR, ZNI.) 1 if a delta of +3 dB is to be used
*INSEOW(1) . . . INSEOW(3)		0 0	An array specifying whether shielding is to be included for a particular engine configuration in which case engine wing geometry data ($EWDATA data set) is to be input for that configuration. 0 engine wing geometry data are not to be input (unshielded) 1 engine wing geometry data must be input (shielded)
IOUT(1) . . . IOUT(7)		0 . . . 0	An array to indicate the output reports desired. The selection can include seven different output reports or a default report which gives a heading, PNL, TCPNL, time array, EPNL, and a one page summary of assumptions under which the run was made. Order of input is immaterial e.g., IOUT(1) = 5, 4, 3, 2, 1 functions the same as IOUT(1) = 1, 2, 3, 4, 5 = 1 Type 1 report; total SPL at the observer for each of the 17 angles (10°, 20°, 30°, . . . 170°) for each of the frequency bands and observer positions. = 2 Type 2 report; summary of options/assumptions under which the case was made.
(Note: App. A, sec. 5.0 output data illustrates the various output reports described by this input.)			

Variable Name	Units	Default	Description
			= 3 Type 3 report; SPL, for each component, at the observer in the same manner as type 1. = 4 Type 4 report; flightpath/observer geometry and engine/wing geometry if applicable. = 5 Type 5 report; extrapolation corrections. = 6 Type 6 report; total free-field index (radius of 1 m) SPL's for all angles, frequencies and observer positions. = 7 Type 7 report; free-field index spectra for each component. If shielding is specified, the type 7 report selection produces output of wing shielding component data.
*ISFE		0	Specifies if flight effects per uniform flow theory are to be included in wing shielding calculations. ISFE = 0 for inclusion of flight effects ISFE ≠ 0 for prediction based on static test results
ISPTRM		0	Specifies the type of frequency bands to be used in the calculations. Set equal to: 0 for 24 preferred 1/3 octave bands 1 for 8 preferred 1/1 octave bands
IUNIT		0	Specifies whether input parameters and output reports are in S.I. or English units. 0 = S.I. 1 = English units
ND		3	Number of data points for the ground normalized complex impedance curve. (3 ≤ ND ≤ 25) (Note: Use only if IGDR = 0, see XKN, FLD, ZNR, ZNI.)
NHUMID			Specifies the number of entries in each of the percent relative humidity (RHUMID versus RALT) tables that are defined by the user for nonhomogeneous atmospheric conditions. (2 ≤ NHUMID ≤ 50) (Note: Use only if IATMOS = 2.)

Variable Name	Units	Default	Description
NLOPT		0	Specifies table output for noise contour estimation on file TAPE20. 0 = no output 1 = EPNL versus EPP, elevation angle, $\log_{10}$ of the range at CPA 2 = same except peak PNL (Note: Output reporting must be set to TYPE 1 or default–see IOUT. If NLOPT = 0, each case will have a noise level, an engine performance parameter, an elevation angle, and the $\log_{10}$ of the off-axis range written to file TAPE20.)
NOBS		1	Number of observers defined in SLDIST table. ($1 \leq$ NOBS ≤ 10.)
NPRES			Specifies the number of entries in each of the pressure (PRES) versus altitude (PALT) tables that the user defines for nonhomogeneous atmospheric conditions. ($2 \leq$ NPRES ≤ 50) (Note: Used if IATMOS = 2.)
NTENG		1	Specifies the number of distinct types of engine configurations to be considered (NTENG ≤ 3). Noise component parameters must be defined for each different source.
NTEMP			Specifies the number of entries in each of the temperature (TEMP) versus altitude (TALT) tables that have been defined by the user for nonhomogeneous atmospheric conditions. ($2 \leq$ NTEMP ≤ 50) (Note: Used only if IATMOS = 2.)
PALT(1) . . . PALT(50)	m(ft) . . . m(ft)		Each entry in this table defines the altitude for the pressure defined by the corresponding entry in the PRES table. (Note: Used only if IATMOS = 2, see NPRES.)
PRES(1) . . . PRES(50)	Atm(psia) . . . Atm(psia)		Each entry in this table defines the pressure for the altitude defined by the corresponding entry in the PALT table. (Note: Used only if IATMOS = 2, see NPRES.)

Variable Name	Units	Default	Description
RALT(1) ... RALT(50)	m(ft) ... m(ft)		Each entry in this table defines the altitude for the relative humidity defined by the corresponding entry in the RHUMID table. (Note: Used only if IATMOS = 2, see NHUMID.)
RHUMID(1) ... RHUMID(50)	%RH ... %RH		Each entry in the table defines the percent relative humidity for the altitude defined by the corresponding entry in the RALT table. (Note: Used only if IATMOS = 2, see NHUMID.)
SLDIST(1) ...	m(ft) ...		Sideline position of 1st observer (see NOBS).
SLDIST(N)	m(ft)		Sideline position of Nth observer.
SLOPE		0	Aircraft climb gradient. (Tangent of climb angle.)
TALT(1) ... TALT(50)	m(ft) ... m(ft)		Each entry in this table defines the altitude for the temperature defined by the corresponding entry in the TEMP table. (Note: Used only if IATMOS = 2, see NTEMP.)
TEMP(1) ... TEMP(50)	K(°R) ... K(°R)		Each entry in this table defines the temperature for the altitude defined by the corresponding entry in the TALT table. (Note: Used only if IATMOS = 2, see NTEMP.)
TCG	sec	10.	Normalizing time constant in seconds used in the EPNL calculations (Note: See BCG, FLR.)
UAIRAB(1) ... UAIRAB(N)	dB/km(dB/1000 ft) ... dB/km(dB/1000 ft)		User defined air absorption coefficient for the frequency bands. (Note: Used only if IAIR = 1), N = 8 for 1/1 0.B.; N = 24 for 1/3 0.B.
XKN			Wave number ratio, XKN = K/K_0 or C_0/C; where C_0= speed of sound in air; C = speed of sound in ground. (Note: Used only if IGDR = 0, see FLD, ND, ZNI, ZRN.) RESTRICTION: XKN > 0.
ZNR(1) ... ZNR(25)	(See app. A, NASA CR114649.)		Real part of (Z_1/Z_0) for normalized ground impedance data curve. (Note: ZNR > 0, see FLD, ND, XKN, ZNI; used only if IGDR = 0.)

Variable Name	Units	Default	Description
ZNI(1) ... ZNI(25)			Imaginary part of $-Z_1/Z_0$ for normalized ground impedance data curve. (Note: See FLD, ND, XKN, ZNR; used only if IGDR = 0.) (Note: The reactance of the ground is usually capacitive, hence negative. The option here permits the user to specify positive values which are treated as capacitive reactances.)

4.2 ENGINE/WING GEOMETRY* ($EWDATA DATA SET)

This section describes the engine wing geometry data to be input for each shielded distinct type of engine configuration (see NTENG). Successive configurations need only reflect the change in the data set. See figure A-9 for an illustration of the engine wing geometry.

Variable Name	Units	Default	Description
DDLD			Nondimensional engine length, L/D.
DDSD			Nondimensional distance between engine centerline and wingtip, S/D.
DDX0D		0	Nondimensional distance in axial direction from nozzle exit plane to point on top of wing, X_0/D.
DDX1D			Nondimensional distance in axial direction to trailing edge from point on top of wing, X_1/D.
DDX2D			Nondimensional distance in axial direction to leading edge from point on top of wing, X_2/D.
DDY0D		1	Nondimensional distance normal to engine centerline from top of wing, Y_0/D.
DDY1D			Nondimensional distance normal to engine centerline from the trailing edge to top of wing, Y_1/D.
DDY2D			Nondimensional distance normal to engine centerline from the leading edge to top of wing, Y_2/D.

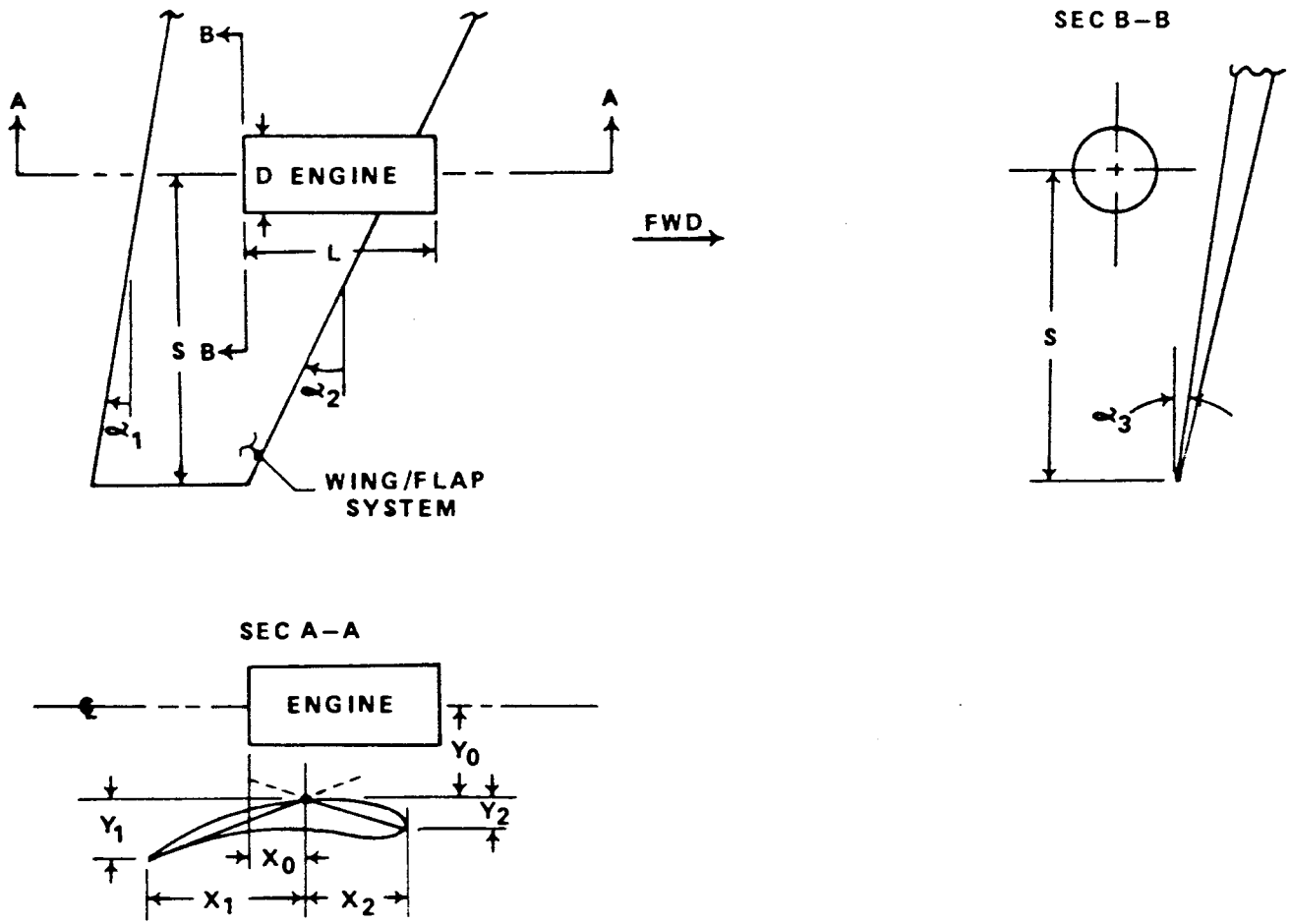

Figure A-9.—Engine/Wing Geometry

Variable Name	Units	Default	Description
DIANE	m(ft)	0.3048	Nozzle diameter, D.
DIHED	deg	0.	Wing dihedral, α_3.
IES		0	Indicator for number of wings to be considered in shielding calculations. IES = 0 for both wings on near and far side of airplane IES = 0 for just the wing on the near side of airplane
SWPLE	deg	0.	Leading-edge sweep angle, α_2.
SWPTE	deg	0.	Trailing-edge sweep angle, α_1.

4.3 NOISE COMPONENT PARAMETERS ($NOISIN INPUT DATA SETS)

As mentioned previously the program estimates noise for aircraft equipped with one of three different types of propulsion systems. Each configuration is treated as a set of noise components, each of which will have a separate $NOISIN data set. Each configuration is treated independently and may consider any subset of the following 13 noise component modules:

1. Primary jet
2. Primary and secondary jet
3. Core and turbine, #
4. Compressor and fan inlet, #
5. Fan exit, #
6. Augmenter wing, #
7. Blown flap
8. Lift fan,
9. Ejector suppressor, #
10. Propeller
11. Helicopter, propeller, and tilt rotor
12. Measured data
13. Jet edge interaction*

(Note: denotes lining attenuation option.)

The order of these components has meaning only in respect to the internal order in the computer program and a means of identifying the data inputs per noise component (e.g., if augmenter wing noise is to be predicted, the input, ITYPE = 6, in the $NOISIN data set indicates to the program that this data set applies to augmenter-wing noise; also TT6, GAMA6, DELT6, etc., are inputs unique to the data set when ITYPE = 6). [For the component jet edge interaction ITYPE = 13, all data are input through an array variable name EDGVAR.]* Once the order of calling the noise source estimation modules is selected for the first case, it *must* be maintained for all subsequent cases.

The identifying number also allows the lining attenuation and configuration correction inputs to be described in a separate section which is referred to by the various noise component sections rather than repeated descriptions in each section. This is done in the following manner for any noise component. If lining or configuration corrections are desired, the input data set variable names are appended by an identifying number on the end of the variable name (e.g., LIN3 = 1 (core and tubine lining attenuation); LIN6 = 1 (augmenter wing lining attenuation); ICOR1 = 1 (primary jet configuration corrections); ICOR11 = 1 (helicopter configuration corrections) etc.). There is no lining correction option for component jet edge interaction, but configuration corrections, if desired, (ICOR13 = 1) may be included.

Three data inputs for each distinct source noise configuration have a special place in each configuration data set (i.e., they must be defined in the first $NOISIN data set in each configuration). These inputs are:

NTYPE — Specifies the total number of noise components (NOISIN data sets) in a configuration. It informs the program to accept data for NTYPE noise components.

NENG — Specifies the number of identical powerplants on the aircraft.

INSHLD — Specifies wing shielding for the configuration. The computer program expects $SHLDAT data sets.

4.3.1 LINING ATTENUATION AND CONFIGURATION CORRECTIONS

This section describes the data inputs for noise components (including the separate component for measured data) when configuration corrections are desired in the estimation process for a particular noise component. For lining attenuation corrections this section applies only to the core and turbine, compressor and inlet fan, exit fan, augmenter wing, lift fan, and ejector-suppressor noise modules. The input variable names described below differ between noise components only by the appended number described in the introduction of the Noise Component Parameters; i.e., ICORm, where m = 1, 2, 3, 4 . . . 12, 13, for the particular noise component ($NOISIN data set).

Variable Name	Units	Default	Description
ICORm		0	= 0 indicates no configuration corrections. = 1 indicates ΔdB corrections are a function of directivity angle only. =2 indicates ΔdB corrections are a function of frequency (1/3 or 1/1 octave) and directivity angle. (Note: Changing ICORm from 1 to 2 or vice versa is not permitted for the same noise component of an engine configuration. Each engine configuration can be treated independently of the other by use of NTENG option if this comparison is desired.)
LINm		0	= 0 indicates no lining attenuation in corrections. = 1 indicates lining attenuation corrections are calculated by program.
Lining Attenuation Parameters:			**LINm ≠ 0**
CFm	m/s(fps)		Speed of sound in the flow.
EDHm	m(ft)		Effective duct height for lining. (Note: Used only if LGMm = 0.)
ELOHm			Ratio of effective lining treatment length to duct height. (Note: Used only if LGMm = 0.)
FMm			Mach number of the flow. (Note: FMm is negative for inlet lining.)
IDPm		2	Lining design point option. = 1 for single design point = 2 for multiple design point
ILAYm		1	= 1 for single layer lining = 2 for double layer lining
IMAm		0	Specifies whether program calculates or user defines the peak attenuation for each target frequency. = 0 program calculates = 1 user defines PLAm values
LGMm		0	Specifies whether program calculates peak attenuation using lining geometry or user-defined effective duct height

Variable Name	Units	Default	Description
			and ratio of treatment length to effect duct height. = 0 user inputs EDHm and ELOHm = 1 user inputs lining geometry (See: RIWm and TLm.) (Note: use only if IMAm = 0.)
NTFm		0	Number of target frequencies in lining (maximum is 10). If NTFm is set equal to zero, the computer program will set the target frequency, TFm, to the current calculated characteristic frequency for a particular noise component. The characteristics frequency is that frequency where the spectrum level is at a maximum. After the default target frequency is set, NTFm is set to 1.
NWLm		0	Number of walls in lining. (Maximum is 10.)
PCTAm(1) . . .	% . . .	100% . . .	Percent treated for 1st target frequency.
PCTAm(N)	%	0	Percent treaed for Nth target frequency, N = NTFm.
PLAm(1) . . .	dB . . .		Peak attenuation for 1st target frequency.
PLAm(N)	dB		Peak attenuation for Nth target frequency, N = NTFm. (Note: Used only if IMAm = 1.)
R1Wm(1) . . .	m(ft) . . .		Radius of 1st wall of lining.
R1Wm(N)	m(ft)		Radius of Nth wall of lining. (Note: Used only if LGMm = 1, N = NWLm.)
TLm(1)	m(ft)		Treatment length of 1st wall of lining, N = NWLm.
TLm(N)	m(ft)		Treatment length of Nth wall.
TFm(1) . . .	Hz . . .	Charac-teristic peak noise frequency	First target frequency. (Note: If NTFm = 0, TFm(1) will be reset to the current calculated characteristic frequency.)

Variable Name	Units	Default	Description
TFm(N)	Hz	0	Nth target frequency, N = NTFm.
Configuration Corrections:			**ICORm** $\neq$ 0
DOB(1) ... DOB(N)	dB ... dB		Table of ΔdB corrections as a function of directivity angles only. (Note: ICORm = 1 and N = NPSCR).
DPB(1) ... DPB(M)	dB ... dB		Table of ΔdB corrections as a function of frequency band number, and the directivity angles. This table is input as a single array whose indices correspond to a two-dimensional array: DPB(M) = X(i, j) where M = i+K (j−1), and (i, j) correspond to the pass band number and directivity angle index, respectively. Note that K = 8 for full octaves or 24 for 1/3 octaves. Applies only if ICORm = 2.
PSCR(1) ...	deg ...		Table of directivity angles corresponding to either DOB array or DPB array depending on ICORm setting.
PSCR(N)	deg		N = NPSCR.
NPSCR			Number of directivity angles on which the configuration correction table is based, (2 $\leq$ NPSCR $\leq$ 17).

4.3.2 PRIMARY JET NOISE AND PRIMARY PLUS SECONDARY JET NOISE

This section describes the subset of the $NOISIN parameters used in estimating either primary jet noise or combined primary and secondary jet noise. These inputs are needed in addition to the appropriate $GDATA parameters described previously. (Note: For ΔdB corrections, see sec. 4.2.1 on lining attenuation and configuration corrections.) Applicable shielding data for this subset are described in section 4.4.

Variable Name	Units	Default	Description
*INSHLD		0	Indicator for denoting wing shielding calculations are desired and inputs are required immediately after this $NOISIN data set. INSHLD = 0 for no input or shielding calculation INSHLD ≠ 0 for input according to $SHLDAT data set format and shielding calculations are desired RESTRICTION: If default values are desired in shielding calcualtions, INSHLD = 1 must be input on the first $NOISIN data set in the first case of a job.
ITYPE			Indicator for primary or combined primary and secondary jet noise. ITYPE = 1 for primary jet ITYPE = 2 for primary and secondary jet This variable must be specified in the first case for each noise component for each different noise source configuration.
NTYPE		1	Number of noise components in a configuration. (Note: NTYPE must be specified only in the first $NOISIN data set of each configuration in the first case of a run if different than 1.)
Primary Jet Parameters:			
AP1	$m^2(ft^2)$		Cross-sectional area of the nozzle exit.
ANGJT1	deg	0	Engine inclination angle.
DIAMT1	m(ft)	0	Diameter of nozzle. If zero or negative, the diameter will be calculated based on nozzle area (AP1).
NJET1			Code for type of input data. NJET1 = 1 user defines AP1, PR1, TT1 NJET1 = 2 user defines WP1, PR1, TT1

Variable Name	Units	Default	Description
			NJET1 = 3 user defines AP1, WP1, VP1 plus AS2, VS2, WS2 if secondary jet noise is to be considered.
MCODE1		1	Code for Strouhal curve. MCODE1 = 1 for flight spectrum curve MCODE1 = 2 for ground spectrum curve.
PR1			Nozzle pressure ratio; i.e., total pressure divided by freestream static pressure.
TT1	K(°R)		Jet total temperature.
VP1	m/s(fps)		Velocity of jet exhaust relative to nozzle.
WP1	kg/s(lbm/s)		Primary mass flow.

Secondary Jet Parameters:

The following three parameters are needed in addition to the above combined primary and secondary jet noise, (ITYPE = 2).

Variable Name	Units	Default	Description
AS2	$m^2(ft^2)$		Secondary jet nozzle area.
VS2	m/s(fps)		Secondary jet velocity relative to nozzle.
WS2	kg/s(lbm/s)		Secondary mass flow.

4.3.3 CORE AND TURBINE NOISE

This section describes the subset of the $NOISIN parameters used to estimate core and turbine noise. These inputs are specified in addition to the $GDATA data set described previously. (Note: For ΔdB corrections, see sec. 4.3.1 on lining attenuation and configuration corrections.)

Variable Name	Units	Default	Description
DELT3	deg	0	Engine attitude angle.
INSHLD		0	Wing shielding indicator. Description same as ITYPE = 1, 2, 3, or 4.
ISW3		0	Specifies noise type to be predicted. ISW3 = 0 for core and turbine noise

Variable Name	Units	Default	Description
			ISW3 = 2 for core noise only ISW3 = 3 for turbine noise only RESTRICTION: When wing shielding is desired (INSHLD ≠ 0), the value of ISW3 will impact the empirical terms chosen for shielding calculations. ISW3 = 2 causes program to use core noise empericisms ISW3 ≠ 2 causes program to use turbine noise empericisms
ITYPE			ITYPE = 3 for core and turbine noise prediction This variable must be specified in the first case for each noise component for each configuration.
NENG		1	Number of engines. If other than 1, this must be specified for the first noise component of each type of propulsion system.
NTYPE		1	Number of noise types in a configuration. (Note: NTYPE must be specified only in the first $NOISIN data set of each configuration for the first case of a run.)
Core Noise Parameters:			
CMF3	kg/s(lbm/s)		Combustor corrected mass flow. Corrected to sea level, static conditions (1 ATM, 15° C).
EK3			Specific engine correction. (See table 10 in NASA CR114649.)
JB3			Indicator for type of burner. JB3 = 1 for annular type burner JB3 = 2 for can type burner
PP3			Turbine total pressure ratio; i.e., turbine inlet total pressure divided by turbine exit total pressure.
TT3	K(°R)		Combustor exit total temperature.

Variable Name	Units	Default	Description
Turbine Parameters:			
BN3			Number of blades for turbine last stage.
CLS3	m/s(fps)		Speed of sound at last turbine stage. If CLS3 is not set it will be estimated internally by program.
CS3			Stator/rotor spacing. (See fig. 55 in NASA-CR114649.)
DT3	m(ft)		Tip diameter for turbine last stage rotor. Required only if VTR3 is unknown.
IC3			Indicator for nozzle configuration type. IC3 = 0 for dual flow nozzles of turbofans or turbojets IC3 ≠ 0 for engines with retracted primary flow nozzle (e.g., JT8D)
PMF3	kg/s(lbm(s)		Primary mass flow.
SS3	RPM		Shaft speed.
TU3	K(°R)		Turbine outlet total temperature. Required only if CLS3 is unknown.
VTR3	m/s(fps)		Relative tip speed of turbine last stage rotor.

4.3.4 COMPRESSOR, FAN INLET, AND FAN EXIT NOISE

This section describes the subset of the $NOISIN parameters used to estimate the compressor, fan inlet, and fan exit noise. These inputs are needed in addition to the appropriate $GDATA parameters. (Note: For ΔdB corrections, see sec. 4.3.1 on lining attenuation and configuration corrections.)

Variable Name	Units	Default	Description
DELT45	deg	0	Engine attitude angle.
FPR45(I)			Fan or compressor pressure ratio, ($1 \leq I \leq$ NSTG45).
INSHLD		0	Wing shielding indictator. Descriptt-ion is same for ITYPE = 1, 2, 3, or 4.

Variable Name	Units	Default	Description
ITYPE			ITYPE = 4 for compressor or fan inlet noise ITYPE = 5 for fan exit noise This variable must be specified in the first case for each noise component for each configuration.
NB45(I)			Number of compressor or fan blades for each stage, ($1 \leq I \leq$ NSTG45).
NENG		1	Number of engines. If other than 1, this must be specified for the first noise component of each type of propulsion system.
NTYPE		1	Number of noise components in the configuration. (Note: NTYPE must be specified only in the first $NOISIN data set of each configuration for the first case of a run.)
NSTG45			Number of fan stages, ($1 \leq$ NSTG45 ≤ 3).
RN145	RPM		Rotor rotational speed.
RSS45(I)	%		Minimum rotor/stator spacing, ($1 \leq I \leq$ NSTG45).
RTS45		0	Relative tip Mach number of the first stage without inlet guide vanes (IGV). If less than or equal to 0, IGV's will be assumed for the first stage. If RTS45 is less than one, but greater than zero, there is no buzzsaw component.
Fan Inlet Parameters:			(In addition to the inputs above for inlet fan noise; i.e., ITYPE = 4.)
CFPR4			Fan pressure ratio when the relative tip Mach number equals 1.025.
DIAM4(I)	m(ft)		Compressor or inlet fan diameter, ($1 \leq I \leq$ NSTG45).
Fan Exit Parameters:			(In addition to the first set of inputs for fan exit noise; i.e., ITYPE = 5.)
AREA5(I)	$m^2(ft^2)$		Fan discharge area, ($1 \leq I \leq$ NSTG45).
BPR5			Engine bypass ratio, m_2/m_1 where m_1 . . . primary mass flow m_2 . . . secondary mass flow

Variable Name	Units	Default	Description
NI5			Indicator for duct type = 0 for short fan ducts = 1 for long fan ducts with retracted primary nozzle; i.e., the JT8D engine = 2 for long fan ducts with approximate coplanar primary/secondary nozzle exits = 3 for approximate 3/4 length fan ducts

4.3.5 AUGMENTOR WING NOISE

This section describes the subset of the $NOISIN parameters used to estimate the augmentor wing noise. These inputs are needed in addition to the appropriate $GDATA parameters described previously. (Note: For ΔdB corrections, see sec. 4.3.1 on lining attenuation and configuration corrections.)

Variable Name	Units	Default	Description
AD6	$m^2(ft^2)$		Nozzle discharge area.
DE6	m(ft)		Effective diameter (hydraulic diameter) DE6 = 4 * AD6 / perimeter = 2 H / (1 + H / L) H is slot height; L is slot length.
DELT6	deg	0	Flap angle relative to the horizon.
GAMA6		1.4	Ratio of specific heats for exhaust flow.
ITYPE			ITYPE = 6 for augmentor wing noise. This variable must be specified in the first case for each noise component for each configuration.
NENG		1	Number of engines. If other than 1, this must be specified for the first noise component of each type of propulsion system.
NTYPE		1	Number of noise components in a configuration. (Note: NTYPE must be specified only in the first $NOISIN data set of each configuration for the first case of a run.)

Variable Name	Units	Default	Description
TT6	K(°R)		Total temperature at the nozzle exit.
XNPR6			Nozzle pressure ratio–the total pressure at the nozzle exit divided by the freestream static pressure.

4.3.6 BLOWN FLAP NOISE

This section describes the subset of the $NOISIN parameters used to estimate the blown flap noise. These inputs are supplied in addition to the $GDATA parameters. (Note: For ΔdB corrections, see sec. 4.3.1 on lining attenuation and configuration corrections.)

Variable Name	Units	Default	Description
AN7	$m^2(ft^2)$		Nozzle discharge area.
DELT7	deg	0	Engine attitude angle.
DL7			Dimensionless distance between nozzle exit and target point on the flap(s) when the nominal flap angle is 45°; i.e., L/D in NASA-CR114649 (sec. 5.2.2.5).
DN7	m(ft)		Nozzle exit diameter or hydraulic diameter.
FANG7	deg	0	Nominal flap angle.
HD7			Dimensionless distance between nozzle centerline and mean wing chord; i.e., H/D in NASA-CR114649 (sec. 5.2.2.5).
ITYPE			ITYPE = 7 for blown flap noise. This variable must be specified in the first case for each noise type for each configuration.
NENG		1	Number of identical noise sources. If other than 1, this must be specified for the first case for each configuration.
NTYPE		1	Number of noise types in a configuration. (Note: NTYPE must be specified only in the first $NOISIN data set of each configuration for the first case of a run.)

Variable Name	Units	Default	Description
PR7			Nozzle pressure ratio; i.e., total pressure divided by freestream static pressure.
TT7	K(°R)		Total temperature of exhaust at nozzle exit.

4.3.7 LIFT FAN NOISE

This section describes the subset of the $NOISIN parameters used to estimate lift fan noise. These inputs are supplied in addition to the appropriate $GDATA parameters described previously. (Note: For ΔdB corrections, see sec. 4.3.1 on lining attenuation and configuration corrections.)

Variable Name	Units	Default	Description
AREA8	$m^2(ft^2)$		Fan discharge area. IF = 0. No aft fan noise is calculated.
CRFPR8			Fan pressure ratio for the relative tip Mach number of 1.025.
DELTA8	deg	0	Engine attitude angle.
DIAM8	m(ft)		Fan inlet diameter. IF = 0. No inlet fan noise calculated.
FPR8			Fan pressure ratio; i.e., total pressure aft of a fan stage divided by total pressure just forward of the fan stage.
ITYPE			ITYPE = 8 for lift fan noise. This variable must be specified in the first case for each noise type for each configuration.
NB8			Number of fan blades.
NENG		1	Number of lift fans being considered. If other than 1, this must be specified for the first case for each configuration.
NTYPE		1	Number of noise types in a configuration. (Note: Must be specified only in the first $NOISIN data set of each configuration for the first case of a run.)
RN18	RPM		Rotor rotational speed.

Variable Name	Units	Default	Description
RSS8	%		Minimum rotor/stator spacing.
RTS8		0	Relative tip Mach number of the fan without inlet guide vanes. If RTS8 is less than or equal to zero inlet guide vanes are assumed. If less than one but greater than zero, there is no buzzsaw noise component.

4.3.8 EJECTOR-SUPPRESSOR NOISE

This section describes the subset of the $NOISIN data set used to estimate ejector-suppressor noise. These inputs are supplied in addition to the $GDATA parameters described previously. (Note: For ΔdB corrections, see sec. 4.3.1 on lining attenuation and configuration.)

Variable Name	Units	Default	Description
AR9			Area ratio of suppressor nozzle; i.e., primary plus secondary flow area divided by primary flow area.
AREA9	$m^2(ft^2)$		Discharge area of suppressor nozzle.
CV9			Velocity coefficient for nozzle.
DELT9	deg	0	Angle between thrust vector and horizon.
EMACH9			Exhaust Mach number for ejector (only needed if IEJ9 $\neq$ 0).
EXNM9			Exhaust Mach number for nozzle.
ITYPE			ITYPE = 9 for ejector-suppressor noise. This variable must be specified in the first case for each noise type for each configuration.
IEJ9		0	Switch for ejector and/or suppressor. IEJ9 = 0 bare suppressor IEJ9 $\neq$ 0 ejector/suppressor
NENG		1	Number of engines. If other than 1, this must be specified for the first case for each configuration.
NTYPE		1	Number of noise types in a configuration. (Note: NTYPE must be specified only in the first $NOISIN data set of each configuration for the first case of a run.)

Variable Name	Units	Default	Description
NUM9			Number of discharge elements of suppressor nozzle.
PA9	$m^2(ft^2)$		Discharge area of ejector (required only if IEJ9 $\neq$ 0).
PCV9			Velocity coefficient for ejector (required only if IEJ9 $\neq$ 0).
PS9	ATM(psia)		Static pressure in exhaust at nozzle (required only if IEJ9 $\neq$ 0).
SMACH9			Mach number of induced secondary air.
ST9	K(°R)		Static temperature at nozzle exit.

4.3.9 PROPELLER NOISE

This section describes the subset of the $NOISIN parameters used to estimate propeller noise using the emprical procedure defined in NASA-CR114649. The next section describes inputs for the theoretical rotor procedure which may be used in lieu of this module. These inputs are needed in addition to the appropriate $GDATA parameters described previously. (Note: For ΔdB corrections, see sec. 4.3.1 on lining attenuation and configuration corrections.)

Variable Name	Units	Default	Description
ASUB10	$m^2(ft^2)$		Total blade area for one side of propeller.
B10			Number of propeller blades.
D10	m(ft)		Propeller diameter.
DELT10	deg	0	Angle between gross thrust vector and horizon.
DSUB10	m(ft)		Characteristic dimension for the blade geometry at 0.7 span; i.e., the axial projected chord.
ITYPE			ITYPE = 10 for propeller noise. This variable must be specified in the first case for each noise type for each configuration.
NENG		1	Number of engines. If other than one, this must be specified for the first case for each configuration.
NTYPE		1	Number of noise types in a given configuration. (Note: NTYPE must

Variable Name	Units	Default	Description
			be specified only in the first $NOISIN data set of each configuration for the first case of a run).
RPM10	RPM		Propeller rotational speed.
T10	N(lbf)		Propeller thrust.
W10	kW(HP)		Propeller shaft power.

4.3.10 HELICOPTER, PROPELLER, AND TILT ROTOR NOISE

This section describes the subset of the $NOISIN parameters used to estimate helicopter, propeller, and tilt rotor noise based on the theoretical procedures defined in section 5.2.5.2 of NASA CR114649. These inputs are needed in addition to the appropriate $GDATA parameters described previously. (Note: For ΔdB corrections, see sec. 4.3.1 on lining attenuation and configuration corrections.)

Variable Name	Units	Default	Description
AB11	$m^2(ft^2)$		Total blade area of one side of rotor.
B11			Number of blades per rotor, ($2. \leq B11 \leq 6.$).
CEE11		24.4	Constant (c) in loading law (eq. 51 of NASA-CR114649). This variable and variables XMM11 and XLMC11 must be specified when LLF11 = 6.
DELT11	deg		Angle between gross thrust vector and horizon. (Applies only to the main rotor.)
DE11	m(ft)		Characteristic dimension for the blade geometry at 0.7 span; i.e., the mean axial projected chord.
DT11	m(ft)		Tip diameter.
ITYPE			ITYPE = 11 for helicopter noise. This variable must be specified in the first case for each noise type for each configuration.
IRR11		0	Indicator for specifying if the rotor being considered is the main rotor or tail rotor. IRR11 = 0 for main rotor IRR11 ≠ 0 for tail rotor (Note: If the tail rotor is being

Variable Name	Units	Default	Description
			considered, the thrust axis is assumed horizontal and perpendicular to the helicopter's flightpath.)
LLF11		2	Loading law indicator. (See NASA CR114649 for equations.) LF11 = 1 applying to hovering helicopter (eq. 50A) LF11 = 2 applying to helicopters and tilt rotors (eq. 50B) LF11 = 3 applying to low speed propellers (eq. 50C) LLF11 = 4 applying to low speed propellers (eq. 50D) LLF11 = 5 applying to medium speed propellers (eq. 50E) LF11 = 6 user inputs loading law parameters (eq. 51)
NENG		1	Number of engines; i.e., rotors. If other than 1, this must be specified for the first noise component of each type of propulsion system.
NTYPE		1	Number of noise types in the configuration. (Note: NTYPE must be specified only in the first $NOISIN data set of each configuration for the first case of a run.)
Q11	N-m(ft-lbf)		Shaft torque.
RN11		0.8	Dimensionless centroid for equivalent point load on a rotor blade.
RPM11	RPM		Rotor rotational speed.
SI11		5.0	Lift curve slope for a single blade (applies if LLF11 = 2).
T11	N(lbf)		Thrust per rotor.
XMM11		2.	Constants (m & λ_c) in loading law (eq. 51 of NASA CR-114649).
XLMC11		30.	Applies when LLF11 = 6.

4.3.11 MEASURED DATA INPUT

This section describes the subset of the $NOISIN parameters required for inclusion of measured data. The SPL variable described in this section is an array of sound pressure levels in dB re 20 μN/m^2 as a function of frequency (preferred 1/1 octave bands or 1/3

octave bands), a prescribed engine performance parameter, directivity angle, and elevation angle. In order to minimize core size, this SPL array is assigned to local storage in the measured data overlay and the SPL input is read in an eight field, 10 column per field decimal format rather than the NAMELIST $NOISIN format. The measured data discussed in this section is limited to one powerplant and can be specified only once during a computer run. The only variables which can change in succeeding cases are the $GDATA parameters, DELT12, and the configuration corrections discussed in section 4.3.1.

Refer to section 3.3.2 of NASA-CR114650 for sample input data which includes measured data.

Variable Name	Units	Default	Description
BETA12(1) ... BETA12(N)	deg ... deg		Independent variable array of elevation angles used to correlate the measured SPL's. Axial symmetric sound sources will have no BETA12 entries indicated by NBTA12 = 0. N = NBTA12.
DELT12	deg	0	Engine inclination angle.
EP12(1) ... EP12(N)			Independent variable array of engine perforamnce parameters needed to correlate the measured SPL's. N = NEP12.
ITYPE			ITYPE = 12 for measured data. This variable must be specified in the first case for each noise type for each configuration.
NBTA12		0	Number of enties in the BETA12 data array, (NBTA12 = 0 or 2 ≤ NBTA12 ≤ 5).
NEP12			Number of entries in the EP12 data array, (2 ≤ NEP12 ≤ 5).
NPSI12			Number of entries in the PSI12 data array, (2 ≤ NPSI12 ≤ 17).
NTYPE		1	Number of noise types in a configuration. (Note: NTYPE must be specified only in the first $NOISIN data set of each configuration for the first case.)
PSI12(1) ... PSI12(N)	deg ... deg		Independent variable array of directivity angles used to correlate the measured SPL's. N = NPSI12. (Note: SPL array is input with 8F10.0 format directly following the $NOISIN data set.)

Variable Name	Units	Default	Description
SPL(1)	dB		Dependent data array of SPL's in dB for noise versus (f, PSI12, EP12, BETA12). Where f is the frequency (eight preferred 1/1 octave bands or twenty-four 1/3-octave bands) defined in table 4 of NASA-CR114649. Inputs are for free-field noise conditions at R = 1 m.
...	...		
SPL(N)	dB		Note: SPL(n) = F(I, J, K, L) where $n = I + k_1 (J-1 + k_2 (K-1 + k_3) (L-1))$ k_1 = 24 for 1/3-octave band analysis = 8 for full octave band analysis k_2 = NPSI12 k_3 =NEP12 (I, J, K, L) are indices corresponding to (f, PSI12, EP12, BETA12) where frequency is varied first, then the directivity angle, then the engine performance parameter, and finally the elevation angle.

4.3.12 JET/EDGE INTERACTION NOISE*

This section describes the subset of the $NOISIN data set used to estimate jet edge interaction noise. These inputs are needed in addition to the appropriate $GDATA parameters described previously. (For ΔdB correction, refer to sec. 4.3.1 lining attenuation and configuration corrections.)

Variable Name	Units	Default	Description
ITYPE			ITYPE = 13 for jet edge interaction noise prediction. This variable must be specified in the first case for each noise component for each configuration.
NENG		1	Number of engines. If other than 1, this must be specified for the first noise component of each type of propulsion system.
NTYPE		1	Number of noise components in the configuration. (Note: NTYPE must be specified only in the first NOISIN data set of each configuration for the first case of a run.)

Variable Name	Units	Default	Description
EDGVAR(1)			Nondimensional distance between nozzle exit to the wing/flap systems trailing edge measured along the wing/flap surface (L/D).
EDGVAR(2)			Jet Mach number.
EDGVAR(3)	m(ft)		Hydraulic diameter of jet nozzle (D) (equals four times discharge area divided by nozzle perimeter).
EDGVAR(4)			Jet static temperature ratio (T_s/T_{so} where T_{so} is 288.2 K or 518.7 °R).
EDGVAR(5)			Not used.
EDGVAR(6)	deg	5.7	Jet spreading angle.
EDGVAR(7)		0.7854	Nondimensional discharge area (A/D^2).
EDGVAR(8)		0.	Nondimensional nozzle lip height above wing surface (H/D).
EDGVAR(9)		5.	Nondimensional jet core length (L_c/D). The default is for round nozzle.
EDGVAR(10)	deg	0.	Nominal flap angle or angle of attack when the flaps are retracted.

4.4 NOISE COMPONENT SHIELDING PARAMETERS* ($SHLDAT INPUT DATA SET)

If noise shielding is specified for the particular engine/wing configuration (INSEOW in $GDATA) and for the particular noise components (INSHLD = 1 in $NOISIN) then the data set $SHLDAT must follow the $NOISIN data set. The $SHLDAT data set contains the shielding inputs for the noise component specified in the $NOISIN data set. The noise components which can include shielding effects are:

Noise Component	ITYPE
Primary jet	1
Primary and secondary jet	2
Core and turbine	3
Inlet fan or compressor	4
Exit fan	5

Variable Name	Units	Component ITYPE	Default	Description
ASF	deg	3,5	13.	Empirical constant γ in formula for computing the angular shift of the apparent sound source due to exhaust flow. (See fig. A-10.)
BETA(I)		3,5	Fig. A-10	One-dimensional array used to define the dependent variable β in the emprical curve β versus $\cot(\psi_0)$ of figure A-10. Values of BETA represent the radial offset of a hypothetical line parallel to the wing's equivalent half-plane used to locate the apparent sound source, ($1 \leq I \leq$ INASRO).
CPSIO(I)		3,5	Fig. A-10	One-dimensional array used to define the independent variable $\cot(\psi_0)$ in the emprical curves β versus $\cot(\psi_0)$ and α versus $\cot(\psi_0)$. Values of CPSIO represent the cotangent of the directivity angle (ψ_0), relative to the engine inlet centerline, grazing the wing edge for the shortest sound propagation path from the nozzle exit to the edge to the observer, ($2 \leq I \leq$ INASRO).
DIAMT2	m(ft)	2		Diameter of nozzle (secondary jet). If noncircular, use hydraulic diameter.
DSL1		1,2		Nondimensional shield length measured parallel to the exhaust axis from the nozzle exit plane. (L_1/D_1) primary jet.

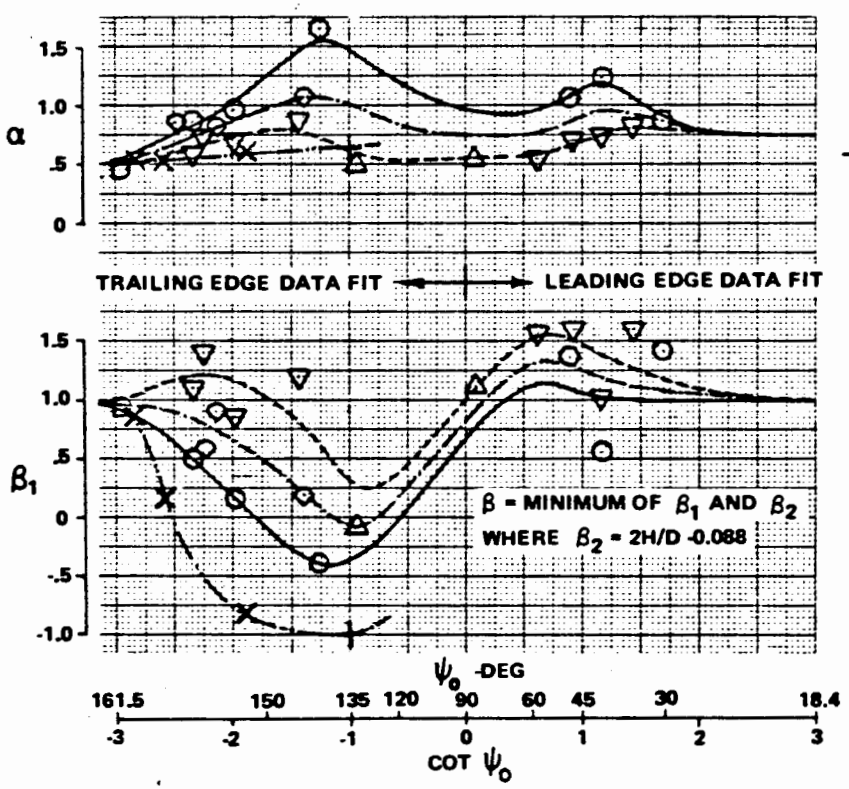

LEGEND	SYM	DATA SOURCE	WING GEOM
———	○	JT9D FAN TONE	FLYOVER
- - - - - -	▽,△	JT9D TURBINE TONE	FLYOVER, 25° WING
—·—·—	▽	JT9D CORE NOISE	FLYOVER
··—··—	X,+	DUAL FLOW MODEL WHISTLE IN SEC.	FLYOVER, 25° WING
	D	SAME EXCEPT "D" NOZZLE (ATTACHED FLOW)	FLYOVER

FLYOVER ILLUSTRATION

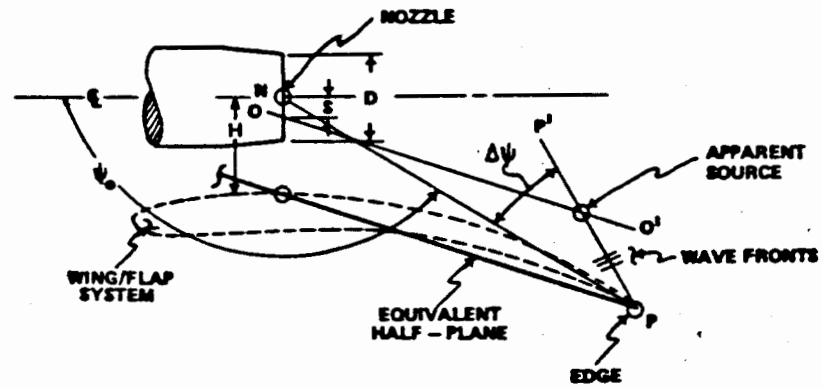

NOTES

1) LINE N-P REPRESENTS DIRECTION FOR SHORTEST PATH FROM NOZZLE TO EDGE TO OBSERVER

2) LINE P-P' REPRESENTS DIRECTION ACOUSTIC WAVES LEAVE THE JET EXHAUST

3) LINE O-O' IS THE INTERSECTION OF TWO PLANES: ONE PLANE IS PARALLEL TO H.P. AND DISPLACED A DISTANCE S FROM NOZZLE. THE OTHER PLANE IS NORMAL TO H.P. AND CONTAINS THE ENGINE CENTERLINE

4) $\Delta\psi = \alpha(\Delta\psi_p - \gamma)$ & $S = \beta D/2$

WHERE (α, β, γ) ARE EMPIRICAL ADJUSTMENTS.
$\Delta\psi_p$ IS DETERMINED BY JET REFRACTION THEORY.
γ = 13° FOR FULL SCALE & "D" NOZZLE DATA
= -16° FOR DUAL FLOW MODEL DATA

Figure A-10.—Empirical Adjustments to Jet Refraction Theory for Apparent Source Position

Variable Name	Units	Component ITYPE	Default	Description
DSL2		2		Nondimensional shield length measured parallel to the exhaust axis from the nozzle exit plane. (L_2/D_2) secondary jet.
EMJ		3,5		Exhaust flow Mach number.
FASS(I)		3,5	Fig. A-10	One-dimensional array used to define the dependent variable in the empirical curve α versus $\cot(\psi_0)$ of figure A-10. Values of FASS represent the correction factor (α) in the formula for computing the angular shift of the apparent sound source due to exhaust flow, ($2 \leq I \leq$ INASRO).
INASRO		3,5	0	Number of entries in the input arrays BETA, CPSIO, and FASS used to define the empirical curves β versus $\cot(\psi_0)$ and α versus $\cot(\psi_0)$ similar to that shown in figure A-10. If INASRO is not input, then the default value 0 signals the computer to initialize the values for BETA, CPSIO, and FASS to correspond to figure A-10, ($2 \leq$ INASRO ≤ 24).
INUSP		3,4,5	0	Indicator to denote which empirical directivity curve to be used for shielding calculations. = 0 for predicted USPL versus ψ = 1 for built-in curves of figure A-11. = 2 for user input curves USPL versus PSI

Variable Name	Units	Component ITYPE	Default	Description
IWED(1)		3,4,5	0	Array of values equal to 0 or 1 where 1 indicates that the wing edge is to be considered in shielding calculations. IWED(1) denotes trailing edge IWED(2) denotes leading edge IWED(3) denotes tip edge
IWED(2)			0	
IWED(3)			0	
NUSPL		3,4,5	See note below	The number of entires in the empirical directivity curve USPL versus PSI. $3 \leq NUSPL \leq 19$.
PSI(I)	deg	3,4,5	See note below	An array of directivity angles in the empirical directivity curve USPL versus PSI, $(1 \leq I \leq NUSPL)$.
TSTSO		3,5	1.	Exhaust flow static temperatue ratio (T_s/T_{so}) where T_{so} is the ambient static temperature in absolute units (^oR or K).
USPL(I)	dB	3,4,5	See note below	An array of sound pressure levels for the empirical unshielded directivity curve USPL versus PSI, $(1 \leq I \leq NUSPL)$.

Note: The default values of the curve USPL versus PSI for the various components are based on static tests. (See fig. A-11.)

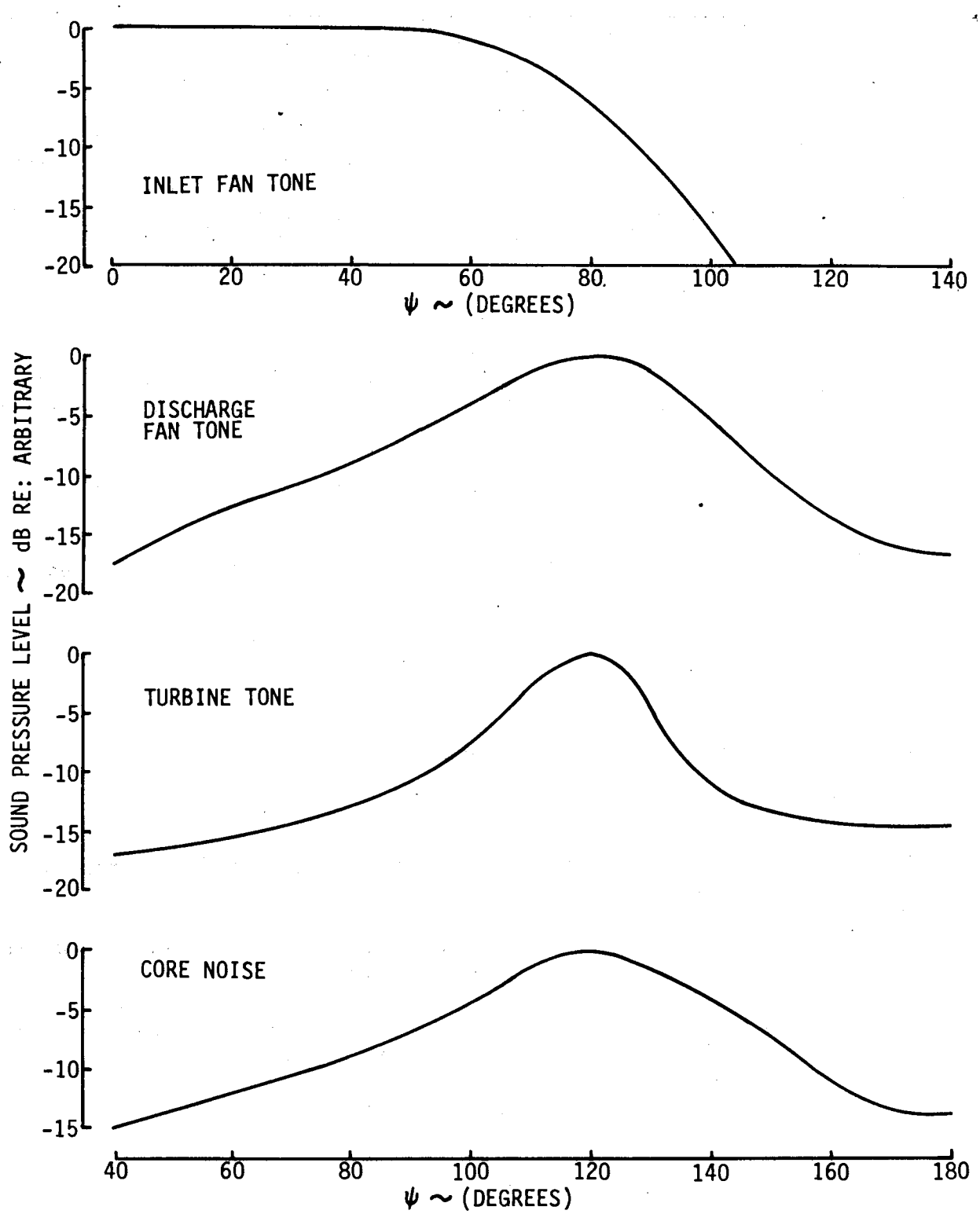

Figure A-11.—Unshielded SPL Directivity Curves for High Bypass Ratio Turbofans

5.0 OUTPUT DATA

Output data are recorded on the OUTPUT file after the execution of each case, that is, for each new set of aircraft conditions. The user has the option of requesting up to seven different reports as described in section 4.1 under General Data Parameters. The following sequence of output is printed per case when all reports are requested.

1. Total noise spectra (all components) observed at each sideline distance.

2. Assumptions for noise estimation, a summary of options.

3. First noise component spectra observed at each sideline distance for the first engine configuration. Second noise component spectra observed at each sideline distance for the first configuration.

   . . .

   Nth noise component spectra observed at each sideline distance for the first engine configuration.

   . . .

   Nth noise component spectra observed at each sideline distance for the next engine configuration.

   . . .

4. Flightpath/observer geometry
   engine/wing geometry (first configuration).

   . . .

   engine/wing geometry (next configuration, etc.)

5. Noise extrapolation corrections.

6. Total noise spectra at index conditions emitted toward the observer position at each sideline distance.

7a. First noise component spectra at index conditions emitted toward the observer positioned at each sideline distance for the first engine configuration.

7b. If applicable, estimated configuration corrections which can include measured corrections, lining corrections and wing shielding corrections.

7c. Same except for the next noise component of that engine configuration.

   . . .

   Repeat of 7a through 7c except for the next engine configuration.

This output can best be shown by a sample case. Specific engineering aspects of this sample are given in section 4.4 of the engineering analysis (vol. I).

5.1 SAMPLE CASE DESCRIPTION

This sample provides an estimation of community noise for an EOW configured aircraft. The powerplant considered is a typical high bypass ratio turbofan. This sample corresponds to the example illustrated in section 4.4 of the engineering analysis (vol. I of this report). Further detail on the engineering aspects of this sample is reported in the section noted. The objective here is to illustrate output and some particulars on use of the computer program.

5.1.1 INPUT

This sample is composed of three cases:

- Community noise estimation for an EOW aircraft configuration using the English unit input data option
- Same as above, except using the S.I. unit input data option
- Same as above, except for an unsuppressed engine-under-wing (EUW) aircraft configuration

The first two cases use new prediction capability, whereas the last case uses the capability originally available in the software of contract NAS2-6969. The input data cards for this sample are listed in section 5.2.

A few subtleties need to be brought out about the data input shown. The noise components considered in the sample are primary and secondary jet, turbine, exit fan, jet/edge interaction, inlet fan and core noise. The data for these noise components are input as though the noise is produced by two different engine/wing configurations:

- Engine/wing configuration 1 considers primary and secondary jet, turbine, exit fan, and jet/edge interaction noise components
- Engine/wing configuration 2 considers inlet fan and core noise components

Actually, only one engine configuration is being considered although the data corresponds in *format* as though there are two. This manner of input is necessary to overcome some limitations noted previously:

- Section 4.3.3 for variable ISW3. Only one set of empiricisms can be used in the wing shielding calculations each time the core and turbine noise estimation module is called.
- Section 2.4.1.2 of the engineering analysis (vol. I of this report). An error will result if an attempt is made to estimate the inlet fan noise diffracting about the wing's trailing edge. The error is corrected by setting the variable IWED(1) of section 4.4 equal to zero. This error arises because of the engine/wing geometry specified indicates a reflection situation concerning the inlet position relative to

the half-plane approximating the trailing edge. No reflection situation actually exists. The signal diffracting about the trailing edge is in fact negligible compared to the total radiated inlet noise.

After the input format for the data was selected to overcome the noted limitations, the order of input for each noise component ($NOISIN cards) of each engine/wing configuration is maintained for all three cases according to the instructions given in section 4.3.

5.1.2 OUTPUT

This sample produced a large volume of printed output because all output reports were selected (see variable IOUT of sec. 4.1). The objective here is to show the pertinent format for each type of output report one can obtain, as outlined in section 5.0. An example of the printed output is given in section 5.3. In this example, only the second case in S.I. units is illustrated. To reduce this volume of printed material further, predictions for only one noise component and one observer position for the case are shown. A complete printout for the sample can be obtained by simply executing the computer program using the sample input data shown.

5.2 SAMPLE INPUT

```
     SHIELDING CHECKOUT TEST    BPR=5, T.O. POWER(ENGLISH UNITS)
$GDATA  AMACH=.25,IATMOS=4,CPRES=14.7,CRHUMD=70.0,CTEMP=536.7,EPP=0.,
        IDOP=2,ICUT(1)=1,2,3,4,5,6,7,FLR=0.,ISPTRM=0,IUNIT=1,
        NOBS=2,NTENG=2,SLDIST(1)=0.,2128.,ALTPG=1000.,INSEOW(1)=1,1,0$
$EWDATA SWPTE=10.,SWPLE=28.,DIHED=3.,DDSD=8.1,DDX1D=3.1 ,DDX2D=1.5 ,
        DDXOD=0.,DDY1D=0.84,DDY2D=0.28,DDYOD=.75,DDLD=4.0,DIANE=6.42$
     JET(P + S),TURBINE,AFT FAN,JET EDGE INTERACTION COMPONENTS
$NOISIN NTYPE=4,NENG=2,ITYPE=2,NJET1=3,MCODE1=2,
        AP1=6.65,VP1=1370.,WP1=263.,AS2=20.04,VS2=919.9,WS2=1312.,
        INSHLD=1,DIAMT1=3.96$
$SHLDAT DSL1=5.38,DSL2=3.32,DIAMT2=6.42$
$NOISIN ITYPE=3,ISW3=3,IC3=0,BN3=110.,CS3=.66,PMF3=263.,
        SS3=3404.,TU3=1478.,VTR3=726.9$
$SHLDAT EMJ=0.46,TSTSO=2.55,IWED(1)=1,1,1$
$NOISIN ITYPE=5,NSTG45=1,FPR45(1)=1.55,NB45(1)=46,RN145=3404.,
        RSS45(1)=300.,RTS45=1.34,AREA5(1)=20.04,BPR5=5.,NI5=2$
$SHLDAT EMJ=0.82,TSTSO=1.05,IWED(1)=1,1,1$
$NOISIN ITYPE=13,EDGVAR(1)=3.1 ,.82,6.42,1.05,0.,5.7,.7854,.25,5.,0.$
$EWDATA SWPTE=10.,SWPLE=28.,DIHED=3.,DDSD=8.1,DDX1D=3.1 ,DDX2D=1.5 ,
        DDXOD=0.,DDY1D=0.84,DDY2D=0.28,DDYOD=.75,DDLD=4.0,DIANE=6.42$
     INLET FAN AND CORE NOISE COMPONENTS
$NOISIN NTYPE=2,NENG=2,ITYPE=4,NSTG45=1,FPR45(1)=1.55,NB45(1)=46,
        RN145=3404.,RSS45(1)=300.,RTS45=1.34,CFPR4=1.29,
        LIN4=1,CF4=1116.,EDH4=3.8,ELOH4=1.5,FM4=-0.4,IDP4=2,
        ILAY4=2,NWL4=1,DIAM4(1)=7.69,INSHLD=1$
$SHLDAT IWED(1)=0,1,1,INUSP=0$
$NOISIN ITYPE=3,ISW3=2,CMF3=29.2,EK3=2.,JB3=1,PP3=13.94,TT3=2795.$
$SHLDAT EMJ=0.46,TSTSO=2.55,IWED(1)=1,1,1$
     SHIELDING CHECKOUT TEST    BPR=5, T.O. POWER(MKS UNITS)
$GDATA  CPRES=1.0,CRHUMD=70.,CTEMP=298.2,IUNIT=0,
        SLDIST(1)=0.,648.6,ALTPG=304.8$
$EWDATA DIANE=1.957$
     JET(P + S),TURBINE,AFT FAN,JET EDGE INTERACTION COMPONENTS
$NOISIN AP1=.618,VP1=417.6,WP1=119.3,AS2=1.862,VS2=280.4,WS2=595.1,
        DIAMT1=1.207$
$SHLDAT DIAMT2=1.957$
$NOISIN PMF3=119.3,TU3=821.1,VTR3=221.6$
$SHLDAT $
$NOISIN AREA5(1)=1.862$
$SHLDAT $
$NOISIN EDGVAR(3)=1.957$
$EWDATA DIANE=1.957$
     INLET FAN AND CORE  NOISE COMPONENTS
$NOISIN DIAM4(1)=2.344,CF4=340.2,EDH4=1.158$
$SHLDAT $
$NOISIN TT3=1552.8,CMF3=13.24$
$SHLDAT $
     SAME AS TEST CHECKOUT WITHOUT SHIELDING AND NO LINING
$GDATA INSEOW(1)=0,0,0$
     JET(PRIMARY AND SECONDARY),TURBINE,AFT FAN COMPONENTS
$NOISIN NTYPE=4,INSHLD=0$
$NOISIN $
$NOISIN $
$NOISIN EDGVAR(2)=.3$
     INLET FAN AND CORE COMPONENTS
$NOISIN LIN4=0,INSHLD=0$
$NOISIN $
```

PROGRAM TEE330A
AIRCRAFT NOISE PREDICTION

DATE
76/04/22.
YR/MO/DA

CASE NO. 2

SHIELDING CHECKOUT TEST BPR=5, T.O. POWER(MKS UNITS)

TOTAL NOISE (ALL COMPONENTS)
OBSERVED SPECTRA AT SIDELINE DISTANCE= 6.486E+02 M.

SOUND PRESSURE LEVELS
(DB RE. 20 MICRO-N/SQ.M.)

FREQUENCY (KHZ)																	
5.012E-02	57.8	66.3	70.2	72.3	73.5	74.1	74.2	73.6	74.5	74.7	74.8	74.9	75.4	76.5	76.3	72.4	65.0
6.310E-02	57.8	66.6	70.4	72.5	73.7	74.3	74.3	73.7	74.7	74.9	74.9	74.9	75.3	76.1	75.7	71.6	64.2
7.943E-02	56.3	65.5	69.3	71.7	73.3	74.1	74.2	73.6	74.7	74.8	74.7	74.7	74.9	75.2	74.2	69.9	62.8
1.000E-01	54.3	64.2	68.1	70.9	72.8	73.7	74.0	73.4	74.4	74.4	74.3	74.2	74.2	74.0	72.6	68.3	61.4
1.259E-01	52.2	63.0	67.1	70.3	72.5	73.5	73.7	73.0	73.8	73.6	73.4	73.3	73.2	72.6	71.0	66.5	59.7
1.585E-01	50.3	61.8	66.1	69.6	72.0	73.1	73.2	72.4	72.8	72.4	72.0	72.0	71.8	71.1	69.5	64.8	57.8
1.995E-01	48.1	60.4	64.9	68.8	71.4	72.6	73.0	72.2	71.8	71.1	70.5	70.4	70.1	69.5	67.9	62.7	55.3
2.512E-01	45.6	58.9	63.8	68.0	71.5	72.9	73.8	73.0	71.1	69.8	68.8	68.5	68.2	67.8	66.1	60.3	52.5
3.162E-01	42.8	57.1	62.7	67.8	72.6	74.7	76.1	75.7	71.3	68.8	67.1	66.6	66.1	66.0	64.0	57.5	48.9
3.981E-01	39.8	55.5	62.5	69.1	75.4	76.6	77.4	75.6	69.9	66.8	65.0	64.5	64.0	64.0	61.7	54.6	44.7
5.012E-01	36.0	53.3	61.0	67.4	73.1	74.6	75.6	74.2	69.1	65.3	62.9	62.3	61.8	62.0	58.9	51.9	39.9
6.310E-01	31.1	50.1	58.8	66.0	72.4	74.9	76.2	75.9	70.0	64.5	60.7	60.1	59.6	59.9	55.9	49.3	34.9
7.943E-01	26.3	47.5	58.1	66.6	74.4	75.7	75.7	73.5	66.6	61.9	58.6	57.9	57.4	57.9	53.8	45.7	29.0
1.000E+00	20.7	44.1	55.2	62.8	69.1	70.4	71.1	69.2	64.4	59.8	56.4	55.7	55.2	55.9	53.1	41.9	21.4
1.259E+00	13.1	39.1	50.4	58.3	64.7	67.1	68.5	67.3	62.9	58.0	54.1	53.4	52.9	53.9	51.7	38.2	13.1
1.585E+00	4.7	34.2	46.9	55.5	62.6	65.2	66.1	65.0	61.0	55.8	51.7	51.1	50.5	51.8	46.2	32.5	4.0
1.995E+00	-5.4	28.8	42.7	51.3	57.7	60.8	62.7	62.4	60.0	53.8	49.5	49.1	54.4	56.1	50.2	35.0	-.1
2.512E+00	-18.4	21.9	37.5	46.4	53.0	57.2	60.4	66.1	63.4	57.7	52.6	50.9	45.1	47.1	42.1	22.1	-19.1
3.162E+00	-35.1	13.5	34.4	44.0	51.7	58.8	62.8	59.4	56.5	48.4	43.4	41.7	41.3	43.6	36.5	15.4	-34.7
3.981E+00	-54.4	5.4	24.9	36.6	44.4	50.3	54.7	56.7	54.4	46.0	39.8	37.7	39.0	41.8	32.1	7.4	-52.1
5.012E+00	-69.4	-2.6	21.5	34.3	42.8	49.2	53.2	57.7	55.4	46.5	39.5	36.2	33.6	34.7	24.4	-3.5	-71.2
6.310E+00	-101.8	-18.1	12.6	28.0	38.2	46.1	49.5	49.4	47.3	36.3	29.3	27.0	25.4	27.1	14.6	-18.6	-103.8
7.943E+00	-149.6	-41.5	-4.9	14.0	25.6	33.4	39.3	40.9	40.2	28.6	20.4	13.8	12.7	12.3	-5.1	-45.2	-153.7
1.000E+01	-225.6	-80.3	-30.5	-5.7	9.5	19.9	23.6	26.2	26.5	13.3	4.2	-.3	-4.9	-8.9	-33.2	-84.3	-228.7

XI (DEG)	10.0	20.0	30.0	40.0	50.0	60.0	70.0	80.0	90.0	100.0	110.0	120.0	130.0	140.0	150.0	160.0	170.0
PNL (PNDB)	54.7	70.1	77.4	83.7	89.3	91.2	92.4	91.7	88.9	84.7	82.8	82.4	82.2	82.3	79.7	72.5	62.5
TCPNL(PNDB)	56.6	71.0	77.4	83.7	90.5	92.9	94.1	93.4	90.6	86.9	84.9	84.3	84.4	84.5	81.7	75.1	64.2
T (SEC)	-28.6	-13.6	-8.2	-5.3	-3.3	-1.7	-.4	.8	2.1	3.4	4.8	6.5	8.7	11.7	16.5	25.7	52.4

EPNL*(EPNDB) = 89.7 BASED ON MIN/MAX PNL = 82.4, 92.4 PNDB AND TIME LIMITS = -5.9, 6.8 SEC
EPNL (EPNDB) = 91.8 BASED ON MIN/MAX TCPNL = 84.1, 94.1 PNDB AND TIME LIMITS = -5.2, 12.3 SEC

ENG.PERF.PARM.= 0. , RANGE AT CPA = 7.166E+02 M., ELEV.ANGLE = 2.517E+01 DEG.

PROGRAM TEE330A
AIRCRAFT NOISE PREDICTION

DATE
76/04/22.
YR/MO/DA

CASE NO. 2

SHIELDING CHECKOUT TEST BPR=5, T.O. POWER(MKS UNITS)

ASSUMPTIONS FOR NOISE PREDICTION

1) GEOMETRIC-MEAN PASSBAND FREQUENCIES (KHZ)

5.012E-02	6.310E-02	7.943E-02	1.000E-01	1.259E-01	1.585E-01	1.995E-01	2.512E-01	3.162E-01	3.981E-01	5.012E-01	6.310E-01
7.943E-01	1.000E+00	1.259E+00	1.585E+00	1.995E+00	2.512E+00	3.162E+00	3.981E+00	5.012E+00	6.310E+00	7.943E+00	1.000E+01

2) ATMOSPHERIC ABSORPTION COEFFICIENTS (DB /KM)

.29	.37	.46	.58	.73	.92	1.16	1.46	1.84	2.32	2.93	3.69
4.66	5.90	7.46	9.46	12.02	15.30	19.54	25.06	28.42	36.71	48.73	66.95

3) ATMOSPHERIC CONDITIONS
HOMOGENEOUS ATMOSPHERE OF (298.20 DEG K, 1.00 ATM., 70.00 PCT RH)

4) ITEMS CONSIDERED IN NOISE EXTRAPOLATION
A) SPHERICAL DIVERGENCE ..... YES
B) ATMOSPHERIC ABSORPTION ..... YES
C) EXTRA-GROUND ATTENUATION ..... YES
SOUND PROPAGATION IS DOWNWIND (16 KMPH).
D) GROUND REFLECTION ..... NO
3 DB ADDED TO FREE FIELD SPECTRA INSTEAD.

5) NOISE COMPONENTS CONSIDERED

		NO. OF TIMES
A) PRIMARY AND SECONDARY JET	MODULE	1
B) CORE/TURBINE	MODULE	2
C) COMPRESSOR AND INLET FAN	MODULE	1
D) EXIT FAN	MODULE	1
E) JET EDGE INTERACTION	MODULE	1

PROGRAM TEE330A
AIRCRAFT NOISE PREDICTION

DATE
76/04/22.
YR/MO/DA

CASE NO. 2

SHIELDING CHECKOUT TEST BPR=5, T.O. POWER(MKS UNITS)
JET(P + S),TURBINE,AFT FAN,JET EDGE INTERACTION COMPONENTS
TURBINE NOISE
OBSERVED SPECTRA AT SIDELINE DISTANCE= 6.486E+02 M.

SOUND PRESSURE LEVELS
(DB RE. 20 MICRO-N/SQ.M.)

FREQUENCY (KHZ)																	
5.012E-02	21.6	31.0	36.1	39.9	42.9	44.9	46.1	46.8	48.3	49.1	48.7	46.4	42.7	38.9	34.1	27.9	18.7
6.310E-02	21.1	30.9	36.1	40.0	43.0	45.2	46.5	47.2	48.7	49.5	49.1	46.9	43.2	39.3	34.6	28.2	18.9
7.943E-02	20.3	30.5	35.9	40.0	43.2	45.5	46.8	47.5	49.1	49.8	49.4	47.3	43.6	39.7	35.0	28.5	18.9
1.000E-01	19.5	30.2	35.7	39.9	43.3	45.8	47.2	47.8	49.4	50.1	49.7	47.6	44.0	40.1	35.3	28.7	18.8
1.259E-01	18.4	29.7	35.5	39.9	43.4	46.0	47.5	48.1	49.7	50.3	49.9	47.9	44.4	40.4	35.5	28.7	18.4
1.585E-01	17.1	29.1	35.2	39.8	43.5	46.3	47.8	48.4	49.9	50.4	50.0	48.1	44.7	40.7	35.7	28.6	17.8
1.995E-01	15.6	28.5	34.8	39.7	43.6	46.5	48.0	48.6	50.0	50.4	49.9	48.1	44.9	41.0	35.7	28.3	17.0
2.512E-01	14.0	27.8	34.4	39.6	43.7	46.7	48.3	48.7	50.0	50.4	49.9	48.1	45.1	41.2	35.7	27.9	15.9
3.162E-01	12.1	26.9	33.9	39.4	43.7	46.9	48.4	48.7	50.0	50.4	49.9	48.0	45.1	41.2	35.4	27.1	14.3
3.981E-01	9.5	25.9	33.3	39.2	43.6	46.9	48.4	48.7	50.1	50.3	49.7	47.9	44.9	41.2	34.8	25.7	11.9
5.012E-01	6.5	24.5	32.5	38.7	43.4	46.9	48.3	48.8	50.0	49.9	49.2	47.6	44.7	40.9	33.8	23.4	8.4
6.310E-01	3.0	22.6	31.4	38.1	43.0	46.7	48.1	48.7	49.6	49.4	48.6	47.1	44.5	40.4	32.3	20.0	3.9
7.943E-01	-1.8	20.4	30.0	37.3	42.5	46.4	48.0	48.5	49.4	48.9	47.9	46.6	44.2	39.8	30.7	16.5	-.8
1.000E+00	-7.4	17.7	28.3	36.2	41.7	45.7	47.7	48.2	48.8	48.0	46.8	45.6	43.5	38.8	29.3	15.2	-5.1
1.259E+00	-14.2	14.5	26.2	34.8	40.7	45.0	47.1	47.7	48.1	46.8	45.4	44.4	42.7	37.5	28.5	15.1	-9.4
1.585E+00	-22.6	10.3	23.5	33.0	39.3	43.9	46.2	47.0	47.1	45.2	43.5	42.8	41.6	35.9	27.3	12.7	-15.9
1.995E+00	-32.6	5.4	20.4	30.8	37.6	42.6	45.2	46.1	45.7	43.3	41.3	40.9	40.2	34.0	24.4	7.4	-26.9
2.512E+00	-44.6	-.8	16.5	28.0	35.4	40.7	43.7	44.7	43.9	40.8	38.5	38.3	38.3	31.5	19.0	1.5	-41.1
3.162E+00	-60.3	-8.8	11.2	24.2	32.4	38.2	41.7	42.8	41.5	37.7	35.2	35.0	35.8	28.0	14.8	-5.6	-54.9
3.981E+00	-81.6	-19.0	4.4	19.4	28.6	35.0	39.0	40.2	38.4	34.1	31.3	30.8	32.3	23.3	9.0	-19.0	-76.3
5.012E+00	-95.2	-24.6	.5	16.7	26.5	33.4	37.8	39.2	36.9	32.1	28.8	29.2	31.4	20.9	5.2	-21.7	-90.4
6.310E+00	-128.4	-40.2	-9.9	9.1	20.4	28.3	34.1	35.5	32.7	27.6	23.1	19.9	22.6	9.9	-8.5	-42.3	-126.9
7.943E+00	-175.9	-63.4	-25.1	-2.1	11.2	19.9	24.8	25.9	22.4	15.4	10.4	8.1	10.7	-4.5	-26.9	-67.8	-176.3
1.000E+01	-250.7	-101.4	-51.3	-23.2	-6.9	3.8	10.6	12.4	8.5	.7	-4.4	-7.9	-6.3	-25.0	-53.7	-105.8	-250.7
XI (DEG)	10.0	20.0	30.0	40.0	50.0	60.0	70.0	80.0	90.0	100.0	110.0	120.0	130.0	140.0	150.0	160.0	170.0
PNL (PNDB)	0.0	31.8	45.0	54.0	60.7	65.5	68.2	69.1	68.9	67.2	65.7	64.5	63.0	56.9	47.1	31.4	0.0
TCPNL(PNDB)	0.0	32.9	45.6	54.6	60.7	65.5	68.2	69.1	68.9	67.2	65.7	64.5	63.0	56.9	48.2	33.3	0.0
T (SEC)	-28.6	-13.6	-8.2	-5.3	-3.3	-1.7	-.4	.8	2.1	3.4	4.8	6.5	8.7	11.7	16.5	25.7	52.4

EPNL*(EPNDB) = 67.6 BASED ON MIN/MAX PNL = 59.1, 69.1 PNDB AND TIME LIMITS = -3.8, 10.6 SEC
EPNL (EPNDB) = 67.6 BASED ON MIN/MAX TCPNL = 59.1, 69.1 PNDB AND TIME LIMITS = -3.8, 10.6 SEC

ENG.PERF.PARM.= 0. , RANGE AT CPA = 7.166E+02 M., ELEV.ANGLE = 2.517E+01 DEG.

PROGRAM TEE330A
AIRCRAFT NOISE PREDICTION

DATE
76/04/22.
YR/MO/DA

CASE NO. 2

SHIELDING CHECKOUT TEST BPR=5, T.O. POWER(MKS UNITS)

F L I G H T P A T H / O B S E R V E R G E O M E T R Y

AIRPORT ALTITUDE = 0. M.

AIRCRAFT MACH NUMBER = 2.900E-01 , CLIMB GRADIENT = 0. FOR (Z .GT. ZR)
AIRCRAFT HEIGHT (ZO) = 3.048E+02 M. AT T = 0, OBSERVER HEIGHT (ZR) = 0. M.
SPEED OF SOUND = 3.462E+02 MPS AT (ZO) , SPEED OF SOUND = 3.462E+02 MPS AT (ZR)
AVERAGE SPEED OF SOUND = 3.462E+02 MPS FOR SOUND PROPAGATION OVER RANGE (P)

SIDELINE DISTANCE (X) = 0. M.

TIME (SEC) SOUND REC.	SOUND XMIT.	ANGLE XI (DEG.)	A/C COORDINATES Y (M.)	Z (M.)	PROPAGATION DISTANCE P (M.)	DP/P FOR GRD.REFLX.	ANGLES FOR NOISE EXTRAPOLATION BETA 1 (DEG.)	BETA 2 (DEG.)
-12.1	-17.2	10.	-1.729E+03	3.048E+02	1.755E+03	0.	1.000E+01	1.000E+01
-5.8	-8.3	20.	-8.374E+02	3.048E+02	8.912E+02	0.	2.000E+01	2.000E+01
-3.5	-5.3	30.	-5.279E+02	3.048E+02	6.096E+02	0.	3.000E+01	3.000E+01
-2.2	-3.6	40.	-3.632E+02	3.048E+02	4.742E+02	0.	4.000E+01	4.000E+01
-1.4	-2.5	50.	-2.558E+02	3.048E+02	3.979E+02	0.	5.000E+01	5.000E+01
-.7	-1.8	60.	-1.760E+02	3.048E+02	3.520E+02	0.	6.000E+01	6.000E+01
-.2	-1.1	70.	-1.109E+02	3.048E+02	3.244E+02	0.	7.000E+01	7.000E+01
.4	-.5	80.	-5.374E+01	3.048E+02	3.095E+02	0.	8.000E+01	8.000E+01
.9	0.0	90.	0.	3.048E+02	3.048E+02	0.	9.000E+01	9.000E+01
1.4	.5	100.	5.374E+01	3.048E+02	3.095E+02	0.	8.000E+01	8.000E+01
2.0	1.1	110.	1.109E+02	3.048E+02	3.244E+02	0.	7.000E+01	7.000E+01
2.8	1.8	120.	1.760E+02	3.048E+02	3.520E+02	0.	6.000E+01	6.000E+01
3.7	2.5	130.	2.558E+02	3.048E+02	3.979E+02	0.	5.000E+01	5.000E+01
5.0	3.6	140.	3.632E+02	3.048E+02	4.742E+02	0.	4.000E+01	4.000E+01
7.0	5.3	150.	5.279E+02	3.048E+02	6.096E+02	0.	3.000E+01	3.000E+01
10.9	8.3	160.	8.374E+02	3.048E+02	8.912E+02	0.	2.000E+01	2.000E+01
22.3	17.2	170.	1.729E+03	3.048E+02	1.755E+03	0.	1.000E+01	1.000E+01

SIDELINE DISTANCE (X) = 6.486E+02 M.

TIME (SEC) SOUND REC.	SOUND XMIT.	ANGLE XI (DEG.)	A/C COORDINATES Y (M.)	Z (M.)	PROPAGATION DISTANCE P (M.)	DP/P FOR GRD.REFLX.	ANGLES FOR NOISE EXTRAPOLATION BETA 1 (DEG.)	BETA 2 (DEG.)
-28.6	-40.5	10.	-4.064E+03	3.048E+02	4.127E+03	0.	4.235E+00	4.235E+00
-13.6	-19.6	20.	-1.969E+03	3.048E+02	2.095E+03	0.	8.364E+00	8.364E+00
-8.2	-12.4	30.	-1.241E+03	3.048E+02	1.433E+03	0.	1.228E+01	1.228E+01
-5.3	-8.5	40.	-8.541E+02	3.048E+02	1.115E+03	0.	1.587E+01	1.587E+01
-3.3	-6.0	50.	-6.013E+02	3.048E+02	9.355E+02	0.	1.901E+01	1.901E+01
-1.7	-4.1	60.	-4.138E+02	3.048E+02	8.275E+02	0.	2.161E+01	2.161E+01
-.4	-2.6	70.	-2.608E+02	3.048E+02	7.626E+02	0.	2.356E+01	2.356E+01
.8	-1.3	80.	-1.264E+02	3.048E+02	7.277E+02	0.	2.476E+01	2.476E+01
2.1	0.0	90.	0.	3.048E+02	7.166E+02	0.	2.517E+01	2.517E+01

PROGRAM TEE330A
AIRCRAFT NOISE PREDICTION

DATE
76/04/22.
YR/MO/DA

CASE NO. 2

SHIELDING CHECKOUT TEST BPR=5, T.O. POWER(MKS UNITS)

F L I G H T P A T H / O B S E R V E R G E O M E T R Y

SIDELINE DISTANCE (X) = 6.486E+02 M.

TIME (SEC) SOUND REC.	SOUND XMIT.	ANGLE XI (DEG.)	A/C COORDINATES Y (M.)	Z (M.)	PROPAGATION DISTANCE P (M.)	DP/P FOR GRD.REFLX.	ANGLES FOR NOISE EXTRAPOLATION BETA 1 (DEG.)	BETA 2 (DEG.)
3.4	1.3	100.	1.264E+02	3.048E+02	7.277E+02	0.	2.476E+01	2.476E+01
4.8	2.6	110.	2.608E+02	3.048E+02	7.626E+02	0.	2.356E+01	2.356E+01
6.5	4.1	120.	4.138E+02	3.048E+02	8.275E+02	0.	2.161E+01	2.161E+01
8.7	6.0	130.	6.013E+02	3.048E+02	9.355E+02	0.	1.901E+01	1.901E+01
11.7	8.5	140.	8.541E+02	3.048E+02	1.115E+03	0.	1.587E+01	1.587E+01
16.5	12.4	150.	1.241E+03	3.048E+02	1.433E+03	0.	1.228E+01	1.228E+01
25.7	19.6	160.	1.969E+03	3.048E+02	2.095E+03	0.	8.364E+00	8.364E+00
52.4	40.5	170.	4.064E+03	3.048E+02	4.127E+03	0.	4.235E+00	4.235E+00

PROGRAM TEE33CA
AIRCRAFT NOISE PREDICTION

DATE
76/04/22.
YR/MO/DA

CASE NO. 2

SHIELDING CHECKOUT TEST BPR=5, T.O. POWER(MKS UNITS)
JET(P + S),TURBINE,AFT FAN,JET EDGE INTERACTION COMPONENTS

E N G I N E / W I N G G E O M E T R Y

T.E. SWEEP ANGLE	= 10.0 DEG		NOZZLE DIA. (D)	=	1.96 M.
L.E. SWEEP ANGLE	= 28.0 DEG		ENGINE LENGTH (L/D)	=	4.00
WING DIHEDRAL ANGLE	= 3.0 DEG		DIST. TO WING TIP (S/D)	=	8.10

AXIAL DISTANCE (NOZZLE REL. TO WING)/

X0 / D = 0.00 X1 / D = 3.10 X2 / D = 1.50

VERTICAL DISTANCES (NOZZLE REL. TO WING)

Y0 / D = .75 Y1 / D = .84 Y2 / D = .28

PROGRAM TEE330A
AIRCRAFT NOISE PREDICTION

DATE
76/04/22.
YR/MO/DA

CASE NO. 2

SHIELDING CHECKOUT TEST BPR=5, T.O. POWER(MKS UNITS)

NOISE EXTRAPOLATION CORRECTIONS

SPHERICAL DIVERGENCE (APPLYS TO ALL PASSBANDS)

X (M.)	SOUND PRESSURE LEVEL ATTENUATION (DB)																
0.	64.9	59.0	55.7	53.5	52.0	50.9	50.2	49.8	49.7	49.8	50.2	50.9	52.0	53.5	55.7	59.0	64.9
6.486E+02	72.3	66.4	63.1	60.9	59.4	58.4	57.6	57.2	57.1	57.2	57.6	58.4	59.4	60.9	63.1	66.4	72.3
ANGLE XI (DEG)	10.	20.	30.	40.	50.	60.	70.	80.	90.	100.	110.	120.	130.	140.	150.	160.	170.

ATMOSPHERIC ABSORPTION FOR X = 0. M.

FREQUENCY (KHZ)	SOUND PRESSURE LEVEL ATTENUATION (DB)																
5.012E-02	.5	.3	.2	.1	.1	.1	.1	.1	.1	.1	.1	.1	.1	.1	.2	.3	.5
6.310E-02	.6	.3	.2	.2	.1	.1	.1	.1	.1	.1	.1	.1	.1	.2	.2	.3	.6
7.943E-02	.8	.4	.3	.2	.2	.2	.1	.1	.1	.1	.1	.2	.2	.2	.3	.4	.8
1.000E-01	1.0	.5	.4	.3	.2	.2	.2	.2	.2	.2	.2	.2	.2	.3	.4	.5	1.0
1.259E-01	1.3	.7	.4	.3	.3	.3	.2	.2	.2	.2	.2	.3	.3	.3	.4	.7	1.3
1.585E-01	1.6	.8	.6	.4	.4	.3	.3	.3	.3	.3	.3	.3	.4	.4	.6	.8	1.6
1.995E-01	2.0	1.0	.7	.6	.5	.4	.4	.4	.4	.4	.4	.4	.5	.6	.7	1.0	2.0
2.512E-01	2.6	1.3	.9	.7	.6	.5	.5	.5	.4	.5	.5	.5	.6	.7	.9	1.3	2.6
3.162E-01	3.2	1.6	1.1	.9	.7	.6	.6	.6	.6	.6	.6	.6	.7	.9	1.1	1.6	3.2
3.981E-01	4.1	2.1	1.4	1.1	.9	.8	.8	.7	.7	.7	.8	.8	.9	1.1	1.4	2.1	4.1
5.012E-01	5.1	2.6	1.8	1.4	1.2	1.0	.9	.9	.9	.9	.9	1.0	1.2	1.4	1.8	2.6	5.1
6.310E-01	6.5	3.3	2.3	1.8	1.5	1.3	1.2	1.1	1.1	1.1	1.2	1.3	1.5	1.8	2.3	3.3	6.5
7.943E-01	8.2	4.2	2.8	2.2	1.9	1.6	1.5	1.4	1.4	1.4	1.5	1.6	1.9	2.2	2.8	4.2	8.2
1.000E+00	10.4	5.3	3.6	2.8	2.3	2.1	1.9	1.8	1.8	1.8	1.9	2.1	2.3	2.8	3.6	5.3	10.4
1.259E+00	13.1	6.7	4.5	3.5	3.0	2.6	2.4	2.3	2.3	2.3	2.4	2.6	3.0	3.5	4.5	6.7	13.1
1.585E+00	16.6	8.4	5.8	4.5	3.8	3.3	3.1	2.9	2.9	2.9	3.1	3.3	3.8	4.5	5.8	8.4	16.6
1.995E+00	21.1	10.7	7.3	5.7	4.8	4.2	3.9	3.7	3.7	3.7	3.9	4.2	4.8	5.7	7.3	10.7	21.1
2.512E+00	26.9	13.6	9.3	7.3	6.1	5.4	5.0	4.7	4.7	4.7	5.0	5.4	6.1	7.3	9.3	13.6	26.9
3.162E+00	34.3	17.4	11.9	9.3	7.8	6.9	6.3	6.0	6.0	6.0	6.3	6.9	7.8	9.3	11.9	17.4	34.3
3.981E+00	44.0	22.3	15.3	11.9	10.0	8.8	8.1	7.8	7.6	7.8	8.1	8.8	10.0	11.9	15.3	22.3	44.0
5.012E+00	49.9	25.3	17.3	13.5	11.3	10.0	9.2	8.8	8.7	8.8	9.2	10.0	11.3	13.5	17.3	25.3	49.9
6.310E+00	64.4	32.7	22.4	17.4	14.6	12.9	11.9	11.4	11.2	11.4	11.9	12.9	14.6	17.4	22.4	32.7	64.4
7.943E+00	85.5	43.4	29.7	23.1	19.4	17.2	15.8	15.1	14.9	15.1	15.8	17.2	19.4	23.1	29.7	43.4	85.5
1.000E+01	117.5	59.7	40.8	31.7	26.6	23.6	21.7	20.7	20.4	20.7	21.7	23.6	26.6	31.7	40.8	59.7	117.5
ANGLE XI (DEG)	10.	20.	30.	40.	50.	60.	70.	80.	90.	100.	110.	120.	130.	140.	150.	160.	170.

PROGRAM TEE33CA
AIRCRAFT NOISE PREDICTION

DATE
76/04/22.
YR/MO/DA

CASE NO. 2

SHIELDING CHECKOUT TEST BPR=5, T.O. POWER(MKS UNITS)

NOISE EXTRAPOLATION CORRECTIONS

ATMOSPHERIC ABSORPTION FOR X = 6.486E+02 M.

FREQUENCY (KHZ)	SOUND PRESSURE LEVEL ATTENUATION (DB)																
5.012E-02	1.2	.6	.4	.3	.3	.2	.2	.2	.2	.2	.2	.2	.3	.3	.4	.6	1.2
6.310E-02	1.5	.8	.5	.4	.3	.3	.3	.3	.3	.3	.3	.3	.3	.4	.5	.8	1.5
7.943E-02	1.9	1.0	.7	.5	.4	.4	.4	.3	.3	.3	.4	.4	.4	.5	.7	1.0	1.9
1.000E-01	2.4	1.2	.8	.6	.5	.5	.4	.4	.4	.4	.4	.5	.5	.6	.8	1.2	2.4
1.259E-01	3.0	1.5	1.0	.8	.7	.6	.6	.5	.5	.5	.6	.6	.7	.8	1.0	1.5	3.0
1.585E-01	3.8	1.9	1.3	1.0	.9	.8	.7	.7	.7	.7	.7	.8	.9	1.0	1.3	1.9	3.8
1.995E-01	4.8	2.4	1.7	1.3	1.1	1.0	.9	.8	.8	.8	.9	1.0	1.1	1.3	1.7	2.4	4.8
2.512E-01	6.0	3.1	2.1	1.6	1.4	1.2	1.1	1.1	1.0	1.1	1.1	1.2	1.4	1.6	2.1	3.1	6.0
3.162E-01	7.6	3.9	2.6	2.1	1.7	1.5	1.4	1.3	1.3	1.3	1.4	1.5	1.7	2.1	2.6	3.9	7.6
3.981E-01	9.6	4.9	3.3	2.6	2.2	1.9	1.8	1.7	1.7	1.7	1.8	1.9	2.2	2.6	3.3	4.9	9.6
5.012E-01	12.1	6.1	4.2	3.3	2.7	2.4	2.2	2.1	2.1	2.1	2.2	2.4	2.7	3.3	4.2	6.1	12.1
6.310E-01	15.2	7.7	5.3	4.1	3.5	3.1	2.8	2.7	2.6	2.7	2.8	3.1	3.5	4.1	5.3	7.7	15.2
7.943E-01	19.3	9.8	6.7	5.2	4.4	3.9	3.6	3.4	3.3	3.4	3.6	3.9	4.4	5.2	6.7	9.8	19.3
1.000E+00	24.3	12.4	8.5	6.6	5.5	4.9	4.5	4.3	4.2	4.3	4.5	4.9	5.5	6.6	8.5	12.4	24.3
1.259E+00	30.8	15.6	10.7	8.3	7.0	6.2	5.7	5.4	5.3	5.4	5.7	6.2	7.0	8.3	10.7	15.6	30.8
1.585E+00	39.0	19.8	13.6	10.5	8.9	7.8	7.2	6.9	6.8	6.9	7.2	7.8	8.9	10.5	13.6	19.8	39.0
1.995E+00	49.6	25.2	17.2	13.4	11.2	9.9	9.2	8.7	8.6	8.7	9.2	9.9	11.2	13.4	17.2	25.2	49.6
2.512E+00	63.1	32.1	21.9	17.1	14.3	12.7	11.7	11.1	11.0	11.1	11.7	12.7	14.3	17.1	21.9	32.1	63.1
3.162E+00	80.7	40.9	28.0	21.8	18.3	16.2	14.9	14.2	14.0	14.2	14.9	16.2	18.3	21.8	28.0	40.9	80.7
3.981E+00	103.4	52.5	35.9	27.9	23.4	20.7	19.1	18.2	18.0	18.2	19.1	20.7	23.4	27.9	35.9	52.5	103.4
5.012E+00	117.3	59.5	40.7	31.7	26.6	23.5	21.7	20.7	20.4	20.7	21.7	23.5	26.6	31.7	40.7	59.5	117.3
6.310E+00	151.5	76.9	52.6	40.9	34.3	30.4	28.0	26.7	26.3	26.7	28.0	30.4	34.3	40.9	52.6	76.9	151.5
7.943E+00	201.1	102.1	69.9	54.3	45.6	40.3	37.2	35.5	34.9	35.5	37.2	40.3	45.6	54.3	69.9	102.1	201.1
1.000E+01	276.3	140.3	96.0	74.6	62.6	55.4	51.1	48.7	48.0	48.7	51.1	55.4	62.6	74.6	96.0	140.3	276.3
ANGLE XI (DEG)	10.	20.	30.	40.	50.	60.	70.	80.	90.	100.	110.	120.	130.	140.	150.	160.	170.

EXTRA-GROUND-ATTENUATION FOR X = 0. M.

FREQUENCY (KHZ)	SOUND PRESSURE LEVEL ATTENUATION (DB)																
5.012E-02	.9	.8	.4	.1	0.0	0.0	0.0	0.0	0.0	0.0	0.0	0.0	0.0	.1	.4	.8	.9
6.310E-02	1.2	.9	.5	.1	0.0	0.0	0.0	0.0	0.0	0.0	0.0	0.0	0.0	.1	.5	.9	1.2
7.943E-02	1.6	1.1	.5	.1	0.0	0.0	0.0	0.0	0.0	0.0	0.0	0.0	0.0	.1	.5	1.1	1.6
1.000E-01	2.0	1.2	.6	.2	0.0	0.0	0.0	0.0	0.0	0.0	0.0	0.0	0.0	.2	.6	1.2	2.0
1.259E-01	2.5	1.4	.7	.2	0.0	0.0	0.0	0.0	0.0	0.0	0.0	0.0	0.0	.2	.7	1.4	2.5
1.585E-01	2.9	1.5	.8	.2	0.0	0.0	0.0	0.0	0.0	0.0	0.0	0.0	0.0	.2	.8	1.5	2.9
1.995E-01	3.4	1.7	.8	.2	0.0	0.0	0.0	0.0	0.0	0.0	0.0	0.0	0.0	.2	.8	1.7	3.4

PROGRAM TEE330A
AIRCRAFT NOISE PREDICTION

DATE
76/04/22.
YR/MO/DA

CASE NO. 2

SHIELDING CHECKOUT TEST BPR=5, T.O. POWER(MKS UNITS)

NOISE EXTRAPOLATION CORRECTIONS

EXTRA-GROUND-ATTENUATION FOR X = 0. M.

FREQUENCY (KHZ)	SOUND PRESSURE LEVEL ATTENUATION (DB)																
2.512E-01	3.8	1.8	.9	.3	0.0	0.0	0.0	0.0	0.0	0.0	0.0	0.0	0.0	.3	.9	1.8	3.8
3.162E-01	4.3	2.0	1.0	.3	0.0	0.0	0.0	0.0	0.0	0.0	0.0	0.0	0.0	.3	1.0	2.0	4.3
3.981E-01	4.7	2.2	1.1	.3	0.0	0.0	0.0	0.0	0.0	0.0	0.0	0.0	0.0	.3	1.1	2.2	4.7
5.012E-01	5.3	2.4	1.2	.3	0.0	0.0	0.0	0.0	0.0	0.0	0.0	0.0	0.0	.3	1.2	2.4	5.3
6.310E-01	6.0	2.6	1.3	.4	0.0	0.0	0.0	0.0	0.0	0.0	0.0	0.0	0.0	.4	1.3	2.6	6.0
7.943E-01	6.6	2.8	1.4	.4	0.0	0.0	0.0	0.0	0.0	0.0	0.0	0.0	0.0	.4	1.4	2.8	6.6
1.000E+00	7.2	3.0	1.5	.4	0.0	0.0	0.0	0.0	0.0	0.0	0.0	0.0	0.0	.4	1.5	3.0	7.2
1.259E+00	7.7	3.2	1.6	.5	0.0	0.0	0.0	0.0	0.0	0.0	0.0	0.0	0.0	.5	1.6	3.2	7.7
1.585E+00	8.2	3.4	1.8	.5	0.0	0.0	0.0	0.0	0.0	0.0	0.0	0.0	0.0	.5	1.8	3.4	8.2
1.995E+00	8.4	3.5	1.8	.5	0.0	0.0	0.0	0.0	0.0	0.0	0.0	0.0	0.0	.5	1.8	3.5	8.4
2.512E+00	8.4	3.5	1.8	.5	0.0	0.0	0.0	0.0	0.0	0.0	0.0	0.0	0.0	.5	1.8	3.5	8.4
3.162E+00	8.4	3.5	1.8	.5	0.0	0.0	0.0	0.0	0.0	0.0	0.0	0.0	0.0	.5	1.8	3.5	8.4
3.981E+00	8.4	3.5	1.8	.5	0.0	0.0	0.0	0.0	0.0	0.0	0.0	0.0	0.0	.5	1.8	3.5	8.4
5.012E+00	8.4	3.5	1.8	.5	0.0	0.0	0.0	0.0	0.0	0.0	0.0	0.0	0.0	.5	1.8	3.5	8.4
6.310E+00	8.4	3.5	1.8	.5	0.0	0.0	0.0	0.0	0.0	0.0	0.0	0.0	0.0	.5	1.8	3.5	8.4
7.943E+00	8.4	3.5	1.8	.5	0.0	0.0	0.0	0.0	0.0	0.0	0.0	0.0	0.0	.5	1.8	3.5	8.4
1.000E+01	8.4	3.5	1.8	.5	0.0	0.0	0.0	0.0	0.0	0.0	0.0	0.0	0.0	.5	1.8	3.5	8.4
ANGLE XI (DEG)	10.	20.	30.	40.	50.	60.	70.	80.	90.	100.	110.	120.	130.	140.	150.	160.	170.

EXTRA-GROUND-ATTENUATION FOR X = 6.486E+02 M.

FREQUENCY (KHZ)	SOUND PRESSURE LEVEL ATTENUATION (DB)																
5.012E-02	3.8	1.7	.9	.9	.8	.7	.6	.6	.6	.6	.6	.7	.8	.9	.9	1.7	3.8
6.310E-02	4.3	2.1	1.2	1.1	1.0	.8	.8	.7	.7	.7	.8	.8	1.0	1.1	1.2	2.1	4.3
7.943E-02	5.0	2.6	1.5	1.3	1.1	1.0	.9	.8	.8	.8	.9	1.0	1.1	1.3	1.5	2.6	5.0
1.000E-01	5.6	3.1	1.9	1.6	1.3	1.1	1.0	.9	.9	.9	1.0	1.1	1.3	1.6	1.9	3.1	5.6
1.259E-01	6.4	3.6	2.2	1.8	1.5	1.3	1.1	1.0	1.0	1.0	1.1	1.3	1.5	1.8	2.2	3.6	6.4
1.585E-01	7.2	4.1	2.6	2.1	1.7	1.4	1.2	1.2	1.1	1.2	1.2	1.4	1.7	2.1	2.6	4.1	7.2
1.995E-01	8.0	4.7	3.0	2.4	1.8	1.5	1.4	1.3	1.2	1.3	1.4	1.5	1.8	2.4	3.0	4.7	8.0
2.512E-01	8.6	5.2	3.4	2.7	2.0	1.7	1.5	1.4	1.3	1.4	1.5	1.7	2.0	2.7	3.4	5.2	8.6
3.162E-01	9.2	5.7	3.8	2.9	2.2	1.8	1.6	1.5	1.5	1.5	1.6	1.8	2.2	2.9	3.8	5.7	9.2
3.981E-01	9.8	6.2	4.1	3.2	2.4	2.0	1.8	1.7	1.6	1.7	1.8	2.0	2.4	3.2	4.1	6.2	9.8
5.012E-01	10.7	6.8	4.6	3.6	2.7	2.2	1.9	1.8	1.7	1.8	1.9	2.2	2.7	3.6	4.6	6.8	10.7
6.310E-01	11.5	7.5	5.2	3.9	2.9	2.3	2.1	1.9	1.9	1.9	2.1	2.3	2.9	3.9	5.2	7.5	11.5
7.943E-01	12.4	8.3	5.7	4.3	3.1	2.5	2.2	2.1	2.0	2.1	2.2	2.5	3.1	4.3	5.7	8.3	12.4
1.000E+00	13.0	8.8	6.2	4.7	3.4	2.7	2.4	2.2	2.2	2.2	2.4	2.7	3.4	4.7	6.2	8.8	13.0
1.259E+00	13.4	9.3	6.6	5.0	3.6	2.9	2.6	2.4	2.3	2.4	2.6	2.9	3.6	5.0	6.6	9.3	13.4
1.585E+00	13.8	9.8	7.1	5.4	3.9	3.1	2.8	2.6	2.5	2.6	2.8	3.1	3.9	5.4	7.1	9.8	13.8

PROGRAM TEE330A
AIRCRAFT NOISE PREDICTION

DATE
76/04/22.
YR/MO/DA

CASE NO. 2

SHIELDING CHECKOUT TEST BPR=5, T.O. POWER(MKS UNITS)

NOISE EXTRAPOLATION CORRECTIONS

EXTRA-GROUND-ATTENUATION FOR X = 6.486E+02 M.

FREQUENCY (KHZ)	SOUND PRESSURE LEVEL ATTENUATION (DB)																
1.995E+00	13.9	10.0	7.3	5.5	3.9	3.2	2.8	2.6	2.6	2.6	2.8	3.2	3.9	5.5	7.3	10.0	13.9
2.512E+00	13.9	10.0	7.3	5.5	3.9	3.2	2.8	2.6	2.6	2.6	2.8	3.2	3.9	5.5	7.3	10.0	13.9
3.162E+00	13.9	10.0	7.3	5.5	3.9	3.2	2.8	2.6	2.6	2.6	2.8	3.2	3.9	5.5	7.3	10.0	13.9
3.981E+00	13.9	10.0	7.3	5.5	3.9	3.2	2.8	2.6	2.6	2.6	2.8	3.2	3.9	5.5	7.3	10.0	13.9
5.012E+00	13.9	10.0	7.3	5.5	3.9	3.2	2.8	2.6	2.6	2.6	2.8	3.2	3.9	5.5	7.3	10.0	13.9
6.310E+00	13.9	10.0	7.3	5.5	3.9	3.2	2.8	2.6	2.6	2.6	2.8	3.2	3.9	5.5	7.3	10.0	13.9
7.943E+00	13.9	10.0	7.3	5.5	3.9	3.2	2.8	2.6	2.6	2.6	2.8	3.2	3.9	5.5	7.3	10.0	13.9
1.000E+01	13.9	10.0	7.3	5.5	3.9	3.2	2.8	2.6	2.6	2.6	2.8	3.2	3.9	5.5	7.3	10.0	13.9
ANGLE XI (DEG)	10.	20.	30.	40.	50.	60.	70.	80.	90.	100.	110.	120.	130.	140.	150.	160.	170.

GROUND REFLECTION FOR X = 0. M.

GROUND REFLECTION = -3 DB ATTENUATION OR +3 DB CORRECTION FOR ALL PASSBANDS.

GROUND REFLECTION FOR X = 6.486E+02 M.

GROUND REFLECTION = -3 DB ATTENUATION OR +3 DB CORRECTION FOR ALL PASSBANDS.

PROGRAM TEE33CA
AIRCRAFT NOISE PREDICTION

DATE
76/04/22.
YR/MO/DA

CASE NO. 2

SHIELDING CHECKOUT TEST BPR=5, T.O. POWER(MKS UNITS)

TOTAL NOISE (ALL COMPONENTS)
INDEX, FREE-FIELD SPECTRA (R = 1 M)

SOUND PRESSURE LEVELS
(DB RE. 20 MICRO-N/SQ.M.)

FREQUENCY (KHZ)																	
5.012E-02	132.1	132.1	131.6	131.4	131.0	130.4	129.7	128.6	129.4	129.7	130.3	131.2	132.9	135.7	137.7	138.2	139.3
6.310E-02	133.0	132.9	132.2	131.9	131.5	130.8	130.0	128.9	129.8	130.1	130.6	131.4	133.0	135.6	137.5	137.9	139.3
7.943E-02	132.5	132.5	131.6	131.5	131.3	130.8	130.1	129.0	129.9	130.2	130.6	131.5	132.9	135.0	136.5	136.9	139.0
1.000E-01	131.6	131.9	130.9	131.1	131.1	130.7	130.1	129.0	129.9	130.0	130.4	131.2	132.5	134.2	135.4	136.0	138.7
1.259E-01	130.9	131.5	130.5	130.9	131.1	130.7	130.0	128.8	129.4	129.4	129.7	130.6	131.8	133.2	134.4	135.1	138.4
1.585E-01	130.6	131.3	130.1	130.7	131.0	130.6	129.8	128.5	128.7	128.4	128.6	129.5	130.7	132.2	133.6	134.2	138.1
1.995E-01	130.1	131.0	129.7	130.4	130.8	130.5	129.9	128.5	127.9	127.4	127.3	128.2	129.5	131.1	132.7	133.2	137.4
2.512E-01	129.6	130.5	129.4	130.3	131.3	131.2	131.0	129.7	127.6	126.5	126.1	126.8	128.0	130.1	131.7	132.0	136.4
3.162E-01	129.0	130.1	129.3	130.7	133.0	133.4	133.8	132.8	128.2	125.9	124.8	125.4	126.5	128.9	130.5	130.5	135.0
3.981E-01	128.5	129.9	130.1	132.8	136.4	135.9	135.6	133.2	127.3	124.4	123.2	123.8	125.0	127.8	129.3	129.1	133.4
5.012E-01	128.1	129.7	130.0	132.2	134.9	134.6	134.4	132.3	127.1	123.5	121.7	122.3	123.6	126.8	127.8	128.3	132.0
6.310E-01	127.2	128.8	129.4	132.0	135.1	135.6	135.8	134.8	128.6	123.4	120.3	120.8	122.4	125.9	126.5	128.0	131.0
7.943E-01	127.3	129.0	130.7	134.0	138.3	137.4	136.1	133.2	126.0	121.6	119.0	119.6	121.3	125.3	126.3	127.2	130.0
1.000E+00	127.4	128.7	130.0	132.0	134.4	133.3	132.6	129.9	124.9	120.6	118.0	118.6	120.5	125.1	127.9	126.5	128.1
1.259E+00	126.6	127.5	127.9	129.6	131.8	131.5	131.4	129.4	124.7	120.1	117.1	117.9	120.0	125.2	129.2	126.6	126.6
1.585E+00	126.5	127.3	127.7	129.3	131.7	131.5	130.7	128.7	124.4	119.5	116.4	117.4	119.6	125.7	127.0	125.6	126.1
1.995E+00	127.4	127.3	127.3	128.1	129.3	129.2	129.4	128.0	125.3	119.4	116.1	117.6	126.0	132.9	134.8	133.6	132.7
2.512E+00	127.9	127.3	126.9	126.9	127.7	128.4	129.6	134.1	131.0	125.7	121.7	122.1	119.7	127.6	131.4	127.6	127.2
3.162E+00	128.8	127.9	129.8	129.2	130.4	133.5	135.2	130.5	127.2	119.5	115.8	116.4	119.9	128.8	131.9	129.7	129.2
3.981E+00	132.2	131.3	128.2	127.9	128.2	129.6	131.3	131.9	129.1	121.1	116.4	116.9	122.8	133.1	135.4	133.3	134.5
5.012E+00	131.1	130.3	129.6	129.4	129.8	131.3	132.4	135.3	132.5	124.0	118.7	118.3	120.6	129.8	132.5	129.4	129.2
6.310E+00	132.8	132.2	132.6	132.3	132.9	135.0	135.0	133.0	130.3	119.9	114.8	115.9	120.1	131.4	134.6	131.7	130.9
7.943E+00	134.7	134.0	132.4	131.8	131.5	132.3	134.0	133.2	131.8	120.9	115.1	112.6	118.7	130.1	132.1	130.3	130.6
1.000E+01	133.5	133.4	132.8	132.4	132.5	133.8	132.2	131.9	131.1	118.9	112.8	113.7	118.1	129.2	130.1	129.4	130.8
ANGLE XI (DEG)	10.	20.	30.	40.	50.	60.	70.	80.	90.	100.	110.	120.	130.	140.	150.	160.	170.

SIDELINE DISTANCE = 6.486E+02 M.

PROGRAM TEE33CA
AIRCRAFT NOISE PREDICTION

DATE
76/04/22.
YR/MO/DA

CASE NO. 2

SHIELDING CHECKOUT TEST BPR=5, T.O. POWER(MKS UNITS)
JET(P + S),TURBINE,AFT FAN,JET EDGE INTERACTION COMPONENTS

TURBINE NOISE

W I N G S H I E L D I N G I N P U T S

1) EDGE SOLUTIONS CONSIDERED (1 = YES, 0 = NO)
TRAILING E. = 1, LEADING E. = 1, TIP E. = 1

3) EXHAUST FLOW MACH NO. = .460,STATIC TEMPERATURE RATIO = 2.550

4) CORRECTION FACTOR FOR ANGULAR SHIFT OF SOURCE

ALFA =	.450	.450	.500	.530	.590	.670	.720	.780
	.800	.720	.620	.550	.520	.540	.560	.570
	.610	.700	.790	.820	.800	.780	.750	.750
COT(PSIO) =	-4.000	-3.500	-3.000	-2.750	-2.500	-2.250	-2.000	-1.750
	-1.500	-1.250	-1.000	-.750	-.500	-.250	.250	.500
	.750	1.000	1.250	1.500	1.750	2.000	2.500	3.000

5) ANGLE OFFSET FOR ANGULAR SHIFT OF SOURCE, GAMA = 13.000

6) RADIAL OFFSET OF APPARENT SOURCE

BETA =	.950	.950	1.000	1.070	1.170	1.200	1.170	1.040
	.870	.600	.320	.260	.460	.730	1.270	1.470
	1.550	1.470	1.350	1.240	1.160	1.090	1.000	1.000
COT(PSIO) =	-4.000	-3.500	-3.000	-2.750	-2.500	-2.250	-2.000	-1.750
	-1.500	-1.250	-1.000	-.750	-.500	-.250	.250	.500
	.750	1.000	1.250	1.500	1.750	2.000	2.500	3.000

PROGRAM TEE33CA
AIRCRAFT NOISE PRECICTION

DATE
76/04/22.
YR/MO/DA

CASE NO. 2

SHIELDING CHECKOUT TEST BPR=5, T.O. POWER(MKS UNITS)
JET(P + S),TURBINE,AFT FAN,JET EDGE INTERACTION COMPONENTS
TURBINE NOISE
INDEX, FREE-FIELD SPECTRA (R = 1 M)

SOUND PRESSURE LEVELS
(DB RE. 20 MICRO-N/SQ.M.)

FREQUENCY (KHZ)																	
5.012E-02	96.0	96.8	97.5	99.1	100.4	101.2	101.6	101.8	103.2	104.1	104.2	102.7	100.2	98.0	95.6	93.6	93.0
6.310E-02	96.2	97.2	97.9	99.4	100.8	101.7	102.2	102.4	103.8	104.7	104.8	103.4	100.9	98.8	96.4	94.6	94.1
7.943E-02	96.5	97.5	98.2	99.8	101.2	102.2	102.7	102.9	104.3	105.2	105.3	104.0	101.6	99.5	97.3	95.5	95.1
1.000E-01	96.8	97.9	98.5	100.1	101.6	102.7	103.3	103.4	104.9	105.7	105.8	104.6	102.3	100.3	98.1	96.4	96.1
1.259E-01	97.1	98.2	98.9	100.5	102.0	103.3	103.8	103.9	105.3	106.1	106.2	105.1	103.0	101.0	98.9	97.2	97.1
1.585E-01	97.4	98.6	99.2	100.9	102.4	103.8	104.4	104.4	105.8	106.4	106.6	105.6	103.6	101.8	99.7	98.1	98.1
1.995E-01	97.6	99.0	99.6	101.3	102.9	104.3	104.9	104.9	106.1	106.7	106.8	106.0	104.3	102.6	100.5	98.8	99.1
2.512E-01	98.0	99.5	100.0	101.9	103.5	105.0	105.6	105.4	106.5	107.1	107.2	106.3	104.9	103.4	101.3	99.6	99.9
3.162E-01	98.3	99.9	100.5	102.4	104.0	105.6	106.1	105.8	106.9	107.5	107.6	106.7	105.5	104.2	101.9	100.0	100.5
3.981E-01	98.6	100.4	100.9	102.9	104.6	106.2	106.6	106.3	107.5	107.9	107.9	107.2	105.9	104.9	102.4	100.1	100.7
5.012E-01	98.9	100.9	101.4	103.5	105.2	106.8	107.1	106.9	107.9	108.0	108.0	107.6	106.5	105.7	102.8	99.8	100.4
6.310E-01	99.1	101.3	101.9	104.1	105.8	107.4	107.7	107.6	108.2	108.3	108.1	107.9	107.2	106.4	102.9	98.7	100.0
7.943E-01	99.2	101.9	102.6	104.8	106.4	108.1	108.5	108.2	108.9	108.6	108.3	108.3	108.1	107.2	103.2	97.9	100.2
1.000E+00	99.2	102.3	103.1	105.4	107.0	108.7	109.2	109.0	109.3	108.7	108.3	108.6	108.8	108.0	104.1	99.8	101.6
1.259E+00	99.3	102.8	103.7	106.1	107.7	109.4	110.0	109.8	109.9	108.9	108.3	108.9	109.7	108.8	106.0	103.5	104.1
1.585E+00	99.5	103.4	104.3	106.8	108.4	110.2	110.9	110.7	110.5	108.9	108.2	109.1	110.7	109.7	108.1	105.6	106.3
1.995E+00	100.2	104.0	105.0	107.6	109.2	111.0	111.9	111.7	111.0	108.9	108.0	109.3	111.8	110.8	109.0	105.9	105.9
2.512E+00	101.7	104.6	105.8	108.4	110.0	111.9	112.9	112.7	111.6	108.8	107.7	109.5	113.0	111.9	108.3	107.0	105.2
3.162E+00	103.6	105.5	106.6	109.4	111.0	112.9	114.1	113.9	112.2	108.8	107.6	109.8	114.4	113.2	110.2	108.7	108.9
3.981E+00	105.0	106.9	107.7	110.7	112.4	114.3	115.6	115.4	113.0	109.2	107.9	110.0	116.1	114.6	112.3	106.9	110.3
5.012E+00	105.3	108.4	108.6	111.8	113.4	115.5	117.0	116.7	113.9	109.7	108.0	111.3	118.4	116.0	113.3	111.2	110.1
6.310E+00	106.3	110.1	110.1	113.4	115.1	117.2	119.5	119.1	115.7	111.2	108.6	108.8	117.2	114.2	111.5	108.0	107.8
7.943E+00	108.4	112.1	112.1	115.7	117.1	118.8	119.4	118.2	114.0	107.7	105.1	106.9	116.6	113.3	110.3	107.7	108.0
1.000E+01	108.8	112.3	112.0	114.9	116.0	117.8	119.2	118.0	113.1	106.3	104.1	106.1	116.7	113.0	109.7	107.9	108.8

ANGLES (DEG)																	
PSI	10.0	20.0	30.0	40.0	50.0	60.0	70.0	80.0	90.0	100.0	110.0	120.0	130.0	140.0	150.0	160.0	170.0
BETA	25.2	25.2	25.2	25.2	25.2	25.2	25.2	25.2	25.2	25.2	25.2	25.2	25.2	25.2	25.2	25.2	25.2
XI	10.0	20.0	30.0	40.0	50.0	60.0	70.0	80.0	90.0	100.0	110.0	120.0	130.0	140.0	150.0	160.0	170.0
DELTA	0.0																

SIDELINE DISTANCE = 6.486E+02 M.

PROGRAM TEF330A
AIRCRAFT NOISE PREDICTION

DATE
76/04/22.
YR/MO/DA

CASE NO. 2

SHIELDING CHECKOUT TEST BPR=5, T.O. POWER(MKS UNITS)
JET(P + S),TURBINE,AFT FAN,JET EDGE INTERACTION COMPONENTS
TURBINE NOISE
PREDICTED CONFIGURATION CORRECTIONS

SOUND PRESSURE LEVEL ATTENUATION (DB)

FREQUENCY (KHZ)																	
5.012E-02	-16.0	-13.1	-10.2	-8.3	-6.2	-3.8	-1.9	.2	1.4	1.9	2.6	1.9	.1	-1.7	-4.3	-7.3	-11.7
6.310E-02	-15.3	-12.4	-9.6	-7.6	-5.6	-3.3	-1.5	.6	1.8	2.3	3.0	2.3	.4	-1.5	-4.2	-7.2	-11.8
7.943E-02	-14.5	-11.8	-8.9	-7.0	-5.0	-2.8	-1.0	1.1	2.3	2.8	3.5	2.7	.8	-1.2	-4.0	-7.1	-11.8
1.000E-01	-13.8	-11.2	-8.2	-6.4	-4.4	-2.3	-.6	1.5	2.8	3.3	4.0	3.1	1.1	-1.0	-3.8	-7.0	-11.8
1.259E-01	-13.1	-10.5	-7.6	-5.7	-3.8	-1.8	-.1	2.0	3.3	3.9	4.6	3.5	1.4	-.7	-3.7	-6.9	-11.8
1.585E-01	-12.4	-9.9	-6.9	-5.1	-3.3	-1.3	.3	2.5	3.9	4.6	5.2	4.1	1.7	-.5	-3.5	-6.7	-11.8
1.995E-01	-11.6	-9.3	-6.3	-4.6	-2.8	-.9	.8	3.1	4.5	5.3	6.0	4.7	2.1	-.3	-3.2	-6.5	-11.7
2.512E-01	-10.9	-8.7	-5.6	-4.0	-2.2	-.4	1.3	3.7	5.2	6.0	6.7	5.4	2.5	-.0	-2.9	-6.1	-11.5
3.162E-01	-10.2	-8.1	-5.0	-3.5	-1.8	-.0	1.7	4.3	5.8	6.6	7.3	6.1	3.0	.2	-2.6	-5.6	-11.0
3.981E-01	-9.5	-7.6	-4.5	-3.1	-1.4	.4	2.2	4.8	6.2	7.2	8.0	6.6	3.5	.5	-2.0	-4.7	-10.2
5.012E-01	-8.8	-7.1	-4.0	-2.6	-.9	.7	2.7	5.1	6.8	8.1	8.9	7.2	4.0	.7	-1.4	-3.3	-9.0
6.310E-01	-8.0	-6.5	-3.5	-2.2	-.5	1.1	3.1	5.5	7.5	8.8	9.8	7.9	4.3	1.0	-.5	-1.3	-7.5
7.943E-01	-7.1	-6.0	-3.1	-1.8	-.1	1.5	3.4	5.9	7.9	9.7	10.7	8.6	4.5	1.3	.3	.6	-6.7
1.000E+00	-6.0	-5.4	-2.6	-1.4	.3	2.0	3.7	6.2	8.5	10.5	11.7	9.3	4.8	1.5	.4	-.3	-7.0
1.259E+00	-5.0	-4.8	-2.1	-1.0	.7	2.4	4.0	6.5	9.0	11.4	12.8	10.1	4.9	1.8	-.4	-2.8	-8.5
1.585E+00	-4.1	-4.3	-1.6	-.6	1.1	2.7	4.2	6.7	9.6	12.5	14.0	10.9	5.0	2.0	-1.4	-4.0	-9.6
1.995E+00	-3.7	-3.8	-1.2	-.3	1.4	2.9	4.4	6.8	10.1	13.6	15.4	11.8	5.0	2.0	-1.2	-3.1	-8.1
2.512E+00	-4.1	-3.3	-.9	-.1	1.7	3.2	4.5	6.8	10.7	14.8	16.7	12.8	5.0	2.0	.6	-3.0	-6.3
3.162E+00	-4.8	-3.0	-.5	.2	1.9	3.3	4.4	6.8	11.2	16.0	18.0	13.7	4.8	1.9	-.1	-3.6	-8.8
3.981E+00	-4.8	-3.0	-.2	.3	2.0	3.4	4.3	6.8	11.8	17.0	19.1	14.8	4.5	1.9	-.8	-.4	-8.8
5.012E+00	-3.9	-3.2	.1	.4	2.1	3.4	4.1	6.7	12.1	17.7	20.3	16.0	4.2	2.2	-.4	-3.4	-7.5
6.310E+00	-3.3	-3.4	.2	.4	2.0	3.2	3.8	6.6	12.7	18.2	21.5	17.0	3.8	2.4	-.3	-2.0	-6.9
7.943E+00	-3.5	-3.3	.3	.3	1.9	3.0	3.4	6.2	12.4	19.4	22.3	17.7	3.3	2.2	-.2	-2.7	-8.2
1.000E+01	-3.4	-3.4	.1	.2	1.8	2.8	3.0	5.7	12.6	20.1	22.5	18.3	2.8	1.9	-.1	-3.5	-9.6

ANGLES (DEG)																	
PSI	10.0	20.0	30.0	40.0	50.0	60.0	70.0	80.0	90.0	100.0	110.0	120.0	130.0	140.0	150.0	160.0	170.0
XI	10.0	20.0	30.0	40.0	50.0	60.0	70.0	80.0	90.0	100.0	110.0	120.0	130.0	140.0	150.0	160.0	170.0
DELTA	0.0					SIDELINE DISTANCE =			6.486E+02 M.								

6.0 MACHINE REQUIREMENTS

This program is designed to operate on a CDC6600 scientific computer. Approximately 141.1K octal words of storage are required for operation. Data input is thorugh cards, tape or disk card image. Output is to a line printer. In addition to the standard input/output disk files TAPE5/TAPE6, the following disk files are used as scratch storage (primarily report files) TAPE8, 9, 10, 11, 12, 13, and 20. TAPE20 is the only scratch file that the user may need to concern himself with. This file is used for output of acoustic data for noise contour estimation (see NASA CR-114649, pp. 38, 39, 175 to 178 for further detail).

7.0 OPERATING SYSTEM

The program has been checked out on the CDC6600 using the FTN 4.5 compiler under the KRONOS 2.1 operating system. The program is written in FORTRAN IV language to be relatively machine independent. The majority of the FORTRAN code complies with ANSI standards, except for the use of NAMELIST and OVERLAY features designed into the program for economical and easy use.

8.0 RESOURCE ESTIMATES

The central processor unit (CPU) time required to process a job depends upon the program options used. The major factors influencing the time per case are:

1. The number of configurations and the number of noise components in each configuration

2. 1/1 or 1/3 octave bands for predicted noise spectra (the 1/3 octave band option uses approximately twice as much CP time)

3. The number of sideline observer positions

4. The number of noise components for which shielding is included, and the number of wing edges

5. Lining attenuation and configuration corrections

6. Optional output reports

The execution time in CPU seconds per case is given approximately by

$$N1\ N2\ (C1 + C2\ N3 + N4(C3\ N3 + C4))$$

where

N1 = number of noise components

N2 = number of observer sideline positions

N3 = number of wing edges

N4 = number of frequency bands

(C1, C2, C3, C4) = (1.0, 0.3, 0.02, 0.04)

This formula is based on computer runs with all print options on the shielding included for each noise component (for jet noise shielding assume N3 = 3, for jet edge N3 = 0). For lining attenuation and configuration corrections, add approximately 10% to the execution time.

9.0 DIAGNOSTICS

The following is a list of the diagnostic messages which are printed when various error conditions are detected by the program.

1. TOO MANY ENTRIES IN ALTITUDE VS TEMPERATURE TABLE.

2. TOO MANY ENTRIES IN ALTITUDE VS PRESSURE TABLE. MAXIMUM ALLOWED IS FIFTY. ISA ATMOSPHERE IS ASSUMED.

3. TOO MANY ENTRIES IN ALTITUDE VS RELATIE HUMIDITY TABLE. MAXIMUM ALLOWED IS FIFTY. ISA ATMOSPHERE IS ASSUMED.

4. ALTITUDE VS TEMPERATURE TABLE IS UNDEFINED. MUST HAVE AT LEAST TWO ENTRIES. ISA ATMOSPHERE IS ASSUMED.

5. ALTITUDE VS PRESSURE TABLE IS UNDEFINED. MUST HAVE AT LEAST TWO ENTRIES. ISA ATMOSPHERE IS ASSUMED.

6. ALTITUDE VS RELATIVE HUMIDITY TABLE IS UNDEFINED. MUST HAVE AT LEAST TWO ENTRIES. ISA ATMOSPHERE IS ASSUMED.

7. EFFECTIVE TIP MACH NUMBER OUT OF RANGE (GT 0.93 OR LT 0.) OR BAD INPUTS.

8. TOO MANY TARGET FREQUENCIES SPECIFIED FOR LINING. ONLY FIRST TEN ARE USED.

9. TOO MANY WALLS SPECIFIED IN FAN LINING. ONLY FIRST TEN ARE USED.

10. NO WALLS HAVE BEEN DEFINED FOR FAN LINING.

11. ERROR WRITING RANDOM FILE JOB ABORT.

12. ERROR READING RANDOM FILE JOB ABORT.

13. ***FATAL ERROR***BAD GEOMETRY.

14. DO CORE SEPARATE FROM TURBINE WHEN SHIELDING INCL USED TURBINE ASSUMED.

10.0 CONTROL CARDS

A computer magnetic tape (with a backup tape) is furnished for the complete NAS2-6969 contract software revised in accordance with the requirements of contract DOT-FA74WA-3497. The tape contains the files listed in the sequence below created by the text program editor UPDATE:

SOURCE . . .File of source deck for regeneration of NEWPL and COMPILE files

NEWPL . . .New program library file

COMPILE . . .Card image file for compilation using the FTN 4.5 compiler

Any of these files on the tape can be used to create a file of relocatable binaries to be executed on the CDC6600 computer.

The software on the tape actually corresponds to three independent programs; i.e.,

1. A community noise source estimation program revised to include airframe shielding attenuation estimation capability

2. A postprocessor program to interface the output of item 1 with a noise contour estimation program

3. A noise contour estimation program

The first program is the only one which was significantly modified for the DOT/FAA contract. The other two programs are just CDC6600 versions of the original IBM360 computer versions delivered to NASA-Ames in July of 1973. Use of the last two programs follows that described in NASA reports CR114649 and CR114650 except for the following:

4. The $ notation for NAMELIST input on the CDC6600 computer replaces the & notation used for the IBM360 computer.

5. The control cards are radically different for the CDC6600 computer for *all* the programs mentioned above.

There are many ways to get the software code off of the tape(s) provided. We propose the following methods which result in economical and easy use for a large number of user's. It is assumed that the CDC6600 computer system has indirect-access permanent file disk storage capability. The storage space required for all the programs is about 800 sectors (50K words or 3M bits).

The control cards sequences used below are unique to the Boeing Enhanced KRONOS 2.1 computer system, but these can be used at other CDC6600 computer installations

with minor modifications. These control card sequences require certain information to be provided by the user as indicated in table A-2.

The first step that must be accomplished is to get the programs off of the tape, compiled, and retained on disk storage as relocatable binary programs. The control card sequence listed in table A-3 instructs the computer to perform this task. Details involved are noted in the table in the description column.

Once the relocatable binary programs are retained on disk, the control card sequences given in tables A-4, A-5, and A-6 can be used to load and execute the programs. Table A-4 applies for the noise source estimation program. Table A-5 applies for the postprocessor program to interface acoustic data output of a previous noise source estimation job with the noise contour estimation program. Table A-6 applies for the use of the noise contour estimation program.

Table A-2.—User Supplied Information

Abbreviation		Definition
Jobn	...	Unique job name
yy	...	Job priority selected by user
Userno	...	User's account number
Password	...	User's password
Name, etc	...	User's name/telephone number/mail stop/ organization number
xx-xx	...	User's mail stop
xxxx	...	Tape identification number for source program library tape
xxx	...	Central processor time estimate in seconds
zzz	...	Estimate of the maximum number of cards punched. Usually this is less than 500 cards per job step.
pfn1	...	Permanent file name for Noise Source Estimation (NSE) overlay program binaries
pfn2	...	Permanent file name for Post-Processor (PP) program binaries
pfn3	...	Permanent file name for Noise Contour Estimation (NCE) main program binary
pfn4	...	Permanent file name for Alternate LIBrary (ALIB) containing subroutine binaries used by NSE and NCE programs
pfn5	...	Permanent file name to save computed noise contour data for subsequent run to produce plots
-- eor --	...	End of record card; i.e., a card having a multiple 789 punch in column one with any informative alphanumeric characters punched on the rest of the card.
-- eoi --	...	End of information card; i.e., a card having a multiple 6789 punch in column one with any informative alphanumeric characters punched on the rest of the card.

Table A-3.—Computer Job to Save Relocatable Binaries on Disk From Program Library Tape

Control Cards	Description
Jobn,CM120000,T200,Pyy.	Job card
ACCØUNT,Userno,Password. Name, etc.	Account card
RFL,20000.	
REQUEST,PL,VSN=66xxxx,F=I,LB=KU,PØ=AR.	Gets program library tape and assigns file name PL to the tape
REWIND,PL,INPUT.	
SKIPF,PL,1.	
CØPYNF,PL,ØLDPL,1.	Copies program library tape to ØLDPL file
RETURN,PL.	
CØPYSBF,INPUT,ØUTPUT.	Copies input deck to ØUTPUT file
REWIND,INPUT.	
SKIPR,INPUT,1.	
RFL,40000.	
UPDATE,Q,C.	Writes program "decks" on CØMPILE file
RFL,120000.	
FTN,I=CØMPILE,T,PL=77777B.	Compiles program to produce relocatable binaries on LGØ file
RFL,20000.	
REWIND,LGØ.	
CØPYBR,LGØ,A,15.	Copies NSE overlay programs to file A
CØPYBR,LGØ,B,2.	Copies PP program to file B
CØPYBR,LGØ,C,1.	Copies NCE main program to file C
CØPYBF,LGØ,D.	Copies subroutines for NSE and NCE programs to file D
REWIND,D.	
LIBGEN,F=D,P=ALIB,N=ALIB.	Generates an alternate library on file ALIB for loader from routines on file D
SAVE,A=pfn1/CT=S,M=R.	Saves files A, B, C, ALIB on disk for later use
SAVE,B=pfn2/CT=S,M=R.	
SAVE,C=pfn3/CT=S,M=R.	
SAVE,ALIB=pfn4/CT=S,M=R.	
-- eor --	
*CØMPILE PHBNAC.ZERO	Instructs UPDATE editor to write "decks" PHBNAC through ZERØ, to the CØMPILE file
-- eoi --	

Table A-4.—Computer Job to Execute Noise Source Estimation Program

Control Cards	Description
Jobn,CM141100,Txxx,Pyy.	Job card
ACCØUNT,Userno,Password. Name, etc.	Account card
RFL,20000.	
GET,NSE=pfn1/UN=Userno.	Gets NSE program off disk
GET,ALIB=pfn4/UN=Userno.	Gets alternate subroutine library off disk
ØFFLINE. PUNCH EST = zzz CARDS[a]	Need only if cards are to be punched
REWIND,INPUT.	
CØPYSBF,INPUT,ØUTPUT.	Writes input deck to ØUTPUT file
REWIND,INPUT.	
SKIPR,INPUT,1.	
RFL,141100.	
LØADXEQ,F=NSE,U=ALIB.	Loads and executes NSE program
RFL,20000.	
CØPYCF,TAPE20,PUNCH,1,1,80.	Need only if acoustic data is punched for noise contour estimation
. . .	
RFL,141100.	Repeat[b] these cards to execute NSE program for each additional job step; i.e., you have more than one data deck
EXEC.	
RFL,20000.	
CØPYCF,TAPE20,PUNCH,1,1,80.	
. . .	
-- eor --	
Data deck for 1st job step	
. . .	Repeat[b] the data decks for each additional job step
-- eor --	
Data decks for additional job steps	
. . .	
-- eoi --	

a) Cards punched are acoustic data (noise level, engine performance parameter, elevation angle, $\log_{10}$ of range at CPA) which characterize an airplane configuration. See NASA CR114649, pp. 38, 39 and 175-178. Format for punch data on the cards is (1PE12.3, 3E12.3).

b) Not needed if only one data deck is used.

Table A-5.—Computer Job to Execute Postprocessor Program

Control Cards	Description
Jobn,CM60000,T100,Pyy.	Job card
ACCØUNT,Userno,Password. Name, etc.	Account card
RFL,20000.	
GET,PP=pfn2/UN=Userno.	Gets post processor program off disk
ØFFLINE. PUNCH EST = zzz CARDS[a]	
REWIND,INPUT.	
CØPYSBF,INPUT,ØUTPUT.	Copies input deck to ØUTPUT file
REWIND,INPUT.	
SKIPR,INPUT,1.	
. . .	
RFL,33000.	Produces acoustic data subroutine to interface with NCE program, compiles the subroutine, and punches relocatable binary deck. Repeat[c] these cards for each additional job step to characterize more than one airplane configuration.
REWIND,TAPE20.	
CØPYCR,INPUT,TAPE20,1,1,80.	
PP.	
RFL,60000.	
FTN,I=TAPE22,T,B=PUNCHB.	
. . .	
-- eor --	
Data deck[b] for 1st job step	Data deck of acoustic data for NCE program
. . .	
-- eor --	Include[c] additional data decks for characterizing the noise of more than one airplane configuration.
Data decks[b] for additional job steps	
. . .	
-- eoi --	

a) Cards punched are binary acoustic data subroutines to be used by the noise contour estimation program.

b) Input data cards are acoustic data (noise level, engine performance parameter, elevation angle, $\log_{10}$ of range at CPA) which characterize an airplane configuration. See NASA CR114649, pp. 38, 39 and 175-178. Format for data on the cards is (1PE12.3, 3E12.3).

c) Not needed if only one data deck is used.

Table A-6.—Computer Job to Execute Noise Contour Estimation Program

Control Cards	Description
Jobn,CM70000,T200,Pyy.	Job card
ACCØUNT,Userno,Password. Name, etc.	Account card
RFL,20000.	
GET,C=pfn3/UN=Userno.	Gets NCE main program off disk.
GET,ALIB=pfn4/UN=Userno.	Gets alternate subroutine library off disk.
GET,TAPE2=pfn5/UN=Userno.	Gets[c] previously saved noise contour data off disk.
CØPYBR,C,NCE,1.	
CØPYBR,INPUT,NCE,1.	Includes acoustic data routine with NCE program.
CØPYSBF,INPUT,ØUTPUT.	Copies input data to ØUTPUT file.
REWIND,INPUT.	
SKIPR,INPUT,2.	
UNBLØCK,TAPE99.	
LØADXEQ,F=NCE,U=ALIB,CALCMPF.	Loads and executes NCE program using alternate libraries ALIB and CALCMPF.
REPLACE,TAPE2=pfn5.	Saves[c] noise contour data for later use.
PLØTFIL,CALCØMP,TAPE99,0.	Disposes plot file TAPE99 for offline CALCØMP plotting.
CØMMENT. PLAIN WHITE PAPER	
CØMMENT. BLACK WET INK	
CØMMENT. RIGHT EDGE START	
CØMMENT. MAIL TØ M/S xx-xx	
-- eor --	
Binary deck of acoustic data subroutine[a]	
-- eor --	
Input data cards[b] to describe flight paths, noise contours desired, and/or plotting options	
-- eoi --	

a) One of the routines produced by the post-processor program (Table 5).

b) See NASA CR114649, pp. 175-182 and NASA CR114650, pp. 66-108 for input data description. Note that a $ replaces the & notation given in the second reference for NAMELIST input.

c) Required only if computed results are being checked before making plots (see NASA CR114650, pp. 60 and 70 for discussion) with a second job submittal.

11.0 SOURCE LISTING

The source listing for the programs on magnetic tape is provided in volume III of this report.

APPENDIX B

PRELIMINARY TEST PLAN FOR ASSESSMENT OF FORWARD VELOCITY EFFECTS ON THE SHIELDING EFFECTIVENESS OF WING- AND BODY-TYPE ACOUSTIC BARRIERS

J. M. Campbell

1.0 SUMMARY

A test plan providing a logical follow-on to theory and analysis reported in volume I is presented. Tests executed in a wind tunnel using simple geometric shapes in a variety of configurations and for a range of tunnel flow velocities are recommended. The proposed matrix of configurations/tunnel flow velocities is aimed at isolating and assessing:

- Effect of engine exhaust flow on shielding
- Effect of ambient flow velocity on the intrinsic shielding processes
- Effect of wing wakes on wing shielding effectiveness

Special pulse test techniques and associated instrumentation are proposed to eliminate problems of background noise and reverberation which have typically dilluted the usefulness of previous small static chamber and wind tunnel data.

2.0 INTRODUCTION

The mathematical models developed during this contract for predicting shielding effects are based on data gathered from a variety of sources. These data were derived from small scale static tests and full scale static and flyby tests. In some cases, these tests were only peripherally directed toward shielding effects. The data in many cases are contaminated by acoustic energy reflected from the ground or other surfaces and noise sources additional to the shielded source. The reflection of energy from the ground plane or any other flat surface is not uniform at all frequencies. Phenomena such as wind, temperature, humidity, and their gradients can change the amplitude and frequency response of the reflection effects. All full scale data are subject to multiple source interference.

New data acquisition methods are needed. Data should be taken in a new way. Boeing Commercial Airplane Company, while improving its products, has developed and reduced to practice this needed new way. The test plan presented here makes full use of the most advanced techniques in acoustic measurement to obtain noise shielding data in a wind tunnel uncontaminated by reflections and stray noise sources.

3.0 TEST OBJECTIVES

The test program described herein is designed and sequenced to answer three general questions:

- What effect does airflow have on the "shielding" provided by aerodynamic lifting or control surfaces?
- For some specific geometries, the aircraft body provides "shielding." How is this affected by airflow?
- Does a wake provide significant "shielding" in a flow field?

The term "shielding" includes reflection, absorption, refraction, and diffraction in differing proportions depending on the situation. By programming the tests properly, these proportions can be revealed. Thus, the quality as well as the quantity of the "shielding" may be determined. While flight effects cannot be measured directly in a wind tunnel, this test program is a necessary step in interpreting measured flight data.

4.0 TEST APPROACH

The two principal problems of wind tunnel acoustic measurements are: high noise levels in the tunnel (see fig. B-1) and the hard walls of the tunnel provide reflecting surfaces which cause a reverberent level to build up. The solutions to these problems are interrelated so that the "best" solution for one is the "worst" for the other. Nevertheless, a viable compromise is available.

The effect we wish to measure is shielding. Shielding can be defined as excess sound attenuation between two points, excess in that the attenuation is more than that which is expected from inverse square losses and atmospheric absorption. Since attenuation is the measurement desired, the absolute magnitude is not an important parameter–only the change is.

The recommended test hardware arrangement in the wind tunnel is shown in figure B-2. A sound source is placed in position on one side of a shielding configuration, and a microphone is placed close to the source. This microphone is called the reference microphone. A second microphone, called the receiver microphone, is mounted at a position of interest. If the signal from the reference microphone is compared to the receiver signal, the change will represent the total attenuation between the two points.

If the signal from the sound source is pulsed, and the signals from the two microphones are examined before any significant energy is reflected from the wind tunnel walls, the data will be free from the effects of reverberation. Using the Boeing transonic wind

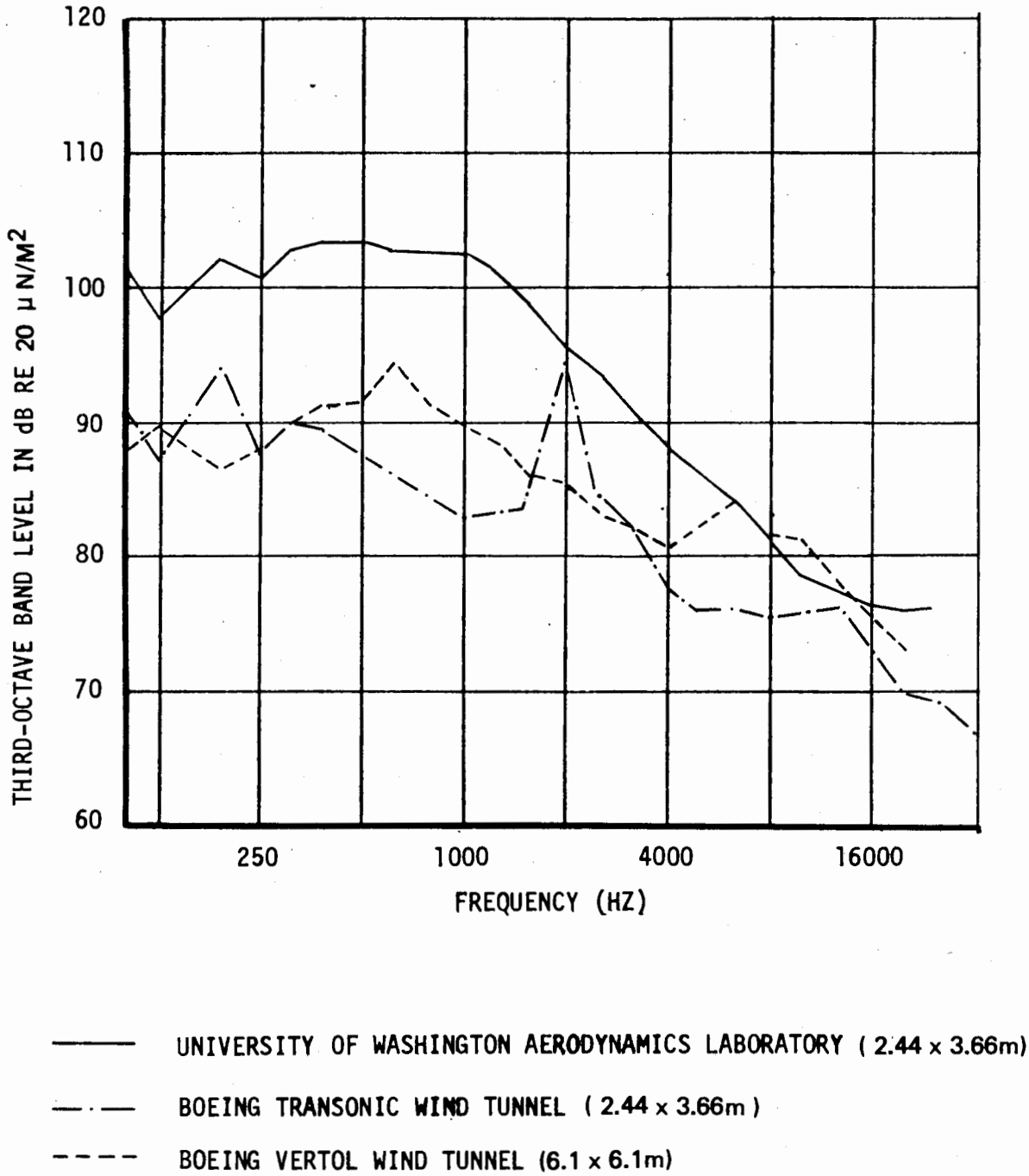

Figure B-1.—Tunnel Acoustic Survey Results (53 m/s)

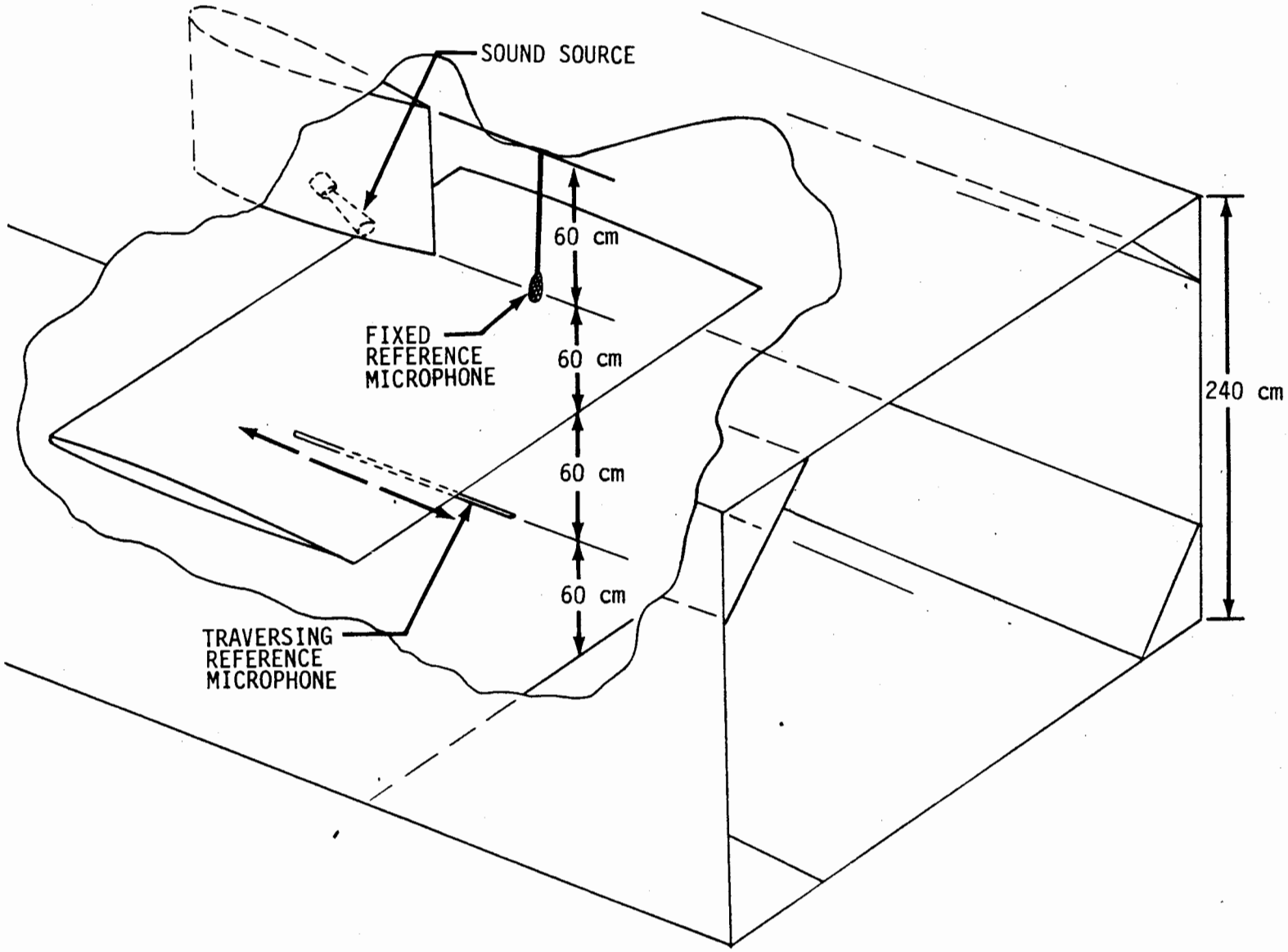

Figure B-2.—General Test Hardware Arrangement in Wind Tunnel

tunnel (BTWT) as an example, the source and reference microphone would be placed 0.60 m above the test article, while the receiver would be mounted 0.60 m below (fig. B-2).

The path length around the test article is 1.7 m. The transit time would be about 5 ms. The shortest reflection path would be about 1.2 m longer than the most direct path; therefore, the longest time available to examine the two signals is about 4 ms.

The effect of high noise levels in the wind tunnel (fig. B-1) would be alleviated by using a high intensity sound source which projects a single tone. The choice of the frequency of the tone is dependent on the wind tunnel used. Referring to figure B-1, the sound level in the BTWT in the 1/3 octave band centered about 16 kHz is 73 dB. Consider the sound source is set on this frequency and produces a level of 120 dB at 1 m. In traversing the 1.7-m path to the receiving microphone, the normal attenuation would be 5 dB, resulting in a level of 115 dB. We would expect shielding effects up to 40 dB; hence, the level of the signal at the receiving microphone would be as low as 75 dB, only 2 dB above the ambient. A solution to the poor signal-to-noise ratio is to limit the receiver bandwidth. Referring to the previous paragraph, we find that the longest reverberation free time is 4 ms. With this length of time, the narrowest bandwidth achievable is $1/(4 \times 10^{-3})$ or 250 Hz. Considering that the 1/3 octave band about the 16-kHz center frequency is about 3750 Hz wide, the ambient noise reduction would be $10 \log_{10}(3750/250)$ or -12 dB, giving us a signal-to-noise ratio of 14 dB. This would introduce a systematic error of only 0.3 dB for a shielding value of 40 dB. For shielding values of 34 dB or less, the error becomes less than 0.1 dB. If the source frequency is raised to a higher frequency, the percentage bandwidth reduction could be greater, but the atmospheric absorption also becomes greater, thus, cancelling the improvement.

5.0 TEST PROCEDURE

Each configuration will be tested in the wind tunnel for wind-off and three wind-on conditions. A configuration is defined as a particular combination of test article, sound source placement, and receiver placement. The neutral airfoil qualifies as the most tested article (table B-1). It will be used to establish the basic wind-off/wind-on parametes for both leading- and trailing-edge shielding. It is also used to gain frequency dependent data. The wing is to be tested not only by itself, but also in combination with simulated engine flow. The round nozzle and the D-shaped nozzle will be tested alone and with the wing. The sound source will be placed inside the nozzle for these tests. A cylinder will be tested alone to simulate a fuselage. In addition to tests with a test article in the tunnel, a series of ambient noise tests will be made and an additional series with the sound source activated. In total, 495 configurations will be tested. This corresponds to 1980 data points.

Table B-1.—Test Matrix

TEST ARTICLE	TEST ARTICLE POSITIONS	SOUND SOURCE POSITIONS	SOUND SOURCE FREQUENCIES	RECEIVER POSITIONS	NOZZLE FLOW CONDITIONS	NOZZLE POSITIONS	SUBTOTAL CONFIG.	SUBTOTAL HARDWARE SETUPS
NEUTRAL AIRFOIL	2	3	2	15	NA	NA	180	18
WING	1	3	1	15	NA	NA	45	9
ROUND NOZZLE	1	1	1	15	1	1	15	3
"D" NOZZLE	1	1	1	15	1	1	15	3
ROUND NOZZLE BELOW WING	1	1	1	15	1	2	30	3
ROUND NOZZLE ABOVE WING	1	1	1	15	1	2	30	3
"D" NOZZLE	1	1	1	15	1	2	30	3
CYLINDER	1	3	1	15	1	NA	45	9
NONE	NA	3	2	15	NA	NA	90	9
AMBIENT MEASUREMENT	NA	NA	NA	15	NA	NA	15	3
TOTAL							495	63

6.0 TEST CONFIGURATIONS

It is planned to test in the wind tunnel eight configurations:

1. A thin neutral airfoil
2. A wing section
3. A round convergent nozzle
4. A D-shaped nozzle
5. A round convergent nozzle below a wing section
6. A round convergent nozzle above a wing section (unattached flow)
7. A D-shaped nozzle above a wing section (attached flow)
8. A cylinder

Sketches of these configurations will be found in figure B-3.

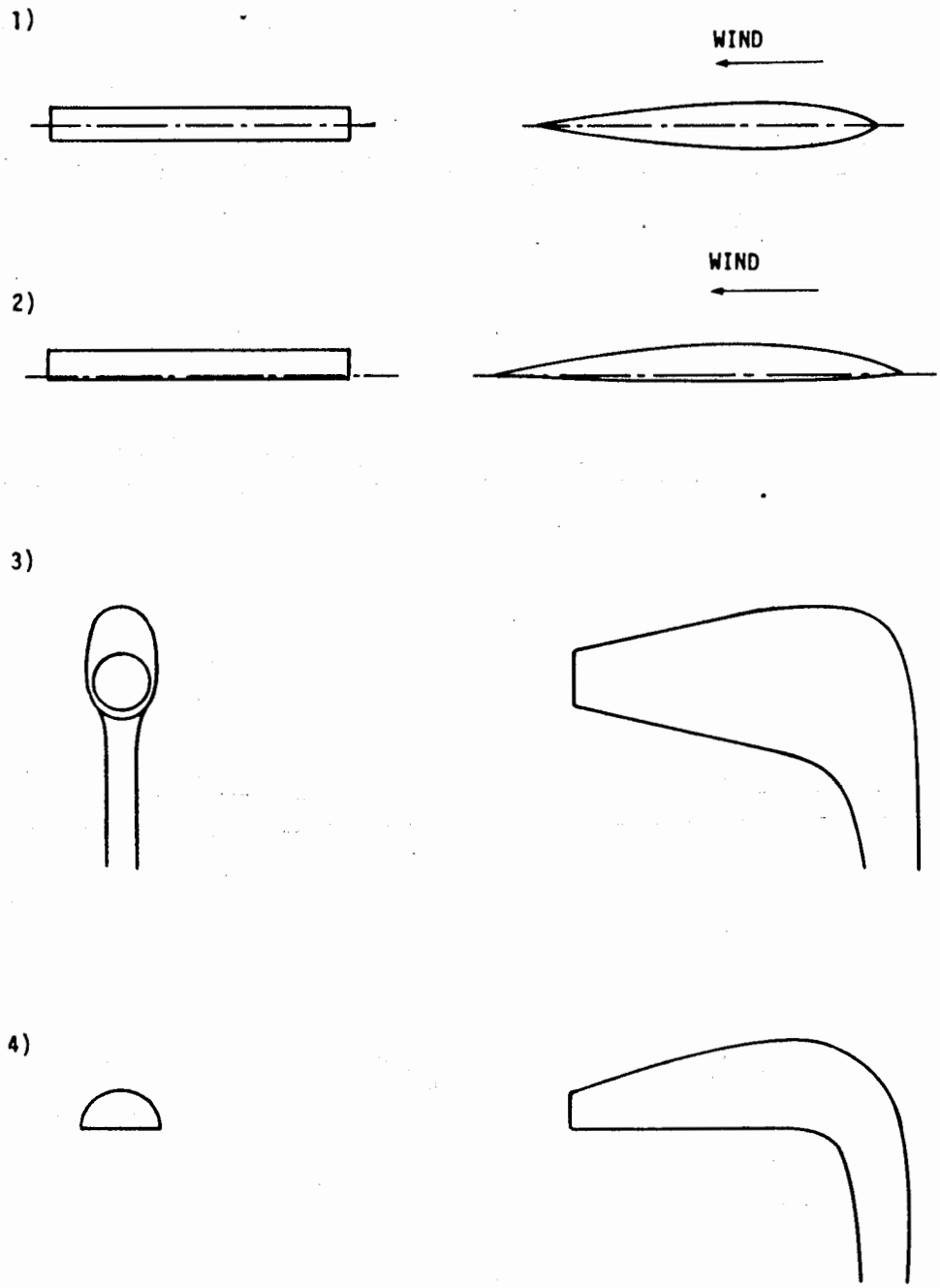

Figure B-3.—Configuration Schematics

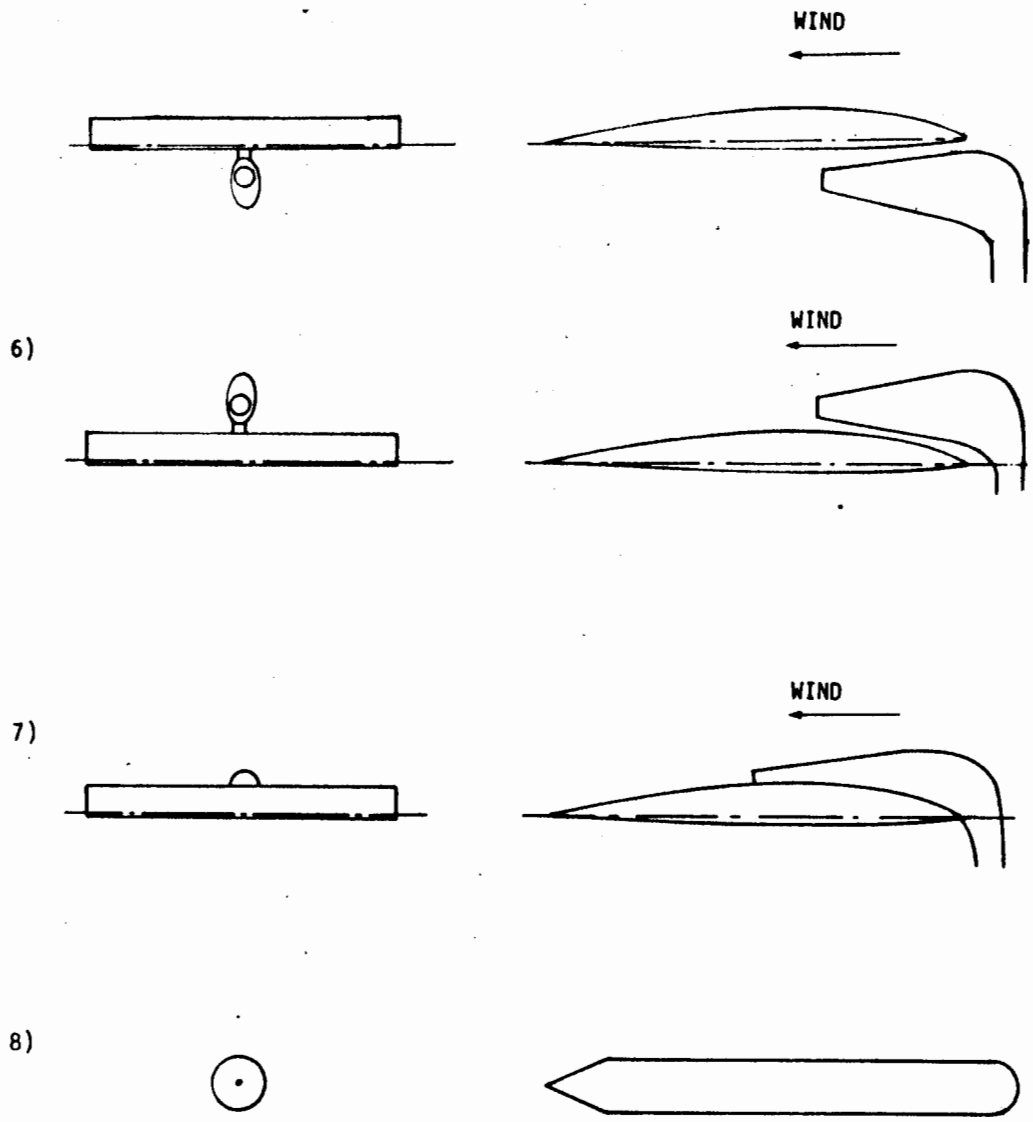

Figure B-3.—(Concluded)

7.0 ACOUSTIC INSTRUMENTATION AND DATA REDUCTION

The acoustic equipment consists of two groupings (fig. B-4). One grouping is located in or adjacent to the wind tunnel; the second grouping is located in building 2-80 at The Boeing Company Plant II complex. Collectively, the second set of equipment is called the Acoustic Data Processing Facility (ADP-1). The first set of instrumentation consists of the sound source (including its modulator), the two microphones, the signal-conditioning equipment, and monitoring equipment. The ADP-1 is an on-line real-time data acquisition and reduction system. The heart of the ADP-1 is the minicomputer manufactured by Prime, Inc. This computer is a multilingual time-sharing system. It has a basic memory of 64,000 words, and the memory can be expanded to 256,000 words in the future. The block diagram in figure B-5 indicates the capabilities of the system. For these tests only, a portion of this capability will be employed.

The equipment would be used in the following way. Upon command of the operator, the ADP-1 will provide a 10-ms pulse to the sound source modulator (fig. B-4). This causes the sound source to generate a tone burst at a selected frequency. The reference microphone is placed so as to pick up the acoustic signal almost immediately. The receiver microphone captures the signal at some later time. Both signals are digitized and are processed through a "digital filter." The amplitude of each pulse as well as the ratio between them is determined and recorded. As soon as this process is complete, ADP-1 issues another pulse and the same process is executed. Upon completion of 30 cycles of this data gathering, ADP-1 calculates the mean and standard deviation of the reference signal, the receiver signal, and the ratio of the individual pulses.

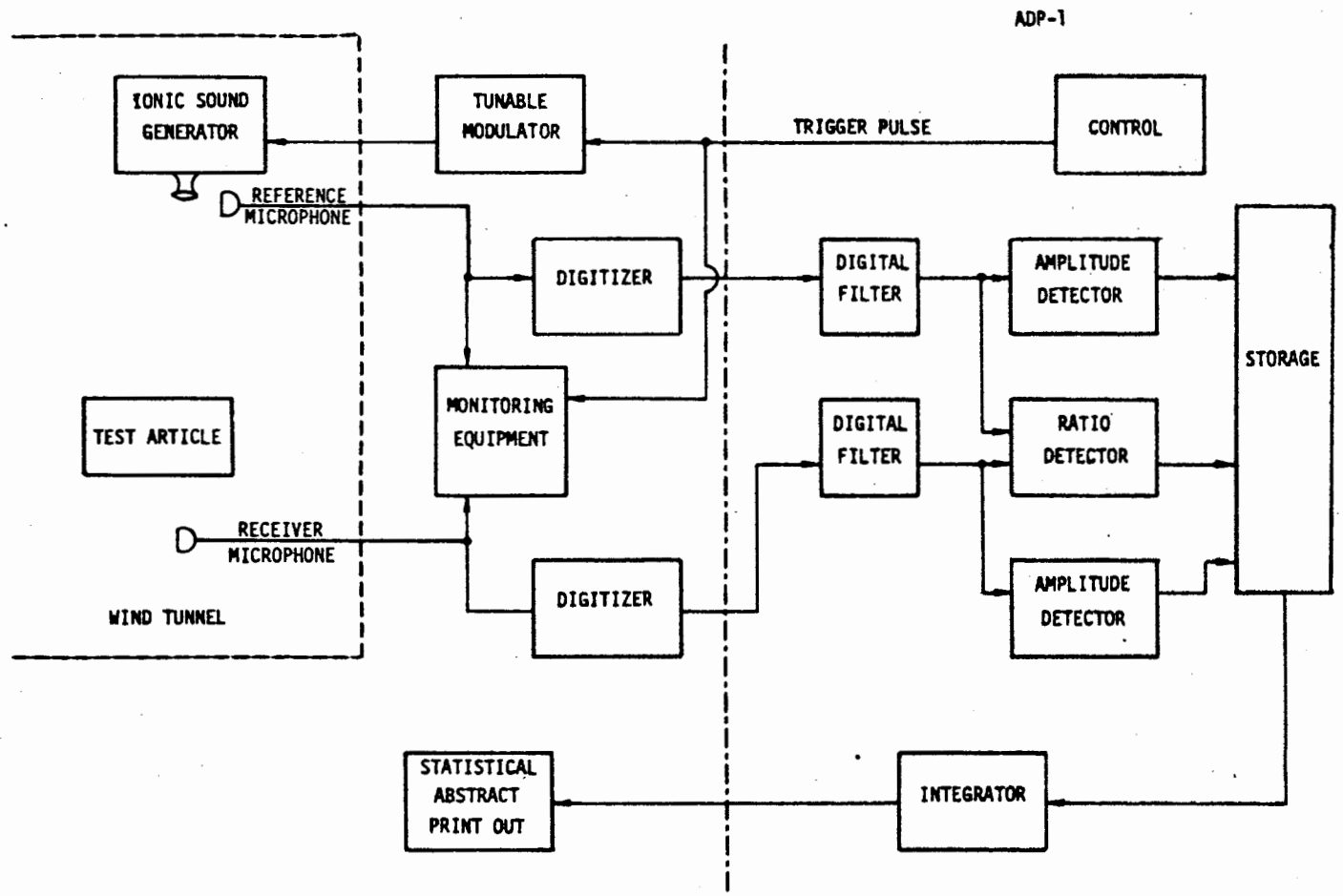

Figure B-4.—Acoustic Test Instrumentation and Data Reduction

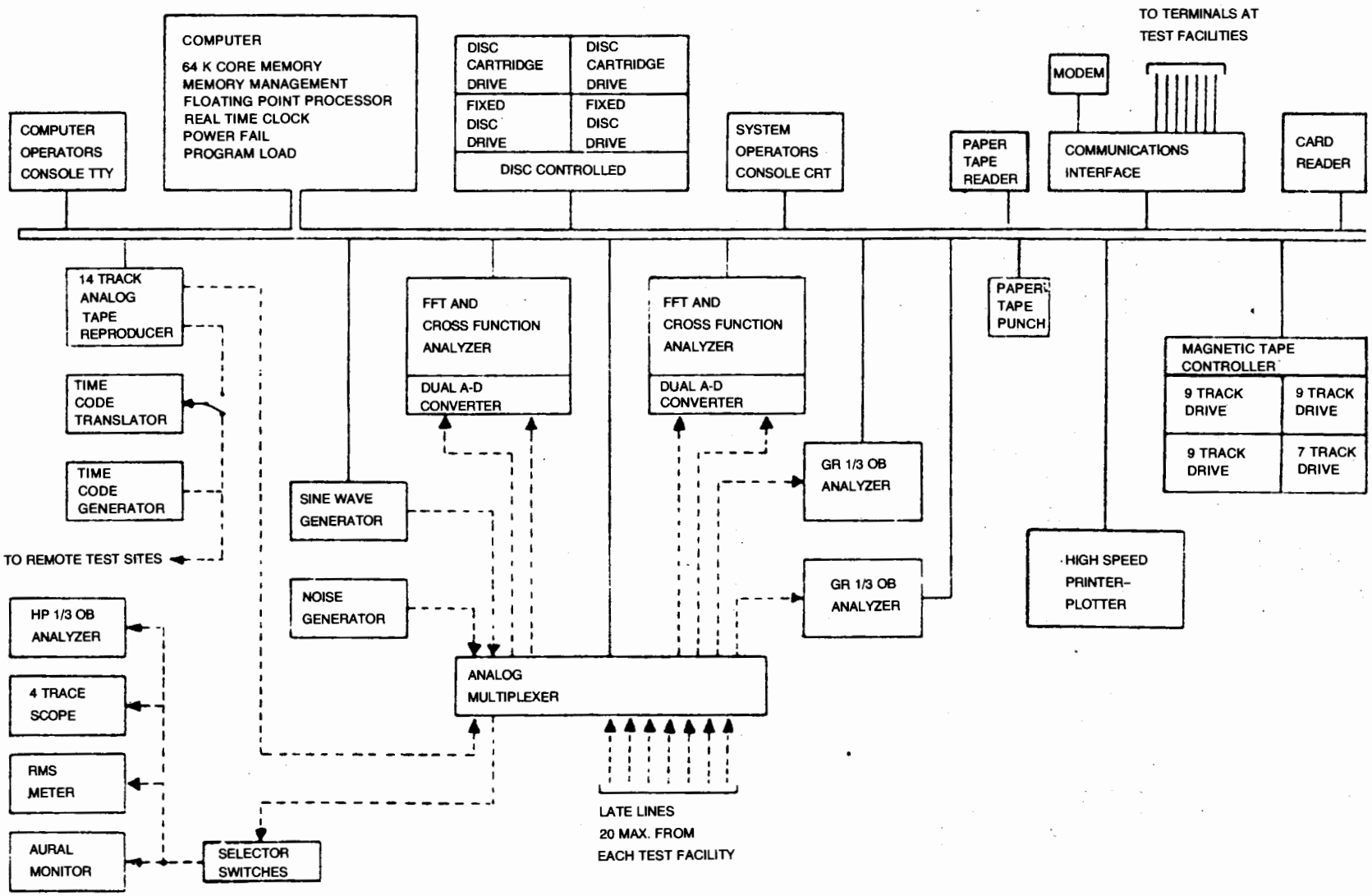

Figure B-5.—Schematic of Acoustic Data Processing System (ADP-1)

8.0 DATA ANALYSIS

The data output will consist of the mean and standard deviation of the reference and receiver microphones output and the mean and standard deviation of the ratio of the individual pulse pairs. By computing the ratio of the means of the reference and receiver signals and comparing this with the mean of the ratio, it is possible to determine the stationarity of the process. The delay time between the two signals will show the path length and also the normal attenuation. This information can be used to examine refraction effects. The standard deviation of the reference, as compared to that of the receiver, gives an additional measure of the randomness of the process. The target of the analysis is comparison between the data and the mathematical models developed in this contract. Thus, the mean of the ratio will be plotted against the significant variables such as, tunnel wind speed, angle of source relative to trailing edge, angle of receiver relative to trailing edge, wake intensity and thickness, etc.

9.0 SCHEDULE AND COST ESTIMATE

A schedule and manpower estimate for this proposed program is presented in table B-2.

Table B-2.—Schedule and Cost Estimates

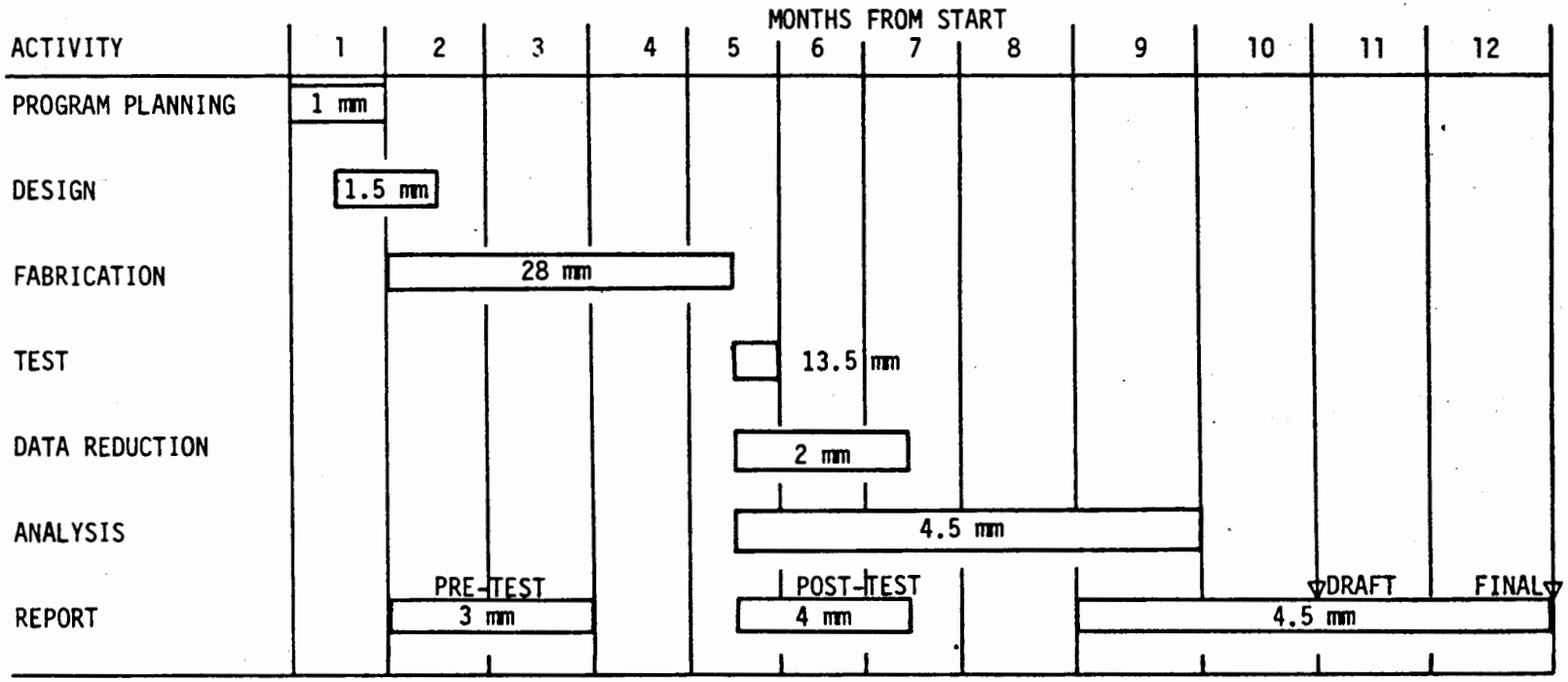

MM = MAN MONTHS

TOTAL: 62 mm

APPENDIX C
UNIFORM FLOW EFFECTS ON HALF-PLANE DIFFRACTION

D. G. Dunn

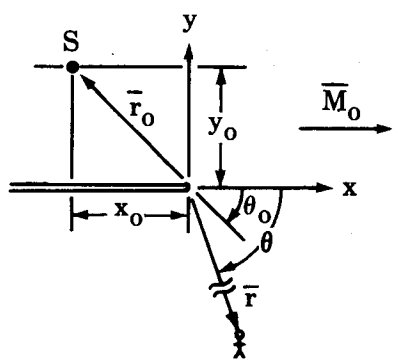

$\bar{r}_o = (-r_o \cos\theta_o,\ r_o \sin\theta_o,\ 0)$

$= (-x_o,\ y_o,\ 0)$

$\bar{r} = (r\cos\theta,\ -r\sin\theta,\ 0)$

$\bar{K} = (K\cos\theta,\ -K\sin\theta,\ 0)$

$\bar{M}_o$ Parallel to half-plane and perpendicular to edge

Consider the case illustrated in this sketch without flow where sound from a source, S, is incident upon a semi-infinite half-plane. The incident field for an omnidirectional compact source is given by:

$$\phi_i = \exp[i\,\bar{K}\cdot(\bar{r}-\bar{r}_o)]/[\bar{K}\cdot(\bar{r}-\bar{r}_o)]$$
$$= A(K\,r)\exp[i\,K\,r_o\cos(\theta-\theta_o)] \tag{C-1}$$

where $$A(K\,r) = \exp(i\,K\,r)/\left\{(K\,r)\left[1+\left(\frac{r_o}{r}\right)\cos(\theta-\theta_o)\right]\right\}$$

$$= \exp(i\,K\,r)/(K\,r) \quad \text{in the far-field}$$

It can be shown by the application of the reciprocity theorem illustrated in figure C-1 to the half-plane that the Green's function in the far field is equivalent to the problem of a plane-wave incident upon the half-plane and the determination of the field close to the barrier. This latter problem has been solved by Sommerfelt.[1] Since we are interested in a solution in the far-field relative to free-field radiation, the reciprocity theorem permits us to drop the A(Kr) factor and consider the radiation field as a plane-wave problem; i.e.,

$$\phi_i = \exp[i\,K\,r_o\cos(\theta-\theta_o)] \tag{C-2}$$
$$= \exp[i\,K\,(-x_o\cos\theta + y_o\sin\theta)]$$

---

[1]A. Sommerfelt, "Optics, Lectures on Theoretical Physics," Vol. IV, Academic Press, Inc., 1954.

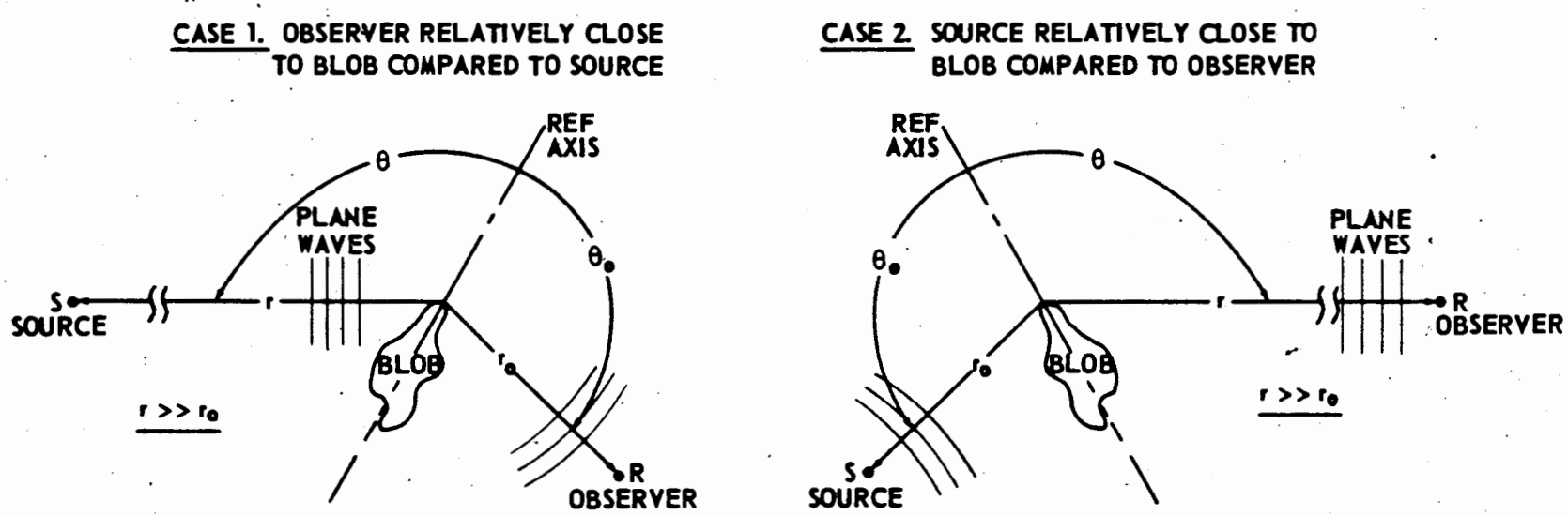

ASSERTION: ϕ_T/ϕ_i IS THE SAME FOR BOTH CASES 1 AND 2, WHERE ϕ_T REPRESENTS THE OBSERVED FIELD WITH THE BLOB AND ϕ_i REPRESENTS THAT WITHOUT THE BLOB.

APPLICATION: THE FAR-FIELD, POINT SOURCE SOLUTION FOR CASE 2 MAY BE OBTAINED DIRECTLY FROM THE NEAR-FIELD, PLANE-WAVE SOURCE SOLUTION OF CASE 1.

Figure C-1.—Illustration of Reciprocity Theorem as Related to Diffraction Problems

The total field being sought is

$$\phi_t = \phi_i + \phi \tag{C-3}$$

where ϕ is the diffracted or scattered field.

The boundary condition that impacts the total radiated field is

$$\frac{\partial \phi_t}{\partial y} = 0 \text{ for } y = 0,\ x < 0 \tag{C-4}$$

The scattered field ϕ must satisfy the wave equation

$$\nabla^2 \phi + K^2 \phi = 0 \tag{C-5}$$

As noted, this problem has been solved previously. The solution is

$$\begin{aligned} \phi_t/\phi_i &= G(\bar{r} \mid \bar{r}_o) \\ &= F(a\ b) + F(a\ c)\exp(-i\ a^2 d) \end{aligned} \tag{C-6}$$

where $F(x) = \frac{1}{\sqrt{i\pi}} \int_x^\infty \exp(i\ z^2)\ dz$

$a = 2\ K\ r_o$

$b = \sin(\theta - \theta_o)/2$

$c = \sin(\theta + \theta_o)/2$

$d = \sin\theta \sin\theta_o$

Consider the case with flow; i.e., $|\bar{M}_o| = 0$. Equations (C-2) and (C-5) no longer apply and are to be replaced by

$$\phi_i = \exp[i\ K\ (-x_o \cos\theta + y_o \sin\theta)/(1 - M_o \cos\theta)] \tag{C-7}$$

$$\nabla^2\phi + K^2 \left(1 + \frac{i}{K}\bar{M}_o \cdot \bar{\nabla}\right)^2 \phi = 0 \quad \text{or}$$

$$\frac{\partial^2\phi}{\partial x^2}\left(1 - M_o^2\right) + \frac{\partial^2\phi}{\partial y^2} + \frac{\partial^2\phi}{\partial z^2} + i\ 2\ M_o\ K \frac{\partial\phi}{\partial x} + K^2\ \theta = 0 \tag{C-8}$$

This new problem is solved by use of a modified Lorentz transformation which converts the governing equations into the identical form as the no flow case; i.e., let

$$\gamma^2 = 1/(1 - M_o^2)$$

$$(K', x', y', z') = (\gamma K, \gamma x, y, z)$$

$$(\phi_i, \phi_t, \phi) = \exp(-i K' M_o x_o')(\psi_i, \psi_t, \psi)$$

$$\cos\theta' = (\cos\theta - M_o)/(1 - M_o \cos\theta)$$

$$\cos\theta_o' = (\cos\theta_o + M_o)/(1 + M_o \cos\theta_o)$$

Substitution of the transformed quantities into equations (C-3), (C-4), (C-7), and (C-8) results in the following.

$$\psi_i = \exp[i K' (-x_o' \cos\theta' + y_o' \sin\theta')] \tag{C-9}$$

$$\psi_t = \psi_i + \psi \tag{C-10}$$

$$\frac{\partial \psi_t}{\partial y'} = 0 \quad \text{on} \quad y' = 0, x' < 0 \tag{C-11}$$

$$(\nabla')^2 \psi + (K')^2 \psi = 0 \tag{C-12}$$

where (ψ_i, ψ_t, ψ) are the potential functions in the case with flow for the incident, total and diffracted fields, respectively.

These are identical in form to equations (C-2), (C-3), (C-4), and (C-5) for the no flow problem. Hence, the solution for (ψ_t/ψ_i) is given by the static potential solution (ϕ_t/ϕ_i) defined with transformed coordinates:

$$\psi_t/\psi_i = \phi_t/\phi_i \,|_{\text{transform coordinates}} = G(\bar{r}' \,|\, \bar{r}_o') \tag{C-13}$$

The interpretation of this solution in terms of pressure or velocity potential requires consideration of continuity requirements at the edge. For the trailing edge (i.e., M_o is positive), the solution (ψ_t/ψ_i) represents the pressure field. For the leading edge (i.e., M_o is negative), the solution represents the velocity potential field. In order to get pressure, we must differentiate the solution with respect to the space variable in the direction of flow; i.e.,

$$p \sim i K' \psi - M_o \frac{\partial}{\partial x'} \psi$$

Then for the leading edge

$$p_t/p_i = G(\bar{r}' \mid \bar{r}_o') - \sqrt{\frac{i}{\pi}} M_o \frac{(b' + c') \exp[i (a')^2/2]}{a' (1 + M_o \cos \theta')} \tag{C-14}$$

Whereas for the trailing edge

$$p_t/p_i = G(\bar{r}' \mid \bar{r}_o') \tag{C-15}$$

APPENDIX D

THEORETICAL DATA CURVES FOR CYLINDER DIFFRACTION

D. G. Dunn

This appendix contains the theoretical trend figures for noise diffracting about a fuselage (cylinder) structure. A cross reference table shown below is provided to assist use of the trend figures for the analysis (sec. 2.2:2.2) and the interpolation procedure (sec. 4.3.1) of the main engineering report, volume I.

Table D-1.—Cross Reference of Trend Figures and Variables (B, θ)

θ \ B	2.5	10	40	160	320	640
15°	Fig. D-1	Fig. D-1	Fig. D-2	Fig. D-2	Fig. D-3	Fig. D-3
30°	Fig. D-4	Fig. D-4	Fig. D-5	Fig. D-5	Fig. D-6	—
45°	Fig. D-7	Fig. D-7	Fig. D-8	Fig. D-8	Fig. D-9	—
60°	Fig. D-10	Fig. D-10	Fig. D-11	Fig. D-11	—	—
75°	Fig. D-12	Fig. D-12	Fig. D-13	Fig. D-13	—	—

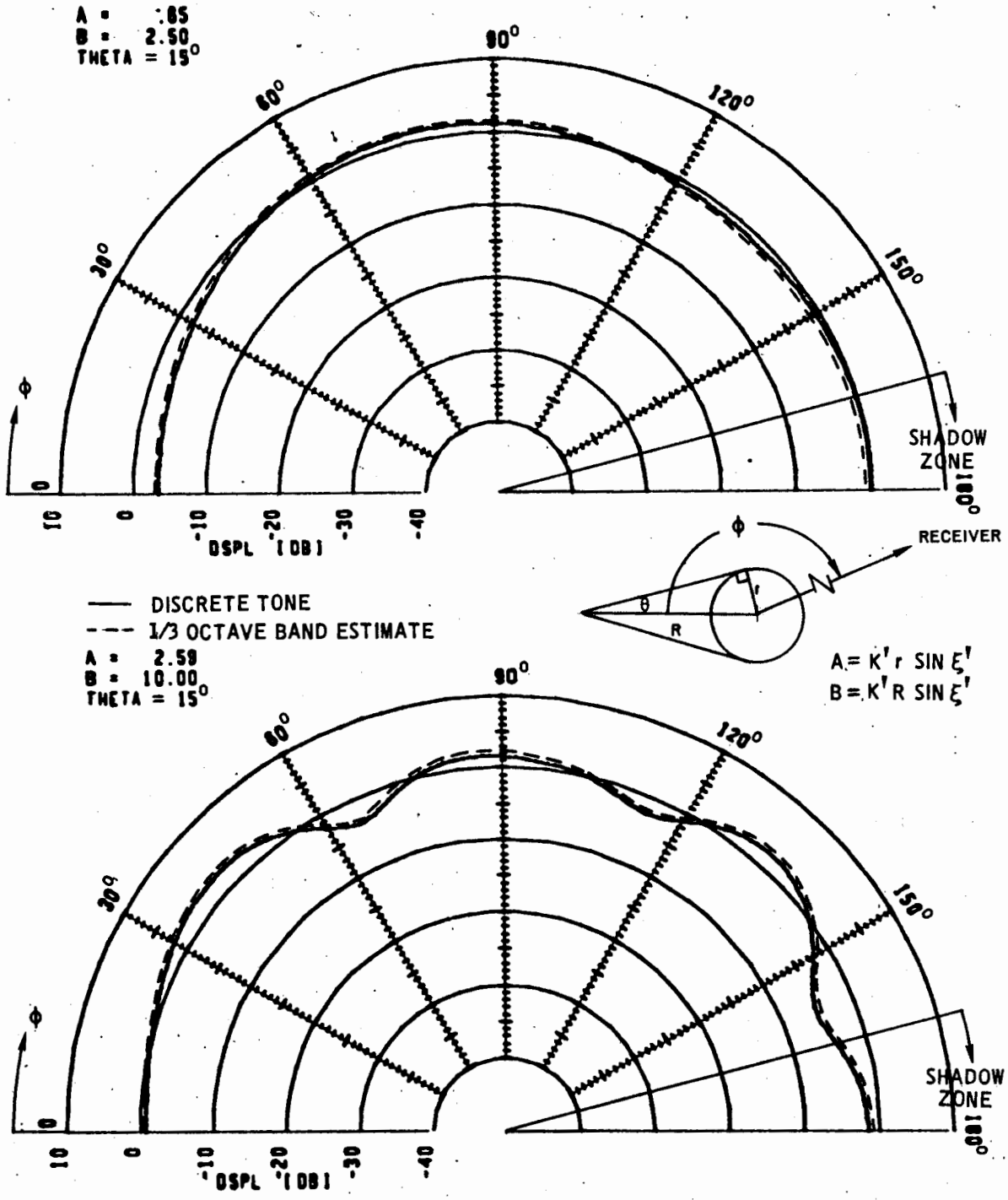

Figure D-1.—Noise Diffraction About a Fuselage

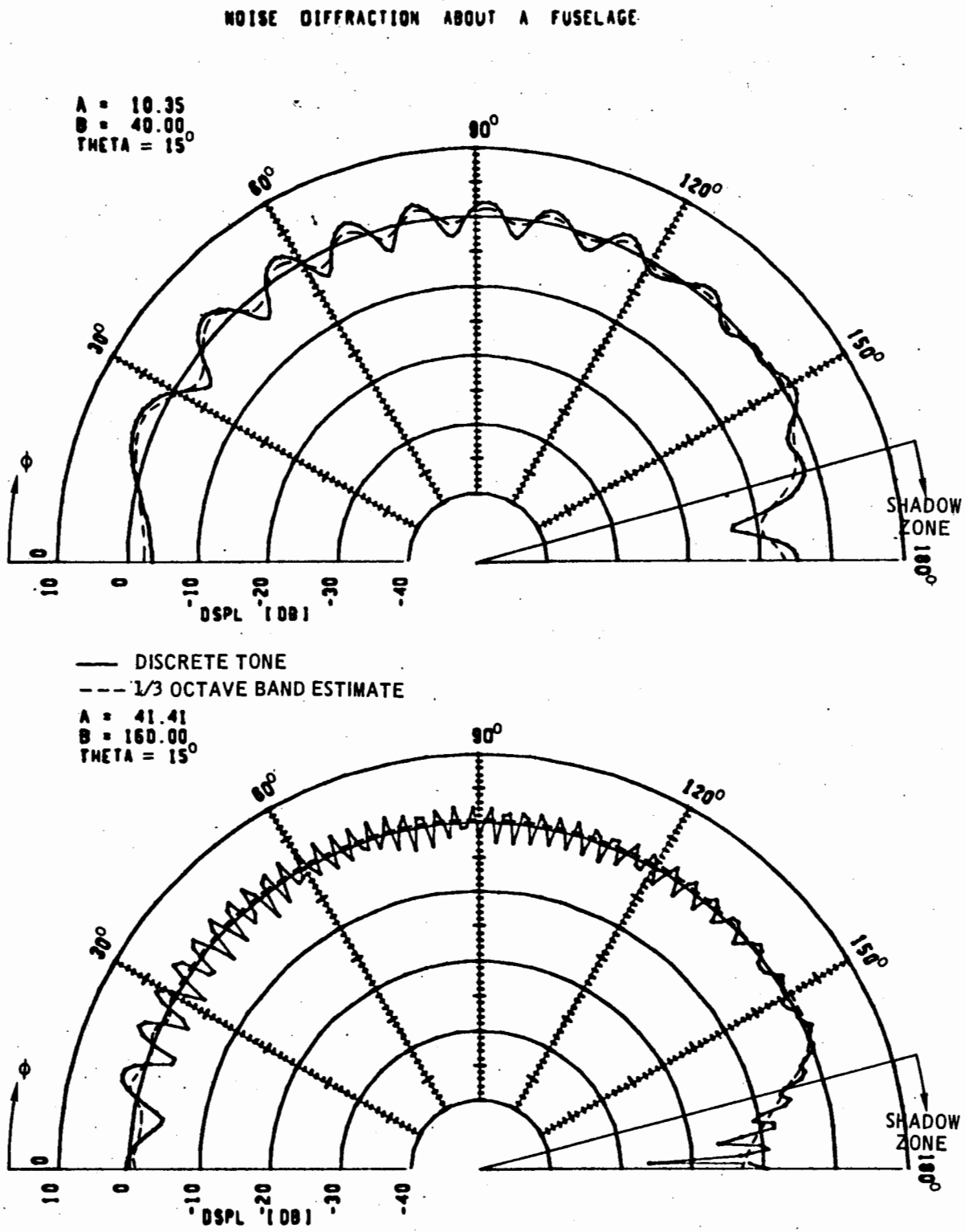

Figure D-2.—Noise Diffraction About a Fuselage

NOISE DIFFRACTION ABOUT A FUSELAGE

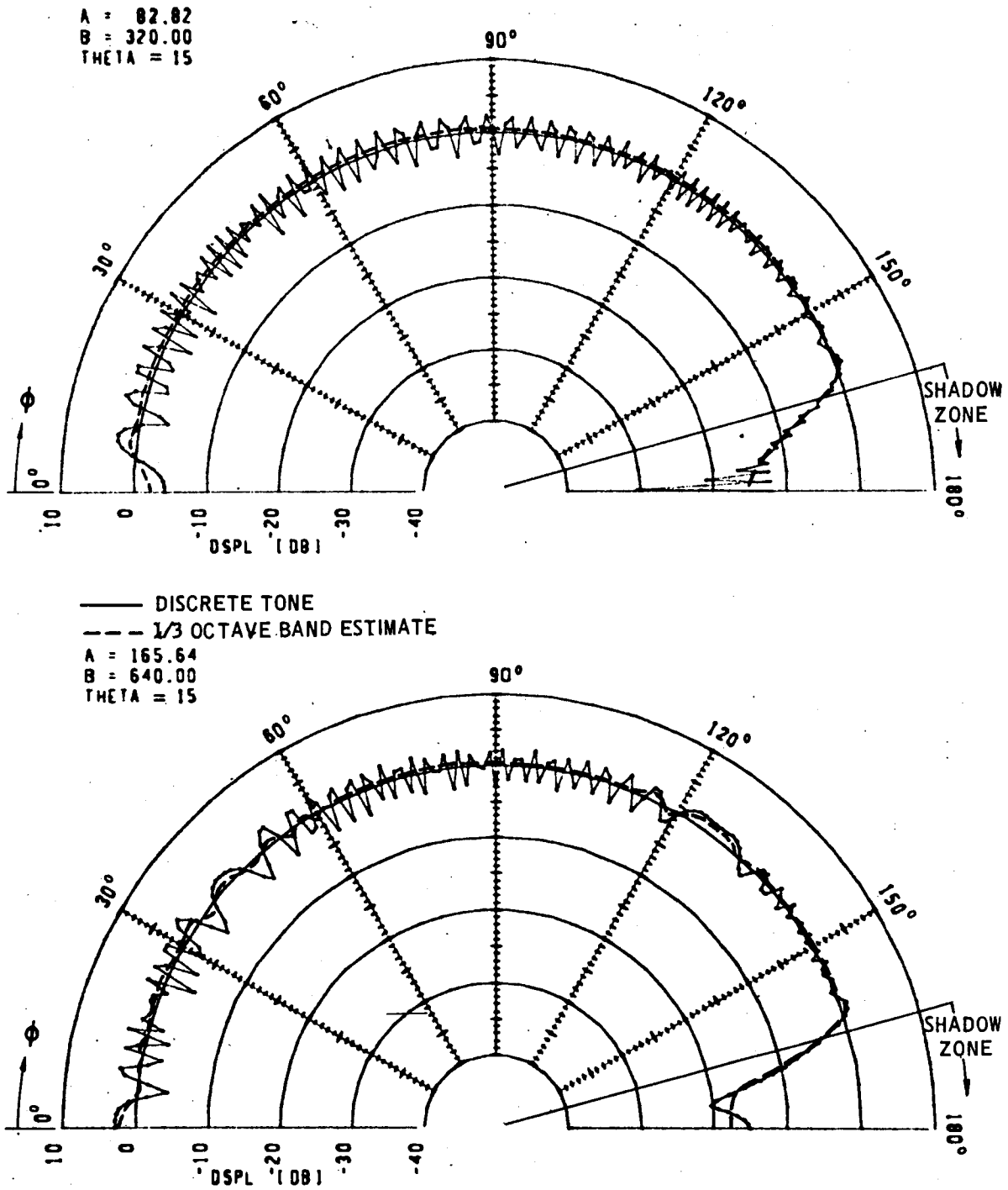

Figure D-3.—Noise Diffraction About a Fuselage

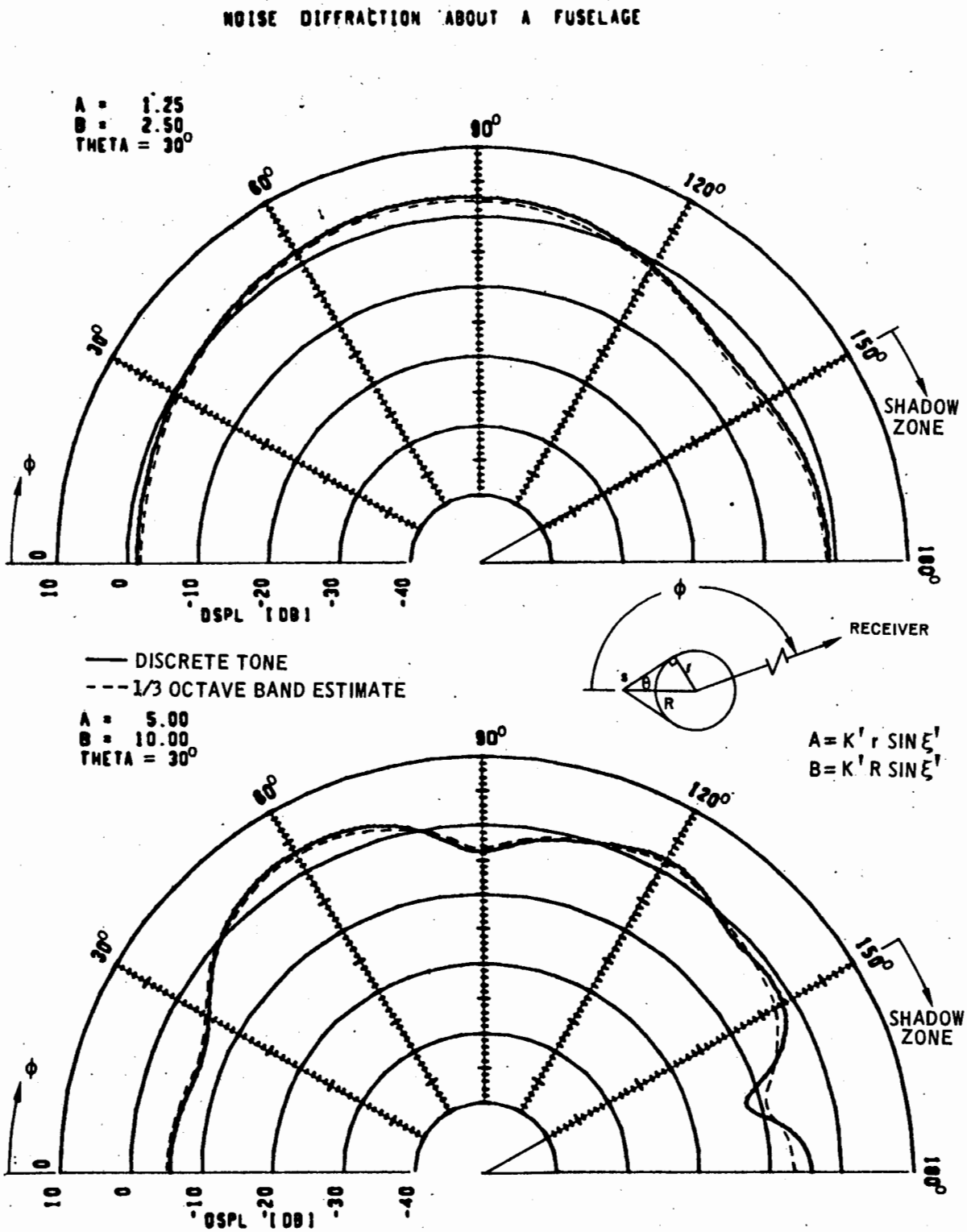

Figure D-4.—Noise Diffraction About a Fuselage

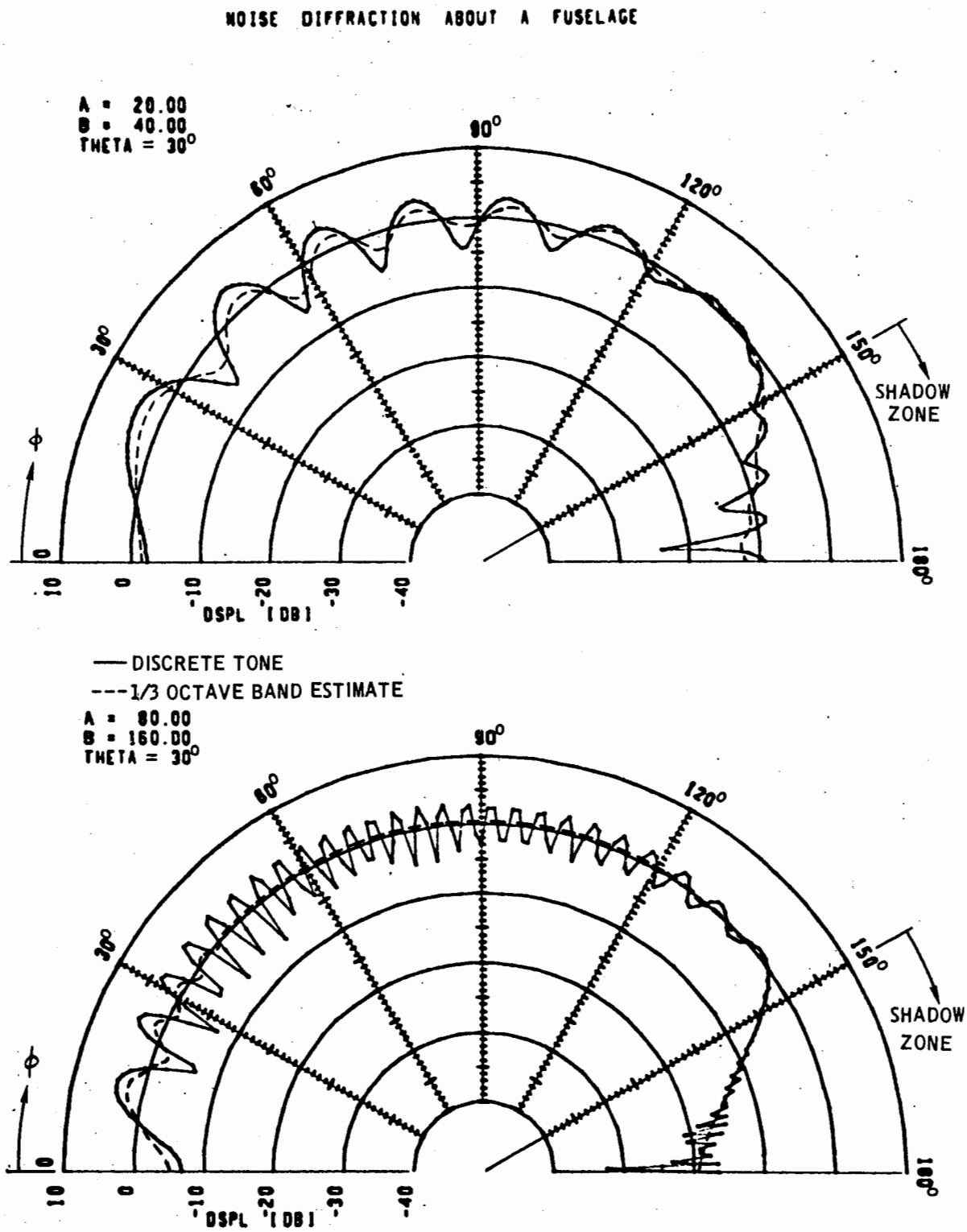

Figure D-5.—Noise Diffraction About a Fuselage

NOISE DIFFRACTION ABOUT A FUSELAGE

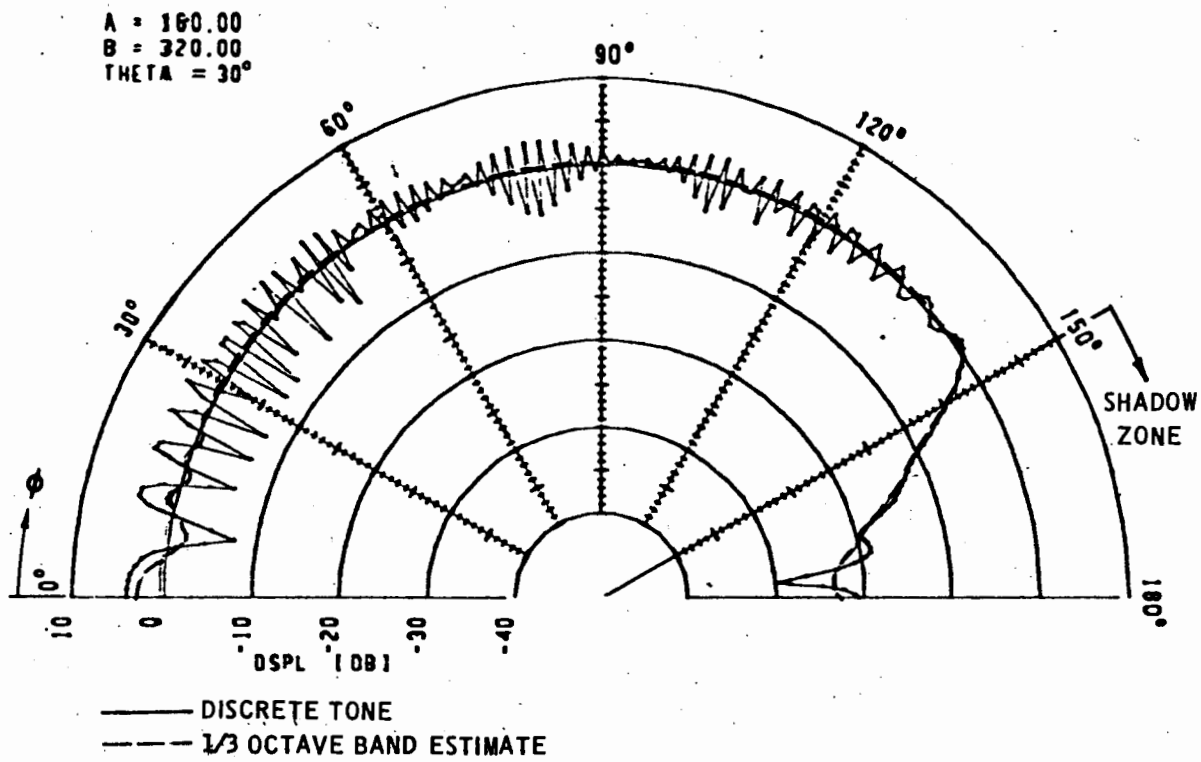

Figure D-6.—Noise Diffraction About a Fuselage

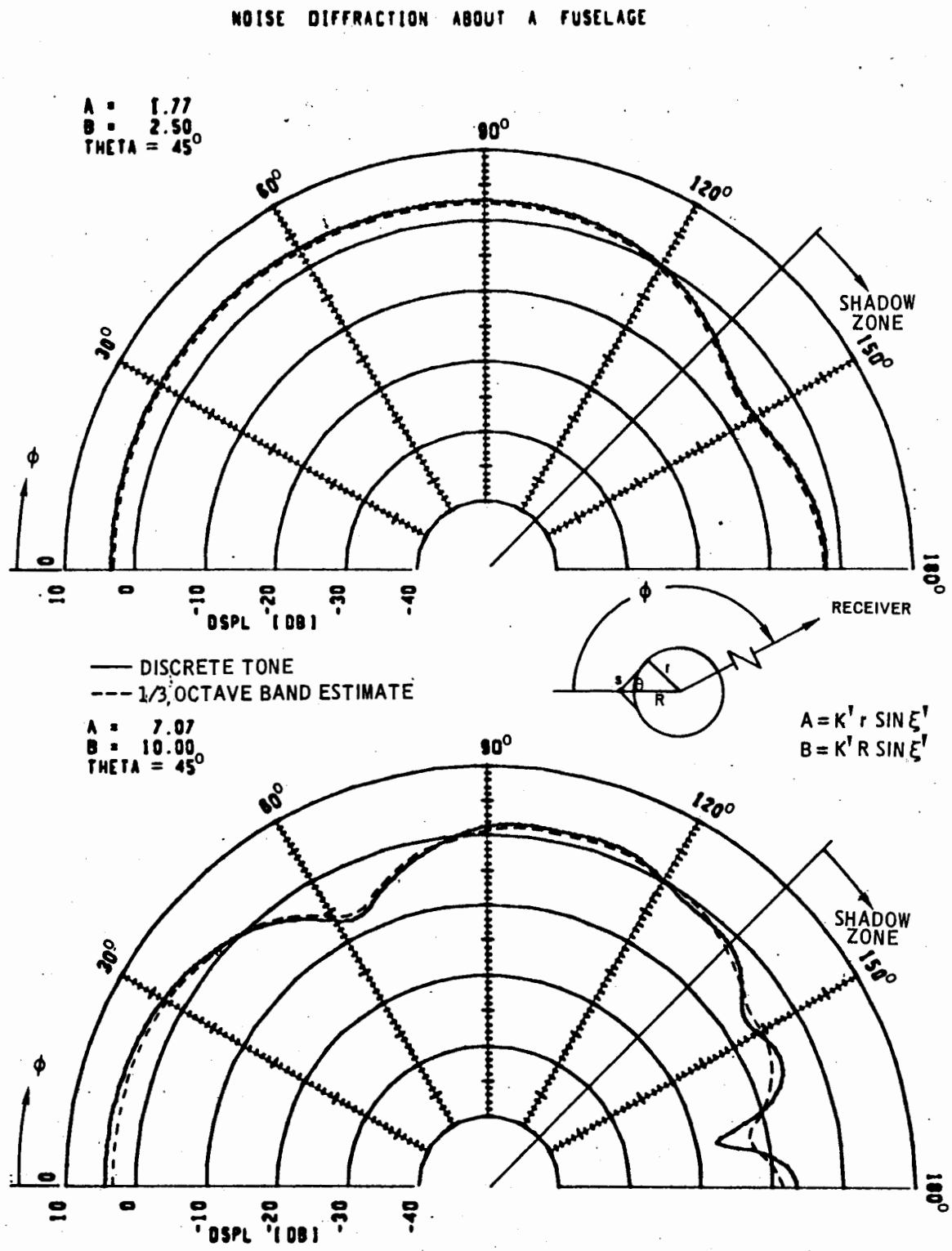

Figure D-7.—Noise Diffraction About a Fuselage

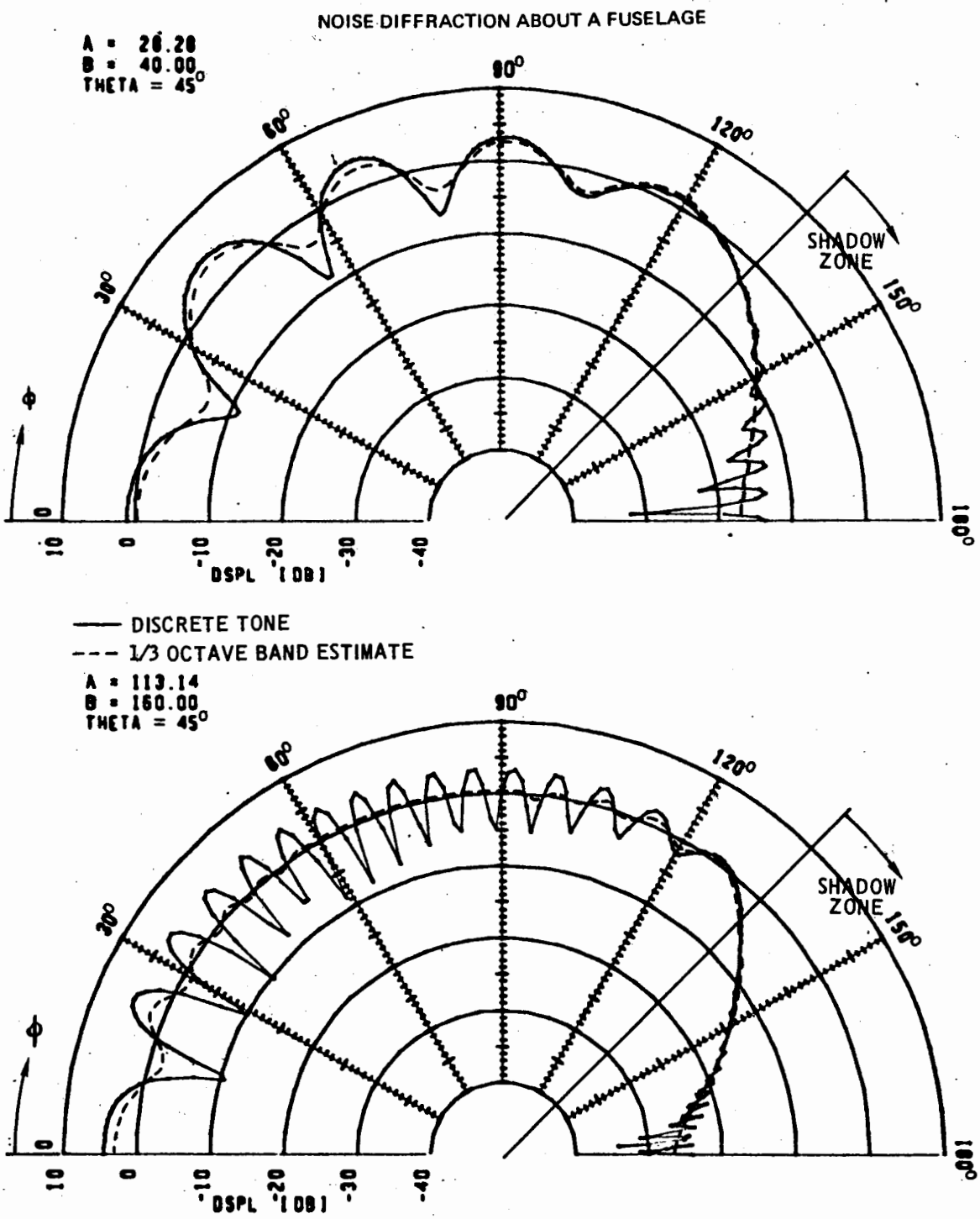

Figure D-8.—Noise Diffraction About a Fuselage

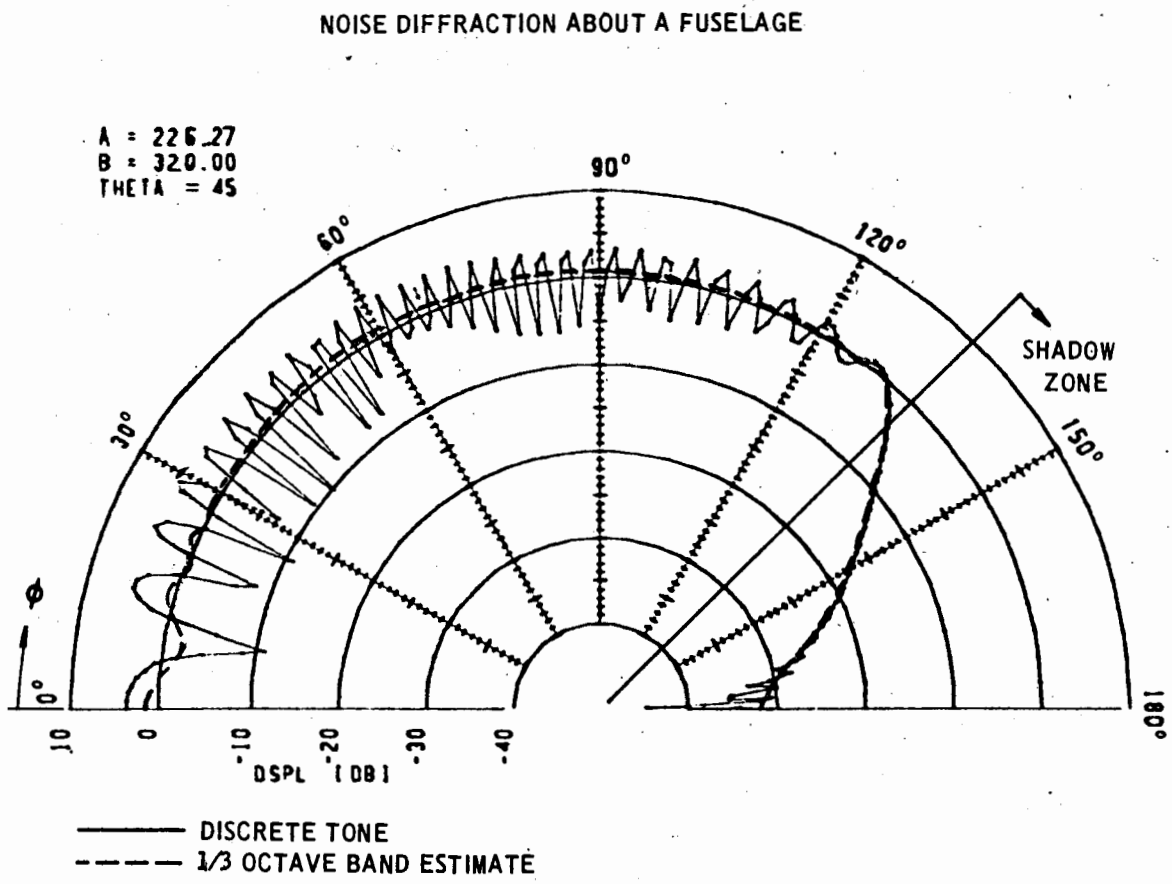

Figure D-9.—Noise Diffraction About a Fuselage

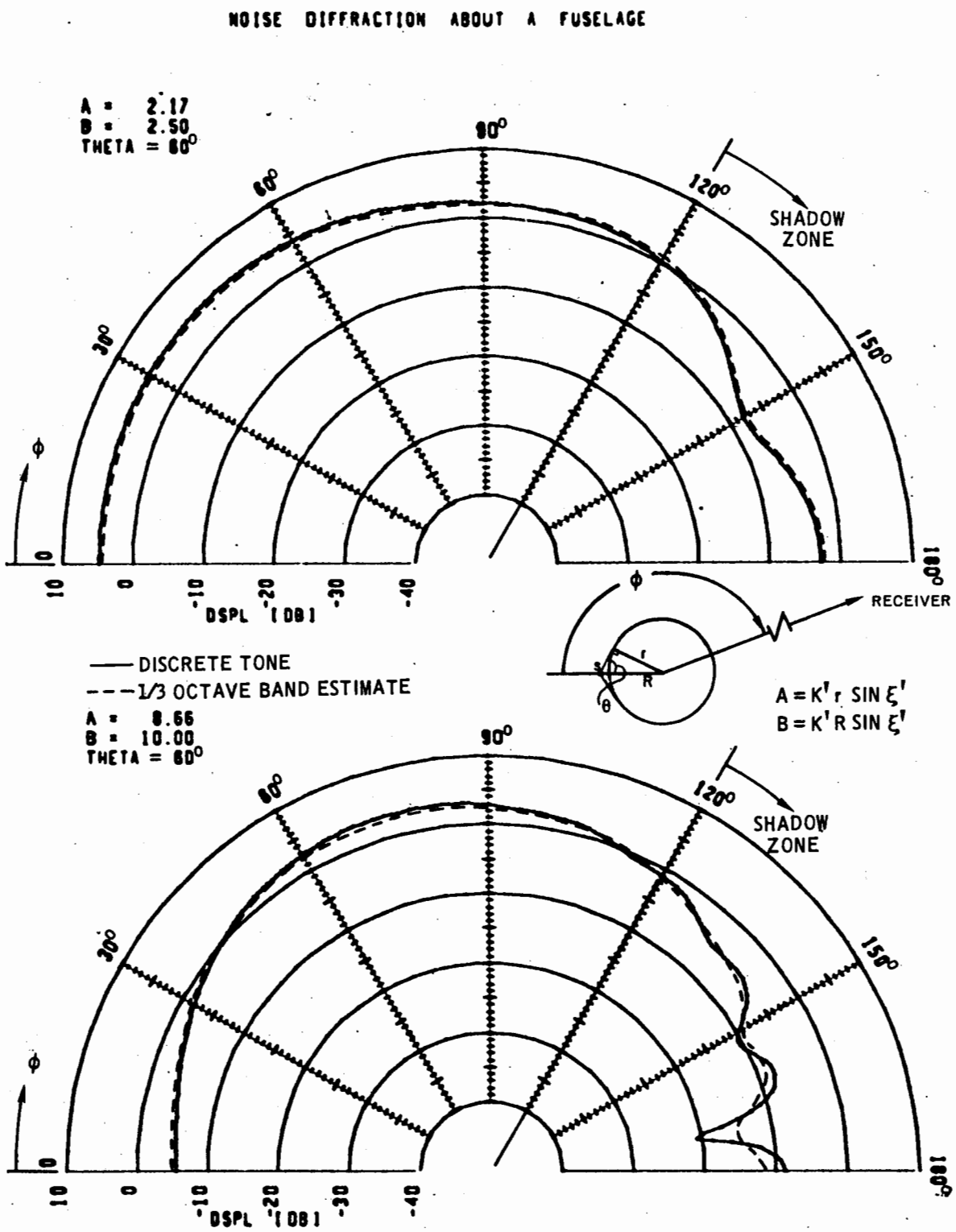

Figure D-10.—Noise Diffraction About a Fuselage

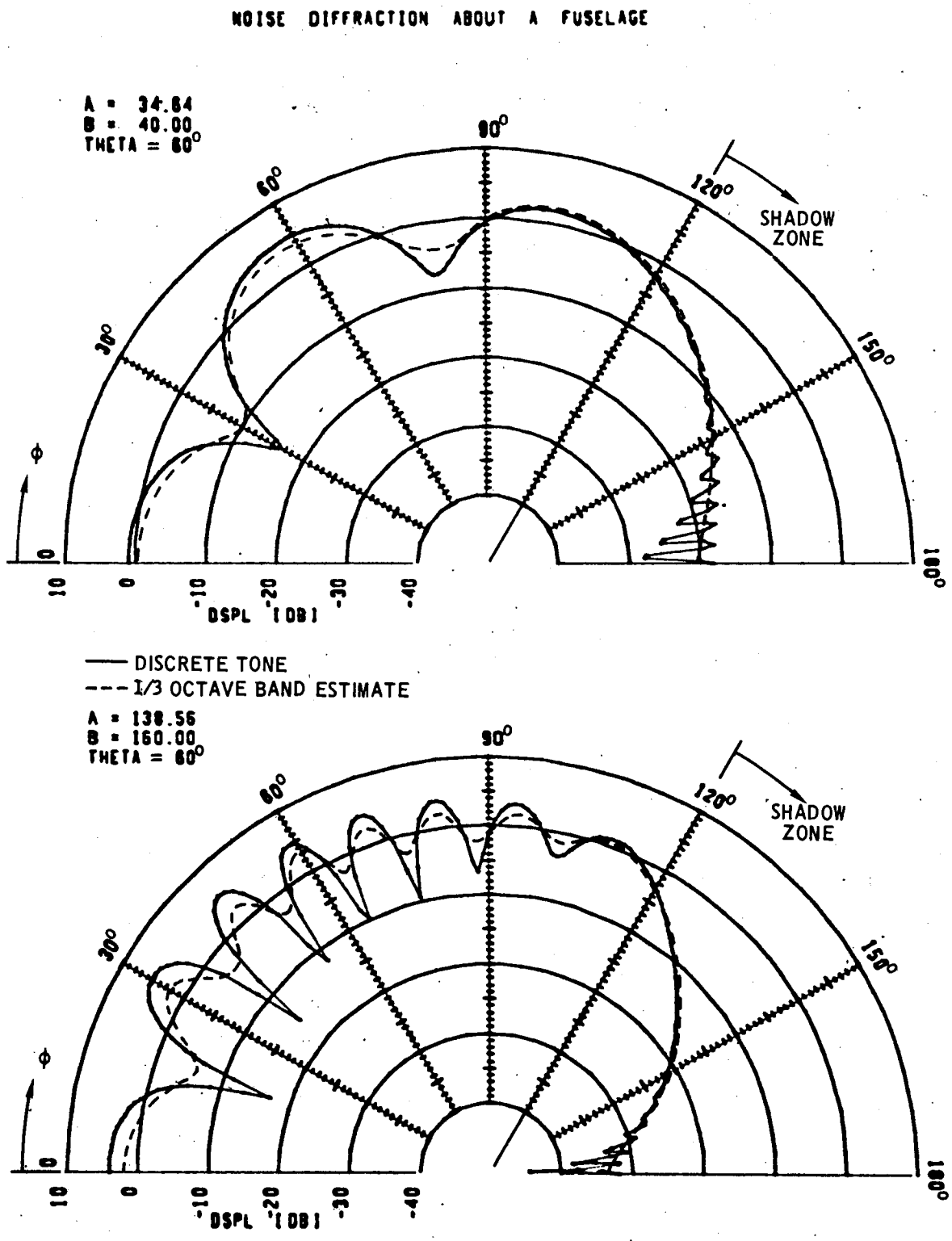

Figure D-11.—Noise Diffraction About a Fuselage

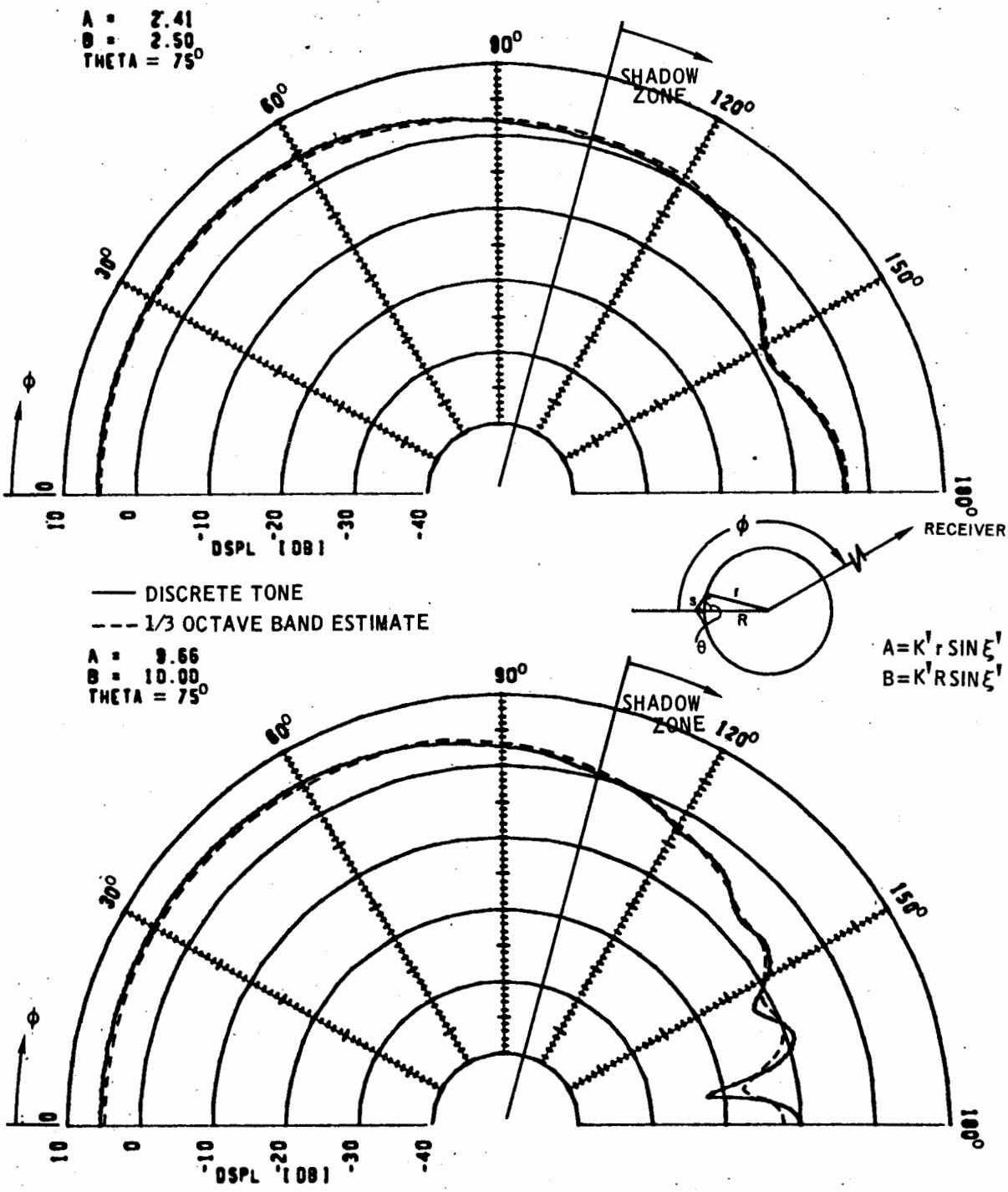

Figure D-12.—Noise Diffraction About a Fuselage

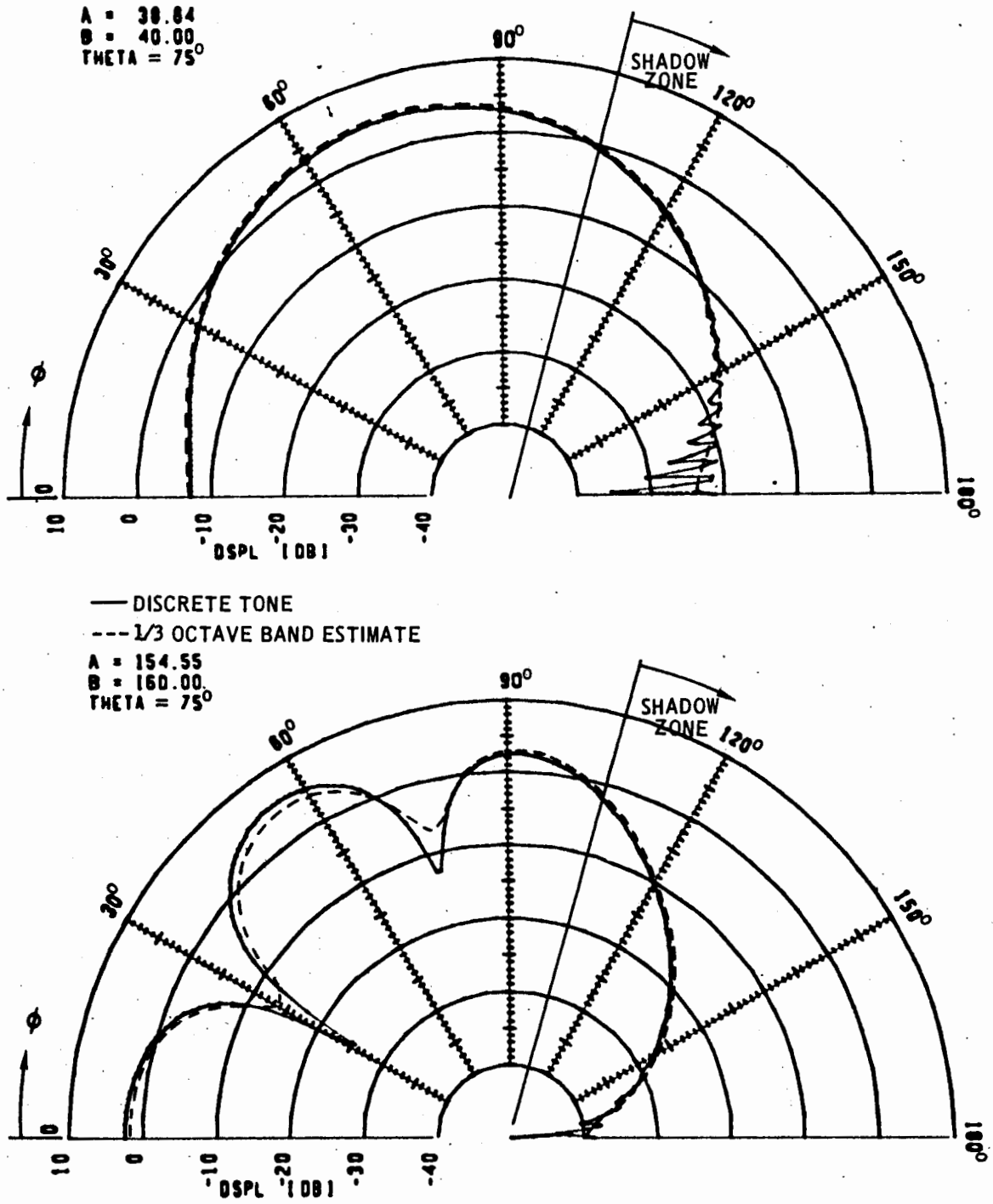

FIGURE 13

Figure D-13.—Noise Diffraction About a Fuselage

APPENDIX E
SOUND REFRACTION BY AIRFOIL TRAILING WAKE

H. Y. Lu

This appendix covers the modeling, the formulation, and the solution of the problem of sound refraction by an airfoil trailing wake.

1.0 ANALYSIS

Sound propagation through the wing trailing wake from an over-the-wing engine presents a problem of sound reflection and refraction. Theoretical work related to this problem has been completed at The Boeing Company[1] and is applicable with modifications to the analysis of sound propagation through the wing trailing wake.

A few simplifications have to be made in modeling the wake and the noise source. The following assumptions are made:

1. The noise sources are fixed relative to the airplane and can be represented by point acoustic sources.

2. The wing trailing wake is constant in velocity and temperature. The velocity is different from that of the freestream, while the temperature is the same.

3. The wake extends to infinity with finite thickness and the presence of the wing as a solid body is ignored in this part of the analysis.

4. Results from this analysis can be superimposed on that of the wing diffraction.

5. A perfect and inviscid gas is assumed.

These assumptions are used to analyze the propagation of sound through the wing trailing wake.

We introduce a time dependent point source $\dot{Q}\ \delta(x)\ \delta(y)\ \delta(z)$ in the flow. $\dot{Q}$ has a physical dimension of mass per unit time. The continuity equation for acoustic distrubances can be written as

$$\frac{\partial S}{\partial t} + U\frac{\partial S}{\partial x} + \frac{\partial u}{\partial x} + \frac{\partial v}{\partial y} + \frac{\partial w}{\partial z} = \dot{q}\ \delta(x)\ \delta(y)\ \delta(z) \qquad \text{(E-1)}$$

---

[1]H. Y. Lu, "Acoustic Far Field of a Point Source in Cylindrical and Parallel Flow Fluid Layers," AIAA Paper No. 75-500, March 1975.

where $q = Q/\rho_0$, and that S is the condensation defined by $\rho = \rho_0(1 + S)$ with ρ_0 as the undisturbed density (fig. E-1). U is the velocity of the uniform flow. u, v, and w are the components of acoustic perturbation on velocity along x, y, and z directions, respectively. c is the speed of sound; i.e., $c^2 = \gamma P_0/\rho_0$.

The momentum equations along x, y, z directions are

$$\frac{\partial u}{\partial t} + U\frac{\partial u}{\partial x} = -c^2\frac{\partial S}{\partial x} \tag{E-2}$$

$$\frac{\partial v}{\partial t} + U\frac{\partial v}{\partial x} = -c^2\frac{\partial S}{\partial y} \tag{E-3}$$

$$\frac{\partial w}{\partial t} + U\frac{\partial w}{\partial x} = -c^2\frac{\partial S}{\partial z} \tag{E-4}$$

The dimensionless acoustic pressure p is

$$p = \frac{P - P_0}{P_0} = \gamma\, S \tag{E-5}$$

with $\gamma = c_p/c_v$

From equations (E-1) through (E-4), u, v, and w are eliminated and S is substituted by p from equation (E-5). The result is

$$\left(\frac{\partial}{\partial t} + U\frac{\partial}{\partial x}\right)^2 p - c^2\nabla^2 p = \gamma\left(\frac{\partial}{\partial t} + U\frac{\partial}{\partial x}\right)\dot{q}\,\delta(x)\,\delta(y)\,\delta(z) \tag{E-6}$$

where $\nabla^2 = \frac{\partial^2}{\partial x^2} + \frac{\partial^2}{\partial y^2} + \frac{\partial^2}{\partial z^2}$

Apply Fourier transform to equation (E-6),

$$F'' + \zeta^2 F = \frac{i}{4\pi^2}\frac{\gamma}{c}\left(\frac{\omega}{c} - M\,k_x\right) Q_\omega\,\delta(z) \tag{E-7}$$

where $$F(z) = \frac{1}{8\pi^3}\int_{-\infty}^{\infty}\int_{-\infty}^{\infty}\int_{-\infty}^{\infty} p\, e^{-i(k_x x + k_y y - \omega t)}\, dx\, dy\, dt$$

$$p = \int_{-\infty}^{\infty}\int_{-\infty}^{\infty}\int_{-\infty}^{\infty} F(z)\, e^{i(k_x x + k_y y - \omega t)}\, dk_x\, dk_y\, d\omega$$

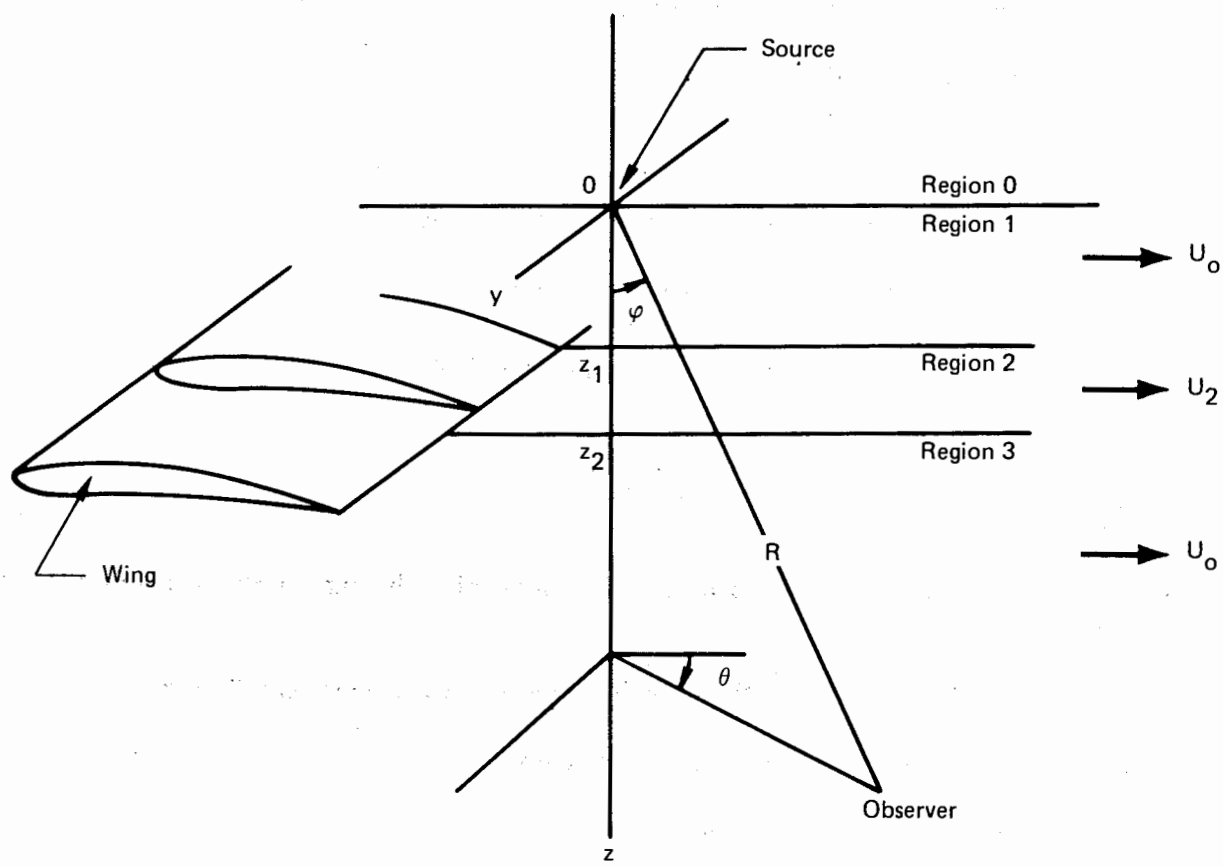

Figure E-1.—Model for Sound Refraction Through Wing Trailing Wake

and $$Q_\omega = \frac{1}{2\pi} \int_{-\infty}^{\infty} \dot{q}\, e^{i\omega t}\, dt$$

$$\zeta^2 = \frac{\omega^2}{c^2} - \frac{2M\,\omega\, k_x}{c} - (1 - M^2)\, k_x^2 - k_y^2$$

with Mach number M = U/c. Omega (ω) is the angular frequency; k_x and k_y are the wave number in x and y directions, respectively.

The solution of equation (E-7) is

$$F_j = a_j\, e^{i\zeta_j z} + b_j\, e^{-i\zeta_j z} \tag{E-8}$$

where j = 0, 1, 2, 3 for regions 0, 1, 2, and 3, respectively.

Since regions 0, 1, and 3 have identical flow conditions,

$$\zeta_o^2 = \zeta_1^2 = \zeta_3^2 = \frac{\omega^2}{c^2} - \frac{2M_o\,\omega\, k_x}{c} - (1 - M_o^2)\, k_x^2 - k_y^2$$

$$\zeta_2^2 = \frac{\omega^2}{c^2} - \frac{2M_2\,\omega k_x}{c} - (1 - M_2^2)\, k_x^2 - k_y^2$$

Eight boundary (Bi) conditions are needed to determine the eight unknown constants a_j and b_j.

B1. In region 0, we have only the outgoing waves and therefore $a_o = 0$ for $z \to -\infty$.

B2. Outgoing waves for region 3, $b_3 = 0$ as $z \to \infty$.

B3. Integrating equation (E-7) across z = 0,

$$F_1'(0) - F_o'(0) = \frac{i}{4\pi^2}\, \frac{\gamma}{c^2} (\omega - k_x\, U_o)\, Q_\omega$$

or more explicitly,

$$i\zeta_o\, (a_1 - b_1) + i\zeta_o\, b_o = \frac{i}{4\pi^2}\, \frac{\gamma}{c^2} (\omega - k_x U_o)\, Q_\omega$$

B4. Continuous pressure at z = 0,

$$b_o = a_1 + b_1$$

Continuous pressure at interfaces $z = z_1$, and $z = z_2$.

B5. $$a_1\, e^{i\zeta_o z_1} + b_1\, e^{-i\zeta_o z_1} = a_2\, e^{i\zeta_2 z_1} + b_2\, e^{-i\zeta_2 z_1}$$

B6. $a_2 e^{i\zeta_2 z_2} + b_2 e^{-i\zeta_2 z_1} = a_3 e^{i\zeta_o z_2}$

Continuous displacement η of the interface at $z = z_1$ and $z = z_2$, we have

$$w = \left(\frac{\partial}{\partial t} + U\frac{\partial}{\partial x}\right)\eta$$

From equation (E-3)

$$\left(\frac{\partial}{\partial t} + U\frac{\partial}{\partial x}\right)^2 \eta = -\frac{c^2}{\gamma}\frac{\partial p}{\partial z}$$

After Fourier transform

$$\bar{\eta} = \frac{c^2}{\gamma(-\omega + k_x U)^2}\frac{dF}{dz}$$

where $\bar{\eta}$ is the Fourier transformed displacement which has to be equal on both sides of the interface; i.e.,

B7.
$$\frac{c^2}{\gamma(\omega - k_x U_o)^2}\left[a_1 \zeta_o e^{i\zeta_o z_1} - b_1 \zeta_o e^{-i\zeta_o z_1}\right] = \frac{c^2}{\gamma(\omega - k_x U_2)^2}\left[a_2 \zeta_2 e^{i\zeta_2 z_1} - b_2 \zeta_2 e^{-i\zeta_2 z_1}\right]$$

B8.
$$\frac{c^2}{\gamma(\omega - k_x U_2)^2}\left[a_2 \zeta_2 e^{i\zeta_2 z_2} - b_2 \zeta_2 e^{-i\zeta_2 z_2}\right] = \frac{c^2}{\gamma(\omega - k_x U_o)^2} a_3 \zeta_o e^{i\zeta_o z_2}$$

These eight boundary conditions provide the solution of the coefficients a_1 and a_3 given at the end of this appendix. In region 3 we have

$$F_3 = a_3 e^{i\zeta_o z}$$

The dimensionless pressure for each frequency ω is

$$p_{3\omega} = \int_{-\infty}^{\infty}\int_{-\infty}^{\infty} a_3 e^{iR h_3} dk_x dk_y \qquad \text{(E-9)}$$

where we have made the following change of variables (fig. E-1).

$$x = R \sin\varphi \cos\theta$$

$$y = R \sin\varphi \sin\theta$$

$$z = R \cos\varphi$$

$$h_3 = \left[\left(\frac{\omega}{c}\right)^2 - \frac{2k_x M_o \omega}{c} - (1 - M_o^2) k_x^2 - k_y^2\right]^{1/2} \cos\varphi + k_x \sin\varphi \cos\theta + k_y \sin\varphi \sin\theta$$

The integrations in equation (E-9) can be performed asymptotically for $R \to \infty$.

2.0 FAR-FIELD SOLUTION AND THE TRANSMISSION COEFFICIENT

When the observer is at a great number of wave lengths away from the source, an asymptotic solution for the acoustic far/field can be found by the stationary phase method. Equation (E-9) is evaluated at the stationary phase for the asymptotic expression as $R \to \infty$

$$p_{3\omega} \sim -\frac{2\pi i}{R}\frac{\omega}{c}\cos\varphi \frac{\dfrac{1}{1-M_o^2} - \dfrac{(1-M_o^2)\sin^2\varphi\cos^2\theta}{1-M_o^2+M_o^2\sin^2\varphi\cos^2\theta}}{1-\sin^2\varphi\cos^2\theta} a_{3S}\, e^{iR\,h_{3S}} \qquad \text{(E-10)}$$

where a_{3S} and h_{3S} are a_3 and h_3 evaluated at the stationary phase. The stationary phase wave numbers are given in the following section.

We define the sound transmission coefficient T_ω for the frequency ω as

$$T_\omega \equiv \left| \frac{p_{3\omega}}{p_{1\omega\infty}} \right| \qquad \text{(E-11)}$$

where $p_{1\omega\infty}$ is the reference dimensionless acoustic pressure for the same source in an infinite air at rest. We have

$$p_{1\omega\infty} \sim -\frac{2\pi i}{R}\frac{\omega}{c}\cos\varphi\, a_{1\infty}\, e^{iR\,\omega/c} \qquad \text{(E-12)}$$

where

$$a_{1\infty} = \frac{1}{8\pi^2}\frac{\gamma Q_\omega}{c\cos\varphi}$$

For a subsonic flow case we have

$$T_\omega = \frac{\dfrac{1}{1-M_o^2} - \dfrac{(1-M_o^2)\sin^2\varphi\cos^2\theta}{1-M_o^2+M_o^2\sin^2\varphi\cos^2\theta}}{1-\sin^2\varphi\cos^2\theta} \left|\frac{a_{3S}}{a_{1\infty}}\right| \qquad \text{(E-13)}$$

For convenience, let $\omega = 2\pi f$, where f is the frequency. The transmission coefficient takes the form

$$T_f = 20\log_{10}|T_{2\pi f}| \qquad \text{(E-14)}$$

which gives a unit of decibels.

3.0 NOTES ON EXPRESSIONS FOR a_1, a_3 AND STATIONARY PHASE WAVE NUMBERS

$$a_1 = \frac{1}{8\pi^2} \frac{\gamma\,(\omega - k_x U_o)}{C^2\,\zeta} Q_\omega$$

$$a_3 = \frac{i\,Q_\omega}{4\pi^2} \frac{C^2\,\zeta_2}{\gamma(\omega - k_x U_o)\,(\omega - k_x U_2)^2} \frac{1}{A\sin(\zeta_2 D) + iB\cos(\zeta_2 D)}$$

where

$$D = z_2 - z_1$$

$$A = \frac{C^4\,\zeta_2^2}{\gamma^2\,(\omega - k_x U_2)^4} + \frac{C^4 \zeta_o^2}{\gamma^2\,(\omega - k_x U_o)^4}$$

$$B = \frac{2\,C^4\,\zeta_2\,\zeta_o}{\gamma^2\,(\omega - k_x U_2)^2\,(\omega - k_x U_o)^2}$$

$$k_{xs} = \frac{\omega}{c}\left[\frac{\sin\varphi\cos\theta}{\left(1 - M_o^2 + M_o^2\sin^2\varphi\cos^2\theta\right)^{1/2}} - \frac{M_o}{1 - M_o^2}\right]$$

$$k_{ys} = \frac{\omega}{c}\left[\frac{1}{1 - M_o^2} - \frac{(1 - M_o^2)\sin^2\varphi\cos^2\theta}{1 - M_o^2 + M_o^2\sin^2\varphi\cos^2\theta}\right]^{1/2} \frac{\sin\varphi\sin\theta}{(1 - \sin^2\varphi\cos^2\theta)^{1/2}}$$

APPENDIX F
SPATIAL AVERAGING FACTOR I

C. H. Berman

The averaging factor I is defined as

$$I = \frac{\dfrac{\overline{u'^2}}{u_A^{\,2}} \dfrac{d\sigma_s}{d\Omega} \dfrac{dx\,dy}{(x+b)^2 + y^2 + h^2}}{\pi \left[\dfrac{\overline{u'^2}}{u_A^{\,2}} \dfrac{d\sigma_s}{d\Omega} \right]_{\text{typical}}}$$

with the source located at $x = -b$, $y = h$, $z = 0$ relative to the trailing edge as shown in figure 37 of volume I.

We will arbitrarily write

$$\frac{\overline{u'^2}}{\overline{u'^2}\Big|_{\text{typical}}} = \frac{1}{1 + \dfrac{x}{c}}$$

and consider $d\sigma_s/d\Omega$ which is actually a function of $\ell = \ell(x)$ at fixed frequency, to be nearly constant as a function of x. This is almost true for the higher Strouhal number (S) values shown in figures 41 and 42 of section 2.2.4.2 (vol. I), and our estimates will involve cases which are either in or close to this regime. Direct integration then leads to

$$I = \frac{1}{\sqrt{\left(\dfrac{h}{c}\right)^2 + \left(\dfrac{b}{c} - 1\right)^2}} \ln \left| \frac{\left[\left(\dfrac{h}{c}\right)^2 + \left(\dfrac{b}{c} - 1\right)^2\right]^{1/2} \left(\dfrac{b^2 + h^2}{c^2}\right)^{1/2} + \dfrac{h^2}{c^2} + \dfrac{b}{c}\left(\dfrac{b}{c} - 1\right)}{\left[\left(\dfrac{h}{c}\right)^2 + \left(\dfrac{b}{c} - 1\right)^2\right]^{1/2} + \dfrac{b}{c} - 1} \right|$$

For example, in the limit $b = h = c$

$$I = \ln\left[\sqrt{2} + 1\right] = 0.881$$

for $h = 0$

$$I = \frac{1}{1 - \dfrac{b}{c}} \ln\left(\frac{c}{b}\right)$$

which has the value $I = 1$ when $b = c$ and a logarithmic singularity when $b/c \to 0$.

If b = 0

$$I = \frac{1}{\sqrt{\left(\frac{h}{c}\right)^2 + 1}} \ln \left| \frac{\left[\left(\frac{h}{c}\right)^2 + 1\right]^{1/2} \frac{h}{c} + \left(\frac{h}{c}\right)^2}{\left[\left(\frac{h}{c}\right)^2 + 1\right]^{1/2} - 1} \right|$$

which has the value

$$I = \frac{1}{\sqrt{2}} \ln \left| \frac{\sqrt{2} + 1}{\sqrt{2} - 1} \right| = 1.25$$

when h = c and which becomes in the limit $h/c \to 0$

$$I = \ln \left| \frac{2c}{h} \right|$$

Thus, scattering evaluations using $I \approx 1.0$ will be fairly good unless the source starts to get close to the trailing edge where a logarithmic singularity occurs.

APPENDIX G
SPECTRUM SHAPE FACTOR FOR JET/EDGE INTERACTION NOISE

L. Filler

The normalized sound pressure level given by equation (82) of volume I is defined to have a maximum at $f/f_0 = 1$; i.e., f_0 is the frequency at which the spectrum peaks. Therefore,

$$\frac{d\left[S(f/f_o)\right]}{d(f/f_o)} = 0, \quad \text{at } f/f_o = 1$$

Differentiating equation (82) (vol.I) gives,

$$\frac{d\left[S(f/f_o)\right]}{d(f/f_o)} = 10\,\frac{\left[1 + F\,(f/f_o)^{\gamma}\right]^{\nu}}{(1+F)^{\nu}(f/f_o)^{\mu}}\,(1+F)^{\nu}\,\frac{d}{d(f/f_o)}\left\{\frac{(f/f_o)^{\mu}}{\left[1 + F\,(f/f_o)^{\gamma}\right]^{\nu}}\right\} = 0$$

which is satisfied by,

$$\left(\frac{f}{f_o}\right)^{\mu} d\left\{\left[1 + F\,(f/f_o)^{\gamma}\right]^{\nu}\right\} - \left[1 + F\,(f/f_o)^{\gamma}\right]^{\nu} d\left\{(f/f_o)^{\mu}\right\} = 0$$

Carrying out the indicated differentiations yields, after a little algebra,

$$(\gamma\,\nu - \mu)\,F\,(f/f_o)^{\gamma} - \mu = 0$$

For the maximum to occur at $f/f_0 = 1$, the required condition is,

$$F = \frac{\mu}{\gamma\,\nu - \mu} \tag{G-1}$$

It is immediately seen that F is the ratio of the low frequency ($f/f_0 << 1$) to high frequency ($f/f_0 >> 1$) falloff from the peak. From equation (82) (vol. I), the low frequency limit is,

$$S(f/f_o) \approx 10\log(1+F)^{\nu}\,(f/f_o)^{\mu} \quad ; \quad \frac{f}{f_o} << 1 \tag{G-2}$$

and the high frequency limit is

$$S(f/f_o) \approx 10\log\left(\frac{1+F}{F}\right)^{\nu}(f/f_o)^{\mu - \gamma\,\nu} \quad ; \quad \frac{f}{f_o} >> 1 \tag{G-3}$$

hence, $\mu/(\gamma\nu - \mu)$ is the stated ratio.

APPENDIX H

RELATIVE VELOCITY SCALING IN JET/EDGE INTERACTION NOISE

L. Filler

For simplicity, consider forward velocity effects for the nozzle on the wing case. From the estimation equation, the relevant terms are

$$10 \log\left(V_j \; V_R^4\right) - 10 \left| \log\left(\frac{L_{c_o}}{L} \frac{V_j}{V_R}\right) \right|$$

and two cases may be distinguished:

1. If, $L \leq L_{c_o}$ it follows that $L \leq L_{c_o} \; V_j/V_R$ is always satisfied. In this case the above terms can be written as,

$$10 \log\left(V_j \; V_R^4\right) - 10 \log\left(\frac{L_{c_o}}{L} \frac{V_j}{V_R}\right) \sim 10 \log V_R^5$$

   which confirms the result of Bhat and Gallo-Rosso (ref. 49, vol. I) that for $L \leq L_c$ the interaction noise is reduced with forward velocity and depends on relative velocity to the fifth power.

2. If, $L > L_{c_o} \; V_j/V_R$ there results

$$10 \log\left(V_j \; V_R^4\right) + 10 \log\left(\frac{L_{c_o}}{L} \frac{V_j}{V_R}\right) \sim 10 \log V_j^2 \; V_R^3$$

   which states that the interaction noise does not decrease as rapidly but depends on the product of jet velocity squared and relative velocity cubed when the stretched potential core length remains smaller than the shield length.

GPO 907-576