COPY 1

FAA-RD-76-147
MTR-7275

Performance Test Requirements for the Discrete Address Beacon System (DABS) Engineering Models

ROBERT W. LAUTENSCHLAGER
PAUL R. PURCELL

NAFEC
LIBRARY
OCT 19 '76

FINAL REPORT

SEPTEMBER 1976

Document is available to the public through the
National Technical Information Service,
Springfield, Virginia 22161.

Prepared for

U.S. DEPARTMENT OF TRANSPORTATION
FEDERAL AVIATION ADMINISTRATION
Systems Research & Development Service
Washington, D.C. 20590

NOTICE

This document is disseminated under the sponsorship of the Department of Transportation in the interest of information exchange. The United States Government assumes no liability for its contents of use thereof.

TECHNICAL REPORT STANDARD TITLE PAGE

1. Report No.	2. Government Accession No.	3. Recipient's Catalog No.
FAA-RD-76-147		

4. Title and Subtitle	5. Report Date
Performance Test Requirements for the Discrete Address Beacon System (DABS) Engineering Models	September 1976
	6. Performing Organization Code: W-41
7. Author(s): Robert W. Lautenschlager, Paul R. Purcell	8. Performing Organization Report No.: MTR-7275
9. Performing Organization Name and Address: The MITRE Corporation, METREK Division, 1820 Dolley Madison Blvd., McLean, Virginia 22101	10. Work Unit No.
	11. Contract or Grant No.: DOT-FA69NS-162
12. Sponsoring Agency Name and Address: U.S. Department of Transportation, Federal Aviation Administration, Research and Development Service, Washington, D.C. 20590	13. Type of Report and Period Covered: Final Report.
	14. Sponsoring Agency Code: DOT/FAA/SRDS

15. Supplementary Notes

16. Abstract

Technical requirements for Performance Testing of the Discrete Address Beacon System (DABS) at NAFEC are presented. The technical requirements are specified in terms of test objectives for DABS single site and multisite performance tests. The objectives are organized into the following test stages: Surveillance, Communications, Failure/Recovery Modes, Capacity/Response Time, and Functional Reliability and Maintainability. Specific objectives for the various tests within each of these stages are described.

The accomplishment of the test objectives will provide the basis for an analysis of DABS technical performance at a functional level.

The tasks which comprise the test program are described and basic organizational responsibilities are defined. The documentation to plan and report the Performance Tests are described.

A schedule depicting DABS availability for the Performance Tests and the schedule requirements for the documentation are presented in the Appendix.

17. Key Words	18. Distribution Statement
Discrete Address Beacon System DABS Performance Test Test Requirements	Document is available to the public through National Technical Information Service, Springfield, VA 22151

19. Security Classif. (of this report)	20. Security Classif. (of this page)	21. No. of Pages	22. Price
Unclassified	Unclassified	89	

Form DOT F 1700.7 (8-69)

METRIC CONVERSION FACTORS

Approximate Conversions to Metric Measures

Symbol	When You Know	Multiply by	To Find	Symbol
		LENGTH		
in	inches	*2.5	centimeters	cm
ft	feet	30	centimeters	cm
yd	yards	0.9	meters	m
mi	miles	1.6	kilometers	km
		AREA		
in^2	square inches	6.5	square centimeters	cm^2
ft^2	square feet	0.09	square meters	m^2
yd^2	square yards	0.8	square meters	m^2
mi^2	square miles	2.6	square kilometers	km^2
	acres	0.4	hectares	ha
		MASS (weight)		
oz	ounces	28	grams	g
lb	pounds	0.45	kilograms	kg
	short tons (2000 lb)	0.9	tonnes	t
		VOLUME		
tsp	teaspoons	5	milliliters	ml
Tbsp	tablespoons	15	milliliters	ml
fl oz	fluid ounces	30	milliliters	ml
c	cups	0.24	liters	l
pt	pints	0.47	liters	l
qt	quarts	0.95	liters	l
gal	gallons	3.8	liters	l
ft^3	cubic feet	0.03	cubic meters	m^3
yd^3	cubic yards	0.76	cubic meters	m^3
		TEMPERATURE (exact)		
°F	Fahrenheit temperature	5/9 (after subtracting 32)	Celsius temperature	°C

*1 in = 2.54 (exactly). For other exact conversions and more detailed tables, see NBS Misc. Publ. 286, Units of Weights and Measures, Price $2.25, SD Catalog No. C13.10:286.

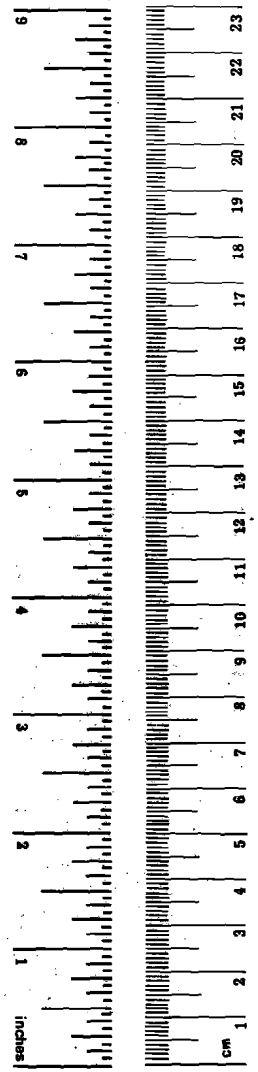

Approximate Conversions from Metric Measures

Symbol	When You Know	Multiply by	To Find	Symbol
		LENGTH		
mm	millimeters	0.04	inches	in
cm	centimeters	0.4	inches	in
m	meters	3.3	feet	ft
m	meters	1.1	yards	yd
km	kilometers	0.6	miles	mi
		AREA		
cm^2	square centimeters	0.16	square inches	in^2
m^2	square meters	1.2	square yards	yd^2
km^2	square kilometers	0.4	square miles	mi^2
ha	hectares (10,000 m^2)	2.5	acres	
		MASS (weight)		
g	grams	0.035	ounces	oz
kg	kilograms	2.2	pounds	lb
t	tonnes (1000 kg)	1.1	short tons	
		VOLUME		
ml	milliliters	0.03	fluid ounces	fl oz
l	liters	2.1	pints	pt
l	liters	1.06	quarts	qt
l	liters	0.26	gallons	gal
m^3	cubic meters	35	cubic feet	ft^3
m^3	cubic meters	1.3	cubic yards	yd^3
		TEMPERATURE (exact)		
°C	Celsius temperature	9/5 (then add 32)	Fahrenheit temperature	°F

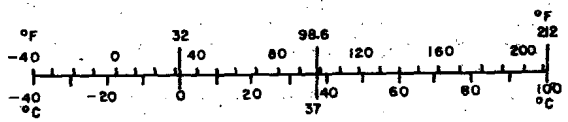

ABSTRACT

Technical requirements for Performance Testing of the Discrete Address Beacon System (DABS) at NAFEC are presented. The technical requirements are specified in terms of test objectives for DABS single site and multisite performance tests. The objectives are organized into the following test stages: Surveillance, Communications, Failure/Recovery Modes, Capacity/Response Time, and Functional Reliability and Maintainability. Specific objectives for the various tests within each of these stages are described.

The accomplishment of the test objectives will provide the basis for an analysis of DABS technical performance at a functional level.

The tasks which comprise the test program are described and basic organizational responsibilities are defined. The documentation to plan and report the Performance Tests are described.

A schedule depicting DABS availability for the Performance Tests and the schedule requirements for the documentation are presented in the Appendix.

EXECUTIVE OVERVIEW

This document delineates the technical and documentation requirements for the Performance Testing of the Discrete Address Beacon System (DABS) engineering models. A description of the principal tasks for the accomplishment of the tests are also provided. The organization responsible for accomplishing each task is identified.

DABS Performance Testing is one phase of the overall DABS test and evaluation program. The Performance Tests will be conducted by the FAA at NAFEC subsequent to the contractor performed Factory Tests and Field Readiness tests.

The purpose of these Performance Tests is to establish technical and functional performance characteristics of DABS in an environment similar to that in which it will operate. Additional FAA testing (not included within the scope of DABS Performance Testing) will determine Intermittent Positive Control (IPC) Performance and DABS/IPC/ATC system operational compatibility.

The test and evaluation program will be concluded with a DABS Field Evaluation and Demonstration wherein the DABS will be used to provide surveillance data to an operational ATC system.

DABS Performance Tests are categorized into Single Site and Multisite Tests. These tests encompass surveillance and communication link performance, failure/recovery mode and capacity/response time performance. Functional reliability and maintainability performance is also included.

Specific test objectives within each of the above stages are delineated. For example: Single Site Surveillance Performance tests include, Position Accuracy, Track Life and Surveillance Link Reliability.

Specific test tasks have been identified in order to clearly define the nature and scope of the test activities. The tasks are: Test Management, Test Planning, Test Facility Engineering, Test Conduct, and Analysis and Evaluation.

The overall management of the DABS Performance Test (to include test requirements and establishment, organizational and technical coordination) and the analysis and evaluation of the test results will be an SRDS responsibility. NAFEC has primary responsibility for the planning, management and utilization of the test facility and for the conduct of the test.

The planning documentation requirements for the DABS Performance Test are defined in this document. The documentation and the organization responsible for providing them are: Test Requirements (SRDS), Work Statements (to be provided by each of the participants), Test Specifications (NAFEC), Test Procedures (NAFEC) and Mission Test Orders (NAFEC). Post test documentation requirements are also defined.

The time available for the accomplishment of the DABS Performance Tests is 15 months commencing with the completion of the single site portion of the Field Readiness Tests on the first sensor, currently scheduled for February 1978. The start and completion dates for Performance Tests conducted at each of the three DABS engineering model sites are also specified in order to permit the remainder of the tests which comprise the DABS test and evaluation program to be scheduled.

TABLE OF CONTENTS

		Page
1.	INTRODUCTION	1-1
1.1	Scope and Purpose of this Document	1-2
1.2	Organization of the Document	1-4
1.3	Goals of DABS Performance Testing	1-4
1.4	Definition of DABS Under Test	1-6
1.4.1	DABS Equipment Configuration	1-7
1.4.1.1	Site 1, NAFEC	1-7
1.4.1.2	Site 2, Elwood	1-8
1.4.1.3	Site 3, Major Airport	1-8
1.4.1.4	Equipment Interconnections	1-9
1.4.1.5	System Test Console	1-9
1.4.1.6	DABS Transponders	1-9
1.4.2	DABS Definition	1-10
1.5	Assumptions and Interrelationships with Other Test Programs	1-13
1.6	General Prerequisites	1-14
2.	DABS PERFORMANCE TEST TECHNICAL REQUIREMENTS	2-1
2.1	DABS Single Site Performance Test Objectives	2-4
2.1.1	Stage S1, Single Site Surveillance Performance	2-5
2.1.2	Stage S2, Single Site Communications Link Performance	2-10
2.1.3	Stage S3, Single Site Failure/ Recovery Mode	2-15
2.1.4	Stage S4, Single Site Capacity/ Response Time	2-16
2.2	DABS Multisite Performance Test Objectives	2-17
2.2.1	Stage M1, Multisite Surveillance Performance	2-18
2.2.2	Stage M2, DABS Multisite Communications Link Performance	2-21

TABLE OF CONTENTS (Cont.)

		Page
2.2.3	Stage M3, Multisite Failure/ Recovery Mode	2-24
2.2.4	Stage M4, Multisite Capacity/ Response Time	2-26
2.3	Functional Reliability and Maintainability	2-27
3.	TEST TASK IDENTIFICATION	3-1
3.1	Test Program Management (Task 1.0)	3-3
3.1.1	Test Coordination (Subtask 1.1)	3-3
3.1.2	Technical Reviews (Subtask 1.2)	3-5
3.1.3	Configuration Management (Subtask 1.3)	3-6
3.2	Test Planning (Task 2.0)	3-6
3.2.1	Requirements for Testing (Subtask 2.1)	3-6
3.2.2	Test Specifications (Subtask 2.2)	3-8
3.2.3	Test Procedures (Subtask 2.3)	3-8
3.2.4	Work/Resource Plans and Schedules (Subtask 2.4)	3-8
3.3	Test Facility Engineering (Task 3.0)	3-9
3.3.1	Hardware (Subtask 3.1)	3-10
3.3.2	Software (Subtask 3.2)	3-10
3.3.3	Voice and Data Communications (Subtask 3.3)	3-12
3.3.4	Maintenance and Calibration (Subtask 3.4)	3-12
3.4	Test Conduct (Task 4.0)	3-12
3.4.1	Mission Coordination (Subtask 4.1)	3-13
3.4.2	Test Bed Management (Subtask 4.2)	3-13
3.4.3	Data Collection (Subtask 4.3)	3-15
3.4.4	Mission Conduct Summary (Subtask 4.4)	3-15
3.4.5	Data Reduction Coordination (Subtask 4.5)	3-16

TABLE OF CONTENTS (Cont.)

		Page
3.5	Analysis and Evaluation (Task 5.0)	3-16
3.5.1	Data Analysis (Subtask 5.1)	3-16
3.5.2	Overall Performance Evaluation (Subtask 5.2)	3-18
4.	TEST DOCUMENTATION	4-1
4.1	Introduction	4-1
4.2	General	4-1
4.3	Pre-Test Documentation	4-5
4.3.1	Requirements for the Performance Testing of the DABS Engineering Models	4-5
4.3.2	Statement of Work	4-6
4.3.3	Test Specifications	4-6
4.3.4	Test Procedures	4-7
4.3.5	Mission Test Orders	4-8
4.4	Post-Test Documentation	4-8
4.4.1	Test Observer Logs	4-8
4.4.2	Mission Summary Reports	4-9
4.4.3	Test Analysis Reports	4-9
4.4.4	Overall Performance Evaluation Reports	4-10
4.4.5	Error Reports	4-10
4.4.6	Change Proposals	4-11
APPENDIX A:	SCHEDULE	A-1

LIST OF ILLUSTRATIONS

		Page
TABLE 1-1	PURPOSE OF EACH DABS TEST PHASE	1-3
TABLE 4-1	PLANNING DOCUMENTS VS. TEST HIERARCHY	4-4
TABLE 4-2	REPORTING DOCUMENTS VS. TEST HIERARCHY	4-4
FIGURE 1-1	DEFINITION OF DABS TO BE TESTED	1-12
FIGURE 3-1	DABS PERFORMANCE TEST TASK STRUCTURE	3-2
FIGURE 3-2	TEST MANAGEMENT TASK STRUCTURE	3-4
FIGURE 3-3	TEST PLANNING TASK STRUCTURE	3-7
FIGURE 3-4	TEST FACILITY ENGINEERING TASK STRUCTURE	3-11
FIGURE 3-5	TEST CONDUCT TASK STRUCTURE	3-14
FIGURE 3-6	ANALYSIS & EVALUATION TASK STRUCTURE	3-17
FIGURE 4-1	TEST DOCUMENTATION FLOW CHART	4-3
FIGURE A-1	TEST STAGE PHASING FOR DABS PERFORMANCE TESTS	A-2

1. INTRODUCTION

The FAA is procuring three Discrete Address Beacon System (DABS) engineering development models, necessary antenna modifications, related interface hardware and connections, avionics equipment (DABS transponders and cockpit displays), and associated ground support facilities and test equipment. The engineering development models will be installed at, and in the vicinity of, the National Aviation Facilities Experimental Center (NAFEC). The three DABS engineering models will be interfaced with the Air Traffic Control (ATC) systems via connections to the System Support Facility (SSF) and the Terminal Automation Test Facility (TATF), both located at NAFEC, simulating, respectively, an en route Air Route Traffic Control Center (ARTCC) and an Automated Radar Traffic Control System (ARTS). An extensive DABS test and evaluation program will be undertaken.

Prior to delivery, each DABS engineering model will undergo Factory Tests conducted at the facilities of the System Development Contractor (SDC). These tests will verify compliance with the DABS Engineering Requirements (ER) at the assembly, subsystem and software level.

After field installation of each DABS engineering model, the SDC will conduct a series of Field Readiness tests. These tests will assure that DABS complies with the ER after installation at each site. As the second and third DABS engineering models are installed, Field Readiness will include verification of the DABS multisensor network. Field Readiness tests will also verify the capability of DABS (both single site and multisite) to interface with the simulated ATC facilities (SSF and TATF) at NAFEC. Field Readiness testing will ensure that the SDC has delivered an acceptable DABS multisensor network.

As the Field Readiness tests on the individual engineering models are completed by the SDC, subsequent tests under the direction of the FAA will be initiated. These tests will be accomplished in discrete phases in both a single sensor and multisensor environment and will encompass: tests to determine the technical and functional performance characteristics of both the DABS and the Intermittent Positive Control (IPC) functions; tests to examine the various system design tradeoffs and experimental interfaces; tests to thoroughly evaluate the DABS/ATC system interactions; and finally an operational evaluation and demonstration of the DABS at an ATC facility. These various tests have been tentatively identified respectively as DABS Performance Tests, IPC Performance Tests, Supplementary Tests, DABS/ATC System Tests, and Field Evaluation and Demonstration tests.

Table 1 summarizes the DABS tests which are currently envisioned along with the purpose of each.

The overall DABS test program will be concluded in early 1980. It will provide for the complete verification of the DABS and IPC design performance and interactions with other systems. Acceptability for ATC utilization will be demonstrated by thorough testing at each stage of implementation, i.e., single sensor, multi-sensor and enhancements in both the terminal and en route environment. The field trials, wherein the DABS will be employed as part of an operational ATC system, will provide the final verification of the DABS prior to initiation of a production program.

It should be noted that during the DABS test and evaluation program any tests with the UG3RD depend upon the extent to which these automation elements have been developed to use the DABS data link.

1.1 Scope and Purpose of this Document

This document covers only the DABS Performance Tests conducted on the engineering models. It provides the System Research and Development Service (SRDS) technical requirements for performance testing by identifying specific DABS Performance Test objectives and the documentation required to support the test program.

TABLE 1-1

PURPOSE OF EACH DABS TEST PHASE

TEST PHASE	PRIMARY PURPOSE
Factory Test	Verify that Major Assemblies and the Software Comply with the Engineering Requirements
Field Readiness Test	Verify Basic System Capability and Insure DABS is Ready for FAA Testing
Performance Test (DABS & IPC)	Evaluate Technical Performance at a Functional Level and Identify Deficiencies
Supplementary Tests	Determine Joint Performance of DABS and Other Developmental Systems (e.g., BCAS)
	Resolve DABS/IPC Related Design Issues
	Optimize Design
ATC System Tests	Establish DABS/IPC/ATC Technical and Operational Compatibility in a Simulated ATC Environment
Field Evaluation & Demonstration	Demonstrate DABS/IPC Acceptability as Part of Operational ATC

The purposes of this document are as follows:

1. Provide specific test objectives and other pertinent information for the development of detailed test specifications and procedures.

2. Identify general test tasks in order to establish an understanding of the relative roles and responsibilities of the participating organizations and their relative interfaces.

3. Identify and describe the data required to plan and document the DABS Performance Tests.

4. Establish broad schedules for the test program.

1.2 Organization of the Document

This document is organized to correspond to the purposes of the DABS Performance Test. Section 1 (this section) provides a broad overview of the DABS Test and Evaluation Program and provides information to put the Performance Test in perspective. Section 2.0 provides specific test objectives and requirements. Section 3.0 identifies the test tasks and 4.0 establishes the documentation requirements. Broad schedule data is provided in the Appendix.

1.3 Goals of DABS Performance Testing

The purpose of the DABS Performance Tests on the engineering development model is to establish the technical and functional performance characteristics of DABS in an environment similar to that in which it will operate. The overall activities and goals of this test program will include:

1. Collecting and analyzing quantitiative data from which the technical performance of DABS can be ascertained at a functional level both in the DABS single sensor and multisensor environments.

2. Evaluating the technical performance of DABS, identifying functional deficiencies, if any, and recommending methods to resolve these deficiencies.

DABS Performance Tests, addressed in this document, are not intended to provide measures of performance relative to the air traffic control operational acceptability (e.g., procedures, human factors). Other test efforts during and after the DABS Performance Test period will address this area. During the Performance test program, however, the technical performance of DABS will be determined under varying conditions, environments and configurations that are possible when DABS is implemented as part of the Air Traffic Control System. It is possible that the objectives of some of the DABS Performance Tests, delineated in this test requirements document, may be met during the Field Readiness testing performed by the System Development Contractor. In these cases suitable DABS Performance Test data collected during Field Readiness Testing may be used as part of the aggregate DABS Performance Test data base. Similarly, data collected during DABS Performance Testing may be used to meet or support data base requirements for other segments of the DABS test and evaluation program.

The DABS Performance Tests will not include subsystem tests such as component tests (e.g., transponder, software, antenna), extensive tests relative to RF performance, or tests to verify compliance with specifications. It is assumed that such subsystem testing has been previously accomplished. However, if unsatisfactory performance is encountered during the DABS Performance Tests, subsystem tests may be necessary to isolate deficiencies. Segments of the DABS Performance Tests may only be repeated after the deficiencies have been corrected and DABS has been verified.

It should be noted, however, prior to and during DABS Performance Testing, specific test objectives may change because of the results obtained through other test efforts (including DABS Performance Tests) or because of modifications that may be made to DABS. The test objectives listed in this document, therefore, should not be construed as total or final. Throughout the DABS Performance Test effort, the possibility exists of modifying and adding tests to meet a particular need.

DABS Performance Testing will fulfill a series of goals which are directed toward establishing the DABS functional and technical performance characteristics relative to the needs of the Air Traffic Control System. The major goals of the tests, therefore, are to collect and analyze the data necessary to evaluate DABS with respect to:

1. Reliable target identification and maintenance of that identification.

2. Reliable, accurate, and timely portrayal of the position and altitude (if reported) of an aircraft, relating particularly to IPC requirements and ATC requirements (e.g., separation standards).

3. Reliable discrimination between proximate targets.

4. Reliable discrimination between target and non-target data.

5. Reliable and timely transmission of data on the DABS communications data link (air and ground link) and the multisite network.

6. Reliable and timely transmission of IPC commands from IPC to aircraft on the DABS data link.

The tests delineated in this document are intended to accomplish these goals by fulfilling a series of directly related test objectives. These specific test objectives appear in Section 2.0.

1.4 Definition of DABS Under Test

The system that will comprise DABS for the purposes of the DABS Performance Test Program is defined in this section. First, however, a brief description is provided of what the DABS equipment configurations at each site location will be.

1.4.1 DABS Equipment Configuration

1.4.1.1 Site 1, NAFEC

The first DABS sensor* to be delivered (Sensor No. 1) will be installed at NAFEC, which is designated Site 1. The sensor will be located at the Radar Beacon Test Facility (RBTF) and collocated with an ASR-7. Initially the DABS sensor will be interfaced with an ASR-7 antenna (nominal 5 second scan rate) modified by the replacement of the feed with one providing combined radar-beacon capability. Sensor No. 1, however, will be capable of being interfaced with other antenna subsystems at the RBTF. Therefore, if during the DABS Performance Test period other antennas become available at NAFEC for testing with DABS, they may be interfaced with the DABS sensor and appropriate tests conducted as part of the Supplementary Tests.

The DABS processor will accept search** reports from an ASR search digitizer, correlate them with the DABS and ATCRBS reports and reinforce the beacon*** reports as appropriate. All beacon reports, reinforced or not, will be transmitted over telephone lines to the SSF and/or TATF. Search reports that do not correlate will also be transmitted.

Three (3) DABS Calibration Performance Monitor Equipment (CPME) units will be installed at FAA-designated locations (i.e., three locations) in the vicinity around the sensor site.

---

* DABS sensor is defined in this document to include all the ground based elements of DABS, including the DABS processor, but excluding the DABS antenna, search antenna and search digitizer. The term "DABS" or "DABS site" refers to all the elements of DABS at a particular site including all of the items excluded in the definition of "DABS sensor".

** Throughout this document the term "search" is used to denote primary radar.

*** Unless otherwise stated, the term "beacon" includes DABS and ATCRBS data.

1.4.1.2 Site 2, Elwood

DABS Sensor No. 2 will be installed at (or near) the present Elwood long range radar site. This site configuration will be different from Site 1 or Site 3. It is anticipated that a separate back-to-back beacon antenna system to interface with Sensor No. 2 will be procured. This antenna configuration will provide a beacon target update interval of approximately five (5) seconds. Sensor No. 2 will accept search targets declared by the Production Common Digitizer (PCD) associated with the ARSR-2 presently located at Elwood. The scan rate of that radar is approximately ten (10) seconds. The DABS processor will correlate the search reports with the DABS and ATCRBS reports and reinforce the beacon reports as appropriate. All beacon reports, reinforced or not, will be transmitted over telephone lines to the SSF and/or TATF at NAFEC. Search reports that do not correlate will also be transmitted.

Three (3) CPME units will also be installed at locations in the vicinity of Elwood.

1.4.1.3 Site 3, Major Airport

DABS Sensor No. 3 will be installed at a major airport (presumably Philadelphia). Equipment to be installed consists of: (1) an ASR-8 antenna with integral search/beacon antenna, (2) an ASR-8 radar, (3) a search digitizer and (4) a DABS sensor interfaced with the ASR-8 antenna and an ASR search digitizer. The antenna scan rate will be a nominal 5 seconds. Again, the DABS processor will attempt to correlate search reports with DABS and ATCRBS reports and transmit correlated and uncorrelated beacon data and uncorrelated search data over telephone lines to the TATF and/or SSF at NAFEC. DABS Sensor No. 3 will contain certain redundant elements not contained in Sensor No. 1 or Sensor No. 2 in order to meet "Design Requirement B" for reliability and maintainability as specified in the DABS Engineering Requirement[1].

Again, three (3) CPME units will be installed at locations around the antenna site.

---

1 Department of Transportation, Federal Aviation Administration, Engineering Requirement, Discrete Address Beacon System (DABS) Sensor, FAA-ER-240-26, Para. 3.9.4.

1.4.1.4 Equipment Interconnections

The DABS sensor may be interconnected in a variety of different ways depending upon the requirements of specific test objectives. The maximum configuration for the engineering development models, however, is as follows:

1. Each DABS sensor will have direct two-way digital data communications, over telephone lines, with every other DABS sensor.

2. Each DABS sensor will have direct two-way digital data communications and one-way (from the sensor) surveillance data transmission capability, over telephone lines, to the TATF (representing a terminal ATC facility) and the SSF (representing an en route ATC facility).

1.4.1.5 System Test Console

One System Test Console (STC) will be procured and located at Site 1. The STC will provide the capability to record all of the circuits described in 1.4.1.4, above. In addition, the STC will permit the manual entry of certain messages on the communication circuits.

1.4.1.6 DABS Transponders

Two types of DABS transponders will be procured and mounted on test aircraft. The DABS Type A transponder is designed for use on general aviation aircraft; twenty (20) will be procured. It is understood that approximately eleven (11) general aviation type aircraft will be equipped with these transponders. The DABS Type B transponder is intended to be representative of a DABS transponder for air carrier use. The Type B transponder will have provisions for antenna diversity operation. Ten (10) Type B DABS transponders will be procured. It is understood that approximately seven (7) aircraft, representing air carrier types, will be equipped with Type B transponders.

1.4.2 DABS Definition

The definition of the system that will comprise DABS during DABS Performance Tests is presented below. All performance measurements and evaluations will be made relative to that system definition or, where appropriate, subsets of that system. The maximum system under test during DABS Performance Testing is delineated as follows:

1. The three DABS sensors and antennas (including the Calibration Performance Monitoring Equipment-CPME).

2. DABS transponder, Type A and Type B.

3. Interfaces between:

   a. The DABS sensors

   b. DABS and ATC (represented by the SSF and TATF). All three DABS sites will be interfaced simultaneously with the SSF and the TATF if the DABS multisensor interface hardware/software is available for the latter.

   c. DABS and DABS transponder equipped aircraft.

   d. DABS and IPC.

   e. DABS and the digitizer at each search radar.

4. ICAO Translator connected between DABS and the SSF and that portion of the Communications Multiplexer Controller and IOP (located at the TATF) which accomplishes the ICAO protocol.

5. The ASR search digitizer and ASR-7 at Site 1 and the search digitizer and ASR-8 at Site 3 to a limited extent. It is assumed that the ASR search digitizer will be fully tested prior to the start of DABS Performance Testing and should not be considered as an element being tested during DABS Performance tests. DABS testing, however, may indicate the need for some ASR search digitizer modifications. Since the ASR search digitizer

will not yet be under configuration control, timely modifications can be effected during the DABS performance test period. For this reason only, the ASR search digitizer is defined partially within the DABS test configuration for the Performance Tests.

The definition of the system under test is illustrated in Figure 1-1. System elements within the dashed lines define what is included in the DABS Performance Tests. Lines crossing the dashed circles show the interfaces included in the definition of DABS. The dashed line goes through the ASR search digitizer for the reasons stated in 5., above, and touches the SSF and TATF to indicate the interfaces discussed in 3 and 4, above, are included.

IPC Performance Tests are not included in DABS Performance Testing. The test and evaluation of the IPC functions will be addressed as a separate effort during IPC Performance Tests. For purposes of test efficiency, however, it is likely that some IPC testing will be conducted concurrently with DABS Performance Testing.

The System Test Console (STC), is not shown as part of the system under test since it is not undergoing performance tests. However, the STC will be delivered and installed at NAFEC with DABS on the same contract and will provide a means of monitoring and recording all data transmitted between DABS/DABS and DABS/ATC.

The Aircraft Reply and Interference Environment Simulator (ARIES) is a simulation device that will be built uniquely for the testing of DABS. A separate ARIES for each of the three DABS sites will be procured. ARIES-to-ARIES communication is required when multisite simulation is performed in order to insure synchronization and consistency (designated SYNC in Figure 1-1) of the traffic sample.

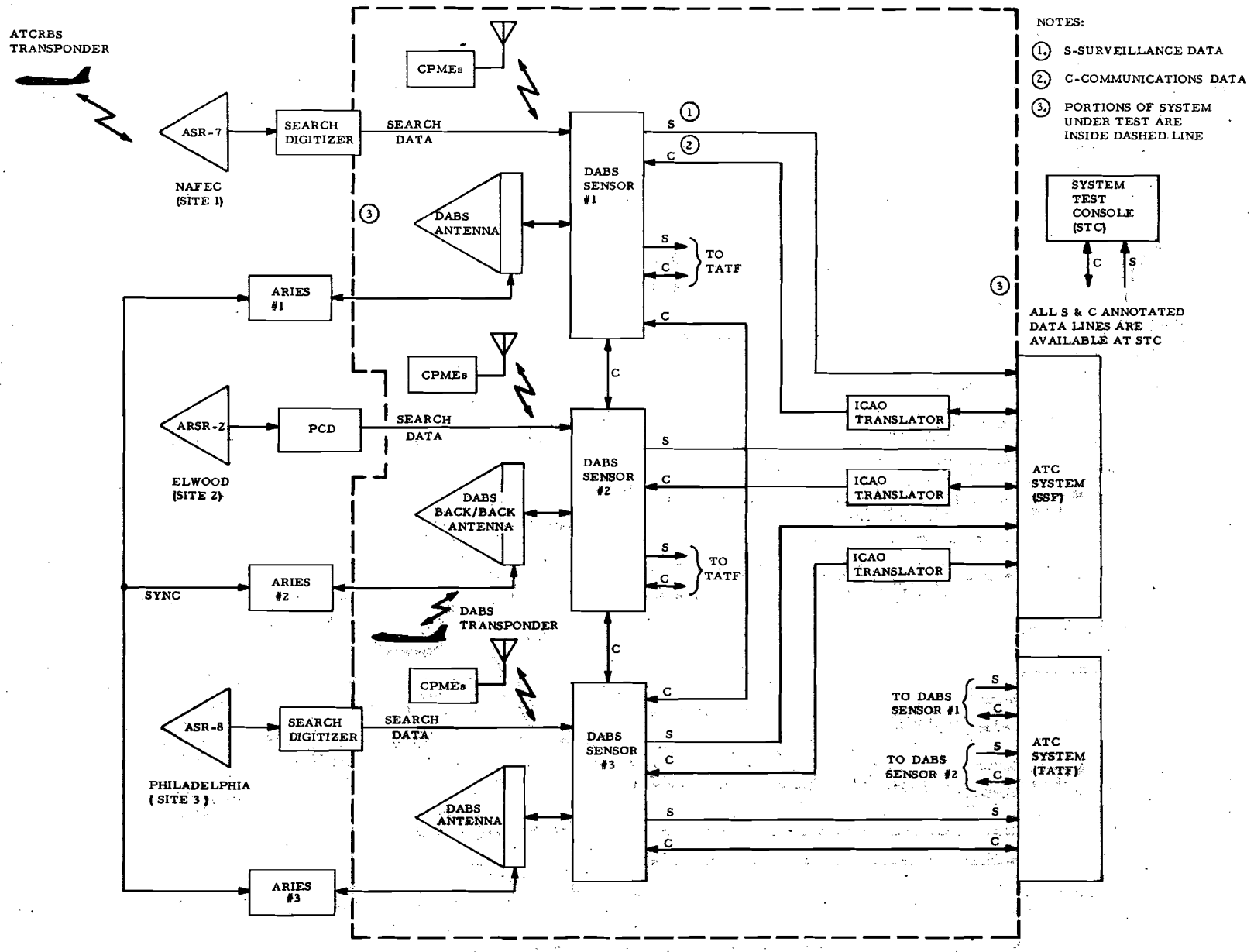

FIGURE 1-1 DEFINITION OF DABS TO BE TESTED

1.5 Assumptions and Interrelationships with Other Test Programs

A set of overall assumptions have been made in order to develop the requirements for DABS Performance Testing. They are:

1. DABS Performance Testing will not begin, in general, until it has been verified that the DABS meets readiness criteria as required in the contract and the system is accepted by the FAA. However, it is possible that some of the DABS Performance Test objectives may be met as part of the Field Readiness tests. For these specific tests, the respective DABS Field Readiness Test data may be acceptable as part of the DABS Performance Test data base.

2. Field Readiness Testing and FAA acceptance of a single site DABS will be complete three (3) months from delivery of the DABS engineering model to its respective site. Field Readiness Testing and FAA acceptance of multisensor DABS will be complete three (3) months after the delivery of DABS Site No. 3 to its location.

3. The amount of time available for DABS Performance Testing will be fifteen (15) months from the time DABS No. 1 has completed Field Readiness Testing (Single Site), has been accepted and is available for subsequent DABS Performance Tests.

4. Other Test Programs - Portions of other DABS related test programs (e.g., IPC Performance Tests, DABS Supplementary Tests, DABS/IPC/ATC Tests) may occur concurrently with portions of DABS Performance Testing. These test efforts will normally be conducted separate from DABS Performance Tests. However there may be cases where commonalities between the test objectives of different test phases or between test mission requirements will occur. In

these cases every effort will be made to conduct the tests jointly such that each test program will meet its specific objectives via common test missions.

1.6 General Prerequisites

Prior to DABS Performance Testing, there are a number of activities which must be completed and the results of these activities known. The following general prerequisites are common to all DABS Performance Tests and should be met prior to initiation of the performance tests:

1. Field Readiness Tests have been completed and each significant interface verified (i.e., DABS, IPC, ASR Search Digitizer, PCD, SSF, TATF and the other DABS) prior to the time required for DABS Performance Testing; satisfactory and reliable performance has been demonstrated; and SRDS has given approval to proceed with DABS Performance Tests. (Note: The interface verification prerequisite does not preclude a single DABS that has successfully completed Field Readiness testing in the single site mode, without interfaces, from being available for a selected set of single site DABS Performance Tests.)

2. The DABS under test and related interfaces have attained and demonstrated sufficient reliability to be available, uninterruptedly, for the duration of each required test mission.

3. Computer programs and hardware (where required) necessary to properly interface DABS (multisite as well as single site) with the SSF and TATF will be available and operating correctly prior to their need in DABS Performance Testing.

4. All special test instrumentation, special equipment, special instrumented test aircraft, recorders, special computer test programs, simulation capabilities, data reduction and analysis programs, and a voice communications system for test are available and have been checked out, verified and approved by the FAA prior to their respective need during DABS Performance Testing.

5. All DABS hardware and software parameter values have been set to best known values.

6. Sufficient FAA support, contractor support, trained test personnel (planning, conduct and analysis) and test aircraft will be available at the times required during the DABS Performance Test program.

7. The performance of the DABS transponder has been verified and approved by the FAA. In addition, performance of the DABS transponder in response to ATCRBS interrogations has been verified to be, at least, equal to the performance of presently available ATCRBS transponders.

8. Installation and acceptance tests (or equivalent) have been performed for the STC and related interconnections prior to the time each is required for DABS Performance Testing and satisfactory and reliable performance has been demonstrated.

9. Each ARIES will be available, as required, on a single site and multisite basis. Each ARIES will be interfaced with the respective DABS sensor, fully checked out, verified and accepted, for both single site and multisite simulations, by the FAA prior to use for DABS Performance Testing at each DABS site.

2. DABS PERFORMANCE TEST TECHNICAL REQUIREMENTS

DABS Performance Testing will be accomplished through a series of test stages commensurate with each site configuration and the installation, integration, and Field Readiness Test schedule of the three DABS engineering models. DABS Performance Tests will be conducted at each DABS site beginning in the single site mode which includes, as necessary, interfaces with the SSF and TATF. As the DABS sensors are integrated with each other and tied to the SSF and TATF, the testing will progressively involve different configurations of multisite DABS with and without connections to the SSF and/or TATF.

Both single site and multisite DABS Performance Tests will be conducted to obtain functional performance characteristics of DABS in the following general areas: surveillance, communications links (air and ground links), failure/recovery mode, capacity/response time, functional reliability and maintainability. To accomplish this the DABS Performance Test effort is divided into a set of test stages. Specifically these test stages are:

1. DABS Single Site Test Stages

    a. Surveillance Performance
    b. Communications Link Performance
    c. Failure/Recovery Mode
    d. Capacity/Response Time Tests

2. DABS Multisite Test Stages

    a. Multisite Surveillance Performance
    b. Multisite Communications Link Performance
    c. Multisite Failure/Recovery Mode
    d. Multisite Capacity/Response Time

3. Functional Reliability and Maintainability

Each stage of testing is divided into a set of tests, each having its own test objective(s). Where it is necessary, for further subclassification, tests are subdivided into subtests. This section provides a list of specific test objectives for each test/subtest. The types of testing and the extent of testing within each of the test stages at each DABS site depends on the particular site configuration, unique air traffic/environmental factors and the availability of a suitable simulation capability (e.g., ARIES) at each site.

DABS Performance Tests will be conducted in both live and simulated environments. The testing will be performed in the live environment (representing actual anticipated operational conditions) to the maximum extent possible. The tests will produce DABS performance results with respect to variables such as target range, azimuth, aircraft attitude, maneuver condition (e.g., straight and level flight, low-turn rate, high turn rate) and transponder type and antenna mounting (e.g., diversity versus nondiversity antenna), critical parameter settings, traffic loads, traffic density, proximity of aircraft, etc.

Since it will not be possible to meet all test objectives in a live-only environment (e.g., capacity/response time testing), simulation or a combination of live and simulation techniques will be used to generate the appropriate test environment for some of these cases. In other cases (e.g., communications link performance) special techniques (e.g., special purpose hardware and/or computer programs) will be required to generate a high volume of data for transmission purposes without sacrificing the factors inherent in live testing.

Although each DABS performance test and subtest (along with its objective) is identified in this document, it is not required that a separate and unique test (test mission) be scheduled and conducted for each individual test/subtest. During

the conduct of the DABS Performance Tests, in order to make efficient use of live mission test time and resources, a number of the tests/subtests will be conducted simultaneously. Each test mission, where possible, will be designed to include the requirements of a number of tests/subtests. The test conditions, test configurations, variables, data collection, etc. for each test mission will encompass what is required for a group of tests/subtests. The data collected during the mission for the group of tests/subtests will be reduced and analyzed with respect to each test/subtest and the computation of the respective DABS performance measures accomplished. Additionally, if appropriate, data useful for DABS performance analysis may be collected from test missions conducted to meet other DABS test and evaluation objectives (e.g., IPC Performance Tests). As mentioned earlier, it is possible that suitable DABS Performance Test data collected during Field Readiness testing may be used to form a part of the overall DABS Performance Test data base.

Although no specific reference is made in the test requirements information that follows in this document, DABS Sensor No. 1 will have the capability to interface with other antenna subsystems at the RBTF. If other suitable antenna subsystems become available at the RBTF for testing with DABS, they may be interfaced with DABS and appropriate tests performed if scheduling and other constraints permit. It is expected that some of these tests will be repeats of tests performed with the modified ASR-7 at Site 1 in order to obtain a comparative evaluation of functional performance.

The remaining sections provide specific test objectives for each stage of DABS Performance Testing. For classification purposes tests will be labeled sequentially, starting with S1-1.0 for the first Single Site test series within Test Stage, S1, and M1-1.0 for the first Multisite test series within Test Stage, M1. Subtests within a designated test are uniquely identified with the number to the right of the decimal (e.g., subtests within Test S1-1.0 are labeled S1-1.1, S1-1.2, etc.).

Section 2.1 provides the test objectives for the DABS Single Site Performance Tests, Section 2.2 provides the test objectives for the DABS Multi-site Performance Tests and Section 2.3 provides the objectives for Functional Reliability and Maintainability.

2.1 DABS Single Site Performance Test Objectives

A DABS Performance test series will be conducted for each DABS sensor. These tests will establish the functional performance characteristics of DABS in a single site environment. The tests will consider the different configurations and environments at each of the sites to determine unique characteristics and to ascertain if any significant differences in performance exist between the sites. For example, Site 2 will have a back-to-back beacon antenna configuration collocated with a single face search antenna in contrast to the modified ASR-7 and ASR-8 antennas that will be provided, respectively, for Site 1 and Site 3. Also, Site 3 will contain sufficient redundancy to achieve a mean time between failures (MTBF) of 20,000 hours, while Sites 1 and 2, although functionally equivalent to Site 3, need to attain only a MTBF of 1,000 hours.

DABS single site performance testing will progress through the following stages of testing after installation and verification of Field Readiness have been completed for a site:

1. Test Stage S1, Single Site Surveillance Performance

2. Test Stage S2, Single Site Communications Link Performance

3. Test Stage S3, Single Site Failure/ Recovery Mode

4. Test Stage S4, Single Site Capacity/ Response Time

2.1.1 Stage S1, Single Site Surveillance Performance

The Single Site Surveillance Performance tests can be conducted on the DABS sensor without SSF, TATF, or other adjacent DABS sensor interfaces. These tests can be started as soon as the site has been readied for DABS Performance Testing (including the integration of search data) and prior to the availability of any of the above interfaces. Selected tests only in the area of surveillance performance will be conducted during this stage.

The test objectives for the DABS Single Site Surveillance Performance tests include the following:

1. Test S1-1.0, Surveillance Accuracy

   a. Subtest S1-1.1, Position Accuracy

      Determine DABS single site relative position accuracy and absolute position accuracy performance characteristics for DABS targets, ATCRBS targets and search-only targets. Determine relative position accuracy, also, with respect to the Cartesian coordinate system used by IPC. Relative position accuracy is a measure of how accurately DABS determines the distance between two proximate aircraft. Absolute position accuracy is a measure of how accurately DABS depicts the location of a target relative to a fixed point on the ground.

b. Subtest S1-1.2, Collimation and Radar/Beacon Correlation

Determine DABS collimation and radar/beacon correlation performance for DABS and ATCRBS targets. Collimation performance will include measures of any range and azimuth collimation errors detected by DABS. Radar/beacon correlation performance will provide measures of the percentage of beacon surveillance messages which are search reinforced.

c. Subtest S1-1.3, ALEC Performance

Determine overall performance of the altitude echo (ALEC) for DABS aircraft. Performance measures will be based on comparisons between the altitude echo transmitted by DABS, the altimeter reading, the altitude in the surveillance message output to ATC, and the altitude transmitted by the DABS transponder.

d. Subtest S1-1.4, CPME

Determine the long term performance characteristics of the Calibration Performance Monitoring Equipment (CPME) with respect to the range and azimuth deviations computed by DABS. Performance measures will be based on the variations, over extended periods of time, of the range and azimuth deviations between each CPME location, as depicted in DABS adaptation, and each respective position resulting from CPME replies.

2. Test S1-2.0, Surveillance Coverage

a. Subtest S1-2.1, Blip Scan

Determine DABS single site blip/scan performance for DABS-only targets, ATCRBS-only targets, DABS targets with collocated search data, ATCRBS targets with collocated search data, and search-only targets. The blip/scan measure is based on the number of surveillance messages generated by DABS per target per scan.

b. Subtest S1-2.2, Lockout

Determine DABS overall single site lockout performance characteristics with respect to ATCRBS lockout and ATCRBS/DABS All-Call lockout. Performance measures will verify, jointly, the DABS software (including adaptation) that issue the lockout commands and the ability of the DABS transponder to react correctly to the lockout commands.

c. Subtest S1-2.3, Track Acquisition/Release

Determine DABS single site track acquisition and release performance for DABS targets and ATCRBS targets. Track acquisition performance is related to the time required to initiate (via ATCRBS/DABS All-Call interrogation) a valid track from the time the target is first in DABS coverage and eligible (as determined by the DABS coverage map) for acquisition. In the case of DABS tracks it is the time required to place the target on roll-call and effect ATCRBS/DABS All-Call Lockout. For ATCRBS tracks, acquisition time is the time required for the ATCRBS track to be designated as mature. Release performance relates to the proper reaction to the DABS coverage map relative to the dropping of tracks. Additionally, for DABS tracks, performance with respect to the unlocking of the DABS transponder to ATCRBS/DABS All-Call interrogations will be included.

3. Test S1-3.0, Track Continuity

a. Subtest S1-3.1, Track Life

Determine single site track life performance for DABS tracks and ATCRBS tracks, both with and without the inclusion of collocated search data, and search (radar substitution) tracks. Determine the incidences of Surveillance File Number (SFN) changes for ATCRBS targets. Track life performance is presented in terms of track drops per unit of time (e.g., hours) for selected subclassification of the data (e.g., turning ATCRBS targets at 75 nm range).

b. Subtest S1-3.2, Track Coast

Determine DABS single site track coast performance for DABS tracks, ATCRBS tracks, and search (radar substitution) tracks. Coast performance for beacon tracks in DABS is determined by the frequency and duration of "coasts" (exclusive of search data). Coast performance for the tracks maintained with radar substitution data is based on the frequency and duration of the tracks not correlating with any surveillance reports.

4. Test S1-4.0, Reliability of Target Identification

a. Subtest S1-4.1, Resolution

Determine DABS performance relative to the resolution between proximate aircraft for DABS/DABS*, DABS/ATCRBS and ATCRBS/ATCRBS targets. Also, determine resolution performance during track acquisition of proximate targets via ATCRBS/DABS All-Call interrogations.

* DABS/DABS means a DABS aircraft compared with a different, proximate DABS aircraft, DABS/ATCRBS means a DABS aircraft compared to an ATCRBS aircraft, etc.

b. Subtest S1-4.2, Track Swap

Determine DABS single site track (SFN) swap performance for ATCRBS tracks, both with and without the inclusion of collocated search data, and determine track swap performance between radar substitution tracks related to both ATCRBS tracks and DABS tracks.

c. Subtest S1-4.3, False Targets

Determine the false target detection characteristics and the overall false target rate for DABS and ATCRBS targets. As appropriate, determine the track initiation incidence on false targets for DABS and ATCRBS targets. Determine the incidences of multiple tracks (multiple SFNs) existing for a single ATCRBS target.

5. Test S1-5.0, Surveillance Quality

a. Subtest S1-5.1, Code Reliability/ Validity

Determine the beacon code reliability and Mode C validity characteristics for DABS and ATCRBS targets. For ATCRBS targets, determine the incidences of beacon code interchange between proximate targets.

b. Subtest S1-5.2, Surveillance Link Reliability

Determine the round reliability characteristics for DABS surveillance-only transmissions. Determine the up-link reliability for DABS surveillance-only interrogations and the down-link reliability for DABS surveillance replies.

c. Subtest S1-5.3, Split Rate

Determine the split rate for ATCRBS targets.

2.1.2 Stage S2, Single Site Communications Link Performance

The Single Site Communications Link Performance tests require DABS interfaces with SSF and TATF in various combinations depending on the particular test objective, with the exception of the DABS/Aircraft and IPC/Aircraft Communication performance tests. These tests (with ATC interface) require DABS input to and proper responses from the respective system with which DABS is interfaced in order to meet test objectives. Therefore, when interfacing with ATC, the test configurations will include the appropriate hardware and software interfaces at the SSF and TATF to provide the necessary ICAO protocol for the communications link.

Since not all interfaces are necessarily required for each test, the tests will be scheduled to conform to the order of interface establishment. For example, after the SSF is interfaced with DABS, performance tests requiring the DABS/SSF interface may be conducted even though a DABS/TATF interface may not yet be ready.

The maximum aircraft load (including peaking) experienced by any one sensor during these tests should not exceed 50% of the aircraft load specified in FAA-ER-240-26 (DABS Sensor), Amendment-3, Section 3.3.2.5, Capacity, but excluding the last paragraph.

Test objectives for the Single Site Communications Link Performance tests include the following:

1. Test S2-1.0, DABS/Aircraft Communications Data Link Performance

   The following test objectives refer to each type of communications message (e.g., Comm A, Comm B, Comm C, Comm D) the DABS Engineering Model is capable of handling.

a. Subtest S2-1.1, Message Error Rate

Determine the up-link and down-link communications message error rate. Observe any incidences of the DABS sensor accepting down-link communications messages containing errors.

b. Subtest S2-1.2, Message Loss Rate

Determine the up-link and down-link communications message loss rate, categorized by cause. A message not correctly received within its expiration time will be categorized as lost. A message misdirected to the wrong aircraft in the same beamwidth will be considered lost. The particulars surrounding any instances of message misdirection will be reported.

c. Subtest S2-1.3, Message Response Time

Determine the response time characteristics for up-link and down-link communications messages (including link round trip time). The basic response time performance characteristics to be determined are the frequency and extent of delays encountered of messages which cannot be delivered successfully while the aircraft is currently in the beam.

d. Subtest S2-1.4, Message Retransmission

Determine the up-link and down-link communications message retransmission rate (number of messages transmitted before receiving a technical acknowledgement).

e. Subtest S2-1.5, Communications Data Link Reliability

Determine the up-link reliability for communications interrogations and the down-link reliability for communications replies (i.e., respectively, the fraction of up-link communications interrogations correctly received by the transponder and the fraction of DABS transponder communications replies correctly received by DABS).

2. Test S2-2.0, IPC/Aircraft Communications Performance

The following test objectives refer to the transmission of communications data between IPC and DABS transponder-equipped aircraft.

a. Subtest S2-2.1, Data Content Error Rate

Observe any incidences of data content errors in messages accepted by the transponder, from IPC, and in messages received by IPC from the aircraft.

b. Subtest S2-2.2, Message Loss Rate

Determine the message loss rate (categorized by cause) for messages transmitted from IPC to aircraft and from aircraft to IPC. Expired messages and misdirected (up-link) messages will be considered lost.

c. Subtest S2-2.3, Response Time

Determine the overall response time characteristics for messages transmitted from IPC to aircraft and from aircraft to IPC. Uplink response time is based on the time an IPC message is readied for delivery by IPC to the time it is correctly received by the transponder. The down-link response time performance characteristics are based on the time the pilot's response in the reply is first sent from the transponder to the time it is correctly received by IPC.

3. Test S2-3.0, DABS/ATC Communications Performance

The following test objectives refer to the communications link between DABS and the SSF/TATF* and they refer to each message type (e.g., Tactical Up-link, ATCRBS ID Code) capable of being transmitted on the respective link.

a. Subtest S2-3.1, Message Error Rate

Determine the message error rate (uncorrectable errors) for messages transmitted from the SSF/TATF to DABS and for messages transmitted from DABS to the SSF/TATF. Observe any incidences of messages containing errors being accepted.

b. Subtest S2-3.2, Message Loss Rate

Determine the message loss rate (categorized by cause) for messages transmitted from the SSF/TATF to DABS and for messages transmitted from DABS to the SSF/TATF. Expired messages will be considered lost.

c. Subtest S2-3.3, Message Response Time

Determine the message response time characteristics for messages transmitted from the SSF/TATF to DABS and for messages transmitted from DABS to the SSF/TATF.

d. Subtest S2-3.4, Message Retransmission

Determine the message retransmission rate for messages transmitted from the SSF/TATF to DABS and for messages transmitted from DABS to the SSF/TATF.

---

* "Communications link between DABS and the SSF/TATF" means the communications link between DABS and the SSF and, separately, the link between DABS and the TATF.

4. Test S2-4.0, ATC/Aircraft Communications Performance

The following test objectives refer to the communications capability (for each type of message the DABS Engineering Model is capable of handling) between the SSF/TATF and DABS transponder-equipped aircraft (e.g., Tactical Uplink, ATCRBS ID Request).

a. Subtest S2-4.1, Data Content Error Rate

Observe any incidences of data content error for messages accepted by the SSF/TATF from aircraft and for messages sent from the SSF/TATF and accepted by the transponder.

b. Subtest S2-4.2, Message Loss Rate

Determine the message loss rate (categorized by cause) for messages transmitted from the SSF/TATF to aircraft and for messages transmitted from aircraft to the SSF/TATF. Expired and misdirected messages will be considered lost.

c. Subtest S2-4.3, Response Time

Determine the overall response time characteristics for messages transmitted from the SSF/TATF to aircraft and for messages transmitted from aircraft to the SSF/TATF. The response time for up-link messages will be based upon the time the message is first transmitted from the SSF/TATF to the time it is correctly received by the DABS transponder addressed. Down-link response time will be based on the time the message is first transmitted from the DABS transponder to the time it is correctly received at the input to the SSF/TATF.

2.1.3 Stage S3, Single Site Failure/Recovery Mode

The Single Site Failure/Recovery Mode test stage will consist of a series of tests designed to evaluate the ability of a single DABS to maintain a continuity of critical functions subsequent to a functional failure. Functional failures are those failures which cause either the complete or partial loss of a functional capability as defined in Section 3.9.2.5.1 of FAA-ER-240-26, (DABS Sensor), Amendment-3. Functional failures will be induced to create various failure modes. Power interrupts for time durations specified in Section 3.9.4 of the DABS Sensor ER will be effected. It will be verified that DABS recovery mode and design capability perform effectively. Performance versus functional failure mode will be assessed for surveillance and communications functions. Additionally, the data collected will support the definition of critical failure modes. The types of tests that will be conducted at each site will depend on the configuration of the site. For example, Site 3 will contain sufficient redundancy to achieve a MTBF of at least 20,000 hours, while Sites 1 and 2 will be subsets (from a reliability standpoint) of Site 3 - but requiring only a MTBF of 1,000 hours. Also, Site 2 will have its search data link between the PCD and ATC connected through the DABS processor, as opposed to the direct PCD/ATC link existing in the present en route system. More detailed specification of functional failure modes will be provided when more detailed design information becomes available.

Prior to the initiation of these tests, a significant base of data relating to DABS surveillance and communication link performance should be accumulated for comparing normal performance with performance during a failure mode.

The test objectives for this test stage include the following:

1. Test S3-1.0, Surveillance Data

Evaluate the performance of a single DABS with respect to maintaining the continuity of surveillance data to ATC and IPC during a functional failure and during (and after) the recovery from the failure; performance criteria to include response times, loss of surveillance data, errors in data and changes to surveillance capacity.

2. Test S3-2.0, Communications Data

Evaluate the performance of a single DABS with respect to maintaining the continuity of communication data between DABS and ATC, DABS and aircraft, ATC and aircraft, IPC and aircraft during a functional failure and during (and after) the recovery from the failure; performance criteria to include message response time, loss of communications data, errors in communications data and changes to communications data handling capacity.

2.1.4 Stage S4, Single Site Capacity/Response Time

Single Site Capacity/Response Time tests will be performed to obtain DABS performance characteristics under varying load conditions, from no load to maximum load. The term "maximum capacity" is used synonymously with "maximum load" in FAA-ER-240-26 (DABS sensor), Amendment-3, Section 3.3.2.5. This document shall use the term "load" to refer to the target induced effects. Both maximum load and aircraft bunching are defined in the referenced ER. Selected performance measures and response time characteristics will be evaluated under various load conditions on DABS. Since maximum load and capacity conditions cannot be achieved with the number of live DABS transponder-equipped test aircraft, this test series will be performed in conjunction with a simulation device such as the ARIES. Additionally the DABS sensor will be sized during this test stage.

The Single Site Capacity/Response time tests should be performed after it has been assured that all DABS interfaces operate properly and that an adequate level of single site surveillance performance and communications link performance has been demonstrated and a base of data has been collected for comparison purposes. This test stage should therefore follow the completion of the single site stand alone performance and communications performance test stages.

The Single Site Capacity/Response Time test objectives include:

1. Test S4-1.0, Surveillance Data Delay Time

   Determine DABS single site surveillance data delay time, data loss and error characteristics for data transmitted to ATC and IPC during varying load conditions incremented from no load to maximum load.

2. Test S4-2.0, Communications Message Response Time

   Determine DABS single site communications message response time, message loss and content error characteristics for messages transmitted between ATC and aircraft, DABS and ATC, and between IPC and aircraft during varying load conditions incremented from no load to maximum load.

3. Test S4-3.0, DABS Sensor Sizing

   Determine DABS sensor compute power utilization and storage utilization under the same load conditions as 1. and 2. above.

2.2 DABS Multisite Performance Test Objectives

A comprehensive series of tests will be conducted to establish the functional performance characteristics of DABS in the environment of two and three DABS sensors. Initially multisite tests will be performed with Sites 1 and 2 only. After Site 3 has completed field readiness testing and has been accepted, it will be included in multisite testing. The tests will consider the interconnection of DABS sensors with differing characteristics, (e.g., effective scan rate). Functional characteristics that can not be tested in a single site environment will be tested during this test series. In addition some functional performance attributes tested in the single site environment will be repeated for aircraft in regions of multisite coverage to enable comparative analyses.

DABS multisite tests will progress through the following stages of testing after at least two sites have undergone installation and checkout, have been interconnected and verification of multisite field readiness has been completed:

1. Test Stage M1, Multisite Surveillance Performance

2. Test Stage M2, Multisite Communications Link Performance

3. Test Stage M3, Multisite Failure/Recovery Mode

4. Test Stage M4, Multisite Capacity/Response Time

2.2.1 Stage M1, Multisite Surveillance Performance

The DABS multisite surveillance performance tests require the integration of two and three DABS sensors and therefore can begin after two DABS sensors have completed interface testing. Testing of the interfaces (e.g., DABS/SSF, DABS/TATF) required for single site tests must also be complete. The test objectives for the DABS multisite performance tests include the following:

1. Test M1-1.0, Multisite Surveillance Accuracy

   a. Subtest M1-1.1, Registration

      Determine DABS registration accuracy performance characteristics for DABS targets and ATCRBS targets. Determine the DABS site-to-site registration accuracy with respect to the Cartesian coordinate system used by IPC. Determine also the position accuracy of surveillance data received via DABS Relay Mode from the unconnected sensor with respect to the connected sensor.

b. Subtest M1-1.2, ALEC Performance

Determine the overall performance of the altitude echo (ALEC) for DABS aircraft in DABS multicoverage areas when the DABS target is in a region of differing pressure correction values (updated and stored in DABS site adaptation) between the DABS sites. Performance measures will be based on comparisons between the altitude echo transmitted by DABS, the altimeter reading, the altitude in the surveillance message output to ATC, and the altitude transmitted by the DABS transponder.

2. Test M1-2.0, Multisite Surveillance Coverage

a. Subtest M1-2.1, Multisite Blip/Scan

Determine DABS effective multisite blip/scan to ATC for DABS-only targets, ATCRBS-only targets, DABS targets with collocated search data and ATCRBS targets with collocated search data and search-only targets detected in DABS multicoverage regions. Determine, also, the blip/scan (to ATC) for DABS and ATCRBS targets considering the use of DABS Relay Mode option.

b. Subtest M1-2.2, Lockout

Determine DABS overall multisite lockout performance in DABS multicoverage regions, with respect to ATCRBS lockout and ATCRBS/DABS All-Call lockout. Performance measures will verify, jointly, the DABS software (including adaptation and network coordination) that issue the lockout commands and the ability of the DABS transponder to react correctly to the lockout commands.

3. Test M1-3.0, Multisite DABS Track Continuity

Determine DABS track life performance characteristics in DABS multicoverage regions for tracked DABS targets, ATCRBS targets, both with and without the inclusion of collocated search data (considering the DABS multisensor data borrowing capabilities), and for search (radar substitution) targets. Determine the concurrent and noncurrent incidences of SFN change for ATCRBS targets simultaneously tracked by two and three DABS sensors.

4. Test M1-4.0, Multisite Identification Reliability

a. Subtest M1-4.1, Track Swap

Determine track swap performance simultaneously for each of the DABS sites supplying coverage to proximate, tracked ATCRBS/ATCRBS targets, both with and without the inclusion of search data, and for proximate search-only (radar substitution) targets related to ATCRBS and DABS targets.

b. Subtest M1-4.2, Multiple SFN's

Determine the concurrent incidences of multiple tracks (multiple SFN's) existing for a single ATCRBS target in a two and three DABS sensor environment.

5. Test M1-5.0, Multisensor Network Coordination

Determine DABS network coordination characteristics relative to hand-off of targets between sites for DABS and ATCRBS tracks in both a two sensor and three sensor environment. Determine the incidences where ATCRBS/DABS All-Call interrogations are necessary to reacquire a track.

2.2.2 Stage M2, DABS Multisite Communications Link Performance

DABS multisite communications link performance tests require the integration of two and three DABS sensors and therefore can begin after two DABS sensors have completed field readiness testing of the DABS/DABS interface. Testing of the interfaces (e.g., DABS/SSF, DABS/TATF) required for single site tests must also be complete for some tests. The maximum aircraft load (including peaking) experienced by any one sensor during these tests should not exceed 50% of the aircraft load specified in FAA-ER-240-26 (DABS Sensor), Amendment-3, Section 3.3.2.5, Capacity, but excluding the last paragraph.

The test objectives for this Test Stage include the following:

1. Test M2-1.0, DABS/DABS Communications Performance

   The following test objectives refer to the communications link between DABS sites and each of the message types the Engineering Models are capable of handling including messages transmitted via the relay mode options.

   a. Subtest M2-1.1, Message Error Rate

      Determine the message error rate (uncorrectable errors) for messages transmitted between DABS sites. Observe any occurrences of acceptance of messages containing errors.

   b. Subtest M2-1.2, Message Loss Rate

      Determine the message loss rate (categorized by cause) for messages transmitted between DABS sites. Messages not transmitted within their expiration time will be considered lost.

c. Subtest M2-1.3, Response Time

Determine the message response time characteristics for messages transmitted between DABS sites.

d. Subtest M2-1.4, Message Retransmission

Determine the message retransmission frequency for messages transmitted between DABS sites.

2. Test M2-2.0, IPC Multilink Communications Performance

The following test objectives refer to the parallel transmission (multilink) of critical IPC messages to an aircraft by an adjacent DABS site:

a. Subtest M2-2.1, Message Data Content Error

Monitor any incidences of message data content errors in any of the IPC messages received by the aircraft and sent from the different DABS sites.

b. Subtest M2-2.2, Message Loss Rate

Determine the overall message loss rate characteristics (categorized by cause) considering multilink transmission. A message will be considered lost if it is not received by the aircraft from any of the DABS sites having responsibility for sending it. Expired messages and misdirected messages will be considered lost.

c. Subtest M2-2.3, Response Time

Determine the overall response time characteristics for the IPC messages transmitted to the aircraft via DABS multilink. Response time is based on the time an IPC message is readied for delivery by IPC to the time it is first correctly received by the transponder from any of the DABS sites.

3. Test M2-3.0, ATC/Aircraft Communications Performance

The following test objectives refer to the capability of the communications (for each type of message the DABS Engineering Model is capable of handling - e.g., Tactical Up-link, Tactical Down-link) between the SSF/TATF and DABS transponder-equipped aircraft in regions of DABS multicoverage. These performance characteristics will be determined for DABS communication messages transmitted both with and without the use of the Data Relay Mode option.

a. Subtest M2-3.1, Data Content Error Rate

Observe any incidences of data content error for messages received by the SSF/TATF from aircraft and for messages received by aircraft from the SSF/TATF.

b. Subtest M2-3.2, Message Loss Rate

Determine the message loss rate (categorized by cause) for messages transmitted from the SSF/TATF to aircraft and for messages transmitted from aircraft to the SSF/TATF. Expired messages and misdirected messages will be considered lost.

c. Subtest M2-3.3, Response Time

Determine the overall response time characteristics for messages transmitted from the SSF/TATF to aircraft and for messages transmitted from aircraft to the SSF/TATF. The response time for up-link messages will be based upon the time the message is first transmitted from the SSF/TATF to the time it is correctly received by the DABS transponder addressed. Down-link response time will be based on the time the message is first transmitted from the DABS transponder to the time it is correctly received at the input to the SSF/TATF.

4. Test M2-4.0, ATC Multilink Communications Performance

The following test objectives refer to the multilink transmission of high priority messages to an aircraft from ATC (SSF/TATF) via two DABS sensors:

a. Subtest M2-4.1, Message Data Content Error

Monitor any incidences of message data content errors in messages received by the aircraft and transmitted from SSF/TATF via DABS multilink.

b. Subtest M2-4.2, Message Loss Rate

Determine the overall message loss rate characteristics (categorized by cause) considering multilink transmission. A message will be considered lost if it is not received by the aircraft from either of the DABS sites having responsibility for sending it to the aircraft. Expired messages and misdirected messages will be considered lost.

c. Subtest M2-4.3, Response Time

Determine the overall response time characteristics for ATC messages transmitted to the aircraft via DABS multilink. Response time is based on the time a message is transmitted by ATC to the time it is first correctly received by the transponder from either of the DABS sites.

2.2.3 Stage M3, Multisite Failure/Recovery Mode

The single site failure/recovery mode tests for evaluating the continuity of functions will be expanded to verify that DABS functions can continue under the failure modes that may be encountered in a multisensor

environment. These failure modes, which will be induced, include the loss of such system elements as the sensor and various communication links. Testing of the Data Relay Mode option will be included. Failure modes will include DABS power interrupts for the time durations (short, long term) specified in Section 3.9.4 of FAA-ER-240-26, each resulting in a different recovery procedure. DABS performance versus failure mode will be determined.

The failure/recovery mode tests will begin after a significant base of multisite surveillance and communications link performance data have been accumulated. This will enable assurance of a reasonable level of DABS multisite performance with which to compare performance during failure/recovery mode.

The test objectives for this Test Stage include the following:

1. Test M3-1.0, Surveillance Data

   Evaluate the performance of multisite DABS with respect to maintaining the continuity of surveillance data to ATC and IPC during the failure modes encountered in a multisensor environment (e.g., sensor failure, link failure) and during (and after) the recovery from the failure; performance criteria to include response times, data loss, surveillance continuity, target reacquisition time, errors in the data, and change in surveillance capacity.

2. Test M3-2.0, Communications Data

   Evaluate the performance of multisite DABS with respect to maintaining the continuity of communications between DABS and ATC, DABS and DABS, DABS and aircraft, ATC and aircraft, and IPC and aircraft during failure modes encountered in a multisensor environment (e.g., sensor failure, link failure) and during (and after) the recovery from the failure; performance criteria to include message response times, communications data loss, errors in communications data and changes to communications data handling capacity.

2.2.4 Stage M4, Multisite Capacity/Response Time

Multisite capacity/response time tests will be performed to obtain DABS performance characteristics at several load levels, up to maximum, in a multisite environment. Additionally, overloading of one DABS site will be tested. Maximum load and aircraft bunching is specified in FAA-ER-240-26 (DABS Sensor), Amendment-3. Section 3.3.2.5. The multisite environment will consist of the maximum test configuration (e.g., all three DABS sites connected to the SSF and three DABS sites connected to the TATF). Performance measures such as surveillance data delay time, message response time characteristics and data loss will be tested in the multisite mode considering the added sensor-to-sensor communication links. Tests will be performed including the use of the Data Relay Mode option. Maximum load conditions, again, will be achieved by simulation and/or a combination of live and simulated inputs. The main thrust of these tests will be centered around Site 1 because of the availability of the STC and other supporting facilities.

The multisite capacity/response time tests must be performed after it is assured that all interfaces operate properly and that an adequate level of multisite surveillance performance and communication link performance has been demonstrated and an adequate base of data has been collected for comparison purposes. This testing therefore should begin near the completion of the DABS multisite surveillance and communications performance test stages. Test objectives for this stage of testing include the following:

1. Test M4-1.0, Surveillance Data Delay Time

   Determine DABS surveillance data delay time and data loss characteristics for data transmitted to ATC and IPC during varying load conditions incremented from light load to maximum load and during the time one DABS site is being overloaded, while the system is connected in the maximum test configuration (i.e., 3 DABS sites connected to SSF, 3 DABS sites connected to TATF).

2. Test M4-2.0, Communications Message Response Time

Determine DABS communications message response time and message loss characteristics for messages transmitted between ATC and aircraft, DABS and ATC, adjacent DABS sites, DABS and aircraft, IPC and aircraft during varying load conditions incremented from light load to maximum load (maximum capacity) and during the time one DABS site is being overloaded, while the system is connected in the maximum test configuration.

2.3 Functional Reliability and Maintainability

Functional reliability and maintainability data will be collected at each of the three DABS sites throughout the DABS Performance Test effort. Data will be collected during the normal (test) operations at each of the three sites. This data collection and analysis effort will be conducted in addition to any reliability/maintainability demonstrations required of the DABS System Development Contractor and will supplement any on-going effort to collect component reliability and maintainability data.

A functional failure is defined as a failure which causes either the complete or partial loss of a DABS functional capability (refer to FAA-ER-240-26, Amendment-3, Section 3.9.2.5.1). Component failures, indicator failures, etc., are not considered functional failures. Failure data will be analyzed for functional failure data in order to arrive at an evaluation of function reliability. Repair and time-to-repair data in response to a functional failures will be analyzed to determine the DABS engineering model characteristics with respect to maintainability.

Data collected at DABS Site 3 will provide information most representative of the early production models of DABS. In accorance with FAA-ER-240-26, Amendment-3, Section 3.9.4, DABS Site 3 is required to meet more stringent reliability requirements than Sites 1 and 2 (i.e., Site 3 will contain sufficient redundancy to achieve a MTBF of 20,000 hours; Sites 1 and 2 are required to attain a MTBF of 1,000 hours). Component failure data should be collected at all sites so that system MTBF may be extrapolated.

3. TEST TASK IDENTIFICATION

This Section identifies and discusses the principal tasks which must be performed in order to accomplish the DABS Performance Testing. These tasks are: Test Management, Test Planning, Test Facility Engineering, Test Conduct and Analysis/Evaluation. The principal participants in the DABS Performance Testing Program are SRDS and NAFEC. Establishment of test program requirements and analysis and evaluation of the test results will be the primary SRDS responsibility while technical support will be provided to SRDS by NAFEC, MITRE, Lincoln Laboratory and the DABS System Development Contractor (SDC). NAFEC has primary responsibility for the planning, management and utilization of the Test Facility and for the conduct of the test. NAFEC is also responsible for coordinating (via SRDS) with Eastern Region (AEA) for the preparation and use of the developmental DABS Site located at or near the Philadelphia International Airport.

Because there are a number of organizational and test phase related interfaces, it is essential that the nature and scope of test activities be clearly defined so that testing may progress in a cohesive, coordinated manner. To achieve this end, the tasks which constitute the overall organization of the test effort are functionally shown in Figure 3-1. The test activity is organized according to the principal generic tasks, (planning, support, conduct, etc.). These tasks are then further subdivided into subtasks. This structure provides a means of defining and identifying the principal tasks that need to be accomplished irrespective of the specific tests (e.g., single site accuracy) or the organizations involved.

The purpose of this section is to provide a means through which all participants in the tests have a common understanding of the general division of responsibilities and the interelationship between them. The test tasks are defined in a manner which relates directly to the testing requirements. It is recognized that the task definition and grouping

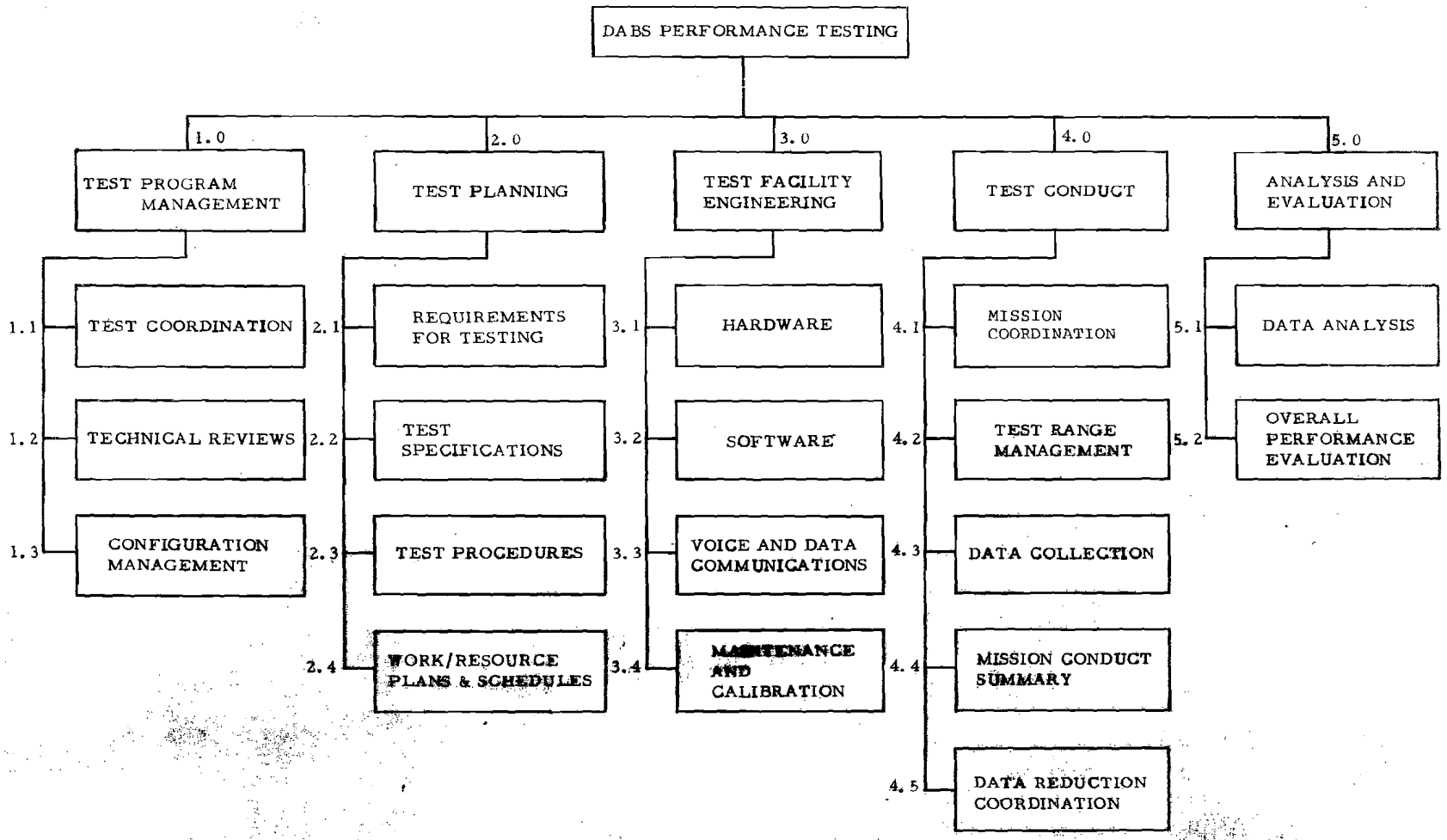

FIGURE 3-1 DABS PERFORMANCE TEST TASK STRUCTURE

may not be aligned with the organizational structure of the individual organization responsible for the task. This situation frequently occurs when multi-disciplined programs are overlaid on existing organizational structures. It is not the intent of this document, however, to suggest or imply the internal structure or methodology used by each organization to perform the tasks but only to insure that the necessary tasks are defined and addressed.

The remainder of this section provides a description of the subtasks which comprise the principal task.

3.1 Test Program Management (Task 1.0)

This principal task encompasses the overall management of the DABS Performance Test, and is the responsibility of SRDS (ARD-210). However, SRDS may charge specific organizations with responsibilities for the subtasks. The subtasks are described below and summarized in Figure 3-2.

3.1.1 Test Coordination (Subtask 1.1)

SRDS will assign a Test Program Manager, who bears the responsibility for the DABS Performance Test Program. His principal responsibility includes the coordination of all elements of the test program. The general manner in which this will be accomplished is indicated by the description of this subtask.

This subtask provides for the coordination of the activities of the various organizations involved in the testing and the coordination required with the DABS Program Manager. The activity insures that elements of the test program are coordinated, and that the information and resources required are made available in a timely manner across all elements of the test program. This subtask includes the administrative and technical coordination of all other principal tasks.

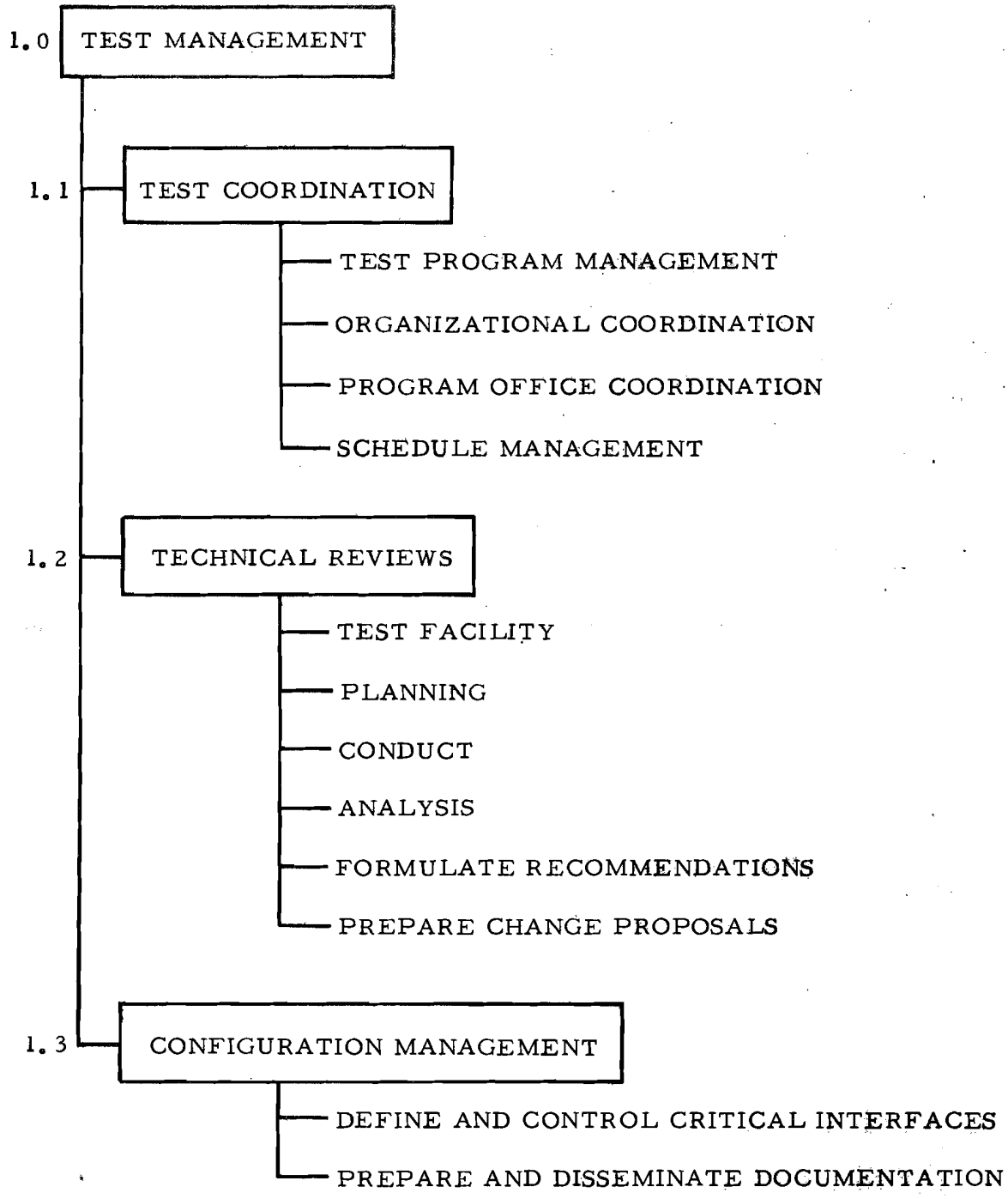

FIGURE 3-2 TEST MANAGEMENT TASK STRUCTURE

This subtask also provides the lead in the detailed definition and maintenance of test schedules. Schedule reviews are conducted periodically and adjustments as required are coordinated with the participants. Schedule updates are disseminated.

It is anticipated that each of the organizations involved in the test activity (e.g., NAFEC, MITRE, Lincoln Laboratory and the SDC) will each designate an individual who will be responsible for coordinating the activities of that organization and for participating in periodic test coordination meetings chaired by the Test Program Manager (SRDS). These test coordination meetings will serve to assure adherence to the approved test plans, and to help identify and resolve potential problem areas.

The initial effort for coordinating the overall test activity will be the establishment of technical and schedule requirements. It is anticipated that organizations requested to assume responsibility for specific tasks, will submit Work Statements to SRDS to indicate the manner by which the requirements will be met.

3.1.2 Technical Reviews (Subtask 1.2)

Within this subtask, reviews of the technical aspects of the principal tasks (Test Facility Engineering, Planning, Conduct and Analysis) are conducted. Technical recommendations, which may be formulated as a result of these reviews, are forwarded to the Test Program Manager for consideration and action. This subtask would be performed by individuals with a broad perspective of the DABS system and test program.

The task will encompass DABS change proposal review, preparation or analysis as appropriate. The impact of these proposals will be analyzed and recommendations regarding implementation will be formulated.

3.1.3 Configuration Management (Subtask 1.3)

The internal interfaces among the various elements of the DABS system and external interfaces between DABS and ATC required for accomplishing the DABS Performance Test will be established as part of the Test Facility Engineering Task (Task 3.0). Baseline configuration definition and implementation of interfaces and the elements which comprise the test bed will be the responsibility of the assigned organizations (e.g., ARD-100 responsibility for DABS/ATC interface definition and implementation). However, when the DABS Performance Testing commences (after the completion of field readiness testing by the SDC and subsequent acceptance by the FAA), the responsibility for the configuration control over all critical test elements is encompassed by this task. A "critical test element" is defined to be any hardware, software or procedural item, (to include system and data reduction/analysis interfaces) which if altered, could impact on the conduct or analysis of the test. All system changes are coordinated and fully documented within this task to assure traceability and test bed integrity.

3.2 Test Planning (Task 2.0)

This principal task encompasses the long range planning which must be accomplished well in advance of the test conduct and the resource planning and scheduling activities. Included are the requirements for the testing program and the test specifications and procedures. Special instrumentation or any simulation provisions which may be required are also identified. The subtasks which comprise this task are illustrated in Figure 3-3 and are described below. With the exceptions of the definition of the Requirements for Testing subtask, which is an SRDS responsibility, the accomplishment of the Test Planning activity is a NAFEC responsibility.

3.2.1 Requirements for Testing (Subtask 2.1)

This subtask will result in the overall definition of the requirements for the DABS Performance Testing. A statement of the test program requirements (this

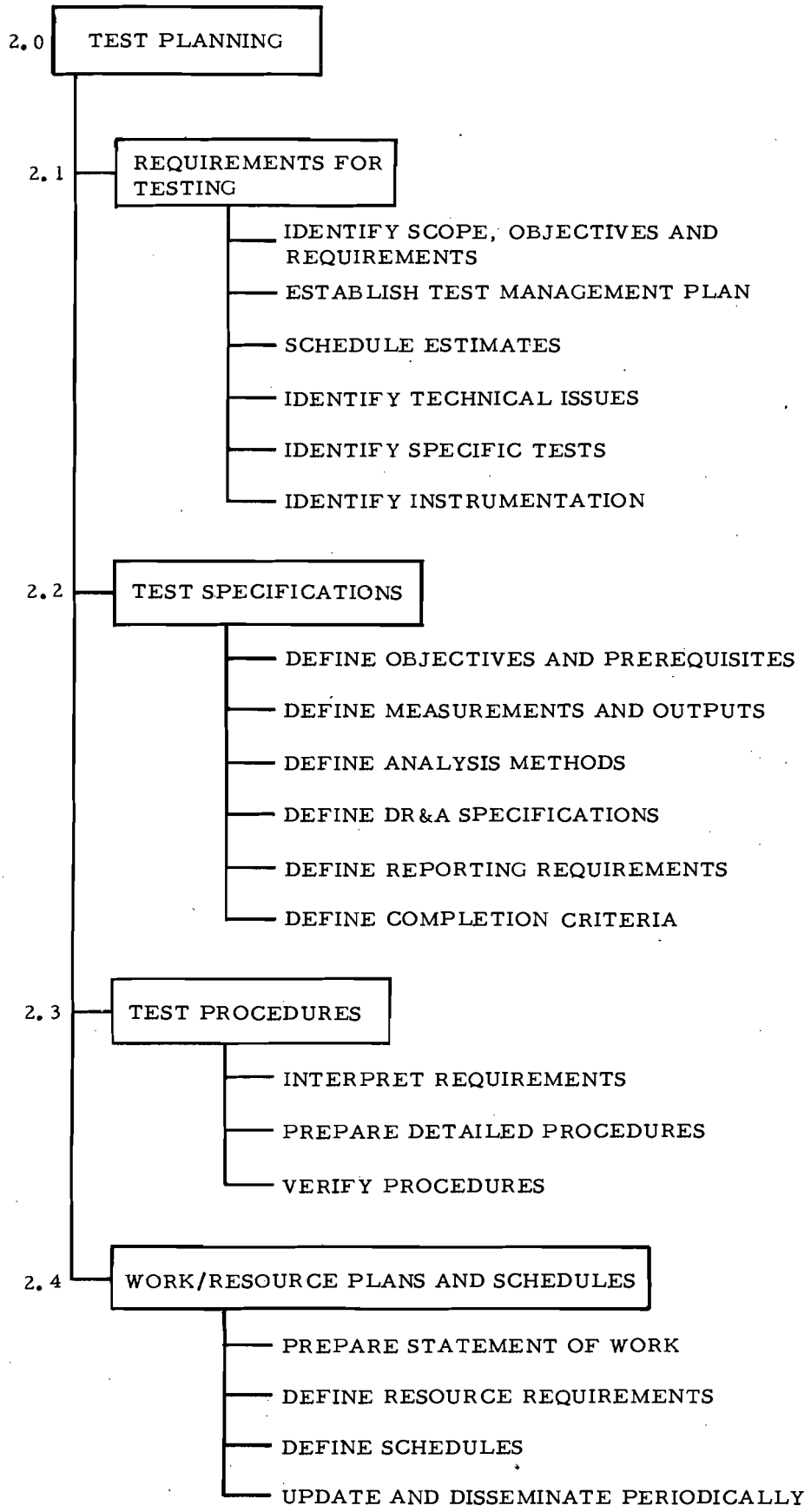

FIGURE 3-3 TEST PLANNING TASK STRUCTURE

document) identifies the necessary DABS technical performance tests and the anticipated overall test schedule. It provides sufficient information so that test specifications may be prepared and planning for instrumentation and support facilities may be conducted under the Test Facility Engineering Task. Information to assist in the planning for resource allocation is provided. The Test Program Requirements will be continuously coordinated with the appropriate organizations to assure completeness in all test areas. It will be updated and amended, as required.

3.2.2 Test Specifications (Subtask 2.2)

This subtask provides for the preparation of specifications which will permit each test to be defined in terms of objectives, prerequisites, data outputs, measurements, analysis methods, completion criteria, and report requirements. The methods for data reduction and subsequent analysis are defined. Where applicable, Data Reduction and Analysis (DR&A) software specifications and instrumentation requirements are prepared.

3.2.3 Test Procedures (Subtask 2.3)

This subtask provides for the preparation of detailed plans for the conduct of each test. The Test Procedure contains all the information needed to actually conduct each test. To the extent necessary the procedures should be verified prior to the conduct of the test.

3.2.4 Work/Resource Plans and Schedules (Subtask 2.4)

This subtask will result in a definitive Statement of Work which will serve to 1) identify the external resources required by NAFEC to accomplish the tasks as identified and assigned in this section and 2) provide a management plan for accomplishing them.

The plan should be in sufficient detail to permit it to serve as a basis for a management evaluation of the progress of the test activity and to highlight potential problem areas throughout the test phases.

This subtask should provide a summary of the long range requirements for all personnel, hardware, software, communications, aircraft and ATC facilities required for the Test Facility Preparation and Conduct phases. A master schedule of these requirements should be developed and maintained through the completion of the Test Program. The interdependencies of the various planning subtasks are considered and the resources appropriately scheduled throughout the program. This detailed scheduling activity will permit proper planning and coordination of resources among all the various organizations who contribute to or use results from the facility preparation and conduct phases.

A schedule of specific Performance Test missions should be developed. A correlation of test objectives and missions should be made. A summary of resources required for each scheduled mission should also be prepared.

The second aspect of this subtask is essentially a short term schedule coordination activity. The master schedule is updated, refined and adjusted as the tests progress. Short term schedules are prepared and promulgated. The resources (personnel, hardware and software) required from each organization involved in the test conduct and analysis are listed and scheduled. The principal elements which require coordination include: the DABS Engineering Models, range and range instrumentation, personnel, communications, aircraft, Eastern Region, SSF, TATF and data reduction facilities.

3.3 Test Facility Engineering (Task 3.0)

This task provides for the planning, installation, integration and checkout of the physical facilities with which the DABS testing will be performed and for the preparation (procurement) and checkout of the software required to interface between the

various elements of the Performance Test. Included in this task is the actual preparation of the additional computer programs and the procedures required to fulfill the Data Reduction and Analysis requirements as specified in the Test Specification. At the completion of the initial phase of this activity the hardware and software resources required for all phases of the DABS Performance Tests will be in place and ready for testing. Since there is a commonality of configurations between this Performance Testing Program and the previous System Development Contractor Field Readiness Tests, coordination with these tests will be required. It is envisioned that most, if not all, of the required hardware and the DABS software will be in place and verified as part of these previous tests; thus, the hardware aspects of the Test Facility Engineering task may become simply a verification of the operational interfaces peculiar to the DABS Performance Tests.

The continuing aspect of this task is the maintenance and calibration of the test bed through the completion of testing. The principal subtasks are illustrated in Figure 3-4 and described below. This task will be clearly the responsibility of NAFEC.

3.3.1 Hardware (Subtask 3.1)

The objective of this subtask is to insure that all of the hardware elements (including support systems and off-line computers) which comprise the test bed and the data reduction capability are in place and operational. All special instrumentation required to meet the test specification, and all hardware interface items will be produced (procured), installed and verified under this subtask.

3.3.2 Software (Subtask 3.2)

The objective of this subtask is to insure that the software, which will permit a complete interface with all of the elements in the test configuration, has been prepared and checked out. Any special software instrumentation that may be required in the SSF or TATF to accept or generate test messages is prepared and verified under this subtask, as well as any simulation capabilities which may be required by the Test Specification.

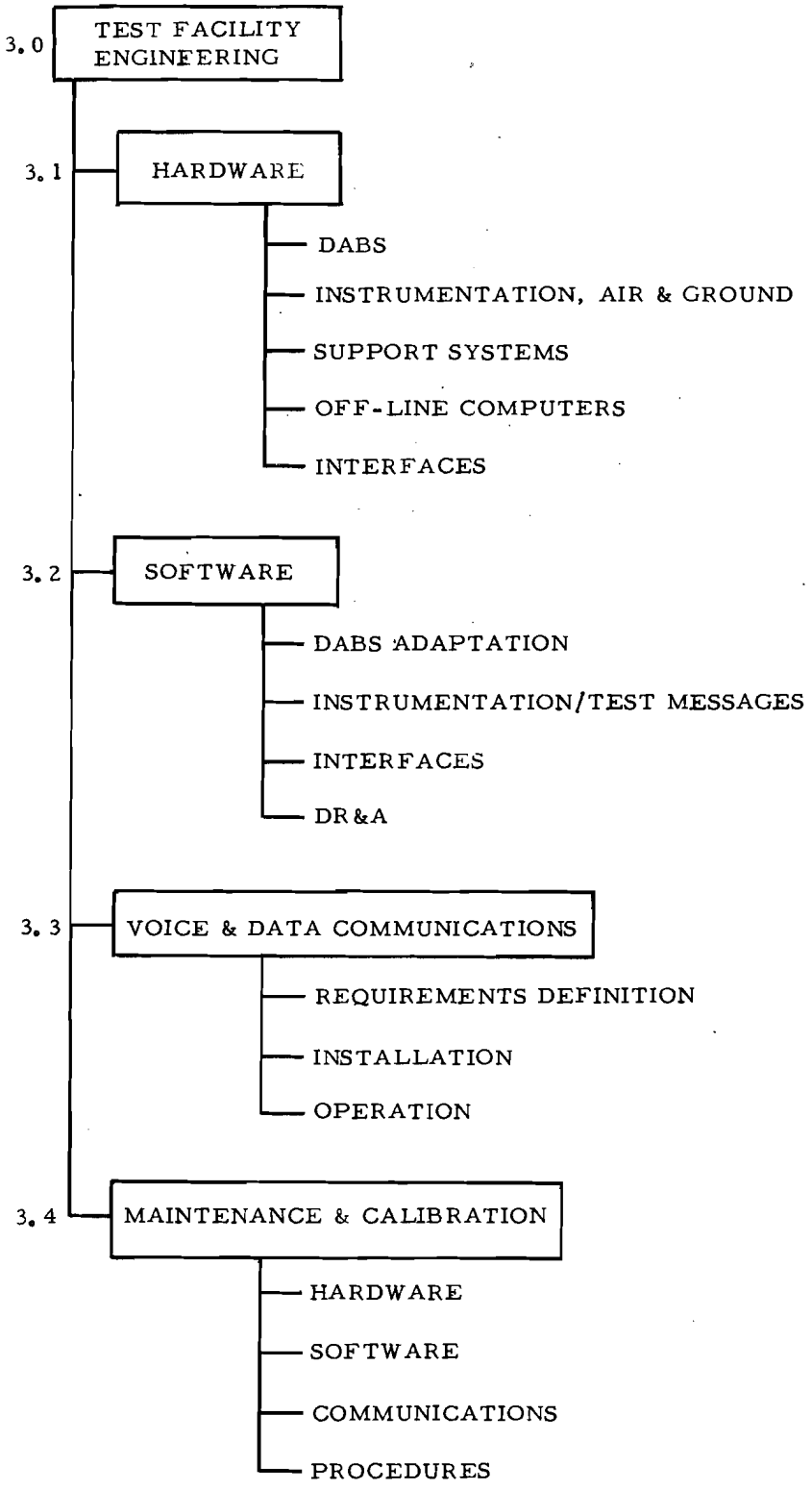

FIGURE 3-4 TEST FACILITY ENGINEERING TASK STRUCTURE

Special site adaptation data may be required for the DABS software to satisfy peculiar test requirements. This subtask requires interpretation of the Test Specifications, definition of the site adaptation requirements, site adaptation preparation and checkout.

DR&A programs which meet the requirements for data analysis as contained in the Test Specifications (Subtask 2.2) are prepared and tested under this subtask. The programs will provide for off-line reduction on either the DABS computer or a general purpose computer. Correlation of test data from several sources is a requirement. Appropriate Data Reduction and Analysis Software previously prepared by the System Development Contractor and by the Lincoln Laboratories must also be integrated in this subtask.

3.3.3 Voice and Data Communications (Subtask 3.3)

The purpose of this subtask is to insure that all of the voice and digital range communication elements are in place and operational and that commitments for leased services are in effect through the test period. Communications interface with all elements of the test bed is verified under this subtask.

3.3.4 Maintenance and Calibration (Subtask 3.4)

This subtask encompasses the requirement that all hardware and software elements used for a particular test meet their specified performance criteria. Procedures must be developed under this subtask to insure that the various organizations responsible for their respective test elements practice the discipline of proper alignment and calibration. It is envisioned that this subtask is principally one of quality control management.

3.4 Test Conduct (Task 4.0)

This task provides for the actual conduct of the test. It includes those activities which immediately precede and follow a specific test. It includes: the coordination and direction of the mission;

control of the test elements; collection, organization and reduction of the data; and the preparation of the Mission Conduct Report. Each of these subtasks are illustrated in Figure 3-5 and are described below in further detail.

The Test Conduct task as defined herein provides for Separate Mission Coordination and Test Bed Management subtasks. The distinction between these two subtasks is based on responsibility for the technical aspects of a specific mission vs responsibility for the readiness and operability of the system test bed on which the mission is to be conducted. It is recognized that, depending on the NAFEC organizational structure, these two responsibilities may be fulfilled by the same individual. However, there may be other instances where this may not be appropriate or practical, e.g., division of responsibilities between mission coordination (or tests) and test bed management could permit a concentration of technical expertise and a parallel application of manpower.

3.4.1 Mission Coordination (Subtask 4.1)

Mission Coordination encompasses the primary responsibility for the specific technical aspect of the mission being conducted. Mission coordination will be accomplished via interpretation and clarification of any ambiguities which may exist in the Test Procedure during a mission. Mission Coordination will be accomplished via the issuance of planning data required to permit a particular mission to be accomplished and via directives (Mission Orders) which coordinate the facility set-up and resources for a specific test on a specific day. The coordination will be accomplished directly with the Test Bed Manager. The Mission Coordinator will conduct briefings (de-briefings) prior to (after) each mission.

When events occur which preclude the fulfillment of the planned mission objective, he will coordinate with the Test Bed Manager to either terminate the mission or redirect the mission objectives, as appropriate.

3.4.2 Test Bed Management (Subtask 4.2)

The principal purpose of this task is to insure that the test bed is configured according to the test plan as modified by the Mission Orders and that the entire test bed is ready at the scheduled time.

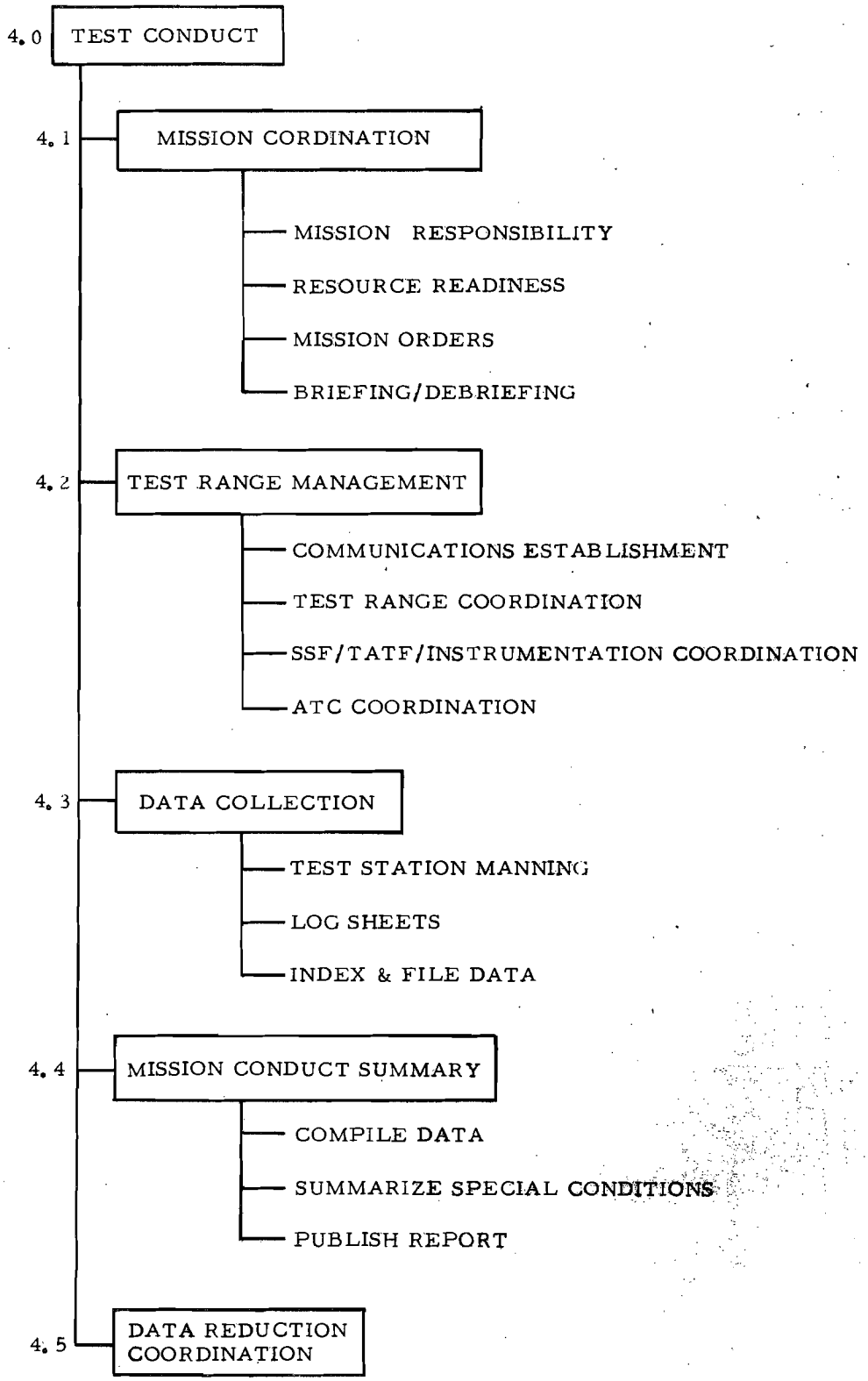

FIGURE 3-5 TEST CONDUCT TASK STRUCTURE

This subtask includes establishing and maintaining voice communications with all elements on the Test Bed involved in the conduct of the tests (e.g., the DABS ground sites, instrumentation sites) and coordinating their activities in the accomplishment of the test objectives.

Other elements used in support of a particular test (such as the TATF, SSF, Test Aircraft, NAFEC test instrumentation) shall, during the conduct of a test, be operationally responsive to the Test Bed Manager.

The Test Bed Management will clearly be the responsibility of NAFEC.

3.4.3 Data Collection (Subtask 4.3)

Data will be output and recorded in several forms, (e.g., logs, magnetic tape, machine output hard copy, manually completed data sheets) and from several sources (e.g., System Test Console, range instrumentation, on-board aircraft recorders). The objectives of this subtask are to fix responsibility for properly recording, collecting, indexing and collating the data and to establish and maintain a filing system.

3.4.4 Mission Conduct Summary (Subtask 4.4)

This subtask includes preparation of a report which provides factual data on each mission. It will be prepared immediately after each mission. It will include test observer logs, post-test debriefing reports and a log of the specific file location of all data collected (under Task 4.3 above). It will provide information on the conditions which existed during the test (actual equipment configuration, deviations from the test procedure, equipment failure data, weather conditions, etc.).

3.4.5 Data Reduction Coordination (Subtask 4.5)

The objective of this subtask is to reduce the data in a format suitable for further analysis. Since the data required to complete several subtests may be gathered in a single mission (conversely several missions may be required to complete a single subtest), it may be required to reduce the same data in several different ways, depending on the objectives of the subtest analysis.

The DR&A programs for this task will have been verified under the Test Facility Engineering task, (Software Subtask, Subtask 3.2). However, any data reduction deficiencies or modifications which became manifest after testing begins will be identified via this subtask in conjunction with the Data Analysis Subtask.

3.5 Analysis and Evaluation (Task 5.0)

The Analysis and Evaluation task provides for analysis and evaluation of the data required to complete various stages of the DABS Performance Tests. The data is analyzed as outlined in the Test Specification. The reports are produced as the various levels of the test hierarchy are completed. Additionally, evaluations will be conducted on the overall DABS performance. Each subtask associated with the Analysis and Evaluation Task is illustrated in Figure 3-6 and is further described below.

3.5.1 Data Analysis (Subtask 5.1)

The objective of this subtask is to analyze the test data and to produce a test analysis report which corresponds to the test level hierarchy. The hierarchy and scope of each analysis report will be specified under the Test Specifications (Subtask 2.2). A single report may cover the results of a single subtest, test or stage depending on the specified hierarchy level. The report will provide formal records of the completion of each phase of testing, serve as a record for later tests and will be source material for the preparation of change proposals.

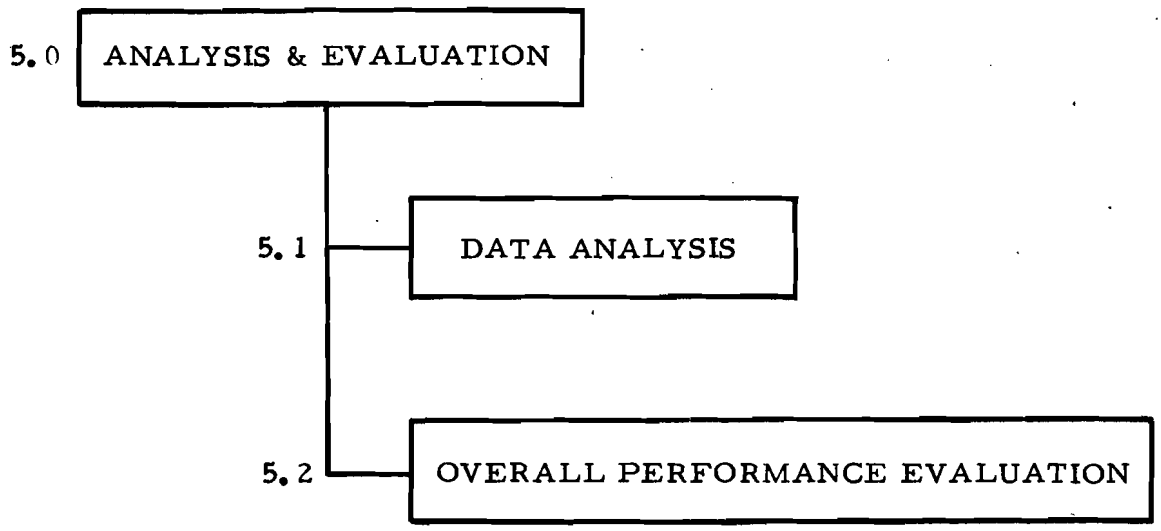

FIGURE 3-6 ANALYSIS AND EVALUATION TASK STRUCTURE

The analysis task should result in recommendations to the Test Program Manager (via Subtask 1.2) regarding the completion status of a given test phase.

3.5.2 Overall Performance Evaluation (Subtask 5.2)

The objective of this subtask is to evaluate the technical performance of DABS at a functional level in both the single sensor and multisensor environments. Evaluation of technical deficiencies, if any, should be made and recommendations for the resolution of these deficiencies should be formulated.

4. TEST DOCUMENTATION

4.1 Introduction

This Section defines the test documentation that will be required to plan, conduct, analyze, and report the DABS Performance Results. The relationships of these documents to each other and to the hierarchy of testing are described.

Each type of document is defined in terms of its purpose, scope, and use. Details of format and content are not given because, especially at the lower levels of documentation, there will be wide variation in the format and content of equivalent documents.

This list of test-associated documents is not intended to be exclusive or restrictive since requirements for documents not specifically called for in this Test Documentation Section may develop as the tests proceed.

4.2 General

This document, "Requirements for the Performance Testing of the DABS Engineering Models" defines the requirements for the entire DABS Performance Test Program. It delineates two major areas of testing: Single Site and Multisite. These two Areas are categorized into Stages (e.g., Single Site Surveillance Performance). The Stages are further divided into Tests (e.g., Surveillance Accuracy) and Subtests (e.g., Position Accuracy). A Test, Subtest, or a group of Tests and/or Subtests will be performed during a particular test Mission. Each test Mission is broken down into a set of Mission Steps. Note that whereas the Tests and Subtests are categorized on the basis of objectives, a single test Mission could serve to meet several objectives and thus fulfill the requirements of several Tests or Subtests.

The Test Documentation Requirements Plan described in this section is structured around the above hierarchy of testing, i.e.,

1. Areas

2. Stages

3. Tests

4. Subtests

5. Missions

6. Mission Step

Pretest planning documentation includes this document plus Test Specifications, Test Procedures and Work Statements. The relationship of these documents to the test hierarchy is depicted in Table 4-1. These planning documents are defined in Section 4.3, along with Mission Test Orders that will be needed for day-to-day planning.

When tests are conducted, the results of each Mission Step will normally be recorded in Test Observer Logs. The results of a complete Mission will be documented in a Mission Summary Report. When an entire test (or subtest if appropriate) has been completed, a Test Analysis Report will be prepared. A Test Analysis Report will also be prepared upon the completion of each Test Stage. An Overall Performance Evaluation (single site and multisite) will be written to cover all of the DABS Performance Tests (single site and multisite) when completed. The relationship of all these reports to the test hierarchy is shown in Table 4-2.

These documents are also defined in Section 4.4, Post-Test Documentation, along with the Error Reports and Change Proposals that may result from DABS performance testing.

Figure 4-1 gives a pictorial representation of the flow of documentation through the DABS Performance Test cycle. The Figure shows that the Requirements for Performance Testing (this document) will be the basis for producing a number of Test Specification documents. The Test Specifications will include the information required to prepare Test Procedures and will provide the requirements for appropriate data to be supplied from allied test programs such as the Factory Test and the Field Readiness Test. Test

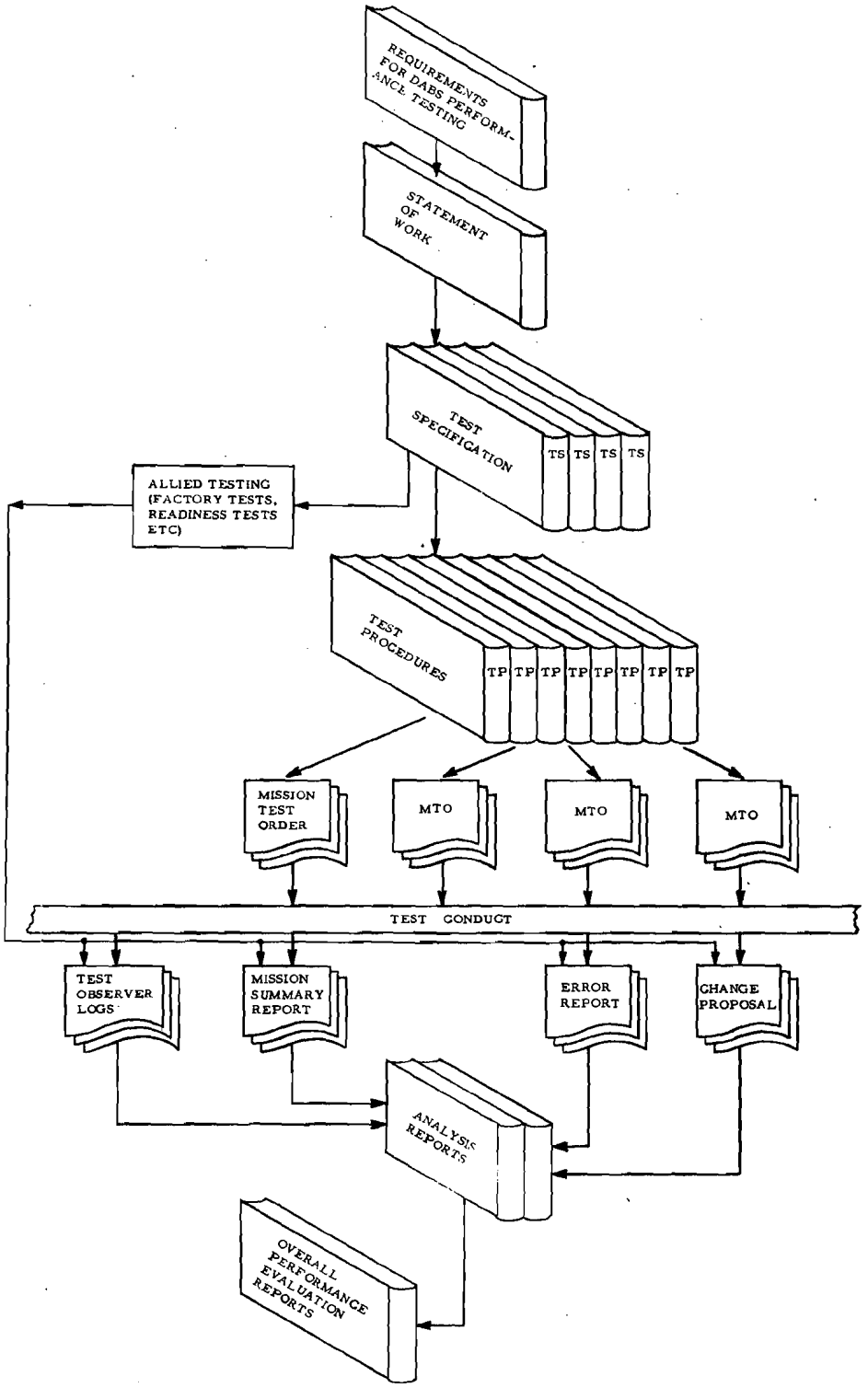

FIGURE 4-1 DABS TEST DOCUMENTATION FLOW CHART

TABLE 4-1. PLANNING DOCUMENTS VS. TEST HIERARCHY

	REQUIREMENTS FOR PERFORMANCE TESTING	STATEMENT OF WORK	TEST SPECIFI-CATIONS	TEST PROCEDURES
AREA	X	X		
STAGE	X			
TEST	X		X	X*
SUBTESTS	X		X	X*
MISSION				X
MISSION STEP				X

* If required.

TABLE 4-2. REPORTING DOCUMENTS VS. TEST HIERARCHY

	OVERALL PERFORMANCE EVALUATION	ANALYSIS REPORT	MISSION SUMMARY	TEST OBSERVER LOG
AREA	X			
STAGE		X		
TEST		X		
SUBTESTS		X*		
MISSION			X	X
MISSION STEP				X

* If required.

Procedures will provide specific details regarding the conduct of the test to include test bed configuration, flight plans, scripts, etc. A Statement of Work will be prepared by each organization assigned major task responsibilities. This document will provide a Management plan and a description of major milestones, products, schedules and external resources required to accomplish the work (e.g., documentation, hardware, commitments, etc.). The preceding documents will be prepared well in advance of test conduct. Mission Test Orders will be prepared on a week-by-week (or even day-by-day) basis to govern the actual conduct of tests.

The raw data (or access to the raw data) from each Mission (which includes the Test Observer Logs and data recording) and the pertinent results from allied tests will be included in a Mission Summary Report. These data will be analyzed, and Test Analysis Reports will be prepared. Error Reports and Change Proposals may be prepared either as a direct result of observations made during test conduct, or as a result of the test analysis activity. An Overall Performance Evaluation Report will be prepared at the conclusion of DABS Performance Testing. This report will provide an evaluation of the technical performance of DABS at a functional level.

4.3 Pre-Test Documentation

4.3.1 Requirements for the Performance Testing of The DABS Engineering Models

The purpose of this document is to establish overall requirements and to provide the conceptual framework for development of the DABS Performance Test Program.

The requirements document defines the test Areas, Stages, Tests and Subtests necessary for DABS Performance Testing. It identifies specific objectives for each subtest and the tasks which must be accomplished in order to conclude the test program. Preliminary identification of the organizations responsible for these tasks is also given. The requirements include scheduled completion dates of major milestones.

It is the basis for preparing test specifications. It will be used to determine test support requirements and will be a basis for allocating resources. The requirements documents will be a focal point for determining the interactions of and need for training, maintenance, facility utilization, and other plans.

4.3.2 Statement of Work

The purpose of the Statement of Work (SOW) is to provide a means for each organization participating in the test program to provide a definitive statement indicating the specific manner in which that organizations will meet its requirements. The SOW also identifies: external organizational interfaces; resources required from external organizations; major and minor milestones and the corresponding scheduled completion date; description and a list of deliverable items; key personnel and responsibilities to indicate the management organization of the test activity. The SOW should provide sufficient detail to permit it to serve as a basis for evaluating the progress of the test activity throughout the test phase and as an additional means of communication among the participants in the test, both external and internal, to the organization preparing the SOW.

4.3.3 Test Specifications

The purpose of the Specifications document is to provide detailed plans for each test stage, down to the Subtest level.

The Test Specification document will define each Test and Subtest (if required) in terms of:

1. Objectives.
2. Prerequisites
3. Test and Subtest conduct and analysis methods
4. Instrumentation, manpower, and support requirements
5. Test and Subtest inputs and outputs

6. Test and Subtest measurements

7. Contingency plans

8. Analysis methods

9. Criteria for completion, and

10. Reporting requirements

The estimates of resource requirements and test conduct time will have been previously provided in the SOW; updates will be used for final planning purposes.

The specifications for the individual tests will be written in sufficient detail to permit an engineer who is familiar with the DABS (hardware and software) to prepare the Test Procesures.

4.3.4 Test Procedures

The purpose of the Test Procedure is to provide detailed plans for the conduct of each test, subtest or mission.

In some cases, data which are required by the Performance Testing Requirements document may be easily derived from other allied DABS tests such as the Factory Tests or the Field Readiness Tests. In these cases, specific test requirements may be coordinated with the organization responsible for the allied testing and the Test Specification covering these tests will be prepared and submitted through SRDS.

Test Procedures will contain all the information that is needed to actually conduct each test. This will include, as required, such detailed test preparation as scripts, flight plans, sample Test Observer Logs, and facility set-up requirements. The length and formality of the Test Procedures may vary depending on the complexity of the tests and the skill and experience level of the test personnel.

4.3.5 Mission Test Orders

The purpose of the Mission Test Order is to direct and coordinate the set-up of the facility and resources (including key personnel) necessary to conduct a specific Test/Subtest (or Tests/Subtests) on a specific day (or days).

Mission Test Orders will list, on a day-to-day and hour-by-hour basis, the Test/Subtest that will be conducted, the configuration of the facility, the test aircraft flight plans, the instrumentation that will be used, and similar information required to make final preparations for test conduct.

Mission Test Orders will be the vehicle for final, detailed scheduling and coordination of all current test activities and the resources involved. They will be prepared as far in advance of test conduct as possible, but in some cases may consist of oral briefings when the situation warrants.

4.4 Post-Test Documentation

4.4.1 Test Observer Logs

The purpose of Test Observer Logs is to record data taken during conduct of a mission.

Test Observer Logs, as required, may be handwritten on specially prepared forms, samples of which may be included in the Test Procedures. They will include such information as displays noted, actions taken, and occurrence of anomalies. They may be incorporated into scripts and in such cases will provide for checking off mission steps as each step is taken, and for noting correct or incorrect system responses.

Test Observer Logs will form part of the raw data for test analysis.

4.4.2 Mission Summary Reports

The purpose of Mission Summary Reports is to serve as a repository for all raw data from a single mission.

Mission Summary Reports will include Test Observer Logs, hard copy printouts, post-test debriefing information, and all other raw data from a single mission. In many cases the volume of data will be too large to practically include in a report (such as all hard copy produced by the system during a four hour test) or impossible to print (such as magnetic tape recordings). In such cases, the Mission Summary Report will name each type of data and give specific information for retrieving it (such as the name of the person who has possession, the specific file drawer, or the tape slot number). Mission Summary Reports will include information on the specific conditions that existed during the mission, problems encountered and brief recommendations for solving or avoiding them (if applicable), necessary deviations from the Test Procedures, exact times at which equipments failed and exact times at which they were replaced and the system returned to an operational status. Mission Summary Reports will not contain test analysis.

Mission Summary Reports will provide access to all the data related to the tests. They will be used in preparation of Test Analysis Reports, Error Reports, and Change Proposals. They will be used as reference material for determining the causes of errors and providing solutions.

4.4.3 Test Analysis Reports

The purpose of Test Analysis Reports is to present the conclusions resulting from a Test or Tests, with supporting analyses and data.

Test Analysis Reports will be formal engineering reports that meet the usual FAA standards for such documents. A single Test Analysis Report may cover the results of a single Subtest (optional), a full Test, or even a complete test Stage. The scope of the Test Analysis Reports required for each test Area will have been specified in the Test Specifications document.

Test Analysis Reports will provide formal records of the completion of a portion of the testing. They will serve as a reference material for later tests, and will be source material for the preparation of Change Proposals and Performance Evaluation Reports.

4.4.4 Overall Performance Evaluation Reports

The purpose of the Overall Performance Evaluation Report is to evaluate the technical performance of the DABS at a functional level in both the single sensor and multisensor environments. Recommendations for improvements and/or the resolution of any technical deficiencies should be made.

The Overall Performance Evaluation Report will be written for the entire (single site and multisite) DABS Performance Test Program. The evaluation report will be based on the various Test Analysis Reports previously conducted. It will serve as the final summary technical report for the DABS Performance Test Program.

4.4.5 Error Reports

The purpose of the Error Report is to document equipment or computer program errors discovered as a result of testing.

One Error Report will be written for each error that is detected. The Error Report will define the error in sufficient detail to permit re-creation of the conditions that cause the error to occur. Error Reports will cite the specific Test in which the error was detected, so that reference can be made to the Mission Report for details of the actual facility configuration, ambient conditions, etc.,

as they existed during the Test. An Error Report may, but generally will not, include a recommended solution of the problem. Error Reports will describe errors in instrumentation and other equipment or computer programs essential to test activities, as well as for errors in the DABS hardware or computer programs.

Error reports will be directed to the Contractor or other organizations responsible for correcting errors, through the DABS Program Management Office, in the relevant equipment or computer program. A priority and an expected date of correction will be assigned to each Error Report to guide the activities of the responsible organization, and to provide a basis for updating test plans and schedules.

4.4.6 Change Proposals

The purpose of a Change Proposal is to propose changes to the specifications of equipments or computer programs.

Each Change Proposal will include a justification of the need for the change (including a description of the problem the change is expected to solve), a discussion of the change and its ramifications, and specific deletions from and changes or additions to the wording of the relevant specifications.

Each approved Change Proposal will be directed through a change proposal screening committee activity to the SDC or other organization responsible for implementing the changes to the relevant equipment interface or computer program. Procedures for the processing of Change Proposals during the DABS Test and Evaluation effort will be established and maintained by the SRDS. A priority and an expected date of completion will be required for each Change Proposal.

APPENDIX A

SCHEDULE

This Appendix provides general guidance on the anticipated scheduling of the DABS Performance Test. The schedule is divided into four segments, one for the single site tests at each of the three sites and one for the multi-site tests.

The relative time allocated for each of the test stages (S1 through S4 and M1 through M4) are approximations. It is anticipated that the organization responsible for these tests will analyze in greater depth the relative duration of each of the stages within a given test segment. However, the start and completion date (expressed in months relative to the completion of single site Field Readiness Tests) are firm dates in that these dates are intertwined with the start-complete dates of other phases of the overall DABS test and evaluation program.

It is anticipated that Single Site Readiness Tests on Site 1 will be completed in mid-February, 1978. Relative to this date, then, the milestone schedule is:

Date	Relative Month	Milestone	Site
Feb '78	0	Start Single Site Performance Test	1
Aug '78	6	Complete Single Site Performance Test	1
May '78	3	Start Single Site Performance Test	2
Oct '78	8	Complete Single Site Performance Test	2
Aug '78	6	Start Single Site Performance Test	3
Nov '78	9	Complete Single Site Performance Test	3
Jan '79	9	Start Multisite Performance Test	1&2
Jan '79	11	Start Multisite Performance Test	All
Mar '79	13	Release from Multisite Performance Tests	3
May '79	15	Complete Multisite Testing	1&2

As noted in Figure A-1 it is anticipated that some overlap with the other test phases will be possible. A discussion of the overlap must be deferred until the phases are more completely defined.

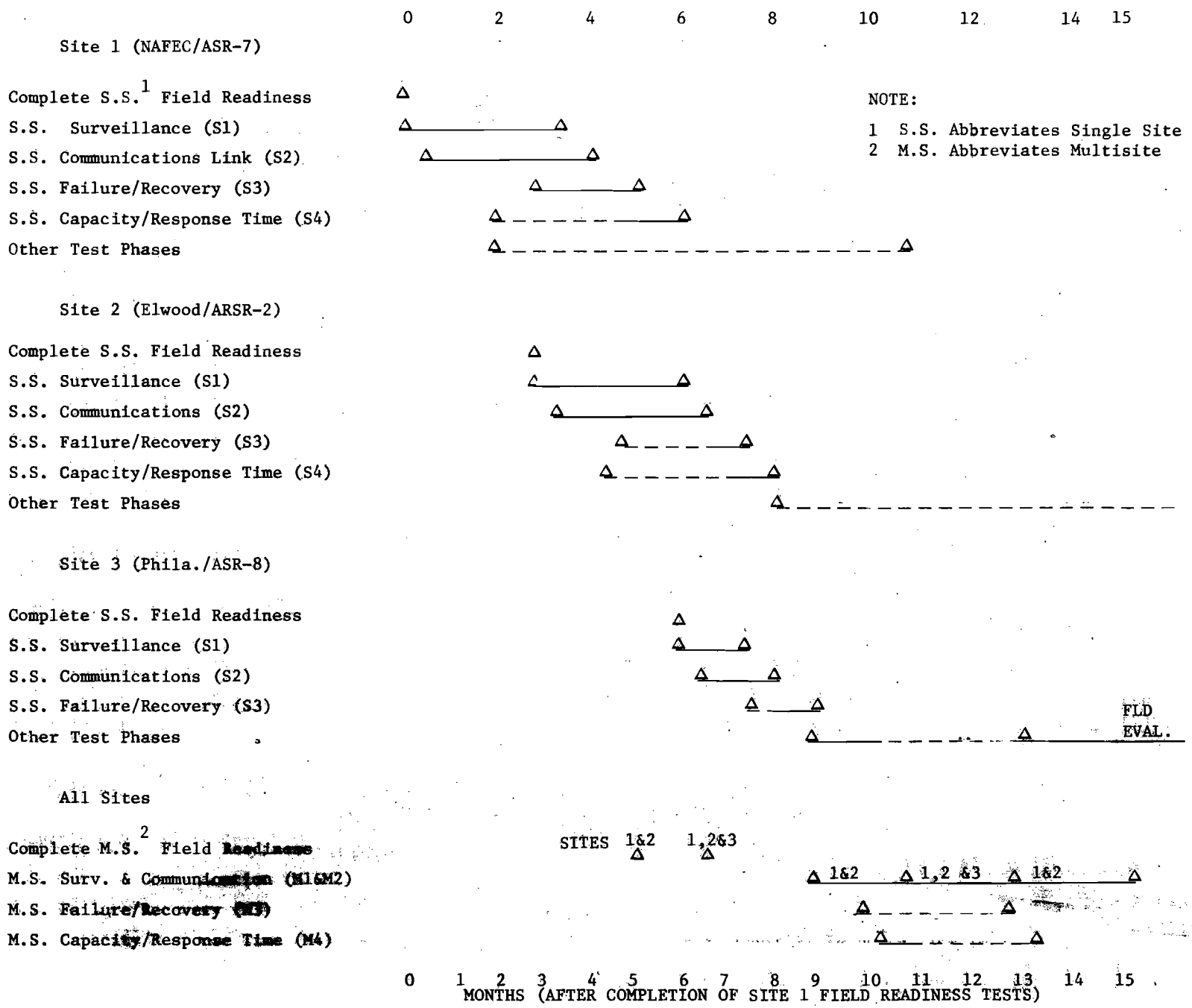

FIGURE A-1 TEST STAGE PHASING FOR DABS PERFORMANCE TESTS

The planning documents discussed in Section 3 should be submitted for review and approval as follows:

Dec. '76	Statement of Work
Apr. '77	Test Specification
Sept.'77	Test Procedures

The Test Reports associated with each of the single site and multisite tests should be completed within 60 days after the completion of testing on the particular single site test or multisite combination.

An overall Performance Evaluation Report should be completed not later than 90 days after the completion of the DABS Performance Tests.

GPO 908-612