COPY 1

FAA-RD-77-109

MICROWAVE LANDING SYSTEM INTRA-AIRCRAFT EMC ANALYSIS

IIT Research Institute
Under Contract to
DEPARTMENT OF DEFENSE
Electromagnetic Compatibility Analysis Center
Annapolis, Maryland 21402

NAFEC
LIBRARY
MAR 30 '78

March 1976

FINAL REPORT

Published April 1978

Document is available to the public through the
National Technical Information Service,
Springfield, Virginia 22161

Prepared for

U.S. DEPARTMENT OF TRANSPORTATION
FEDERAL AVIATION ADMINISTRATION
Systems Research & Development Service
Washington, DC 20590

NOTICE

This document is disseminated under the sponsorship of the Department of Transportation in the interest of information exchange. The United States Government assumes no liability for its contents or use thereof.

TECHNICAL REPORT STANDARD TITLE PAGE

1. Report No. FAA-RD-77-109	2. Government Accession No.	3. Recipient's Catalog No.
4. Title and Subtitle MICROWAVE LANDING SYSTEM INTRA-AIRCRAFT EMC ANALYSIS		5. Report Date March 1976
		6. Performing Organization Code
7. Author(s) Philip E. Gawthrop of IIT Research Institute		8. Performing Organization Report No. ECAC-PR-76-006
9. Performing Organization Name and Address DoD Electromagnetic Compatibility Analysis Center North Severn Annapolis, Maryland 21402		10. Work Unit No.
		11. Contract or Grant No. DOT-FA70WAI-175 Task 29
12. Sponsoring Agency Name and Address U.S. Department of Transportation Federal Aviation Administration Systems Research & Development Service Washington, DC 20591		13. Type of Report and Period Covered Final Report
		14. Sponsoring Agency Code ARD-60

15. Supplementary Notes

Performed for the Spectrum Management Staff, ATC Spectrum Engineering Branch, FAA.

16. Abstract

This report discusses the electromagnetic compatibility of the Time-Reference Scanning-Beam Microwave Landing System (MLS) with other radiating systems on-board nine types of aircraft. These nine aircraft are the McDonnell Douglas DC-10, DC-9, DC-8, Boeing 747, 737, 727, 707, Lockheed Tristar L-1011, and the North American Rockwell T-39 Sabreliner.

This MLS intra-aircraft interference analysis was performed by calculating the interference power level at a receiving antenna, comparing this power with a user-specified interference threshold, and identifying the potential problems.

NOTE: This report considers the TRSB MLS design as it was at the time the study was completed. Since that time a number of design changes have been made and are not addressed in this report.

17. Key Words ELECTROMAGNETIC COMPATIBILITY MLS AVIONICS WEATHER RADAR	18. Distribution Statement Document is available to the public through the National Technical Information Service, Springfield, VA 22161

19. Security Classif. (of this report)	20. Security Classif. (of this page)	21. No. of Pages	22. Price
UNCLASSIFIED	UNCLASSIFIED	46	

Form DOT F 1700.7 (8-69)

PREFACE

The Electromagnetic Compatibility Analysis Center (ECAC) is a Department of Defense facility, established to provide advice and assistance on electromagnetic compatibility matters to the Secretary of Defense, the Joint Chiefs of Staff, the military departments and other DoD components. The Center, located at North Severn, Annapolis, Maryland 21402, is under executive control of the Assistant Secretary of Defense for Communication, Command, Control, and Intelligence and the Chairman, Joint Chiefs of Staff, or their designees, who jointly provide policy guidance, assign projects, and establish priorities. ECAC functions under the direction of the Secretary of the Air Force and the management and technical direction of the Center are provided by military and civil service personnel. The technical operations function is provided through an Air Force sponsored contract with the IIT Research Institute (IITRI).

This report was prepared for the Systems Research and Development Service of the Federal Aviation Administration in accordance with Interagency Agreement DOT-FA70WAI-175, as part of AF Project 649E under Contract F-19628-78-C-0006, by the staff of the IIT Research Institute at the Department of Defense Electromagnetic Compatibility Analysis Center.

To the extent possible, all abbreviations and symbols used in this report are taken from American Standard Y10.19 (1967) "Units Used in Electrical Science and Electrical Engineering" issued by the USA Standards Institute.

Reviewed by:

PHILIP E. GAWTHROP
Project Engineer, IITRI

R. B. WARREN
Assistant Director
Contractor Operations

Approved by:

THOMAS A. ANDERSON
Colonel, USAF
Director

M. A. SKEATH
Deputy Director
Joint Programs

ENGLISH/METRIC CONVERSION FACTORS

LENGTH

From \ To	Cm	m	Km	in	ft	s mi	n mi
Cm	1	0.1	$1x10^{-5}$	0.3937	0.0328	$6.21x10^{-6}$	$5.39x10^{-6}$
m	100	1	0.001	39.37	3.281	0.0006	0.0005
Km	100,000	1000	1	39370	3281	0.6214	0.5395
in	2.540	0.0254	$2.54x10^{-5}$	1	0.0833	$1.58x10^{-5}$	$1.37x10^{-5}$
ft	30.48	0.3048	$3.05x10^{-4}$	12	1	$1.89x10^{-4}$	$1.64x10^{-4}$
S mi	160,900	1609	1.609	63360	5280	1	0.8688
n mi	185,200	1852	1.852	72930	6076	1.151	1

AREA

From \ To	Cm^2	M^2	Km^2	in^2	ft^2	$S\ mi^2$	$n\ mi^2$
Cm^2	1	0.0001	$1x10^{-10}$	0.1550	0.0011	$3.86x10^{-11}$	$5.11x10^{-11}$
m^2	10,000	1	$1x10^{-6}$	1550	10.76	$3.86x10^{-7}$	$5.11x10^{-7}$
Km^2	$1x10^{10}$	$1x10^{6}$	1	$1.55x10^{9}$	$1.08x10^{7}$	0.3861	0.2914
in^2	6.452	0.0006	$6.45x10^{-10}$	1	0.0069	$2.49x10^{-10}$	$1.88x10^{-10}$
ft^2	929.0	0.0929	$9.29x10^{-8}$	144	1	$3.59x10^{-8}$	$2.71x10^{-8}$
$S\ mi^2$	$2.59x10^{10}$	$2.59x10^{6}$	2.590	$4.01x10^{9}$	$2.79x10^{7}$	1	0.7548
$n\ mi^2$	$3.43x10^{10}$	$3.43x10^{6}$	3.432	$5.31x10^{9}$	$3.70x10^{7}$	1.325	1

VOLUME

From \ To	Cm^3	Liter	m^3	in^3	ft^3	yd^3	fl oz	fl pt	fl qt	gal
Cm^2	1	0.001	$1x10^{-6}$	0.0610	$3.53x10^{-5}$	$1.31x10^{-6}$	0.0338	0.0021	0.0010	0.0002
liter	1000	1	0.001	61.02	0.0353	0.0013	33.81	2.113	1.057	0.2642
m^2	$1x10^{6}$	1000	1	61,000	35.31	1.308	33,800	2113	1057	264.2
in^3	16.39	0.0163	$1.64x10^{-5}$	1	0,0006	$2.14x10^{-5}$	0.5541	0.0346	2113	0.0043
ft^3	28,300	28.32	0.0283	1728	1	0.0370	957.5	59.84	0.0173	7.481
yd^3	765,000	764.5	0.7646	46700	27	1	25900	1616	807.9	202.0
fl oz	29.57	0.2957	$2.96x10^{-5}$	1.805	0.0010	$3.87x10^{-5}$	1	0.0625	0.0312	0.0078
fl pt	473.2	0.4732	0.0005	28.88	0.0167	0.0006	16	1	0.5000	0.1250
fl qt	948.4	0.9463	0.0009	57.75	0.0334	0.0012	32	2	1	0.2500
gal	3785	3.785	0.0038	231.0	0.1337	0.0050	128	8	4	1

MASS

From \ To	g	Kg	oz	lb	ton
g	1	0.001	0.0353	0.0022	$1.10x10^{-6}$
Kg	1000	1	35.27	2.205	0.0011
oz	28.35	0.0283	1	0.0625	$3.12x10^{-5}$
lb	453.6	0.4536	16	1	0.0005
ton	907,000	907.2	32,000	2000	1

TEMPERATURE

$^{o}F = 5/9\ (^{o}C - 32)$

$^{o}C = 9/5\ (^{o}F) + 32$

FEDERAL AVIATION ADMINISTRATION
SYSTEMS RESEARCH AND DEVELOPMENT SERVICE
SPECTRUM MANAGEMENT STAFF

STATEMENT OF MISSION

The mission of the Spectrum Management Staff is to assist the Department of State, Office of Telecommunications Policy, and the Federal Communications Commission in assuring the FAA's and the nation's aviation interests with sufficient protected electromagnetic telecommunications resources throughout the world to provide for the safe conduct of aeronautical flight by fostering effective and efficient use of a natural resource--the electromagnetic radio-frequency spectrum.

This objective is achieved through the following services:

- Planning and defending the acquisition and retention of sufficient radio-frequency spectrum to support the aeronautical interests of the nation, at home and abroad, and spectrum standardization for the world's aviation community.

- Providing research, analysis, engineering, and evaluation in the development of spectrum related policy, planning, standards, criteria, measurement equipment, and measurement techniques.

- Conducting electromagnetic compatibility analyses to determine intra/inter-system viability and design parameters, to assure certification of adequate spectrum to support system operational use and projected growth patterns, to defend the aeronautical services spectrum from encroachment by others, and to provide for the efficient use of the aeronautical spectrum.

- Developing automated frequency-selection computer programs/routines to provide frequency planning, frequency assignment, and spectrum analysis capabilities in the spectrum supporting the National Airspace System.

- Providing spectrum management consultation, assistance, and guidance to all aviation interests, users, and providers of equipment and services, both national and international.

EXECUTIVE SUMMARY

The Federal Aviation Administration (FAA) is developing a precision approach-and-landing guidance system called the Time-Reference Scanning-Beam Microwave Landing System (MLS). The avionics for this system, which operates in the 5.0-5.25 GHz band, will be installed on many civilian and military aircraft by the 1980's. An analysis was performed to determine what, if any, equipments on existing aircraft would cause interference to (or receive interference from) the MLS.

Interactions were examined for nine aircraft specified by the FAA (McDonnell Douglas DC-10, DC-9, DC-8, the Boeing 747, 737, 727, 707, the Lockheed Tristar L-1011, and the T-39 Sabreliner) to determine the interference potential between the MLS and the weather radars, long-range radio altimeters, Doppler radars, DME or TACAN interrogators, and secondary-surveillance-radar interrogators and transponders.

In the initial phase of the analysis, an automated prediction model was employed. For each interaction, the interference power level at the receiver antenna was compared with a user-specified interference threshold, to determine whether the likelihood for interference exists. A potentially severe interference problem was predicted between the weather radars and the MLS, if the MLS horn antenna is mounted near the weather radar antenna on the aircraft nose bulkhead as planned.

If the existing C-band (5370-5430 MHz) weather radars are retained and the MLS antennas are to be installed on the nose of the aircraft, there is a high probability of interference to the MLS that will cause it to lose tracking ability. This interference potential could be reduced if the MLS antenna is located more rearward on the bottom of the airframe. Replacement of the onboard weather radar with one operating in another frequency band would also reduce the interference potential.

TABLE OF CONTENTS

Subsection	Page
SECTION 1	
INTRODUCTION	
BACKGROUND	1
OBJECTIVE	1
APPROACH	1
SECTION 2	
ANALYSIS	
BASIC MLS SYSTEM OPERATION	3
ANALYSIS MODEL	6
Frequency-Dependent-Rejection Losses	12
Propagation Path Loss, L_p	13
PARAMETERS DEFINITION	17
Antenna Locations	17
Characteristics of Equipment	18
INITIAL RESULTS	27
NEAR-FIELD CONDITION ANALYSIS	30
Received Power Calculation	30
Effect on MLS Performance	33
SECTION 3	
CONCLUSIONS	35

LIST OF ILLUSTRATIONS

Figure		
1	Ground subsystem angle-guidance coverage	4
2	Calculated bounds of emission spectrum of MLS-DME A/G transmitter	8
3	MLS-DME receiver selectivity curve	9
4	MLS angle-data receiver selectivity curve	10
5	Sideview of a representative aircraft showing the conical and cylindrical body shapes as well as the loss types as calculated by AVPAK	14
6	Curvature factor, F(y) versus y (from Reference 2)	16
7	Coordinate system for locating antennas	19
8	Antenna geometry within radome for worst-case interference	31
9	Vertical antenna pattern for a waveguide horn antenna at 5047 MHz (from Reference 7)	32

TABLE OF CONTENTS (Continued)

LIST OF TABLES

Table		Page
1	MLS TRANSMITTER CHARACTERISTICS	7
2	MLS RECEIVER CHARACTERISTICS	7
3	AIRCRAFT DIMENSIONS OF CONCERN	19
4	EQUIPMENT FUNCTION AND ANTENNA LOCATIONS	20
5	TRANSMITTER CHARACTERISTICS	23
6	ASSUMED HARMONIC-SUPPRESSION LEVELS	24
7	RECEIVER CHARACTERISTICS	25
8	INTERFERING POWER LEVELS IN RELATION TO RECEIVER SENSITIVITY FOR PRIMARY FREQUENCY PLAN	28
9	CALCULATED DESIRED-SIGNAL LEVELS, LOSSES, AND RATIOS	34

GLOSSARY OF ACRONYMS AND ABBREVIATIONS 37

REFERENCES 38

SECTION 1

INTRODUCTION

BACKGROUND

The Federal Aviation Administration (FAA) is developing a precision approach and landing guidance system for future use. The Time Reference Scanning Beam (TRSB) system represents the United States proposed Microwave Landing System (MLS) candidate to the International Civil Aviation Organization (ICAO) as the international successor to ILS. The FAA has tasked the DoD Electromagnetic Compatibility Analysis Center (ECAC) to analyze the potential for intra-aircraft interference between the MLS and other on-board equipment for specified aircraft.[1]

OBJECTIVE

The objective of this analysis was to determine the potential for interference between the proposed airborne MLS equipment and existing in-band and adjacent-band equipments operating on the same aircraft.

APPROACH

Nine aircraft types were specified by the FAA as representative of those aircraft that would be equipped with the MLS.

Equipment complements on board these representative aircraft were determined through a search of the ECAC data files for equipments that operate in the same frequency band as the MLS (5.0-5.25 GHz), in adjacent-frequency bands, or in harmonically related bands. The large number of nomenclatures thus located was reduced to a list of representative equipments having the widest selectivity and/or emission bandwidths and highest output powers in those frequency bands indicated.

Interference-signal power levels at each receiving antenna were predicted, based upon antenna location and system characteristics. Antenna gain and path loss along the airframe were included in the computations, along with the frequency-dependent factors of the emission spectrum and the receiver selectivity.

---

[1]Interagency Agreement, DOT-FA70WAI-175, Task Assignment No. 29.

The interfering power levels were compared with a user-specified degradation threshold and potential problem cases were identified.

Where a receiver is tunable over a frequency range that overlaps the interfering transmitter operating frequency, calculations were made for the on-tune case. This assured consideration of the situation most likely to produce interference.

The initial estimates of coupled power density were confirmed with computations that included the effects of near-field conditions present between the weather radar and MLS antenna.

SECTION 2

ANALYSIS

BASIC MLS SYSTEM OPERATION

The Microwave Landing System is comprised of a ground-based angle-data transmitter, an airborne angle-data receiver/processor, and associated distance measuring equipment (DME). The antenna associated with the airborne MLS is located in the nose section of the aircraft. For *missed-approach* angle-data received signals, another antenna is located on the tail section of the aircraft.

The guidance information provided to the pilot by each system is the angular direction and magnitude of deviation between the position of an approaching aircraft and the desired runway-approach path.

With respect to each runway, there exists a volume of air-space in which the aircraft is to receive azimuth and elevation guidance signals with no interference from any source, including other landing systems. Figure 1 illustrates the coverage volume.[2] This volume is defined by an angle above and below the glidepath, and angle left and right of the runway center line, and some maximum range from the runway (20 nmi). The elevation coverage of not more than 20,000 feet is bound by the maximum elevation angle from the horizontal.

The desired path, called the glidepath, is normally defined by the extension of the runway axis at a constant vertical angle from the horizontal. The pilot receives elevation-deviation indications that tell him to *fly down* or *fly up*, depending on the instantaneous elevation relationship between the aircraft and the glidepath. Similarly, azimuthal deviation indications tell the pilot to *fly left* or *fly right*.

The MLS also provides missed-approach guidance. The missed-approach coverage volume is opposite in direction to that of the approach-coverage volume and is defined in exactly the same terms. Normally, it is not as large as the approach-coverage volume. Compatible operation is also required in missed-approach coverage volumes.

---

[2]Department of Transportation, Federal Aviation Administration, *Time Reference Scanning Beam Microwave Landing System: A New Non-visual Precision Approach and Landing Guidance System for International Civil Aviation*, Washington, DC, December 1975.

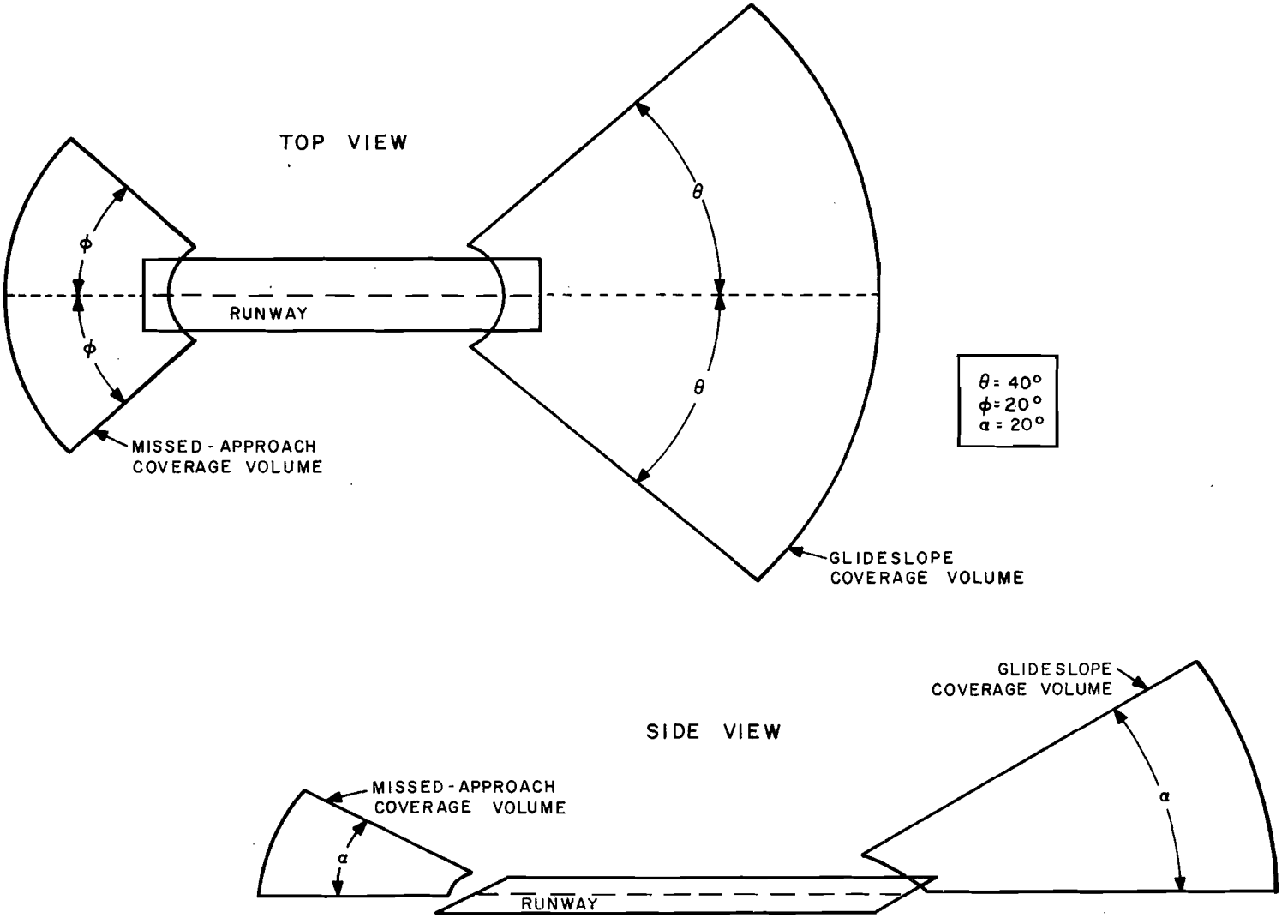

Figure 1. Ground subsystem angle-guidance coverage.

DME provides the pilot with the slant range from the aircraft to the touchdown point on the runway. The DME system will utilize the standard, 2-way, airborne-interrogation and ground-based beacon-reply technique. The previously defined coverage volume is also required for compatible DME operation.

The frequency bands being considered for the MLS-DME are in the C-Band (5067.9-5187.6 MHz) and the L-Band (962-1215 MHz). This analysis, however, deals only with the 5000-5250 MHz (C-Band) MLS frequencies.

Frequencies of operation for the angle-data receiver and the DME transceiver are:

Angle-data receiver	5001.0-5060.7 MHz
DME ground-to-air	5067.9-5127.6 MHz
DME air-to-ground	5127.9-5187.6 MHz

Two C-Band frequency plans are being considered for the MLS: (1) the primary frequencies as listed above, and (2) an alternate plan, with frequencies translated up 30 MHz from the primary frequencies. This analysis deals with the primary frequencies, although the alternate frequencies are briefly discussed with respect to interference potential.

The proposed location of the MLS horn antenna is on or near the forward side of the bulkhead within the nose section of the aircraft. This antenna serves three functions: (1) to receive angle-data information, (2) to receive slant-range information, and (3) to transmit DME interrogator signals.

The MLS system has a missed-approach antenna located atop the vertical stabilizer of the aircraft. This antenna is vertically polarized (as are all MLS antennas) and was assumed to be a blade mounted vertically atop the stabilizer.

A conservative estimated value of 23 dB was used for the signal-to-interference threshold for the angle-data receiver throughout the model analysis. An estimated value of 3 dB was assumed for the signal-to-interference threshold for the MLS-DME. These are the same values that were employed in the MLS channel-assignment scheme.[3]

---

[3]Frazier, R. F., *In-Band Compatibility Analysis of the RTCA Proposed Microwave Landing Guidance System (LGS) and Candidate Interim System*, FAA-RD-72-62, ECAC, Annapolis, MD, July 1973.

The MLS equipment characteristics used in this analysis are listed in TABLES 1 and 2. The MLS DME A/G transmitter emission spectrum and the MLS-DME-G/A and MLS angle-data-receiver selectivity curves are presented as Figures 2, 3, and 4 respectively.

ANALYSIS MODEL

An automated analysis model, AVPAK, is used for assessing the electromagnetic compatibility of equipment in an intra-aircraft environment.[4] The model compares the interference power levels at the receiving antennas with user-specified degradation thresholds for each receiver. Interference situations are handled from a worst-case point of view. Thus, if a receiver is tunable over a certain frequency range and the interfering transmitter operates (or could operate) at a frequency in that range, calculations are made for the on-tune interaction. Any other approach would overlook the situation most likely to produce interference.

The general equation for determining the interfering power at a potential victim receiver, in logarithmic form, is:

$$P_R = P_T + G_T + G_R - L_P \qquad (1)$$

where

P_R = interfering power level at the receiver, dBm

P_T = power of the interfering transmitter, dBm

G_T = transmitter antenna gain, dBi

G_R = receiver antenna gain, dBi

L_P = coupling loss between transmitting and receiving antennas, dB.

Allowing for the frequency-dependent rejection of the transmitter signal by the receiver, the effective input interfering signal level becomes:

$$I = P_T + G_T + G_R - L_P + FDR \qquad (2)$$

[4]Friske, L. C., *An Extended Avionics Interference Prediction Model*, FAA-RD-73-9, ECAC, Annapolis, MD, June 1973.

TABLE 1

MLS TRANSMITTER CHARACTERISTICS

Equipment Nomenclature	Tuning Range Frequency (MHz)	BWP1 (kHz)	BWP2 (kHz)	SLFO1 (dB/dec)	SLFO2 (dB/dec)	PT (dBm)	MT	PW (μsec)	PRT (μsec)
MLS-DME-A/G	5127.9-5187.6	1,000	4,320	20	40	57.8	PO	0.67	0.2

Notes: BWP1 = Bandwidth at first breakpoints of a transmitter two-slope emission spectrum.

BWP2 = Bandwidth at second breakpoints of a transmitter two-slope emission spectrum.

SLFO1 = First slope falloff.

SLFO2 = Second slope falloff.

PT = Transmitter output power

MT = Modulation type.

PW = Pulse width

PRT = Average pulse rise and fall time.

TABLE 2

MLS RECEIVER CHARACTERISTICS

Equipment Nomenclature	Tuning Range Frequency (MHz)	IFBW (kHz)	IF (MHz)	IF SLFO1 dB/sec	RF SLFO2 dB/sec	IM REJ (dB)	SRL (dB)	LSRF (MHz)	USRF (MHz)	SENS (dBm)	Required $(S/I)_T$ (dB)
MLS-DME-G/A	5067.9-5127.6	5400	305.9	120	20	70	70	4960	5227.7	-93	3
MLS-ANGLE DATA	5001.0-5060.7	260	372.9	96	80	70	70	4461	5600.7	-104	23

Notes: IF = Intermediate frequency.

SRL = Spurious response level.

LSRF = Lower spurious response frequency.

USRF = Upper spurious response frequency.

IM-Rej = Image rejection level.

SENS = Receiver sensitivity.

$(S/I)_T$ = Signal-to-interference threshold ratio.

IFBW = Bandwidth of the IF 3 dB breakpoint.

RF = Radio frequency.

SLFO1 = First slope falloff.

SLFO2 = Second slope falloff.

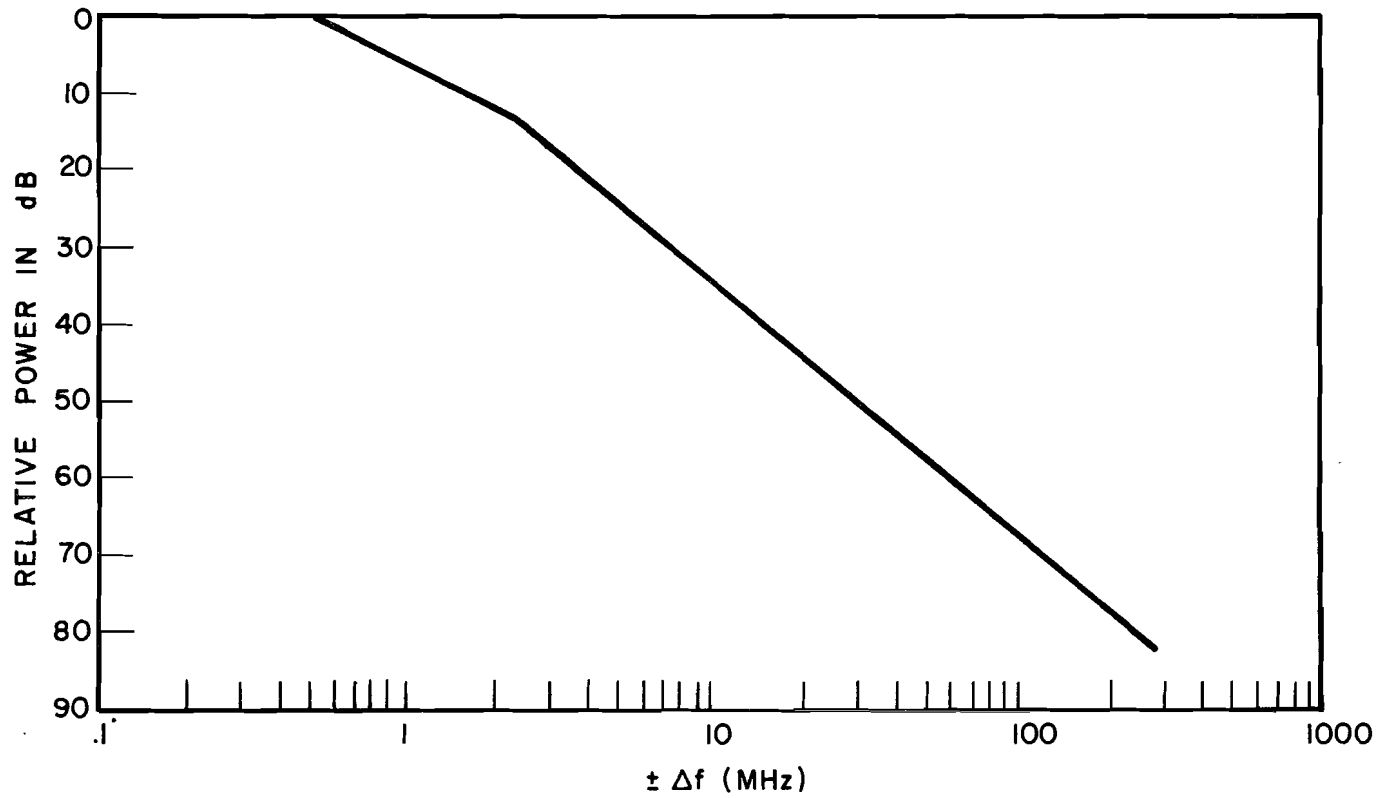

Figure 2. Calculated bounds of emission spectrum of MLS-DME A/G transmitter.

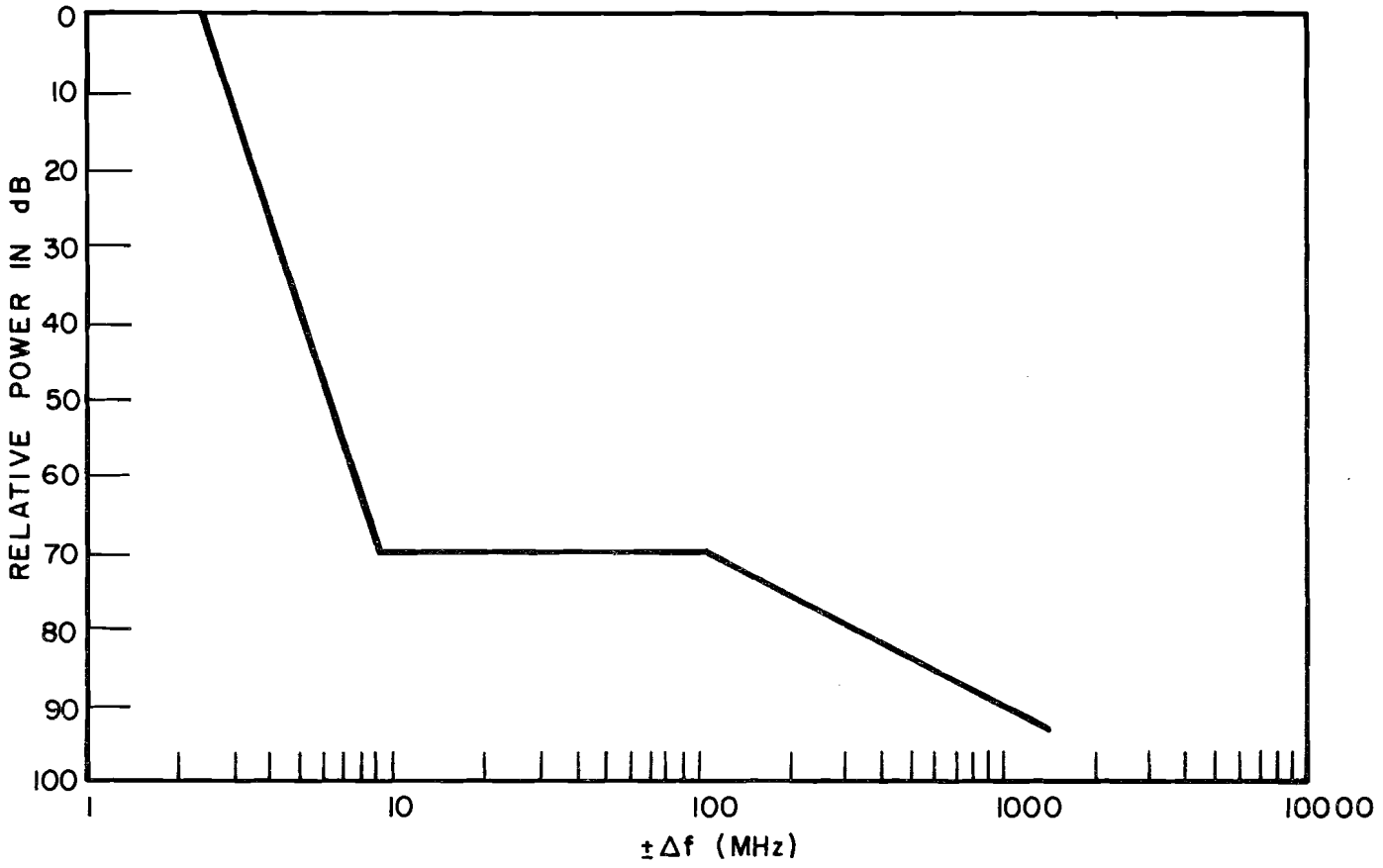

Figure 3. MLS-DME receiver selectivity curve.

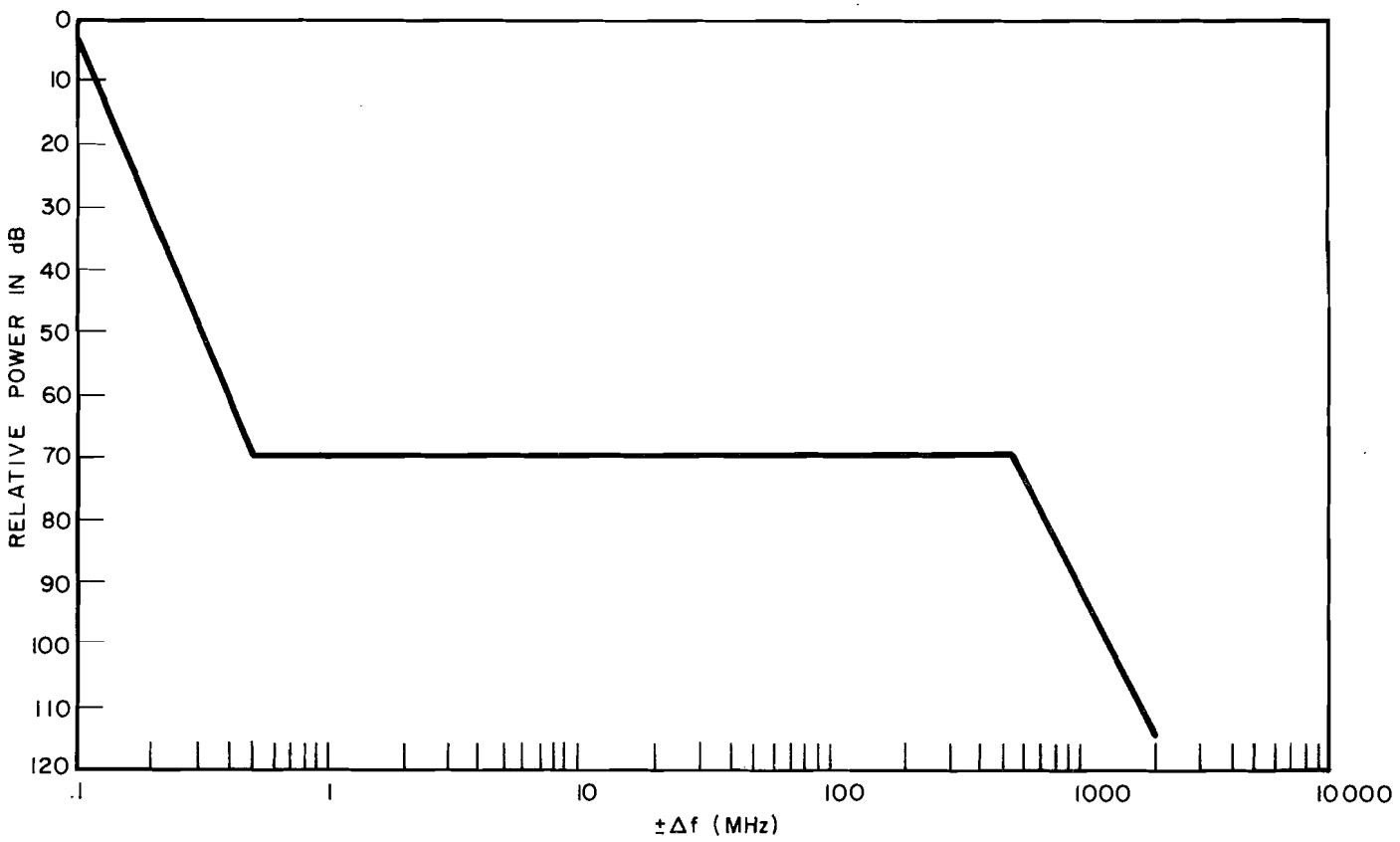

Figure 4. MLS angle-data receiver selectivity curve.

where

I = effective input interfering signal, dBm

FDR = frequency-dependent rejection offered by the receiver to the interfering signal, dB.

Satisfactory performance will be obtained when the ratio of the desired signal, S, to an interfering signal, I, exceeds an acceptable threshold signal-to-interference ratio, $(S/I)_T$. Conversely, a degraded condition can be said to exist if

$$I > S - (S/I)_T \tag{3}$$

where

$(S/I)_T$ = minimum value of S/I which ensures acceptable receiver performance, dB

I = received interference power, dBm

S = received desired signal, dBm.

Some of the signal-to-interference thresholds were obtained from References 4 and 5. For the remainder, conservative engineering estimates were used, based on known equipment characteristics.

If it is assumed that the desired signal is at the level of receiver sensitivity, R_S, the test for interference reduces to the following expression, which combines Expressions 2 and 3:

$$P_T + G_T + G_R - L_P + FDR > R_S - (S/I)_T \tag{4}$$

When the number of equipments in the environment is large, many interactions can be eliminated from further consideration if

$$P_T + G_T + G_R - L_P + FDR \leq R_S - (S/I)_T \tag{4a}$$

Only those cases where Expression 4a is not satisfied need be of concern. By rearranging the inequality of Expression 4a, it becomes:

---

[5]Morgan, G., *Avionics Interference Prediction Model*, ESD-TR-70-286, ECAC, Annapolis, MD, December 1970.

$$(S/I)_T + P_T + G_T + G_R - L_P + FDR \leq R_S \qquad (4b)$$

This expression was used to evaluate each interaction in this analysis. (Note that values of frequency-dependent rejection and propagation path loss are determined by the model.)

Frequency-Dependent-Rejection Losses

The FDR term is composed of a bandwidth rejection factor plus whichever of the following four factors yields the most power in the receiver passband: adjacent-band spillover, image response, spurious responses, or harmonics at the receiver fundamental frequency. These components of frequency-dependent rejection are further explained below.

Bandwidth Rejection Factor. The bandwidth rejection factor (on-tune rejection) for pulsed equipment is defined as follows:

$$\beta = 20 \log \frac{B_R}{B_{IT}}, \text{ when } B_{IT} > B_R$$

$$= 0, \qquad \text{when } B_{IT} \leq B_R \qquad (5)$$

where

B_R = the 3 dB bandwidth of the receiver

B_{IT} = the 3 dB emission bandwidth.

Adjacent-Band Spillover. Adjacent-band spillover is that part of a transmitter's radiated energy that is present in the bandpass of a receiver that is operating in an adjacent frequency band. The magnitude of this energy decreases as the frequency difference between the transmitter and the receiver increases.

Transmitter Harmonics. The power level of a harmonic of a transmitter frequency as received by the victim receiver.

Image Response. The response level to the signal at the image frequency of the victim receiver.

Spurious Responses. The maximum spurious response level of the victim receiver.

AVPAK determines how many of the above factors apply to a particular interaction between a receiver and transmitter, and

which is the most significant in each case. The FDR term is then combined with the other terms in Expression 4b to determine if there is an interference possibility.

Propagation Path Loss, L_P

Propagation losses in AVPAK are computed for two types of losses. One is the knife-edge diffraction loss, where one antenna of a pair is forward of the nose bulkhead and the other is aft. The other type, curvature path loss, is used when both antennas are on the fuselage aft of the bulkhead. The loss over a curved surface, L_{PC}, is combined with the knife-edge diffraction loss if one antenna is forward of the nose bulkhead, to obtain the propagation path loss, L_P. Figure 5 illustrates these two basic losses. Knife-edge diffraction geometry is represented by path A, where point a is the bulkhead obstruction, and a curved-surface path is represented by B.

Knife-Edge Diffraction. This loss, along a path between an antenna located on the fuselage and an antenna located on the forward side of the bulkhead, is calculated by AVPAK as follows (from Reference 4):

$$L_K = 10 \log \left(\frac{h^2 f}{20d}\right) \tag{6}$$

where

L_K = the knife-edge diffraction loss due to the nose bulkhead, in dB

h = the height of the obstruction above the end-point to end-point straight-line path, in feet

f = the transmitter frequency, in MHz

d = the distance between the bulkhead and the nearer of the two antennas under consideration, in feet.

Curvature Path Loss. This loss between two isotropic radiators located on the fuselage of the aircraft is calculated by representing the fuselage either as a conical section or a cylindrical section, or a combination of both. Figure 5 displays both shapes. However, only the cylindrical section was used in this analysis, since no antennas of interest were located on the conical portion of any of the aircraft.

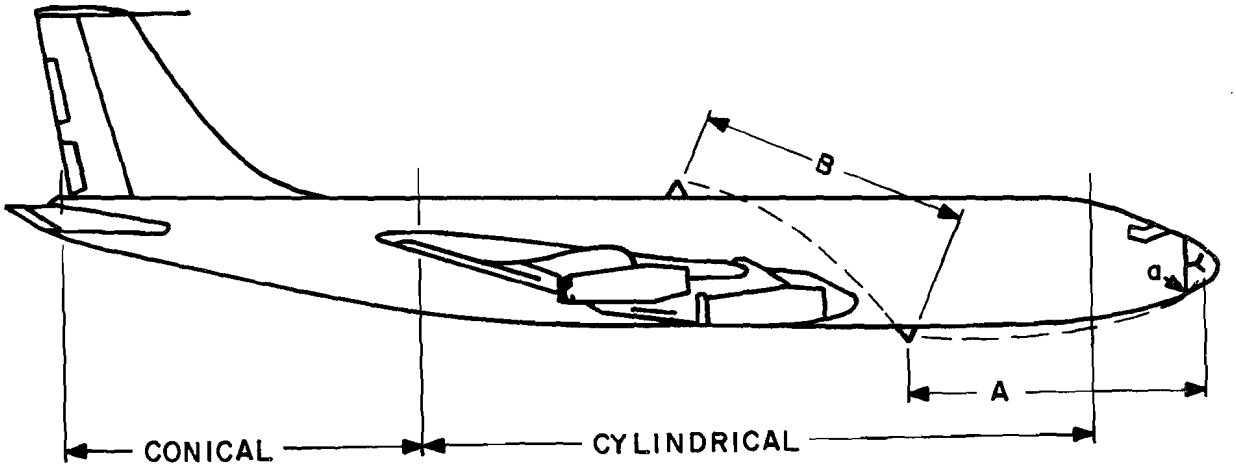

A = Knife edge diffraction loss occurs along path A at point a

B = Unobstructed path loss

Figure 5. Sideview of a representative aircraft showing the conical and cylindrical body shapes as well as the loss types as calculated by AVPAK.

The curvature path losses along a conducting cylindrical surface can be calculated using the following equation:

$$L_{PC} = L_{PF} + 10 \log F(Y) \tag{7}$$

where

L_{PC} = the path loss along a curved surface of the aircraft, dB

L_{PF} = the path loss if the surface were flattened into a plane, dB

$F(Y)$ = the loss factor due to the curvature of the surface; (i.e., the curvature factor).

Parameter Y, for a cylindrical approximation of an aircraft is

$$Y = \frac{a\ \phi^2 k^{\frac{1}{2}}}{\left[(\Delta z)^2 + (a\phi)^2\right]^{\frac{1}{4}}} \tag{8}$$

where

a = the radius of the cylinder, in feet

k = $2\pi/\lambda$ (λ is wavelength, in feet)

Δz = the distance between the antennas along the central axis of the cylinder, in feet

ϕ = included angle formed by radii to transmitting and receiving antennas, in radians

Figure 6, a plot of F(Y) versus Y from Reference 4, is used by the model to evaluate curvature factor(s).

The path loss (L_{PF}) between the antennas on a flattened surface is calculated using the free-space spreading loss formula:

$$L_{PF} = 20 \log f + 20 \log D - 37.8 \tag{9}$$

where

f = the transmitter frequency, in MHz

D = $[(\Delta z)^2 + (a\phi)^2]^{\frac{1}{2}}$, the distance between antennas, along a cylindrical helical path, in feet.

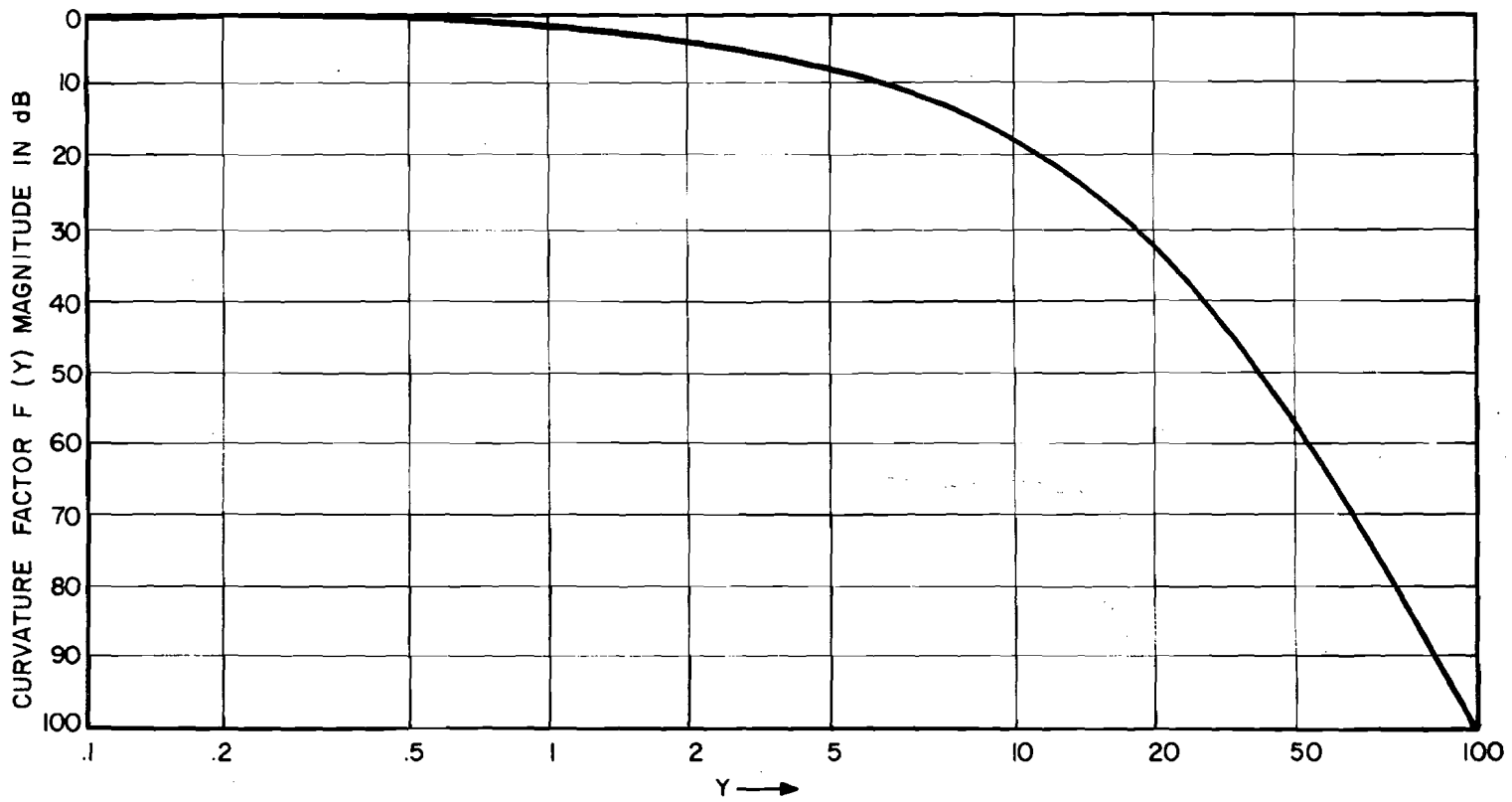

Figure 6. Curvature factor, F(y) versus y (from Reference 2).

The frequency-dependent-rejection losses and the propagation coupling losses in Expression 4b are calculated by the model. The other parameters, such as P_T, G_T, G_R, $(S/I)_T$ are necessary inputs to the model.

PARAMETERS DEFINITION

To utilize the Avionics Interference Prediction Model (AVPAK, Reference 4) for computations dealing with potential interference to the MLS system, the following information was required:

1. precise antenna location data for the aircraft being considered, and
2. the characteristics of the intra-aircraft equipment.

Antenna Locations

Nine aircraft were selected for analysis for which precise antenna location information was available. This information included:

1. the station number of each location in inches, measured from forward to aft on the aircraft,
2. the equipment or equipment type associated with each antenna location, and
3. the angular position of each antenna with respect to the aircraft vertical center plane, with 0° at the top of the fuselage.

The aircraft with precisely known antenna location data were as follows:

McDonnell Douglas	DC-10
McDonnell Douglas	DC-9 series 10
McDonnell Douglas	DC-8 series 50
Boeing	747 basic design
Boeing	737 series 100/200
Boeing	727
Boeing	707
Lockheed	L-1011
North American Rockwell	T-39 Sabreliner, series 40 with special antenna locations provided by the FAA (Reference 5)

Precisely defined antenna locations were not provided for military aircraft. However, similarities may exist between many military aircraft and the aircraft included in the analysis. For

instance, the Boeing 747 is almost as large as the military C5A aircraft. Likewise, the T-39 Sabreliner is dimensionally similar to both the F-4 series and A-7 series of military aircraft. Although precise information on the antenna locations and equipment characteristics would be required for a definitive analysis of these military aircraft, the *types of problems* involved are similar.

Figure 7 illustrates the coordinate system for locating antennas and TABLE 3 lists the nine aircraft under consideration, along with certain physical dimensions. TABLE 4 lists the station number associated with each antenna, the equipment function type, the radius, and the angle (Θ), for avionics equipment on board the nine aircraft analyzed.

Characteristics of Equipment

The ECAC Nominal Characteristics File and Organizational Platform Allowance File were searched for avionics equipment operating in the same band as the MLS, on adjacent frequencies, and on image-response and subharmonic frequencies.

The number of possible interferers was much too large to consider a one-to-one analysis of each possible interfering equipment. For this reason, the equipments were classified by frequency and/or function type and representative equipments were selected for analysis. Therefore, within each group, the equipments with the widest emission/selectivity bandwidths, highest output powers, and most-probable interference frequencies (i.e., co-channel, adjacent-channel, and harmonics of the MLS 5.0-5.25 GHz fundamental) were identified. Sixteen equipments were selected for analysis in five groups, as follows:

Function	Quantity
secondary surveillance radar (SSR)	2
distance measurement equipment (TACAN-DME)	2
long-range radio altimeter (LRRA)	7
weather radar (WEA RDR)	3
Doppler radar (D-RDR)	2

The reasons for the selection of these frequency/function type (F/FT) groups and the exclusion of other groups of equipments are indicated in the paragraphs following. The equipment characteristics applicable to this analysis are listed in TABLES 5, 6, and 7. A key to the abbreviations follows the tables.

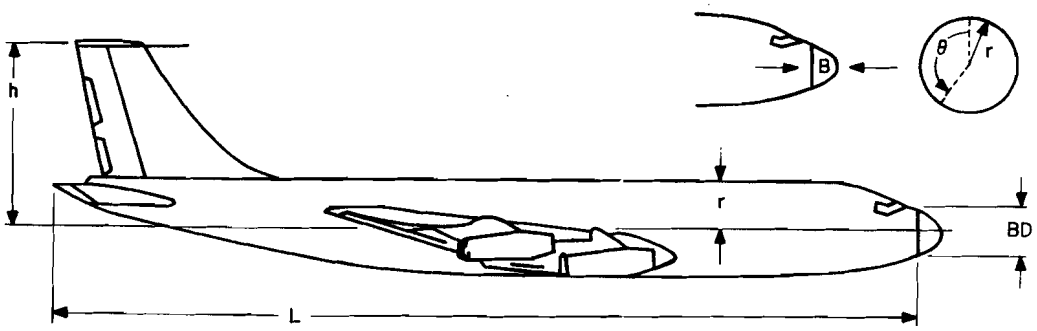

h = height of vertical stabilizer from the central axis of the aircraft, in feet.

L = the distance along the central axis of the aircraft from the forward bulkhead to the tail of the aircraft, in inches.

r = the radius of the fuselage (the center point is on the central axis), in feet.

B = the distance from the bulkhead to the nose, in feet.

BD = is the diameter of the bulkhead, in feet.

Θ = is an angle referenced to the top of the fuselage, in degrees.

Figure 7. Coordinate system for locating antennas.

TABLE 3

AIRCRAFT DIMENSIONS OF CONCERN[a]

Aircraft	Nose To Bulkhead	Bulkhead To Tail	Radius of Bulkhead	Radius of Fuselage	Height of Tail (Vert. Stabilizer)
BOEING 747	4.2 (1.28 m)	216.0 (65.84 m)	3.5 (1.07 m)	11.0 (3.35 m)	44.0 (13.4 m)
DC-10	3.0 (.914 m)	167.6 (51.08 m)	4.0 (1.22 m)	10.0 (3.05 m)	42.5 (12.95 m)
L-1011	4.0 (1.22 m)	171.7 (52.33 m)	3.5 (1.07 m)	9.8 (2.99 m)	38.2 (11.64 m)
DC-8 Series 50	3.0 (.914 m)	135.6 (41.33 m)	2.5 (.762 m)	8.2 (2.5 m)	28.2 (8.6 m)
BOEING 727	3.83 (1.17 m)	130.34 (39.73 m)	2.6 (.792 m)	6.6 (2.01 m)	22.66 (6.91 m)
BOEING 707	4.0 (1.27 m)	116.9 (35.63 m)	2.5 (.762 m)	6.4 (1.95 m)	30.0 (9.14 m)
DC-9 Series 10	3.0 (.914 m)	99 (30.2 m)	2.90 (.884 m)	6.05 (1.84 m)	19.0 (5.79 m)
BOEING 737 100/ 200	3.83 (1.17 m)	76.3 (23.3 m) 82.3 (25.1 m)	2.65 (.808 m)	6.3 (1.92 m)	21.0 (6.4 m)
T-39 SABRELINER	2.0 (.61 m)	39.2 (11.95 m)	1.8 (.549 m)	3.00 (.914 m)	9.0 (2.79 m)

[a]All dimensions are in feet, referenced to the central axis of the aircraft.

TABLE 4

EQUIPMENT FUNCTION AND ANTENNA LOCATIONS
(Page 1 of 3)

Aircraft	Function	Station Number (in.)	Radial Distance to Antenna (ft.)[c]	Θ (Degrees)[a]
BOEING 747	Weather Radar	123 (3.124 m)	.01 ≈ (0 m)	0
	MLS Nose System	132 (3.353 m)	3.00 (.914 m)	180
	MLS Angle (Tail)	2725 (69.215 m)	44.00[b] (13.4 m)	0
	SSR Interrogator	530 (13.46 m), 570 (14.48 m)	11.00 (3.35 m)	180
	DME	690 (17.53 m), 830 (21.08 m)	11.00 (3.35 m)	180
	Radio Altimeter (TX)	913 (23.19 m)	11.00 (3.35 m)	180
	Radio Altimeter (RX)	933 (23.7 m)	11.00 (3.35 m)	180
LOCKHEED TRISTAR L-1011	Weather Radar	40 (1.02 m)	.01≈(0 m)	0
	MLS Nose System	48 (1.22 m)	3.2 (.975 m)	180
	MLS Angle (Tail)	2100 (53.34 m)	38.2[b] (11.64 m)	0
	SSR Interrogator	565 (14.36 m), 606 (15.39 m)	9.8 (2.987 m)	178
	DME	485 (12.32 m), 665 (16.89 m)	9.8 (2.987 m)	167
	Radio Altimeter (TX)	1013 (25.73 m)	9.8 (2.987 m)	167
	Radio Altimeter (RX)	1053 (26.75 m)	9.8 (2.987 m)	193
MCDONNEL DOUGLAS DC-10	Weather Radar	265 (6.73 m)	.01≈(0 m)	0
	MLS Nose System	274 (6.96 m)	3.5 (1.07 m)	180
	MLS Angle (Tail)	2285 (58.03 m)	42.5[b] (12.96 m)	0
	SSR Interrogator	444 (11.277 m)	10.0 (3.05 m)	180
	DME	665 (16.89 m), 745 (18.92 m)	10.0 (3.05 m)	179, 181
	Radio Altimeter (TX)	1185 (30.1 m)	10.0 (3.05 m)	178, 182
	Radio Altimeter (RX)	1225 (31.12 m)	10.0 (3.05 m)	178, 182
	Doppler Radar	1275 (32.39 m)	10.0 (3.05 m)	180

TABLE 4

(Page 2 of 3)

Aircraft	Function	Station Number (in.)	Radial Distance to Antenna (ft.)[c]	Θ (Degrees)[a]
BOEING 727	Weather Radar	166.0 (4.22 m)	.01≈(0 m)	0
	MLS Nose System	175.0 (4.45 m)	2.00 (.611 m)	180
	MLS Angle (Tail)	1740.0 (44.2 m)	22.66[b] (6.91 m)	0
	Doppler Radar	381.5 (9.69 m)	6.6 (2.01 m)	180
	SSR Interrogator	470 (11.94 m), 510 (12.95 m)	6.6 (2.01 m)	180
	Radio Altimeter (TX)	530 (13.46 m), 570 (14.49 m)	6.6 (2.01 m)	180
	Radio Altimeter (RX)	530 (13.46 m), 570 (14.49 m)	6.6 (2.01 m)	180
	DME	730 (18.34 m), 840 (21.38 m)	6.6 (2.01 m)	180
BOEING 707	Weather Radar	162.0 (4.11 m)	.01≈(0 m)	0
	MLS Nose System	177.0 (4.5 m)	2.0 (.611 m)	180
	MLS Angle (Tail)	1580.0 (40.13 m)	30.0[b] (9.14 m)	0
	DME	430 (10.92 m), 650 (16.5 m)	6.4 (1.951 m)	180
	SSR Interrogator	248 (6.3 m), 710 (18.03 m)	6.4 (1.95 m)	180
	SSR Interrogator	302 (7.67 m)	6.4 (1.95 m)	0
	Radio Altimeter (TX)	1011 (25.68 m), 1030 (26.16 m)	6.4 (1.95 m)	180
	Radio Altimeter (RX)	1011 (25.68 m), 1030 (26.16 m)	6.4 (1.95 m) 6.4 (1.95 m)	180 180
BOEING 737	Weather Radar	160 (4.06 m)	.01≈(0 m)	0
	MLS Nose System	175 (4.44 m)	2.00 (.611 m)	180
	MSL Angle (Tail)	1080 (27.43 m)	21.00[b] (6.4 m)	0
	SSR Interrogator	305 (7.75 m) 355.4 (9.03 m)	6.3 (1.92 m)	180
	DME	468 (11.89 m) 580 (14.73 m)	6.3 (1.92 m)	180
	Radio Altimeter (TX)	390 (9.9 m)	6.3 (1.92 m)	180
	Radio Altimeter (RX)	410 (10.4 m)		
	Radio Altimeter (TX)	430 (10.92 m)	6.3 (1.92 m)	180
	Radio Altimeter (RX)	450 (11.43 m)		

TABLE 4

(Page 3 of 3)

Aircraft	Function	Station Number (in.)	Radial Distance to Antenna (ft.)[c]	Θ (Degrees)
MCDONNELL DOUGLAS DC-9 Series 10	Weather Radar	28 (.71 m)	.01≈(0 m)	0
	MLS Nose System	36 (.914 m)	2.66 (.81 m)	180
	MSL Angle Data (Tail)	1225 (31.1 m)	19.00[b] (5.79 m)	0
	SSR Interrogator	173.5 (4.41 m), 213.5 (5.42 m)	6.05 (1.84 m)	180
	Doppler Radar	256 (6.5 m)	6.05 (1.84 m)	180
	DME	384 (9.75 m), 498.7 (12.67 m)	6.05 (1.84 m)	180
	Radio Altimeter (TX)	399 (8.61 m), 396 (10.06 m)	6.05 (1.84 m)	180
	Radio Altimeter (RX)	282 (7.16 m), 453 (11.5 m)	6.05 (1.84 m)	180
MCDONNEL DOUGLAS DC-8 Series 50	Weather Radar	62 (1.57 m)	1.00 (.305 m)	180
	MLS Nose System	72 (1.83 m)	2.10 (.64 m)	180
	MSL Angle Data (Tail)	1700 (43.18 m)	28.2[b] (8.6 m)	0
	DME	330 (8.38 m), 570 (14.48 m)	8.2 (2.5 m)	180
	SSR Interrogator	450 (11.43 m)	8.2 (2.5 m)	180
	Radio Altimeter (TX)	750 (19.05 m)	8.2 (2.5 m)	180
	Radio Altimeter (RX)	786 (19.96 m)	8.2 (2.5 m)	180
MILITARY T-39	Weather Radar	24 (.61 m)	.01≈(0 m)	0
	MLS Nose System	35 (.889 m)	.8 (.24 m)	180
	MLS Angle Data (Tail)	507 (12.88 m)	9.08[b] (2.77 m)	0
	TACAN/DME (Above)	44 (1.12 m), 146 (3.71 m)	1.00 (.305 m), 3.27 (.997 m)	0
	TACAN/DME (Below)	110 (2.79 m), 337 (9.56 m)	3.14 (.96 m), 2.52 (.768 m)	180
	SSR Interrogator	43 (1.09 m)	1.50 (.457 m)	180
	Doppler Radar	190 (4.83 m)	3.27 (.997 m)	180
	Radio Altimeter (TX)	340 (8.64 m)	3.00 (.96 m)	180
	Radio Altimeter (RX)	370 (9.4 m)	2.64 (.805 m)	180

[a]See Figure 7.

[b]This is a raised antenna, i.e., above the fuselage.

[c]From central axis of aircraft

TABLE 5

TRANSMITTER CHARACTERISTICS

Function	Equipment Nomenclature	Tuning Range Frequency (MHz)	BWP1 (kHz)	BWP2 (kHz)	$SLFO_1$ (dB/dec)	$SLFO_2$ (dB/dec)	PT (dBm)	MT	PW (μs)	PRT (μs)	PRF (pps)
SSR	AN/APX-007	1030-1030	493	2400	20	40	63	P9F	1.0	0.3	145-320
SSR	AN/APX-076	1030-1030	1000	10000	20	40	60	P9F	0.45	0.05	65-1000
TACAN/DME	0860E2 Col.	1025-1150	107	256	20	40	64.8	P9F	3.5	2.5	44/290
TACAN/DME	AN/ARN-52V	1025-1150	330	850	33	56	58.8	P9	3.5	2.5	30/150
LRRA	AN/APN-022	4200-4400	60000	100000	310	20	30.0	F2	-	-	-
LRRA	AN/APN-201	4290-4310	160000	600000	75	20		P9	0.50	0.002	25000 UP
LRRA	A10101 Col.	4250-4350	140000	1400000	80	20	27.8	F2	-	-	-
LRRA	ALA051A Ben.	4200-4400	140000	1400000	80	20	26.0	F2	-	-	-
LRRA	AN/APN-209V	4200-4400	7000	32000	20	40	53.0	PO	0.70	0.02	5000-7000
LRRA	AN/APN-141	4200-4400	4920	26700	20	40	50.0	PO	0.105	0.025	3000
LRRA	AN/APN-203V	4200-4400	3780	7800	20	40	63.0	PO	0.15	0.02	4916
Wea. Rdr	AVQ-10 RCA	5380-5420	284	4760	20	40	78.7	PO	2.0	0.07	400
Wea. Rdr	AVQ-30C RCA	5370-5430	106	13300	20	40	78.0	PO	6.0	0.05	200
Wea. Rdr	WP 103A	9335-9414	190	640	20	40	73.0	PO	2.3	1.0	380-420
Doppler	DAR 12	8800	10000	100000	80	20	27.0	F2	-	-	-
Doppler	AN/APN-200	13300	10000	100000	80	20	30.0	F2	-	-	-

Notes:
- BWP1 = Bandwidth at first breakpoints of a transmitter two-slope emission spectrum.
- BWP2 = Bandwidth at second breakpoints of a transmitter two-slope emission spectrum.
- SLFO1 = First slope falloff.
- SLFO2 = Second slope falloff.
- PT = Transmitter output power.
- MT = Modulation Type.
- PW = Pulse Width.
- PRT = Average pulse rise and fall time.
- PRF = Pulse repetition frequency.

TABLE 6

ASSUMED HARMONIC-SUPPRESSION LEVELS

Function	Nomenclature	Suppression Levels (dB)
SSR	AN/APX-7	60
SSR	AN/APX-76	60
TACAN/DME	0860E2 COLLINS	60
TACAN/DME	AN/ARN-52V	80
LRRA	AN/ARN-22	60
LRRA	AN/ARN-201	60
LRRA	AL-101 COLLINS	70
LRRA	ALA-51A BENDIX	70
LRRA	AN/APN-209V	65
LRRA	AN/APN-141	60
LRRA	AN/APN-203V	80
WEA-RDR	AVQ-10 RCA	60
WEA-RDR	AVQ-30 RCA	80
WEA-RDR	WP 103A	60
MLS DME-A/G	MLS DME-A/G	60
DOPPLER RDR	DAR 12	60
DOPPLER RDR	AN/APN-200	60

TABLE 7

RECEIVER CHARACTERISTICS

Function	Nomenclature	Tuning Range Frequency (MHz)	IF BW (kHz)[k]	IF (MHz)	IF SLOPE (dB/dec)	RF SLOPE (dB/dec)	IM REJ (dB)[e]	SRL (dB)[f]	LSRF (MHz)[g]	USRF (MHz)[h]	SENS (dBm)	$(S/I)_T$ (dB)[j]
LRRA	AN/APN-22	4200-4400	180,000[a]	.01[b]	690	700	60	60			- 88	10
LRRA	AN/APN-201	4290-4310	200,000[a]	.01[b]	230	210	60	60	2890	5710	-136	6
LRRA	AL 101 Collins	4250-4350	200,000[a]	.01[b]	690	710	60	70	4130	4470	- 88	10
LRRA	ALA 51A Bendix	4200-4400	188,000[a]	.01[b]	690	710	60	70	4130	4470	- 88	10
LRRA	AN/APN-209V	4200-4400	15,000	60	109	100	70	70	3900	4900	- 83	10
LRRA	AN/APN-141	4290-4300	120,000[a]	.01[b]	70	70	60	60	4130	4470	- 65	10
LRRA	AN/APN-203V	4200-4400	12,000[a]	60	80	80	80	80	4120	4480	- 80	12
Wea. Rdr	AVQ-10 RCA	5380-5420	5,000	60	120	120	0	60	5371	5429	-100	10
Wea. Rdr	AVQ-30C RCA	5370-5430	350	30	64	100	3	60	4870	5936	-109	6
Wea. Rdr	WP 103	9335-9414	1,000	30	100	599	0	60	6560	10000	-104	10[c]
Doppler Rdr	DAR-12	8800	800	5	100	600	0	80	6560	10000	-120	10[c]
Doppler Rdr	AN/APN-200	13300	800	5	100	200	80	80	13250	13350	-120	10[d]

[a]These equipments have no IF BW, the RF BW's were used to reflect the widest receiver bandwidth.

[b]The model requires a recovery value , because these equipment have no IF BW.

[c]S/I threshold obtained via. Reference 5.

[d]S/I threshold obtained via. Reference 4.

[e]Image rejection level.

[f]Spurious response level.

[g]Lower spurious response frequency.

[h]Upper spurious response frequency.

[j]Signal-to-interference threshold level.

[k]Bandwidth at 3 dB level.

F/FT Group 1, Secondary Surveillance Radar. In the near future, a secondary surveillance radar (SSR) interrogator, as part of a collision-avoidance system, will probably be standard equipment on many commercial aircraft. Many military aircraft already have an SSR interrogator as standard equipment. The fifth harmonic of the SSR interrogation frequency of 1030 MHz is nearly in-band with the MLS-DME ground-to-air (G/A) receiver (5067.9-5127.6 MHz) and may cause interference. However, two frequency plans are now being considered for the MLS. If the primary frequencies are translated up 30 MHz, the fifth harmonic (5150 MHz) of SSR interrogation frequency of 1030 MHz would occur within the MLS-DME G/A receiver frequency band. Therefore, if the translated frequency assignments are used, the only protection against possible interference would be the SSR's harmonic suppression capability.

The SSR transponder was not considered in this analysis, even though the receiver frequency of 1030 MHz falls on a subharmonic of the MLS-DME transmitter frequency (5127.9-5187.6 MHz), because of the large frequency-dependent rejection of approximately -138 dB between the receiver and transmitter. In addition, the SSR transmitter frequency of 1090 MHz does not have a harmonic relationship to the MLS 5.0-5.25 GHz frequency band.

F/FT Group 2, TACAN/DME. If the primary frequency plan is used (5001.0-5060.7 MHz for the MLS angle-data receiver, 5067.9-5127.6 MHz for the MLS-DME G/A receiver, and 5127.9-5187.6 MHz for the MLS-DME A/G transmitter), the only potential interference from equipment in the 962-1213 MHz band is the fifth harmonic of TACAN/DME air-to-ground channel number 1 (1025 MHz). The fifth harmonic (5125 MHz) falls within the MLS-DME G/A receive frequency range. For this frequency combination, the only protection against interference in an MLS-DME G/A receiver would be the harmonic suppression level of the TACAN/DME transmitter.

If the frequency plan is translated up 30 MHz, the tuning range of the MLS-DME G/A receiver would be 5097.0-5157.6 MHz. The first seven air-to-ground TACAN/DME channels (1025-1031 MHz) would then have fifth harmonics (5125-5155 MHz) in the tuning range of the MLS-DME G/A receiver.

While commercial aircraft do not use the military channels (1025-1031 MHz) for TACAN/DME, it is obvious that the military might experience problems if the translated frequency plan of MLS and TACAN/DME channels 1-7 are operated in the same environment.

F/FT Group 3, Long-Range Altimeters. Long-range radio altimeters (LRRA) operate in a range from 4200 to 4400 MHz and merited examination because of the relative proximity to the MLS frequency band.

F/FT Group 4, Weather Radar. Two of the three weather radars examined operate at frequencies ranging from 5.37 to 5.43 GHz. These operating frequencies are near the frequency band of the MLS.

Thus, if it were desired to locate the MLS horn antenna within the nose section of the aircraft, the MLS might adversely affect the weather radar and vice versa. The computer model was used to determine potential problems between the MLS and the 5.3-5.4 GHz weather radars on all other aircraft. Since results indicated a problem, a more detailed analysis was undertaken and is described later.

The third weather radar examined operated in the frequency range of 9.337 to 9.414 GHz. This weather radar was not of major concern because of the frequency separation between it and the MLS. The weather radar receiver is isolated from the MLS-DME A/G transmitter by its waveguide cut-off frequency of 5.9 GHz. The MLS receiving function has some isolation from this weather radar, due in part to the large frequency-dependent rejection experienced by the interfering signals at the MLS receivers. Only one aircraft (the T-39 Sabreliner) had the 9.337-to-9.414 GHz weather radar.

F/FT Group 5, Doppler Radar. The representative Doppler radars (D-RDR) operate on two different frequencies: 8800 MHz and 13,200 MHz. Because the MLS transmitting equipment (MLS-DME A/G) transmits on 5127.9-5187.6 MHz, the Doppler radars operating on 8800 MHz and 13,200 MHz, respectively, are close to a harmonic of the MLS transmitting system. Therefore, these two Doppler radars merited examination; results of the examination are presented in TABLE 8.

INITIAL RESULTS

The model described earlier was used to assess the effects of the intra-aircraft environment on the MLS system. The results for implementation of the primary frequency plan are summarized in TABLE 8 for the nine selected aircraft types.

An example of how the results were obtained is given below as an aid to understanding the table. A particular segment of the AVPAK computer printout is given below for the DC-10 aircraft.

TABLE 8

INTERFERING POWER LEVELS IN RELATION TO RECEIVER SENSITIVITY FOR PRIMARY FREQUENCY PLAN[a]

Interferer	Victim Receiver	McDonnell Douglas DC-10	McDonnell Douglas DC-9	McDonnell Douglas DC-8	Boeing 747	Boeing 737	Boeing 727	Boeing 707	Lockheed Tristar L-1011	T-39 Sabreliner
Weather Radar	MLS Angle Data (Nose)	+ 64	+ 66	+82	+66	+62	+64	+63	+65	-10
Weather Radar	MLS DME G/A (Nose)	+ 29	+ 30	+51	+30	+31	+33	+32	+29	+ 2
Weather Radar	MLS Angle Data (Tail)	+ 4	+ 10	+ 5	+ 3	+13	+ 5	+ 9	+ 4	-58
MLS DME A/G (Nose)	Weather Radar	+ 32	+ 33	+38	+33	+19	+21	+20	+33	-31
MLS DME A/G (Nose)	Long Range Radio Altimeter	- 18	- 7	-17	-23	- 5	-42	-38	-27	-39
MLS DME A/G (Nose)	Doppler	- 88	- 69	X	X	X	-76	X	X	-51
MLS DME A/G (Nose)	MLS Angle (Tail)	- 32	- 24	-25	-32	-21	-25	-24	-31	-10
SSR Interrogator	MLS Angle Data (Nose)	- 38	- 31	-42	-46	-32	-60	-47	-41	-19
SSR Interrogator	MLS DME G/A (Nose)	- 38	- 31	-43	-46	-32	-60	-38	-44	-10
SSR Interrogator	MLS Angle Data (Tail)	- 65	- 53	-61	-67	-56	-21	-57	-65	-28
Long Range Radio Altimeter	MLS Angle Data (Nose)	- 22	- 6	-51	-27	- 3	-15	-21	-23	-51
Long Range Radio Altimeter	MLS DME G/A (Nose)	- 38	- 33	-68	-55	-21	-43	-38	-54	-69
Long Range Radio Altimeter	MLS Angle Data (Tail)	- 35	- 22	-63	-27	-12	-23	-29	-29	-39
Distance Measurement Equip.	MLS Angle Data (Nose)	- 35	- 28	-30	-38	-27	-29	-31	-29	-25
Distance Measurement Equip.	MLS DME G/A (Nose)	+ 7	+ 14	+13	+ 4	+15	-10	+11	+10	+18
Distance Measurement Equip.	MLS Angle Data (Tail)	- 58	- 46	-52	-58	-48	-24	-47	-56	- 3
Doppler Radar	MLS Angle Data (Nose)	-122	-105	X	X	X	-110	X	X	-118
Doppler Radar	MLS DME G/A (Nose)	-118	- 90	X	X	X	-96	X	X	-94
Doppler Radar	MLS Angle Data (Tail)	-157	-135	X	X	X	-135	X	X	-128

[a]Positive numbers indicate possibility of interference.

[b]Values shown are in reference to receiver sensitivity.

[c]An X indicates no Doppler radars were found on the aircraft.

[d]( ) indicates MLS antenna location.

For this example, the Doppler radar transmitter operates at a frequency of 13,300 MHz and the MLS-DME G/A receiver operates over a range of frequencies from 5067.9 to 5127.6 MHz.

Transmitter	Receiver	S/I	+	P_T	+	L_F	+	G_T	+	G_R	-	L_P	=	P_I	<	R_S
Doppler	MLS-DME-G/A	3.	+	30.	+	-108.	+	-20.	+	0.	-	116.	=	-211.	<	-93.

As previously stated in the subsection on model theory, values for S/I, P_T, G_T, G_R, and R_S are required inputs to the model. L_P and L_F (FDR) are calculated by the model and combined with S/I, P_T, G_T, and G_R to obtain an interference power, P_I. The P_I in this case is -211 dBm. When the receiver sensitivity, R_S (in this case -93 dBm), is subtracted, the result is negative (P_I - R_S = -118 dB), indicating that the interference power level does not exceed the sensitivity. Thus, a non-interference condition is predicted.

In examining the table, note that no interactions were predicted between the MLS and the long-range radio altimeters, SSR interrogators, or the Doppler radars.

Further examination of the table indicates that interactions were predicted between the MLS and the weather radars in all aircraft where the radar operates in the 5.3-5.4 GHz band. The table shows that the MLS angle-data receiver's antenna atop the vertical stabilizer would have a variety of interactions with the weather radar transmitters, depending on the relative distance between the vertical stabilizer and the nose section of the aircraft. In the case of the DME or TACAN/DME transmitter, marginal fifth-harmonic interactions with the MLS-DME G/A receiver (nose) location were indicated.

If the alternate frequency plan is used, the results in TABLE 8 should be changed to reflect the following possible interactions:

1. The fifth harmonic of the secondary surveillance radar (SSR) interrogation frequency (1030 MHz) occurs in the translated frequency band of the MLS DME G/A receiver (5097.9-5157.6 MHz), which might result in potential interference to the system.
2. The TACAN/DME interrogator operation on the first seven 1-MHz channels (1025-1031 MHz) might cause harmonic interference to the MLS DME G/A receiver.

The physical dimensions and electrical properties of the C-747 aircraft are similar to those of the Military C-5A aircraft, and the A-7 and F-4 series of military aircraft are dimensionally similar to the T-39 Sabreliner. Therefore, the conclusions drawn for the 747 and the T-39 Sabreliner may be applicable to the indicated military aircraft, provided similar environment and equipment characteristics are used.

NEAR-FIELD CONDITION ANALYSIS

The initial part of the analysis identified those interactions where the MLS avionics may experience interference from other on-board equipments. The prominent interaction is between the weather radar transmitter and the MLS angle-data receiver. This part of the analysis addresses the effect of this interaction on MLS operation.

Received Power Calculation

Figure 8 illustrates the nose section of a Boeing 707, 727, or a 737 aircraft with the AVQ-10 weather radar antenna and the MLS antenna. The MLS horn antenna is in the near field of the weather radar antenna. The power density from the radar at the MLS antenna was calculated to be 62 dBm/m^2. This value was obtained using a technique suggested by Cherot[6] and the AVQ-10 characteristics of TABLE 5.

The received power from the weather radar depends on the power density and effective area of the MLS antenna aperture. Gain of the MLS antenna at an off-axis angle of 38.5° (see Figure 8) was obtained from Figure 9. This plot is a vertical, free-space antenna pattern for a waveguide horn with a 6.75 dBi mainbeam gain.[7] The value of gain chosen from this plot will be conservative for the more-directional 12-dBi-gain antenna assumed in this analysis.

The effective area, A_e, for the MLS antenna is:

$$A_e = G_{R(38.5°)} + 20 \log \lambda - 10 \log 4\pi$$
$$= -34 \text{ dB-m}^2 \qquad (10)$$

[6]Cherot, T. E., "Calculation of the Near-field Antenna Patterns of Aperture Antennas," Pacific Missile Range, Point Mugu, California, 1967 IEEE *Electromagnetic Compatibility Symposium Record*, Washington, DC, July 1967.

[7]Fries, J. R., Stapleton, B. P., *MLS Airborne Antenna/Radome Study*, FAA Contract DOT FA72WA-3010, The Boeing Commercial Airplane Company, A Division of the Boeing Company, PO Box 3707, Seattle, WA, June 1975.

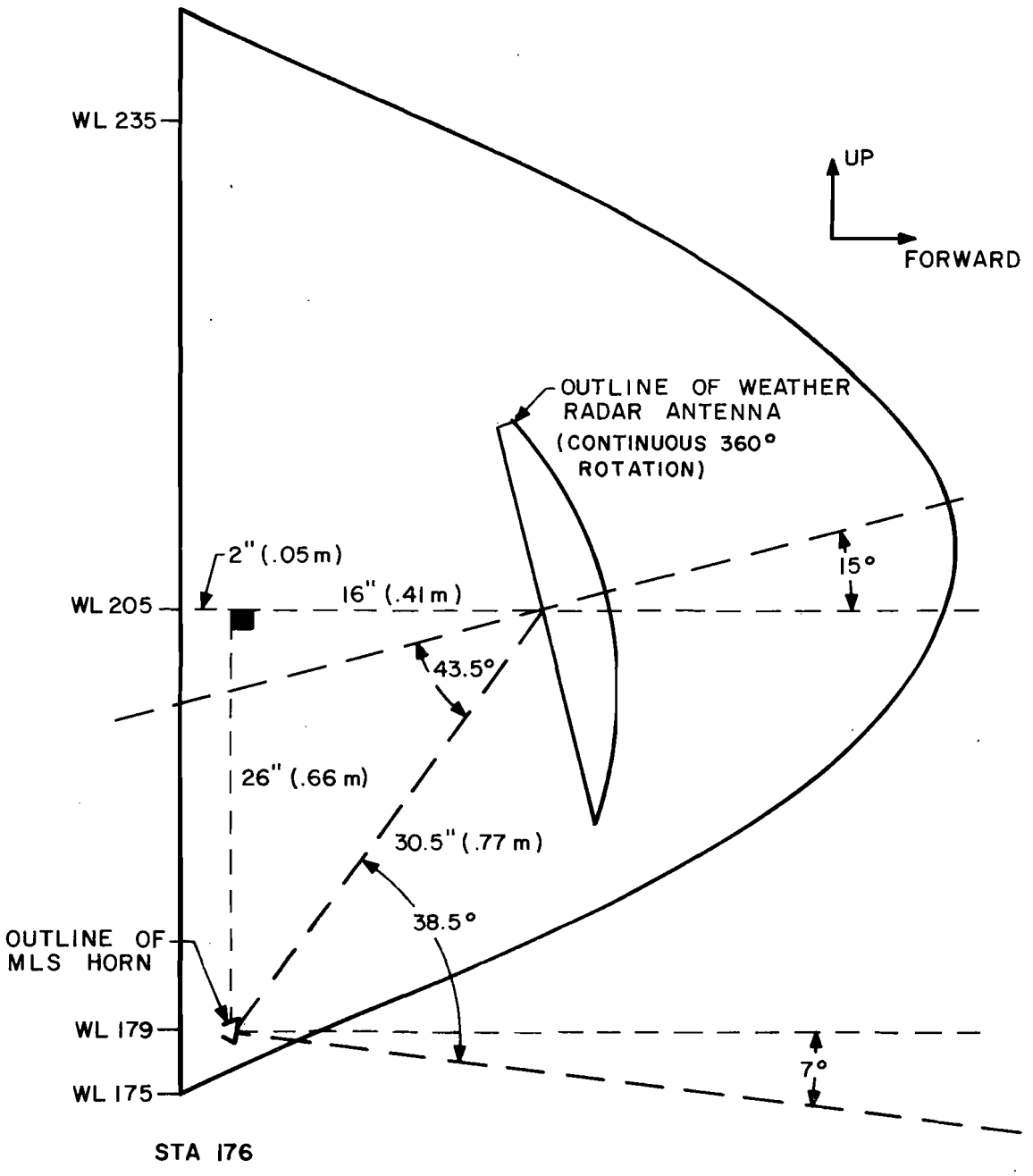

Figure 8. Antenna geometry within radome for worst-case interference.

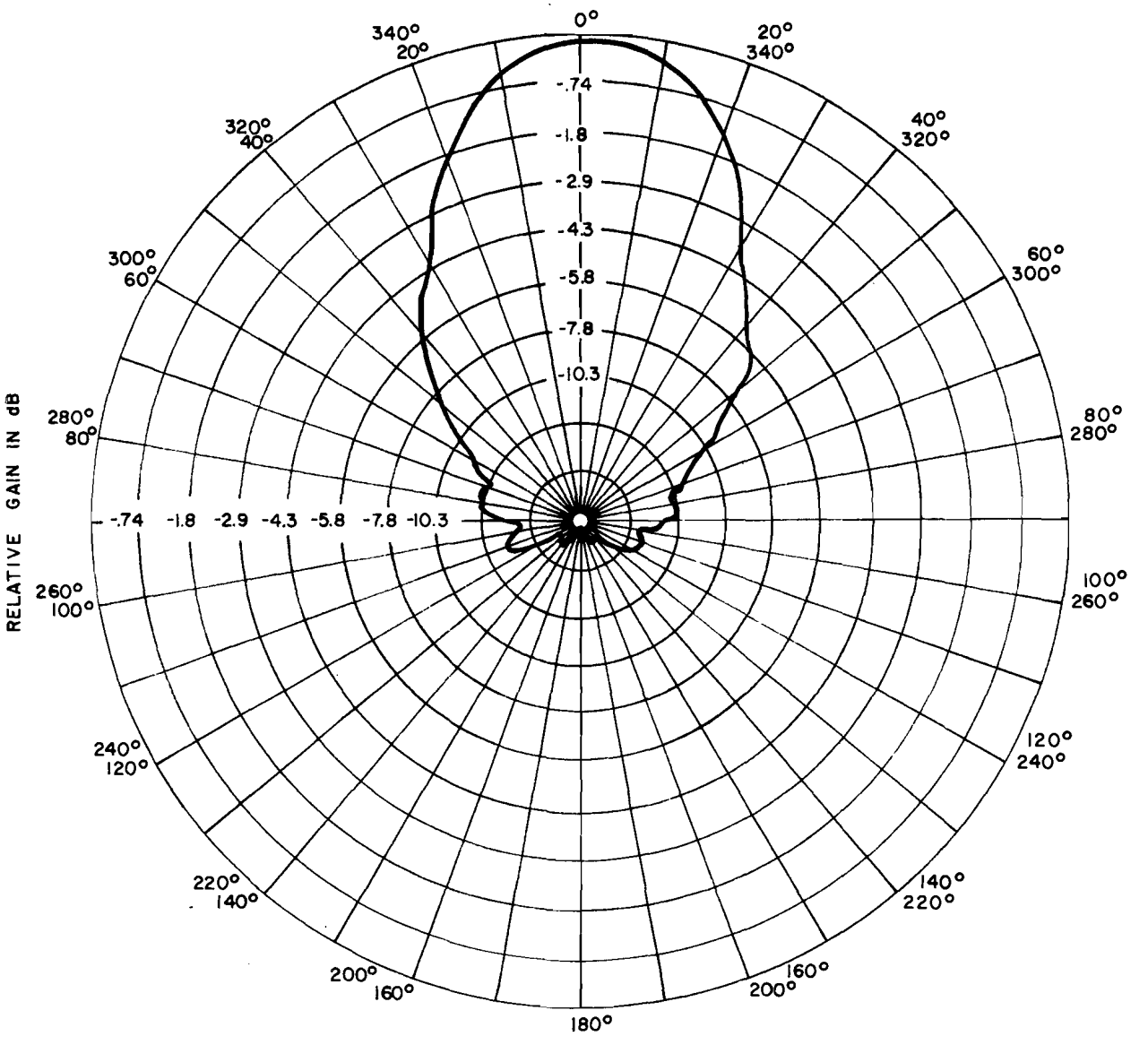

Figure 9. Vertical antenna pattern for a waveguide horn antenna at 5047 MHz (from Reference 7).

The received power entering the MLS receiver is then

$$P_R = 62 \text{ dBm/m}^2 + (-34) \text{ dB-m}^2$$

$$= 28 \text{ dBm} \quad (11)$$

The frequency-dependent rejection (or OFR) provided at the second IF by the MLS receiver, in response to the weather radar transmitter, was calculated by an ECAC model to be 75 dB. Therefore, the predicted interference power received by the MLS is

$$P_{R(I)} = P_R - \text{OFR}$$

$$= -47 \text{ dBm} \quad (12)$$

Effect on MLS Performance

How the interfering power from the weather radar affects MLS performance depends on the desired signal level. The MLS approach-coverage volume extends a minimum of 20 nmi from the runway. The airborne angle-data processor must receive and track the ground-transmitted angle-guidance signal at any location within the coverage volume. The received power of the desired signal was calculated at ranges of 5, 10, 15, and 20 nmi from the ground transmitter using the following equation:

$$S = P_T + G_T + G_R - L_P - L_C \quad (13)$$

where

S = desired signal from the transmitter site, dBm

P_T = transmitter peak power from ground installation, 40 dBm

G_T = transmitting antenna gain from ground installation, 19.6 dBi

G_R = receiving antenna gain from airborne installation, 12 dBi

L_P = free space spreading loss, dB.

and

$$L_P = 20 \log d + 20 \log f + 38.6 \quad (14)$$

d = distance between antennas, nmi

f = frequency, MHz

L_C = cable loss (5.4) + rain attenuation (2.8) + aircraft antenna-to-receiver loss (3.0) dB

L_C = 11.2 dB.

TABLE 9 shows the calculated desired signal level at the four ranges. The last item in the table is the signal-to-interference ratio for the desired signal, S, and the interfering weather-radar signal, I.

Reference 3 states that typical C-Band radars operating in a collocated environment will cause the MLS to lose track or fail to acquire track if the interfering signal level is 10 dB greater than the MLS signal (i.e., $S/I \leq -10$ dB prevents tracking). Therefore, comparing this threshold with the calculated S/I values of TABLE 9 shows that the weather radar can prevent track at all distances within the MLS coverage volume. This will occur without, as well as with, losses caused by rainfall.

It is recognized that the effect of the weather radar on the MLS could be reduced by certain factors not considered in the analysis, such as cross-polarization and defocussing. The effect of these, however, will vary between aircraft and equipment types, and could best be determined through measurement.

TABLE 9

CALCULATED DESIRED-SIGNAL LEVELS, LOSSES, AND RATIOS

Parameter	20 nmi (37.1 kilometers)	15 nmi (27.8 kilometers)	10 nmi (18.5 kilometers)	5 nmi (9.3 kilometers)
L_p	138.6 dB	134.6 dB	132.6 dB	126.6 dB
L_C (W Rain)	11.2 dB	11.2 dB	11.2 dB	11.2 dB
L_C (W/O Rain attenuation)	8.4 dB	8.4 dB	8.4 dB	8.4 dB
S (W Rain)	-78.2 dB	-74.2 dBm	-72.2 dBm	-66.2 dBm
S (W/O Rain)	-75.4 dBm	-71.4 dBm	-69.4 dBm	-63.4 dBm
S/I (W Rain)	-30.6 dB	-26.6 dB	-24.6 dB	-18.6 dB
S/I (W/O Rain)	-27.8 dB	-23.8 dB	-21.8 dB	-15.8 dB

SECTION 3

CONCLUSIONS

The major problem between MLS avionics and other avionics equipment on board aircraft is expected to be the interference between the C-Band (5370-5430 MHz) weather radar transmitter and the *angle-data receiver* of the MLS. Interference from the weather radar may prevent track acquisition or cause loss of track within the required coverage range of the MLS. It appears that during simultaneous operation of these equipments, additional isolation will be required between the MLS and C-Band weather radar antennas, or the MLS receiver and antenna will have to be redesigned for immunity to the weather radar.

Additional potential interference problems were identified. DME transceiver interaction with the weather radar receiver and vice versa will occur if the DME function is provided by C-Band equipment but not if provided by L-Band equipment (962-1215 MHz).

Indications are that, in the future, aircraft avionics on some commercial aircraft will include a secondary-surveillance-radar (SSR) interrogator (as presently employed by some military aircraft) that operates at 1030 MHz, and interference interactions from fifth-order harmonics may be experienced by the MLS if the MLS alternate frequency plan is implemented. For both primary and alternate frequency plans, if L-Band ranging is not implemented, the fifth-order harmonic of the TACAN/DME transmitters operating on channels 1 through 7 pose a potential interference threat to the G/A function of the MLS DME.

GLOSSARY OF ACRONYMS AND ABBREVIATIONS

DME - Distance Measuring Equipment

D-RDR - Doppler Radar

ECAC - Electromagnetic Compatibility Analysis Center

FAA - Federal Aviation Administration

FDR - Frequency Dependent Rejection

ICAO - International Civil Aviation Organization

ILS - Instrument Landing System

LRRA - Long-Range Radio Altimeter

MLS - Microwave Landing System

SSR - Secondary Surveillance Radar

TACAN - Tactical Air Navigation

TRSB - Time Reference Scanning Beam

WEA RDR - Weather Radar

REFERENCES

1. Interagency Agreement, DOT-FA70WAI-175, Task Assignment No. 29.

2. Department of Transportation, Federal Aviation Administration, *Time Reference Scanning Beam Microwave Landing System: A New Non-Visual Precision Approach and Landing Guidance System for International Civil Aviation*, Washington, DC, December 1975.

3. Frazier, R. R., *In-Band Compatibility Analysis of the RTCA Proposed Microwave Landing Guidance System (LGS) and Candidate Interim System*, FAA-RD-72-62, ECAC, Annapolis, MD, July 1973.

4. Friske, L. C., *An Extended Avionics Interference Prediction Model*, FAA-RD-73-9, ECAC, Annapolis, MD, June 1973.

5. Morgan, G., *Avionics Interference Prediction Model*, ESD-TR-70-286, ECAC, Annapolis, MD, December 1970.

6. Cherot, T. E., "Calculation of the Near-field Antenna Patterns of Aperture Antennas," Pacific Missile Range, Point Mugu, California, 1967 IEEE *Electromagnetic Compatibility Symposium Record*, Washington, DC, July 1967.

7. Fries, J. R., Stapleton, B. P., *MLS Airborne Antenna/Radome Study*, FAA Contract DOT FA72WA-3010, The Boeing Commercial Airplane Company, A Division of the Boeing Company, PO Box 3707, Seattle, WA, June 1975.