Report No. FAA-RD-77-15

NA-76-44

COPY 1 2

EVALUATION OF VERY HIGH FREQUENCY INTERFERENCE CANCELLATION SYSTEM

FAA WJH Technical Center
00093013

Charles G. Santora

March 1977

FINAL REPORT

Document is available to the public through the
National Technical Information Service
Springfield, Virginia 22151

Prepared for

U. S. DEPARTMENT OF TRANSPORTATION
FEDERAL AVIATION ADMINISTRATION
Systems Research & Development Service
Washington, D.C. 20590

NOTICE

This document is disseminated under the sponsorship of the Department of Transportation in the interest of information exchange. The United States Government assumes no liability for its contents or use thereof.

Technical Report Documentation Page

1. Report No. FAA-RD-77-15	2. Government Accession No.	3. Recipient's Catalog No.
4. Title and Subtitle EVALUATION OF VERY HIGH FREQUENCY INTERFERENCE CANCELLATION SYSTEM		5. Report Date March 1977
		6. Performing Organization Code
7. Author(s) Charles G. Santora		8. Performing Organization Report No. NA- FAA-76-44
9. Performing Organization Name and Address Federal Aviation Administration National Aviation Facilities Experimental Center Atlantic City, New Jersey 08405		10. Work Unit No. (TRAIS)
		11. Contract or Grant No. 062-221-030
12. Sponsoring Agency Name and Address U.S. Department of Transportation Federal Aviation Administration Systems Research and Development Service Washington, D.C. 20590		13. Type of Report and Period Covered Final February 1976-August 1976
		14. Sponsoring Agency Code
15. Supplementary Notes		

16. Abstract

This report describes a device to be used at sites, such as remote center air-ground facilities (RCAG's) and Flight Service Stations (FSS's) to counteract the interference due to reception of strong signals from collocated transmitters. The interference cancellation system unit tested handled up to four interfering transmitters and was found to perform as specified and reduce received interfering signals at power levels up to +10 decibels referred to 1 milliwatt (dBm) down to at least -45 dBm.

17. Key Words Radio Receiver Interference Radio Reception Interference Collocated Transmitters and Receivers Transmitter-Receivers Communications		18. Distribution Statement Document is available to the public through the National Technical Information Service, Springfield, Virginia 22151	
19. Security Classif. (of this report) Unclassified	20. Security Classif. (of this page) Unclassified	21. No. of Pages 43	22. Price

Form DOT F 1700.7 (8-72) Reproduction of completed page authorized

PREFACE

Acknowledgement is made to electronics technicians Adolph Cupp, whose expertise in operating and maintaining field-type transmitters and receivers was indispensible and who worked very conscientiously to fully implement test requirements and locate and obtain the sophisticated test equipment needed, and Joseph Bilello, who initially conducted the test implementation and investigation.

Acknowledgement is also made to Washington manager, Oliver DeZoute; NAFEC program manager, John Williamson; Millville Flight Service Station technical manager, David McCrum, for field usage information; and General Atronics personnel, Andrew Zeger, Burton Abrams, and Lawrence Burgess, for their unstinting cooperation and voluntary follow-up of technical questions.

TABLE OF CONTENTS

	Page
INTRODUCTION	1
Purpose	1
Background	1
Device Description	1
TEST PROCEDURES AND MEASUREMENTS	3
ICS Effects on Transmission	4
ICS Effects on Reception	5
Interfering Signal Reduction	6
Standard Receiver Response to Interfering Signal	9
SUMMARY OF RESULTS	11
CONCLUSIONS	13
RECOMMENDATIONS	13
APPENDIX	
ICS Requirements and Requirements Analysis	

LIST OF ILLUSTRATIONS

Figure		Page
1	Overall Representation of ICS	14
2	ICS Transmitter Unit	15
3	ICS Receiver Unit	16
4	ICS at RCAG or Other Sites	17
5	Block Diagram of VHF ICS Receiver Unit	18
6	Channel Module Block Diagram	19
7	Illustration of Cancellation Loop Relationships	20
8	An Instantaneous Vector Representation of Loop Voltages	21
9	A Transmitter and Receiver Rack	22
10	Outside View of Test Site Antennas and Building 176	23
11	Composite Setup for Tests Related to Transmission	24
12	Composite Setup for Tests Related to ICS Effects on Reception	25
13	Composite Setup for Tests Related to Interference Signal Reduction	26
14	Unsuppressed and Suppressed Interference Signal Displays on Spectrum Analyzer (Power vs. Frequency)	27
15	Correlation of Carrier and Sidebands with Signal Reference Path Difference	28
16	Examination of Short Segment of Signal Versus Reference Path Difference	29
17	Spectrum Analyzer Display of Interfering Signal Noise Suppression (Power vs. Frequency)	30
18	Oscilloscope Display of ICS Response Time (Voltage vs. Time)	31
19	Setup for Testing Receiver Performance	32
20	Frequency Response of Field-Type Receivers	33

LIST OF ILLUSTRATIONS (Continued)

Figure		Page
21	Desired Signal Level Required for Interfering Signal at Various Frequency Separations	34
22	ICS Effect on Interference for RV-9 Receiver for 100-kHz Separations	35

INTRODUCTION

PURPOSE.

The purpose of this project at the National Aviation Facilities Experimental Center (NAFEC) was to perform test and evaluation of a modular interference cancellation system (ICS) produced by General Atronics Corporation, Philadelphia, Pennsylvania, under contract DOT-FA75WA-3611 with the Federal Aviation Administration (FAA), Systems Research and Development Service.

BACKGROUND.

In the field, there are numerous situations where avionic activity requires close spacing of communication frequencies which cannot be accommodated since strong signals from nearby transmitters overwhelm the signals to be received. This condition exists at remote center air-ground facility (RCAG) sites and other places where transmitters are collocated with receivers.

At these sites, the transmitted signal enters the receiver from its antenna, power lines, or directly. The antenna path is the predominant route for interference and is the condition dealt with in this report. A band-rejection filter can reject a close transmitter frequency, as can a band-pass filter, to select the desired receiver frequency signal. Tuneable band-pass cavity filters are employed in the field when deemed advantageous. (Radiofrequency (RF) interference through powerlines should be removed by low-impedance shunting, and direct reception prevented by adequate shielding of the unit itself.)

Another way to deal with a strong interfering signal at an adjacent frequency is by utilizing the method employed by the ICS device. The signal from a collocated transmitter is fed to the ICS device which produces and applies to the antenna a signal of opposite phase and amplitude equal to the signal picked up by the receiving antenna, and thereby cancels the interfering signal.

At sites where the transmitters are collocated with the receivers and it is desired to increase utilization of the frequency spectrum, this is the foremost application intended for the ICS. This is illustrated in figure 1.

DEVICE DESCRIPTION.

Four units were delivered, with one unit having the capacity to deal simultaneously with four interfering frequencies. This unit was tested at NAFEC. The other three models handle three, two, and one interfering frequency, respectively, and were appropriated for evaluation at field sites. All operate within the very high frequency (VHF) range assigned for air traffic control (ATC) communications (118 to 136 megahertz (MHz)). Because of loss in received signal due to tapped feedback, or placement of more receivers on an antenna, a compensating amplifier was specified and included with each unit of the ICS.

Photographs of the 19-inch rack-mounted ICS transmitter unit are reproduced in figure 2, and the receiver unit is shown in figure 3. An overall block diagram of the ICS at an RCAG site is shown in figure 4 (for the multiple input connection). The contractor was General Atronics of Philadelphia, subsidiary of Magnavox.

The input to the ICS is from a coupler, such that the transmitter output of up to 50 watts, is fed through the ICS coupler with less than 0.7 decibel (dB) (15 percent) insertion loss. The use of a 12-dB directional coupler (tapping 1/16th of total energy) was specially manufactured by Sage Laboratories. (Signals picked up by the transmitting antenna are reduced 32 dB.) This input tapped from the transmitter output is adjusted in amplitude and phase in a "complex weight" unit to accomplish cancellation of the interfering signal going to the receiver from its antenna. This is effected through a 4.5-dB directional coupler. A 20-dB directional coupler samples the output signal to be used as an error signal for feedback and continuous adjustment to change. A block diagram taken from the instruction book is reproduced as figure 5.

The nucleus of the device, the channel module, in a block diagram in the manual, is shown as figure 6. In the channel module, the interference signal sample from the transmitter is resolved into two quadrature components which are each applied through a separate attenuator. It is significant to note that these are pin diode bipolar attenuators which can also reverse the input, the overall range being -0.63 to +0.63 times the input. This enables the attainment of an output over a complete 360° electrical (sinusoidal) range which can be designated in polar or complex notation. The quadrature components are also each applied to a separate correlator to be mixed with the feedback error signal. Since these are at the same frequency, there are no sum and difference frequencies, and the effect taking place can be described as follows:

$\overline{S}_S$ = sample of transmitter interference signal

$\overline{S}_T'$ = transmitter signal picked up by receive antenna

$\overline{S}_C$ = correcting signal injected into receive antenna

$\overline{S}_E$ = error signal $(\overline{S}_T + \overline{S}_C)$

Total loop relationships for a simple single-frequency instantaneous steady state condition have been evolved for this report and are shown in figure 7. For the correlator with inputs $\overline{S}_S$ and 0.5 $\overline{S}_E$, taking $\overline{S}_S$ as reference designated by $E_S \sin w_1 t$ and S_E as $E_E \sin (w_1 t+\emptyset)$, the output is

$$E_S E_E/2 \; [\cos \emptyset - \cos (2 w_1 t+\emptyset)]$$

For the correlator with inputs $j\overline{S}_S$ and 0.5 $\overline{S}_E$, the output is

$$\frac{E_S E_E}{2} \cdot [\sin \emptyset + \sin (2 w_1 t+\emptyset)]$$

Not shown in figure 7 is a low-pass filter between each correlator and the variable attenuator it serves so that the double frequency component (at $2\ w_1 t$) is eliminated in each case. The output remaining is $(E_S E_E/2)\cos \emptyset$ from one correlator and $(E_S E_E/2)(\sin \emptyset)$ for the other, both constants, or direct current (d.c.), terms reversed in sign by an odd number of amplification stages.

An equation for the loop with feedback is given as follows:

$$\overline{S}_C + \overline{S}_T' = \overline{S}_E$$

$$[\overline{K}E_S(\sin w_1 t)\ \frac{E_S E_E}{2} \sin \emptyset + \overline{K}E_S(\cos w_1 t)\ \frac{E_S E_E}{2} \cos \emptyset] +$$

$$\overline{K}' E_S \sin w_1 t = E_E \sin (w_1 t + \emptyset)$$

where, $\overline{K}$ is a complex constant to encompass attenuation and phase shift taking place between transmitting signal $\overline{S}_T$ and point of combining to form $\overline{S}_C$, while $\overline{K}'$ encompasses attenuation and phase shift taking place between respective points on transmitting lines to account for difference between S_T and point of combining with S_C.

A graphic representation is shown by the vector diagram of figure 8. In operation, $\overline{S}_E$ would be close to zero, since feedback is continuous and the dotted vector resultant opposing $\overline{S}_T'$ in direction and magnitude can be expected.

TEST PROCEDURES AND MEASUREMENTS

Tests were conducted at NAFEC experimental RCAG, building 176, where appropriate transmitters and receivers and antennas were available. Figure 9 is a photograph which shows the transmitter exciter (T-1108) and amplifier (AM-6154/GRT20) at the bottom of the rack and HP-200 ABR audio oscillator for test modulation in the center of the cart at left. Above the two pairs of transmitter units are two fixed-tuned receivers AN/GRR-23, and at the top are two of the four ICS transmitter units.

A photograph (figure 10) (rear of building 176) shows the antenna tower arrangement. Swastika and coaxial antennas on each tower are the VHF transmitter and receiver antennas.

The technical evaluation requirements of the ICS itself, as encompassed in (1) through (8) in the appendix and, in general, were consolidated into the four basic areas which follow:

ICS EFFECTS ON TRANSMISSION.

A block diagram as a composite of test setups for making measurements related to transmisssion is shown as figure 11. At a nominal 50 watts and 50-percent modulation, the voltage standing wave ratio (VSWR) in the line from transmitter to antenna was measured at 1.065. Subsequent measurements with the ICS connected and modulations up to 90 percent indicated a maximum VSWR of 1.16 (at 10 watts) and 1.082 at corresponding power and modulation (50 watts, 60 percent).

Making allowance for cable loss (0.5 dB per 20 feet of RG-9/U, from chart and measurement over the frequency range specified) from transmitter to ICS transmitter unit, the amount of the total transmitter power lost in the ICS is within the 15 percent specified, with 10 percent found to be typical. Approximately 5 percent was available at the 0-dB output of the ICS transmitter unit.

It is also appropriate at this point to note the maximum levels of interference signals obtainable at the NAFEC test site. Antenna separations and cable lengths and types need to be recorded, in order to evaluate and apply results. The antenna towers are 50 feet high and form corners of a square with separations of 80 feet (and therefore a diagonal distance of about 115 feet). Totals are approximately 180 feet of cable to transmitting antennas and 170 feet to receiving antennas (with 220 feet of spirofoam and balance of RG-9/U). Therefore, the minimum possible path (for antennas on the same tower) is approximately 350 feet, with 80 or 115 feet spatial distance added for separate towers (which would be the case, in practice, if there is a choice). The equivalent length (l_{eq}) in RG-9/U for the larger total in terms of propagation velocity is:

$$\frac{l_{eq}}{0.66\ V_S} = \frac{220}{0.81\ V_s} + \frac{130}{0.66\ V_S} + \frac{115}{V_S} = 385 \text{ feet (117 meters)}$$

where, V_S = free-space velocity

This figure is of importance in regard to the audio of the interfering signal to be suppressed as related to the length of line needed between the ICS transmitter unit and the receiver unit plus the antenna spacing.

For a maximum transmitter output of 80 watts, the levels of interfering signal received were found to be approximately +11 dBm when using antennas on the same tower, and they were all less than 0 dBm when using different towers. It is also important to note that for 10 watts at the transmitter, when both antennas on the same tower were used, the interfering signal received was down 10 dB, reduced approximately as much as expected for the transmitter power ratio (9 dB). (It is also noted that the ICS was out of the system and none of the transmitter power was diverted in that device.)

ICS EFFECTS ON RECEPTION.

A composite setup for these tests is shown as figure 12. It is required that the desired signal be minimally degraded by the ICS and that there are two conditions to be considered; the single and the multiple output.

For the single-output connection, the loss of carrier measured over the frequency range of 118 to 136 MHz and levels from -80 dBm up to +10 dBm varied from 1 to 3 with an average of -2.1 dBm. For the multiple output, an amplifier is employed which had a gain of +10 dB with no detectable variation (within $\pm$0.1 dB) over this frequency range. While applicable tests were applied to the amplifier, the overall performance (antenna input to multiple output) is paramount. For this connection, the response was flat from 110 to 140 MHz and the half-power points were at 11 and 153 MHz. For single output, response was flat from 90 to 140 MHz. The net gain varied from zero to +3 with an average of +1.8 dB. Placing loads (50 ohm) on one or more of the four multiple outputs did not affect the output level being measured at any one.

Harmonic distortion was measured for the GRR-23 receiver itself and then in conjunction with the antenna input and single and multiple outputs and the amplifier alone for seven audio inputs from 300 to 3000 Hz. (Distortion factor equals the square root of the quotient of total harmonic root mean square (rms) divided by the total harmonic rms plus the rms of the fundamental, which was read directly.) For 30-percent modulation (of the 133.125 tuned receiver frequency) and 50-microvolt (μV) carrier (rms), to avoid greater noise predominance at lower levels, the receiver by itself had an audio distortion factor of 4.65 percent (which includes the signal source harmonic output) as derived by employing a straightforward geometric mean of the seven readings. Overall audio distortion with the antenna input and multiple output inserted was 4.84 percent and for the single output 5.31 percent. (For the ICS amplifier inserted alone the reading was 2.52 percent.) Since a receiver is used in practice, the action of the multiple, single, and amplifier can be appropriately expressed as factor of 1.04, 1.14, and 0.75 (the rf amplifier actually reducing harmonic content).

Spurious outputs for an 0-dBm unmodulated carrier at midband (127 MHz) were found at approximately 125.5, 126.8, 127.1, and 127.5 MHz at levels of -82, -79, -76, and -84 dBm, respectively, for the antenna input and mulitiple output connection. For the single output connection, spurious signals were found at approximately 124.5 and 125.5 MHz and were both -86 dBm. (For the amplifier alone, spurious signals were found at 123, 124, 130, and 132 MHz at levels of -84, -82, -83, and -84 dBm.)

Intermodulation products were obtained for two -10 dBm inputs, one at 127 MHz (f_1) and the other (f_2) at 14 intervals over a range from 123 to 131 MHz. For the antenna input and multiple output connection, $2f_1-f_2$ averaged -70.86 dBm with a standard deviation of 3.37 and a maximum of -65 dBm, and $2f_2-f_1$ averaged -62.64 dBm with a standard deviation of 8.98 and a maximum of -55 dBm. For the single output connection, $2f_1-f_2$ averaged -71.36 dBm with a standard deviation of 3.43 and a maximum of -63 dBm, and $2f_2-f_1$ averaged -67.29 dBm

with a standard deviation of 5.33 and a maximum of -61 dBm. (For the amplifier alone, $2f_1-f_2$ averaged -62.36 dBm with a standard deviation of 3.39 and a maximum of -54 dBm, and $2f_2-f_1$ averaged -62.36 with a standard deviation of 3.88 and a maximum of -53 dBm. For amplifier alone at 0 dBm input, $2f_1-f_2$ averaged -46.86 with a standard deviation of 2.19 and $2f_2-f_1$ averaged -32.0 with standard deviation of 11.64.)

Cross modulation (crosstalk) was evaluated as the ratio of the percent modulation produced in an unmodulated carrier to the percent modulation of a carrier at another frequency. (Taking the letter at 127 MHz and 90-percent modulation and the former at frequencies over the VHF range at 50 KHz and multiple intervals, for both single and multiple outputs, cross modulation was found to be much less than 1 percent.)

VSWR (taken at midrange frequency of 127 MHz) was 1.015 in the setup prior to ICS insertion and rose to 1.22 for single output and 1.04 for multiple output, both with the ICS ON. (Readings were 1.22 and 1.18, respectively, with ICS OFF.)

The field-type VHF receiver GRR-23 here was found to have a sensitivity of 3 μV (with squelch OFF--the more sensitive condition), which is also the nominal value. With the ICS receiver ON and placed before the radio receiver, the sensitivity became 4.6 μV for single ouput and 5 μV for the multiple output.

Employing the same receiver in order to measure noise figure with the available test equipment, the unit by itself read 18 dB. Inserting the ICS receiver before the radio receiver, the overall readings were 25 and 18 dB for the single and multiple outputs, respectively. (With the amplifier by itself inserted, a noise figure of 10 dB was indicated.) The noise figure for the ICS itself can be calculated from

$$F_{ICS} = F_{overall} - \left(\frac{F_{Receiver}-1}{ICS\ gain}\right)$$

where F is the noise figure ratio and using the gains above gives a very approximate 23.3 dB for the single output, 13.4 dB for the multiple output, and only 5.8 dB for the amplifier by itself.

INTERFERING SIGNAL REDUCTION.

A composite setup for these tests is shown as figure 13.

A significant requirement for specified performance of the ICS is that the interfering signal to the reference input be at least 20 dB above the level received at the antenna input of the ICS receiver. Therefore, for the specified maximum interfering signal of +10 dBm, the reference input shall be at least 1 watt. Tests established that this 20-dB requirement was an exact threshold for full interfering signal cancellation and that operation extended down to as little as 0.02-watt reference input for interfering signals of -7 dBm or less. (This reference power would correspond to a transmitter power level of a fraction of a watt, far below any required practical level, and the 0 dB transmitter unit is employed.)

The requirement for cancellation down to at least -45 dBm (for single output) is the most formidable for the maximum +10-dBm signal. However, there is actually little further decrease in ICS interfering signal output with lower interfering input signals. For example, taking 24 values at random from measured data over the range of -40 to +10 dBm and 30- to 90-percent modulation using the single-output connection, the following statistical descriptors were determined for dBm of carrier <u>and</u> sidebands:

Using the equation, $$\text{dBm} = 10 \log\left(10^{\frac{-\text{dBm}_c}{10}} + 10^{\frac{-\text{dBm}_{\ell s}}{10}} + 10^{\frac{-\text{dBm}_{us}}{10}}\right)$$

where c designates carrier and ℓs and us lower and upper sidebands,
mean = -48.9 dBm
standard deviation = 2.4 dBm

No significant reduction was found for low-end interfering inputs where, for example, 15 readings at -37 and -38 dBm had a mean of -49.1 and a standard deviation of 1.37. This is illustrated in the figure 14 spectrum analyzer displays. On top is a linear display with the carrier and sidebands near the base at right of center and the unsuppressed off the screen, while the other is a logarithmic display showing carrier suppressed to -57 dBm and sidebands to -50 dBm.

Considering the carrier alone, sufficient or greater cancellation was invariably the case when the reference voltage was $\geq$ 30 dBm, and +10 dBm was not exceeded at the ICS antenna input, in as much as the latter was found to be an exact threshold above which not more than a 10- or 20-dB reduction in interfering signal could be expected. When modulated, however, the sidebands in marginal cases of carrier attenuation sometimes ranged from -7 dB to 0 dB below the carrier. Therefore, taking the total power of the attenuated signal, the sidebands increased power by 2.0 to 4.8 dB. (However, this is partially offset, since the maximum interfering signal amplitude should also take into account the power inherent in the modulation.)

The contractor's proposal contained a mathematical derivation for "cancellation notch" which is of general significance, and expressions therefrom are given here as follows:

$$V_o(f) = V_I(f) + W V_R(f) = V_I(f) + WKV_I(f)e^{-j2\pi f\tau}$$

$$V_o(f) = V_{I_1}(f_o)\left[1+WKe^{-j2\pi f_o\tau}\right] + V_{I_2}(f_o+\Delta f)\left[1+WKe^{-j2\pi(f_o+\Delta f\tau)}\right]$$

where, $V_o(f)$ = ICS output,

$V_I(f)$ = antenna input, subscript 1 for the f_o component and 2 for the $(f_o+\Delta f)$ (modulation) component.

$V_R(f)$ = reference input

τ = time difference between reference and ICS antenna input,
W= complex weight to produce cancellation, and
K= complex scale factor.

For cancellation of f_o component, first term is designated as zero and therefore

$$wKe^{-j2\pi f_o \tau} = -1, \text{ and } \quad V_o(f) = V_{I_2}(f_o+\Delta f)(1-e^{-j2\pi\Delta f\tau})$$

Carrier frequency signal cancellation was determined (for a feedback voltage gain of 2,000) to yield about -65 dB. For -55 dB cancellation of 3-kHz sidebands, τ was derived as required to be not greater than approximately $(10)^{-7}$ second. This is equivalent to about 65 feet of RG-9/U cable, which is expected to be used to conform to the reference.

Because the reference cable length required is an important condition for operation, measured cancellation of carrier and sidebands corresponding to path difference and maximum interfering signal input of 10 dBm is plotted in curves shown in figure 15. (Just as the cancellation signal dBm levels should be considered to include sidebands, so must the level of input with modulated carrier.) The curve for the sidebands average loses 13.5 dB of cancellation for 280 feet of cable difference. (This conforms with the calculated value which would be -42.5 dB at 280 feet compared to -55 dB at 65 feet.) In employing a cable to the ICS reference input of length sufficient to attain desired sideband attenuation, the cable loss must be considered (2.5 dB per 100 feet for RG-9/U) in view of required reference input level to the ICS receiver. Carrier attenuation, as shown in the curve, depends on path difference and varies in a sinusoidal fashion. Therefore, measurements were made over a segment of path difference corresponding to about one wavelength for RG-9/U cable (4.9 feet at 133 MHz). This is plotted in figure 16. Also plotted are the maximum values of interfering signal for which specified cancellation is attained. (It includes 2 dB for sideband power corresponding to the 90-percent modulation which was used.) Results show variations with length change so that an optimum length may be obtainable, but a cut-and-try empirical method is indicated as the practical avenue of approach.

Employing noise modulation, cancellation over a bandwidth of +10 kHz was effected from an average central level of -15 dB down to a level of -65 dBm. A display on the spectrum analyzer was photographed and is shown in figure 17. Estimated total power for the spectrum analyzer over this noise band for the following reduction is -46.8 dBm. The carrier was reduced from +8 ($\pm$10 dBm into the ICS) down to -60 dBm.

While it is essential to attenuate modulation frequencies of the interfering signal, it is necessary not to interfere with desired signals. Taking so-called noninterfering signals along with an interfering signal, no effect on the former was noticeable for separations exceeding 25 kHz, nor on the cancellation of the latter.

Simultaneous multiple interfering signal cancellation was checked using signals over the spectrum at 118.15, 132.025, 133.125, and 134.7 MHz with two separated by only 100 kHz. High levels were sought and those received at the ICS input were +4, -33, -5, and -22 dBm for the above frequencies, respectively. The carriers of these were respectively reduced to -58, -54, -56, and -52 dBm for the single output and to approximately the same levels for the multiple outputs.

To determine response time, the transmitter was turned ON to trigger the oscilloscope while the output (single) of the turned ON ICS was also applied. The oscilloscope was set for a single scan with camera attached. A photograph is shown in figure 18. The time span between triggering and ICS output for a large number of trials varied from approximately 1/2 to 3 1/2 milliseconds (ms) which was probably dependent on the instant of turning ON the transmitter. Full attenuation of the modulated signal occurred almost invariably within another millisecond for the single output and 8 milliseconds for the multiple output.

In order to check ICS operation with transmitter instability, a frequency-modulated generator was employed. Taking the carrier at 120 MHz, with deviations from 200 to 2,000 Hz at a rate of 20 to 200 Hz and input levels to the ICS from -10 dBm to the maximum of +10, the interfering signal (carrier) was suppressed over a range from -47 dBm to -57 dBm.

To simulate an echo, two parallel paths were taken to the ICS antenna input with incremental differences in length between them over the wavelength distance in the cable. At the single output, for a maximum input (10 dBm) to antenna, the carrier ranged from -48 to -60 dBm, and the sidebands, from -44 to -61 dBm.

During particular transient test conditions, the ICS was sometimes found to operate at much less than specified cancellation, and although this condition might not occur in field use, it constituted a potential liability. Inquiry to the manufacturer resulted in the suggestion that the R-21 resistors on cards A-4 and A-5 in each channel, which were each 1,000 ohms, be replaced with 2,000-ohm resistors. When this was done, that malfunction was completely eliminated. However, the response time for cancellation to take effect increased from a maximum (which is for the multiple output connection) of approximately 8 ms to 12 ms - which is still acceptable and well within the specified allowance.

STANDARD RECEIVER RESPONSE TO INTERFERING SIGNAL.

The test setup for evaluating response of the GRR-23 and RV-9 receivers is shown in figure 19.

In order to properly use the ICS and know what to expect, receiver response to signals should be known. Typically, contemporary VHF receivers at field sites are the fixed-tuned AN/RV-9 and the more recent solid state AN/GRR-23 and measurements were made for them.

For a single signal, the amplitudes necessary to produce an audible output at frequencies around that to which the receivers are tuned are plotted in figure 20. Voltage values have been converted to equivalent power levels in dBm for plotting purposes and general consistency. The GRR-23 sensitivity was half its nominal value, and the RV-9 is nominally 5 μV. As expected, the GRR-23 frequency response is narrower than the FAA RV-9. (Although shown around a common f_o, the tuned frequencies were 133.125 and 127.87 MHz, respectively, corresponding to the crystals available.)

However, more significant curves are shown in figure 21. This shows the level of desired signal at the central, tuned frequency f_o necessary in the presence of an interfering signal at 0 dBm (the maximum practical level which can be expected) that results in an audio output of 3-to-1 voltage (10-dB power ratio) for desired-to-undesired tone. (The tones were 1 and 2 kHz, respectively, with 50-percent modulation. Although f_o is common to both, it was 133.125 MHz for the GRR-23 and 118.15 MHz for the RV-9. The latter was used because that receiver performed better than the one with the 127.87-MHz crystal of figure 20 in order to optimize comparison to the GRR-23.) The curves show, for example, that when an interfering signal is 50 kHz or more away from the GRR-23 tuned frequency, the desired signal need only be 5 μV. However, even at 200-kHz separation, the required signal for the RV-9 needs to be at least 400 μV.

Since the RV-9 receiver requires reduction of interfering signals to even extend beyond 200 kHz, an examination of ICS performance is presented in figure 22 for various interfering signal levels with the required threshold level of desired signals to provide an audible output. These curves can be used to estimate requirements for a given field application, in this case for a RV-9 tuned 100 kHz away from an interfering signal. If, for example, the interfering signal is at its maximum of ±10 dBm, then the ICS can be expected to reduce it to at least -45 dBm. For the single-output connection, the corresponding minimum desired signal required is -75 dBm or 40 μV. For 50 kHz, extrapolating the difference between 100 and 50 kHz of 4 dB from figure 21 and applying this at the -45 dBm level in figure 22 to increase the required desired signal by that amount, an approximate value for this signal is -71 dBm or 63 μV.

SUMMARY OF RESULTS

The essential ICS function of reducing an interfering signal level up to +19 dBm from collocated transmitters down to -45 dBm or lower was satisfied in accordance with the specification. However, zero dB interference is the maximum that should generally exist. However, there is little further reduction of interfering signal by the ICS for lower input levels. Using a rigorous definition to include sideband power, the mean for measurements over the gamut of conditions was found to be -48.9 dBm and -49.1 dBm for inputs down near -40 dBm.

The tested unit effectively reduced four input interfering signals simultaneously. It was unaffected by transmitter frequency instability or by a concurrent echo of the received interfering signal. Prescribed attenuation always occurred within approximately 12 ms after receiving the interfering signal (following modification described below). The unit did not affect non-interfering signals which were separated 25 kHz or more, and totally reduced a band of noise over a spectrum of $\pm$10 kHz about a designated interfering signal carrier from a total noise power of -5 dBm to a total noise power of -47 dBm.

As delineated in the contractor's original proposal, the different transit time between input to the ICS reference and to ICS antenna input affects the degree to which unwanted sidebands are reduced. At the NAFEC test site, which can be considered reasonably representative with regard to distances, approximately 200 feet (61 meters) of RG-9/U cable is the minimum required to maintain expected reduction of the sidebands to at least -45 dBm total power (for the multiple output case). An invariable requirement for the operation of the unit as designed is that the reference input be at least 20 dB greater than the level of the interfering signal to the ICS antenna input. For the engineering requirement (ER) designated upper level interfering signal of +10 dBm, a minimum of 1 watt is required at the reference input. Two hundred feet of cable mentioned above comprise a loss of approximately 5 dB and a 3-watt requirement from the ICS transmitter unit and, based on measurements, 20 times this amount of transmitter power or 60 watts. However, a 10-dBm level of interfering signal is unlikely. With a more realistic maximum of 0-dBm, only 1/3 watt is required, which corresponds to only 7-watt operation of the transmitter (for the zero-dB ICS resistance output), and no difficulty need be expected from cable length to the reference input. For transmitter operation above 40 watts, the ICS transmitter unit tap needs to be changed from 0 dB to -3 dB.

Occasional erratic diminution of cancellation was eliminated by substitution of a 2,000-ohm (1/4-watt) for the 1,000-ohm R-21 resistors on the A-4 and A-5 cards in each channel. VSWR in the transmission line from the transmitter to its antenna increased from 1.065 to 1.082 and was therefore well within that specified.

At the receiver end, the ICS typically causes a 2-dB drop to signals from the antenna, when using a single output, and provides a gain of 2 dB, when using the multiple outputs, which is flat and independent of the number of receivers used.

Spurious outputs were all lower than -75 dBm, intermodulation products were lower than -55 dBm for single and -65 dBm for multiple outputs, and cross modulation was much much less than 1 percent for either output. VSWR which was initially 1.015 became 1.04 for multiple and 1.22 for single-output connection. Sensitivity level for a GRR-23 receiver decreased from 3 μV to 4.6 and 5 μV for single and multiple outputs, respectively, while the noise figure increased about 7 dB for the former and remained the same for the latter. With the same receiver, audio distortion increased negligibly for multiple and single outputs (0.2 and 0.65 percent).

Tests on two main VHF receivers in field use, the RV-9 and AN/GRR-23, disclosed that the latter could operate in the presence of a zero-dBm interfering signal at least 40 kHz away, while the former required at least a 400-μV signal when an interfering signal 200 kHz away was present. With the ICS however, in the presence of an interfering signal of +10 dBm separated by 100 kHz, only a 40-μV signal is needed for reception.

2 CONCLUSIONS

From the results, it is concluded that:

1. The ICS four-channel unit manufactured by General Atronics Corporation reduces signals up to +10 dBm total power down to -45 dBm or lower and performs as specified in other respects as stipulated in the engineering requirement (ER), but requires 2,000-ohms (1/4 watt) for R-21 on A-4 and A-5 cards in each channel.

2. The ICS receiver single-output connection has the advantage of allowing continuous operation with ICS failure, but otherwise the multiple-output connections are preferable, even for a single-channel case.

3. The ICS device could be used at field sites to enable reception by the GRR-23 down to 5 μV with a collocated transmitter operating at a frequency only 25 kHz away and for a RV-9 receiver down to 65 μV at 50-kHz separation and 40 μV at 100-kHz separation.

4. In order to enable reception of signals down to the threshold sensitivity level of receivers such as the RV-9, it is necessary to insert a selective filter before the receiver, or increase receiver selectivity directly, to effect further reduction of the interfering signal following the ICS, since its reduction into the ICS has but a slight effect.

RECOMMENDATIONS

From the conclusions, it is recommended that:

1. The R-21 resistors on the A-4 and A-5 cards for each channel should be 2,000-ohms (1/4 watt) in place of the 1,000-ohm resistors on the units received at NAFEC and these contemporary units placed in field sites to alleviate collocated transmitter-receiver interference for which they were designed.

2. The future ICS should be designed to reduce interfering signals down to -60 dBm instead of the present -45 dBm in order to enable full effectiveness with any receiver in use. Offset this increased demand in performance by simplification of the ICS by stipulating a realistic zero-dBm upper limit for the interfering signals, an upper limit of collocated transmitter power of 40 watts, and elimination of the single output.

3. An auxiliary unit, with appropriate selectivity, amplification, and threshold should be provided for input to the ICS reference of signals received by radiation rather than only from cable connected to collocated transmitters to enable reduction of all strong signals received.

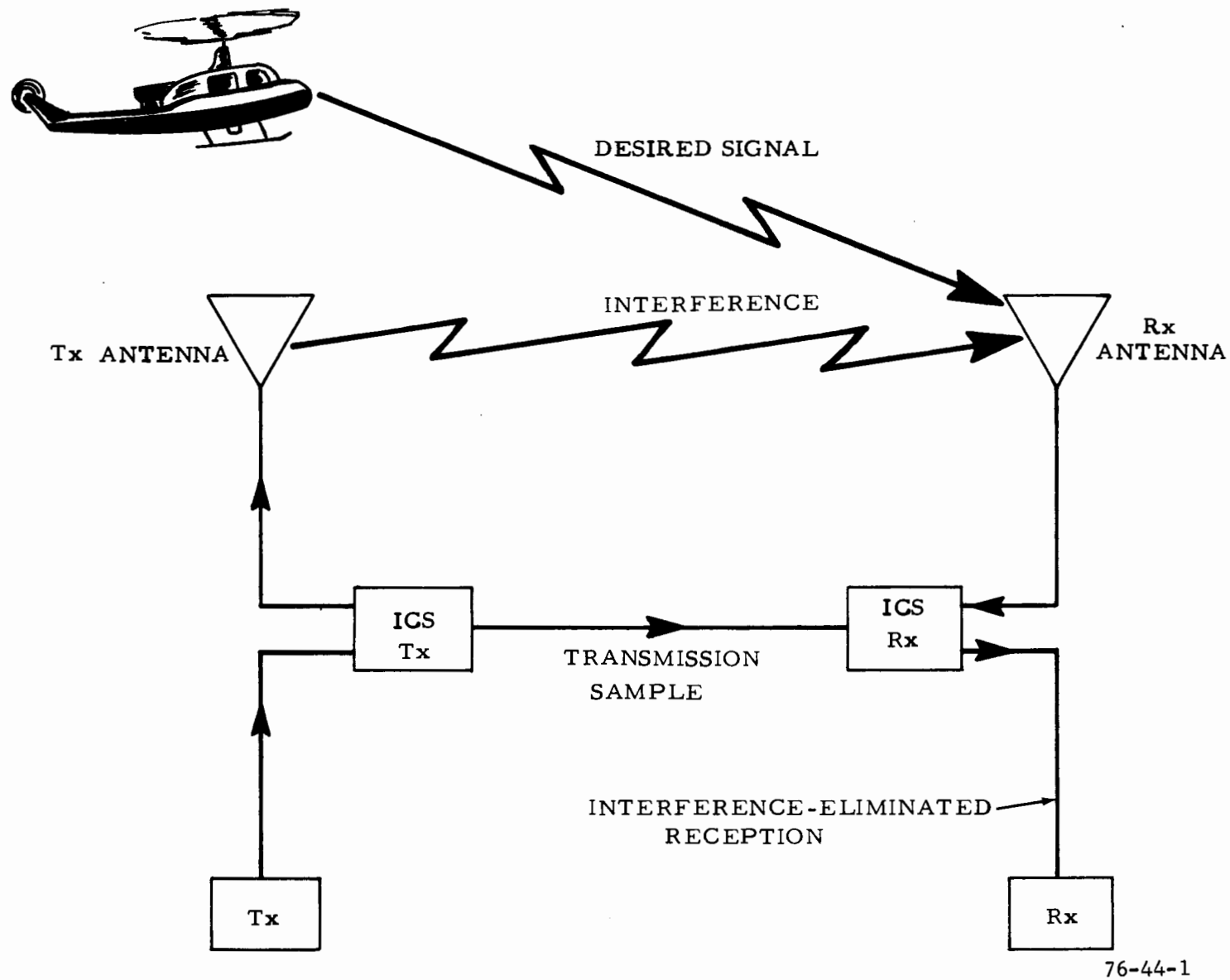

FIGURE 1. OVERALL REPRESENTATION OF ICS

A. FRONT VIEW

B. REAR VIEW

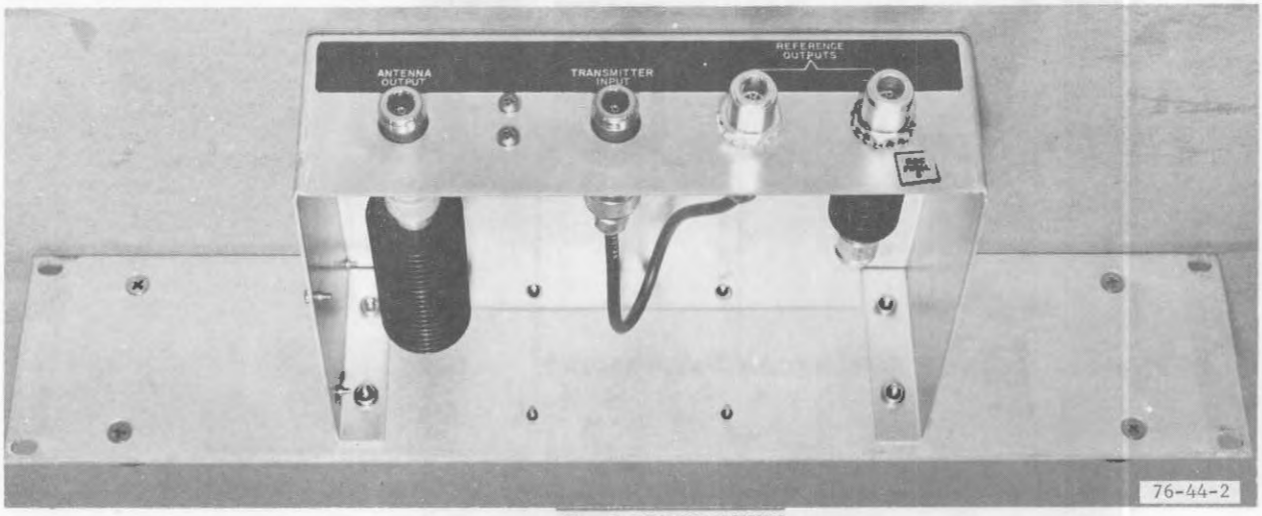

C. BOTTOM VIEW

FIGURE 2. ICS TRANSMITTER UNIT

FAA WJH Technical Center
00093013

A. FRONT VIEW

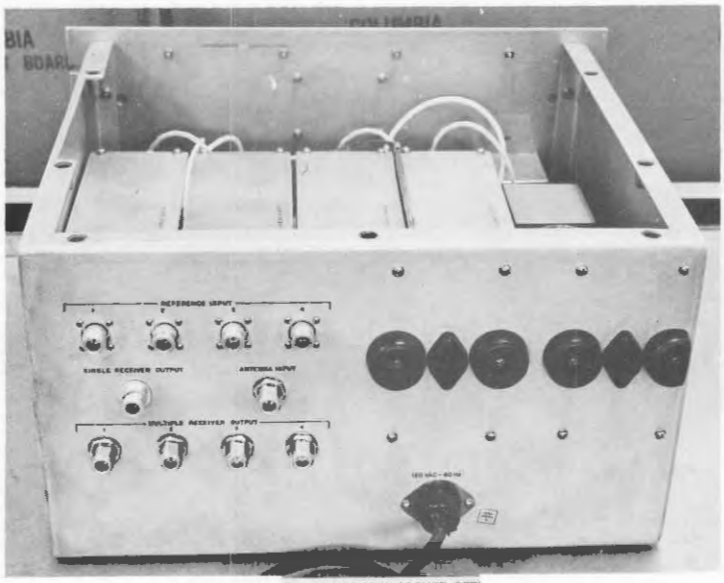

B. REAR VIEW (COVER OFF)

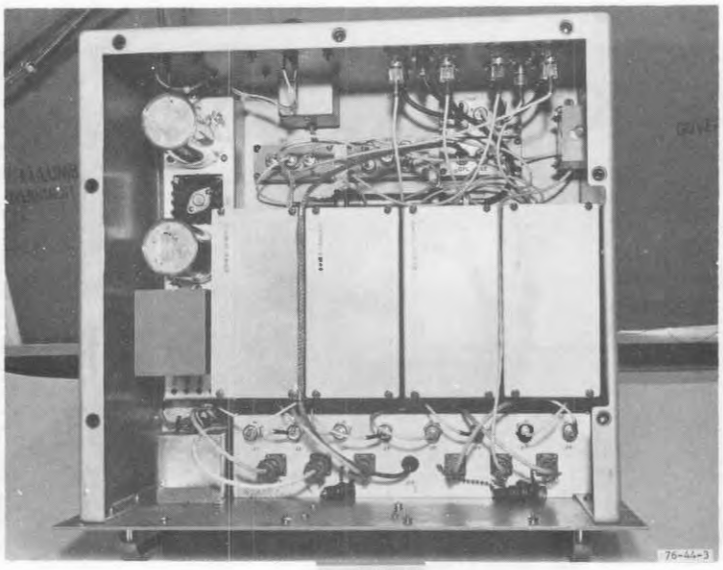

C. TOP VIEW

FIGURE 3. ICS RECEIVER UNIT

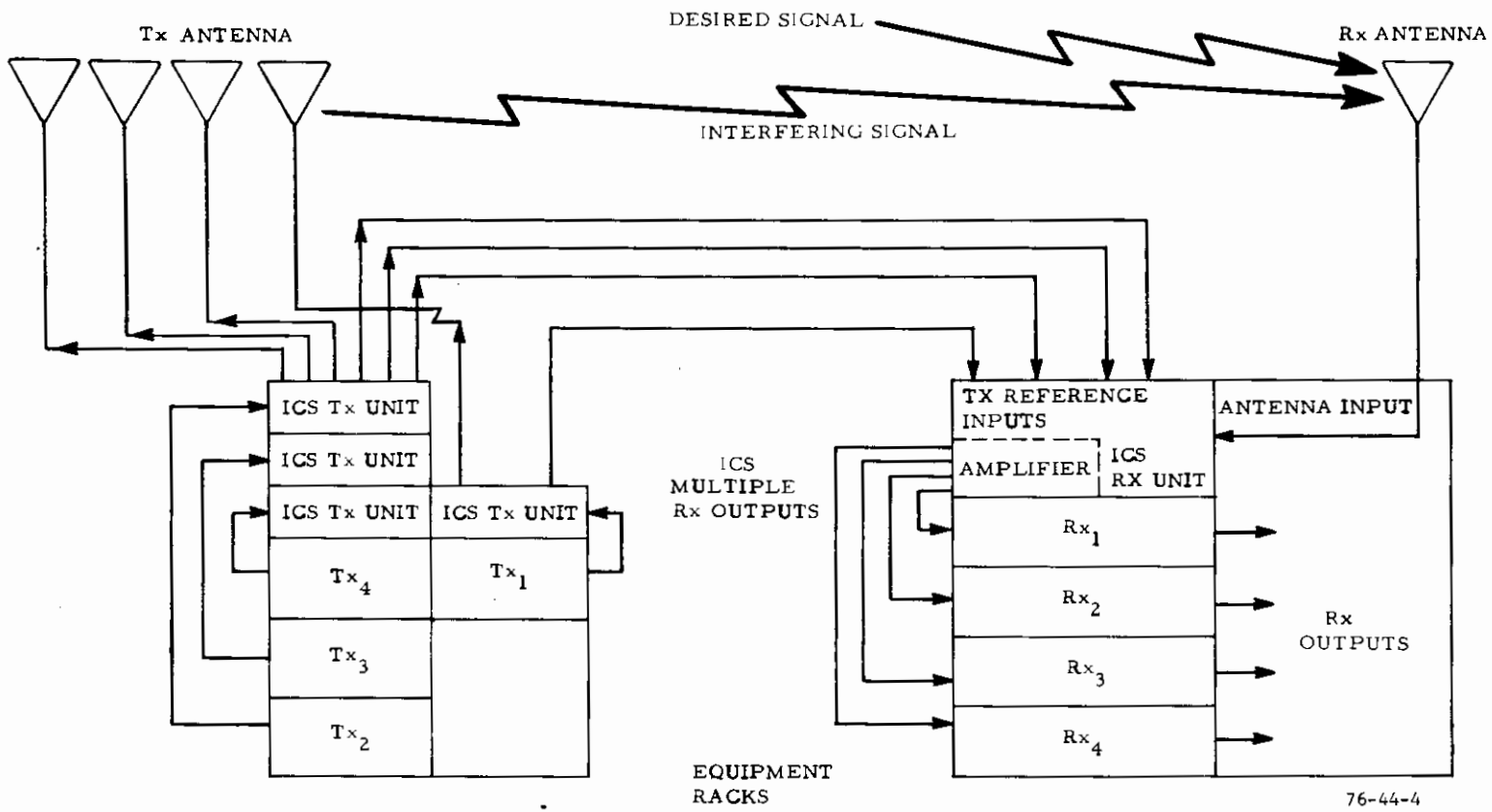

FIGURE 4. ICS AT RCAG OR OTHER SITES

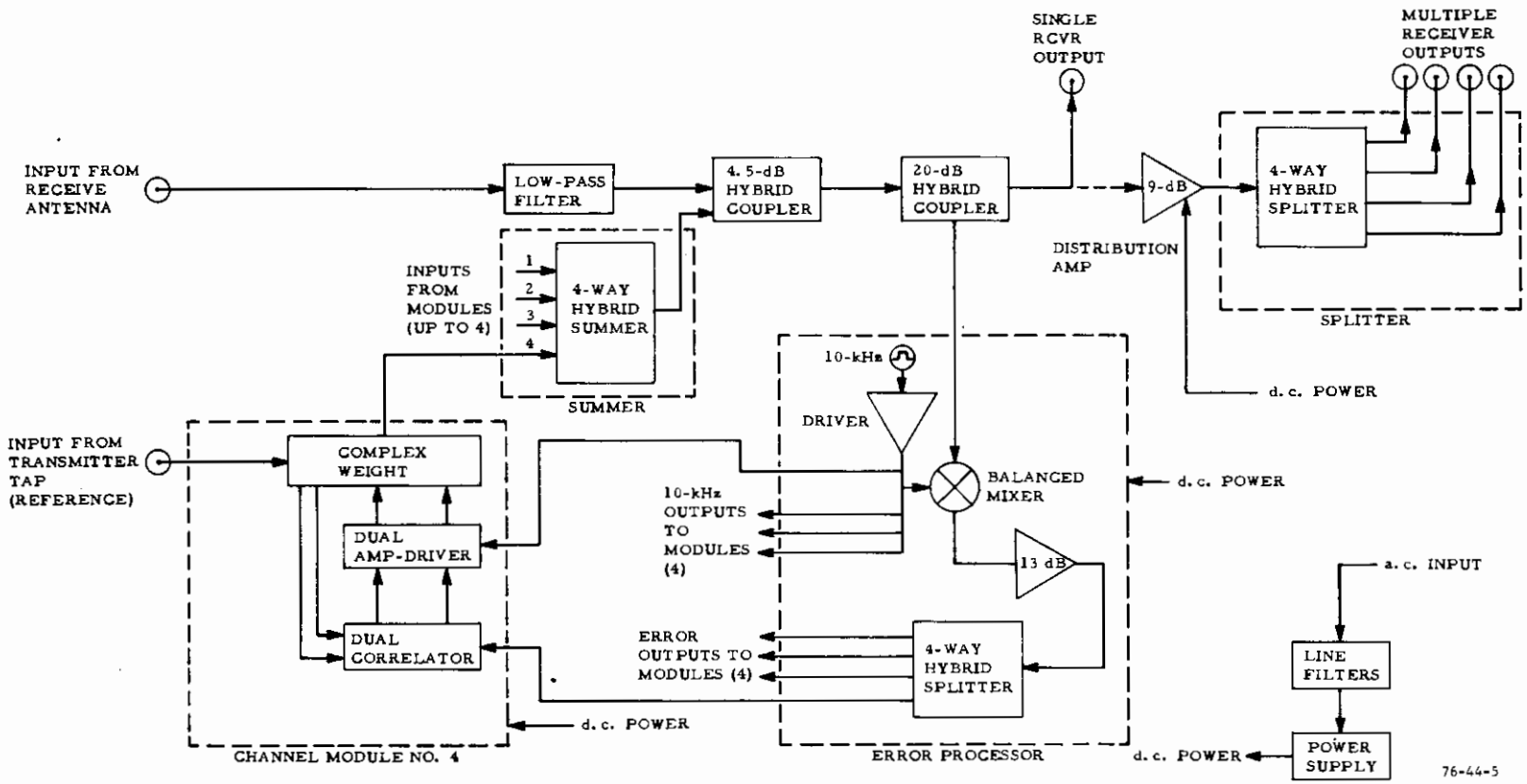

FIGURE 5. BLOCK DIAGRAM OF VHF ICS RECEIVER UNIT

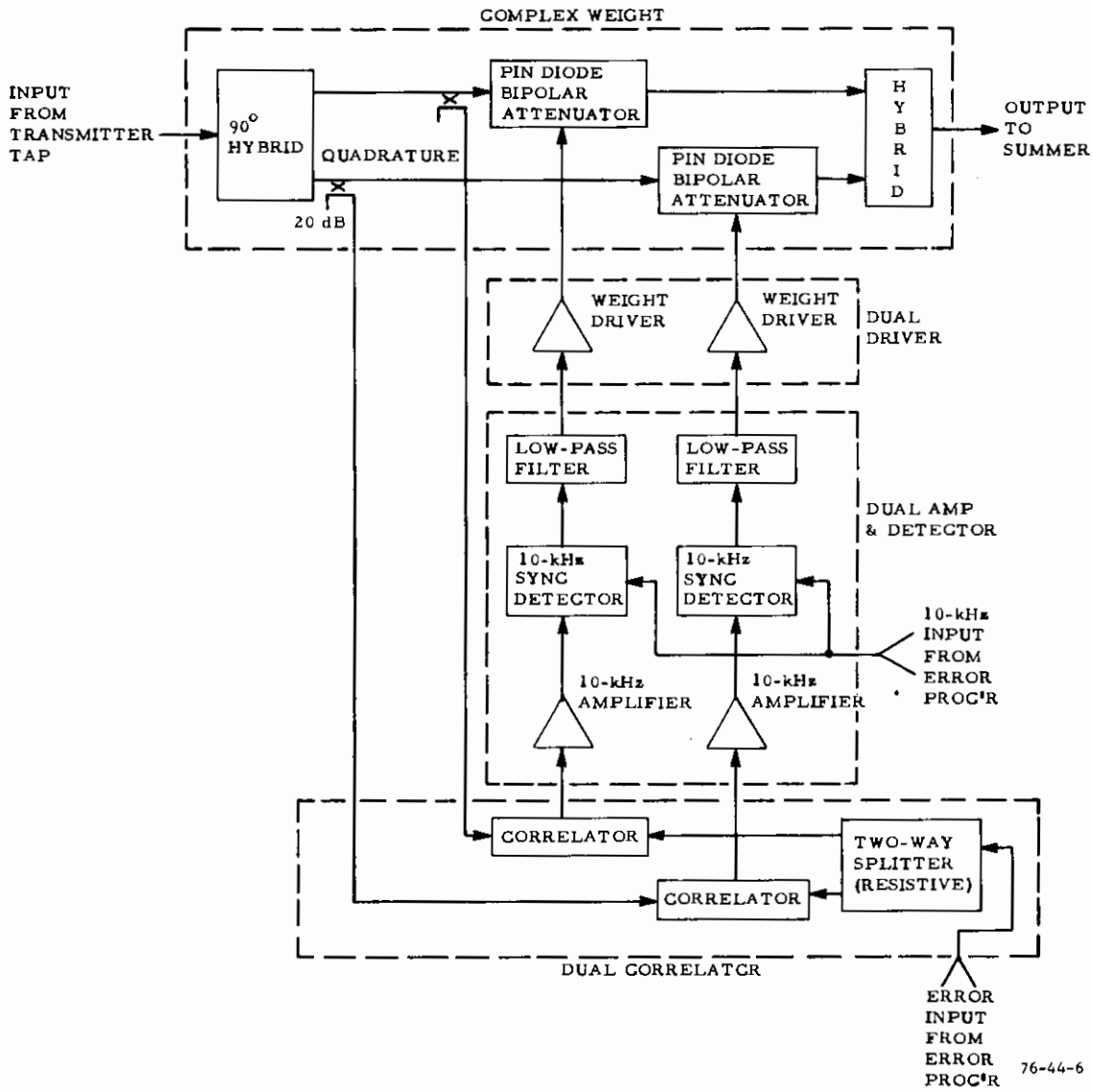

FIGURE 6. CHANNEL MODULE BLOCK DIAGRAM

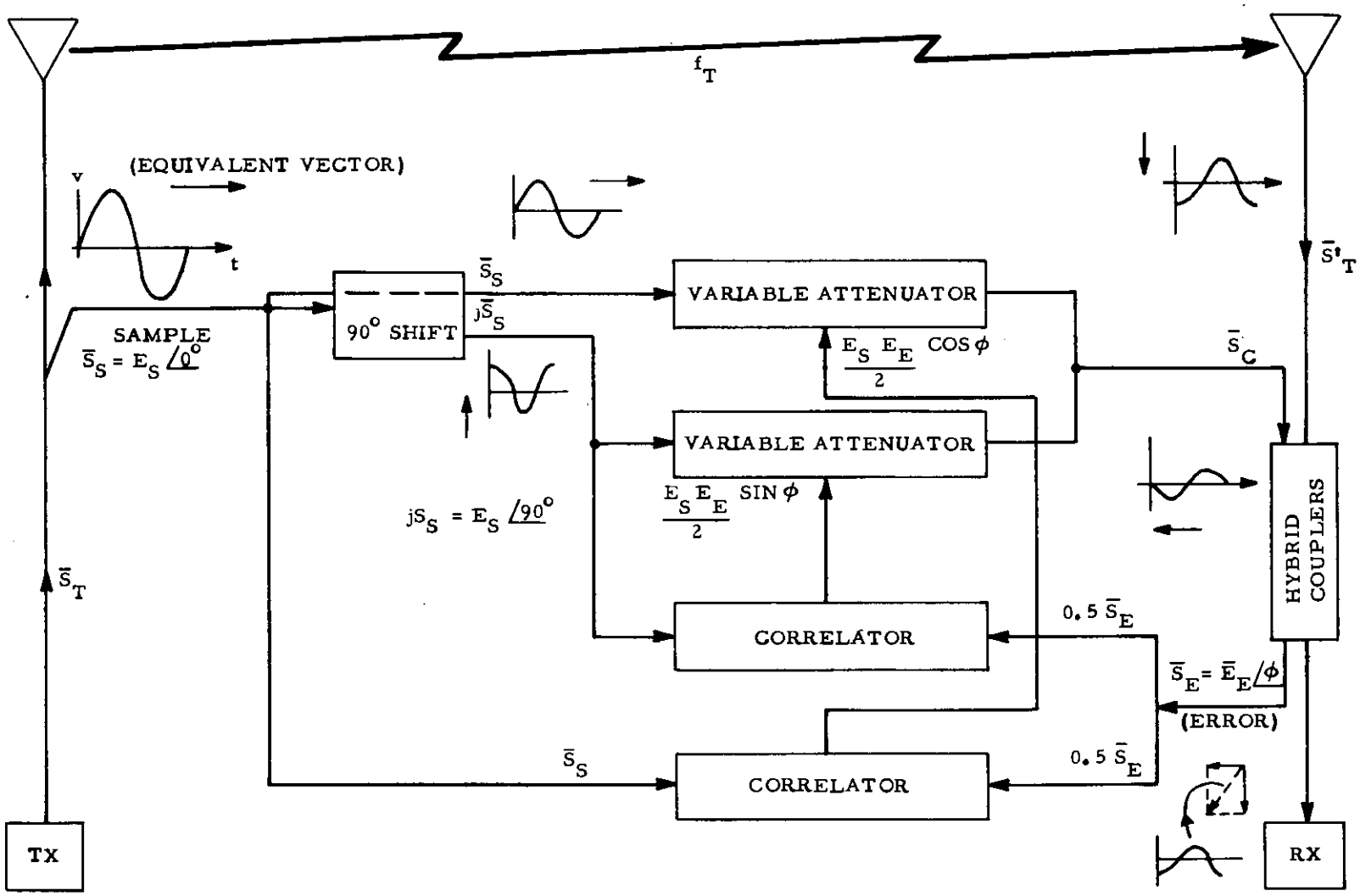

76-44-7

FIGURE 7. ILLUSTRATION OF CANCELLATION LOOP RELATIONSHIPS

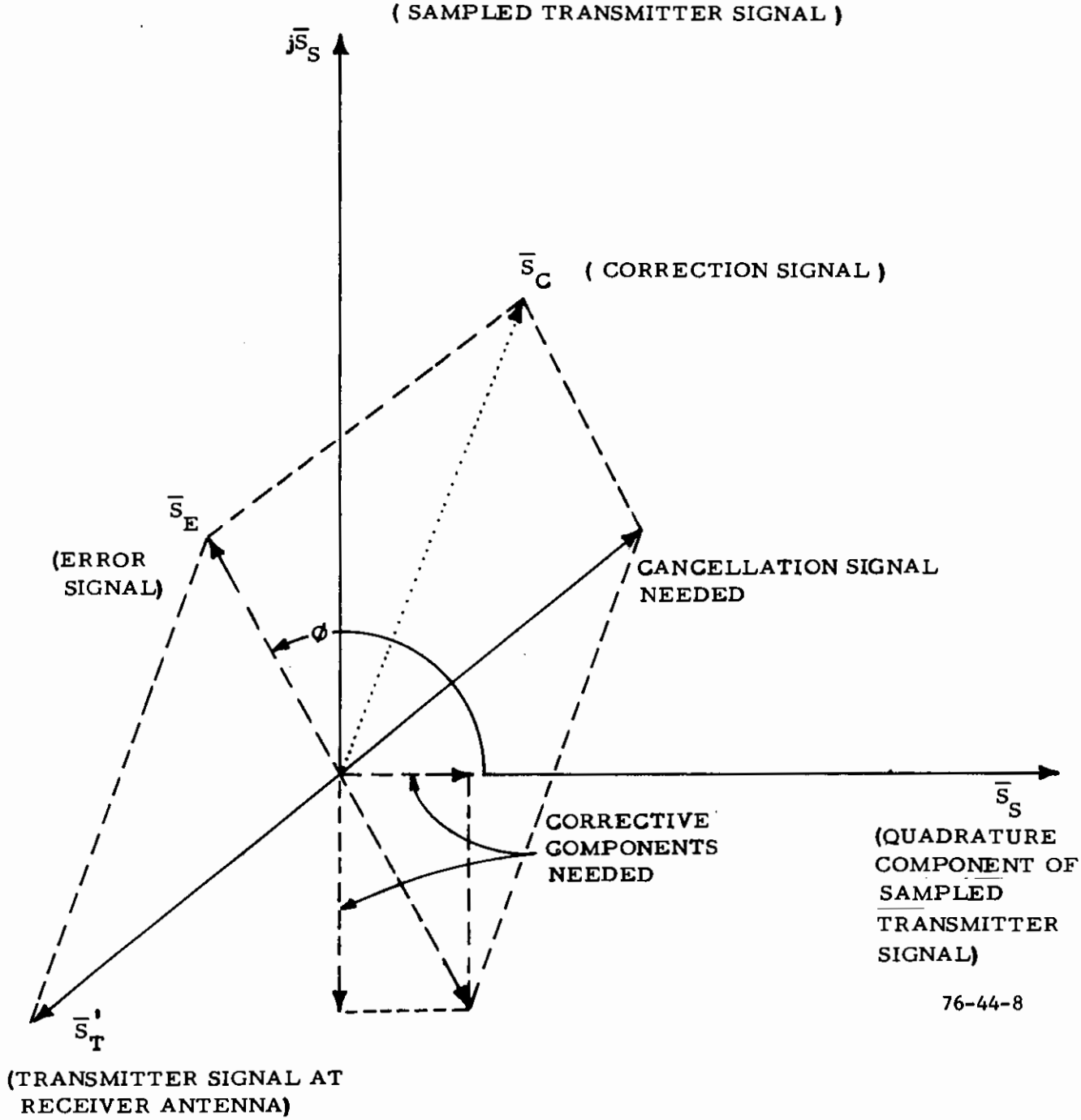

FIGURE 8. AN INSTANTANEOUS VECTOR REPRESENTATION OF LOOP VOLTAGES

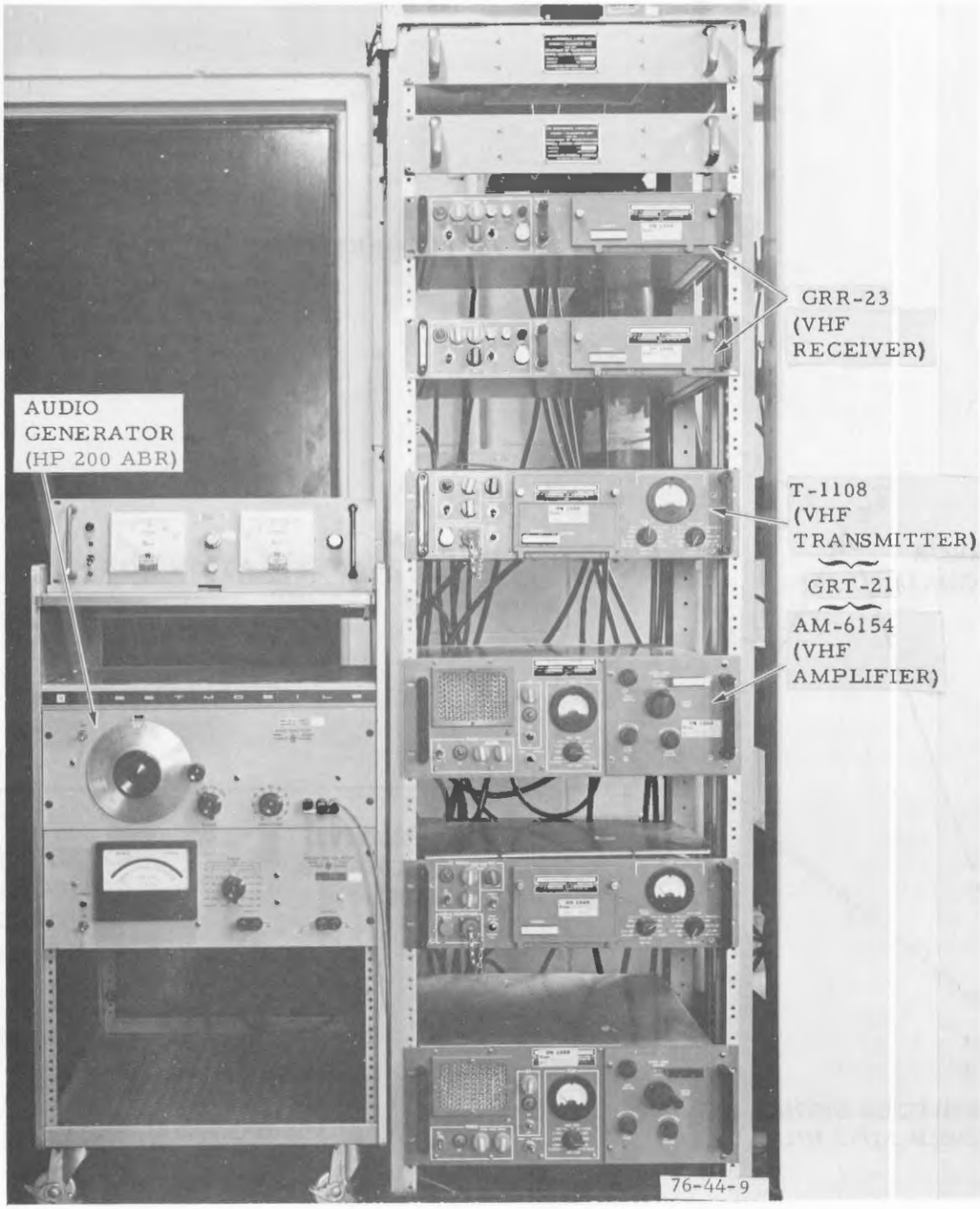

FIGURE 9. A TRANSMITTER AND RECEIVER RACK

FIGURE 10. OUTSIDE VIEW OF TEST SITE ANTENNAS AND BUILDING 176

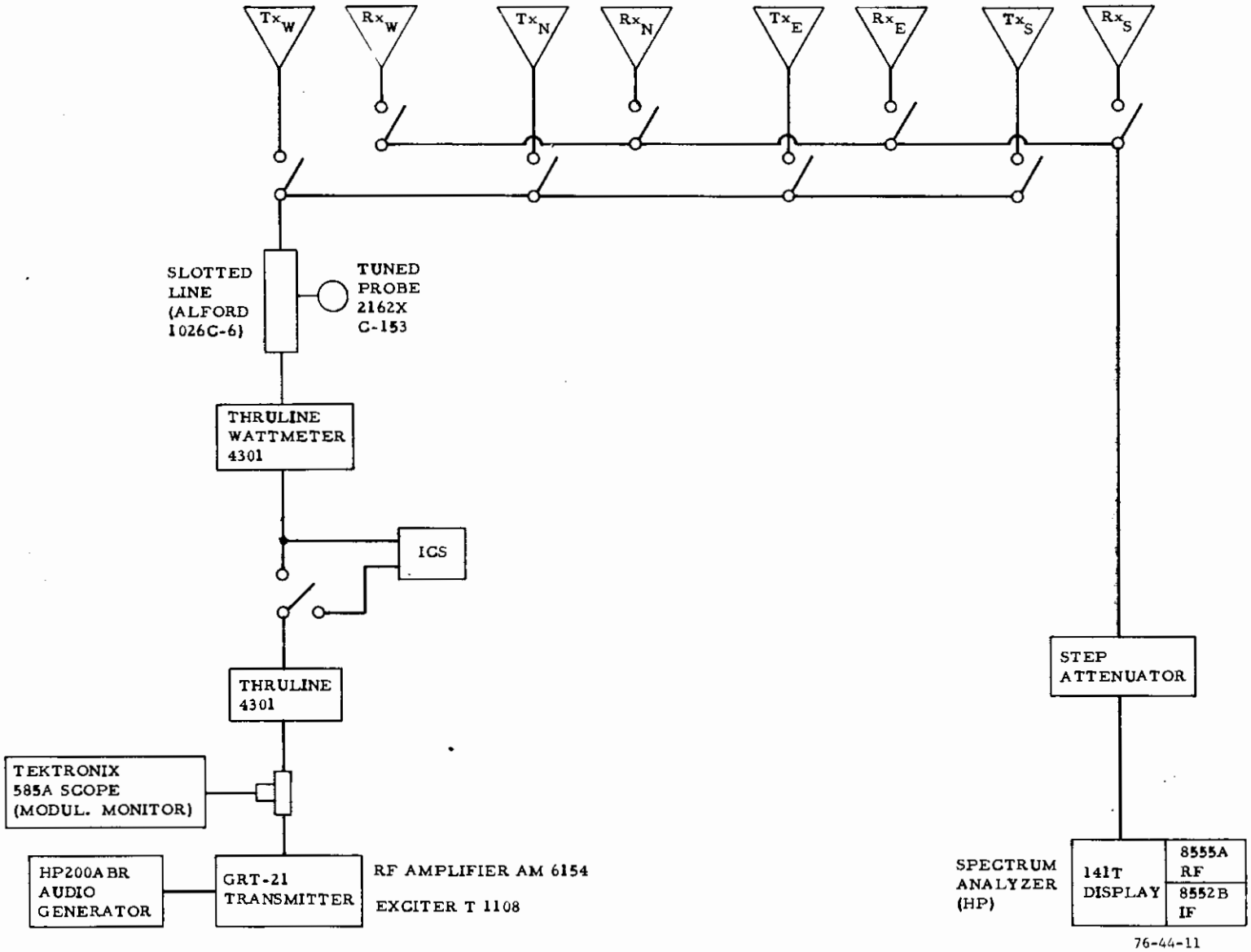

FIGURE 11. COMPOSITE SETUP FOR TESTS RELATED TO TRANSMISSION

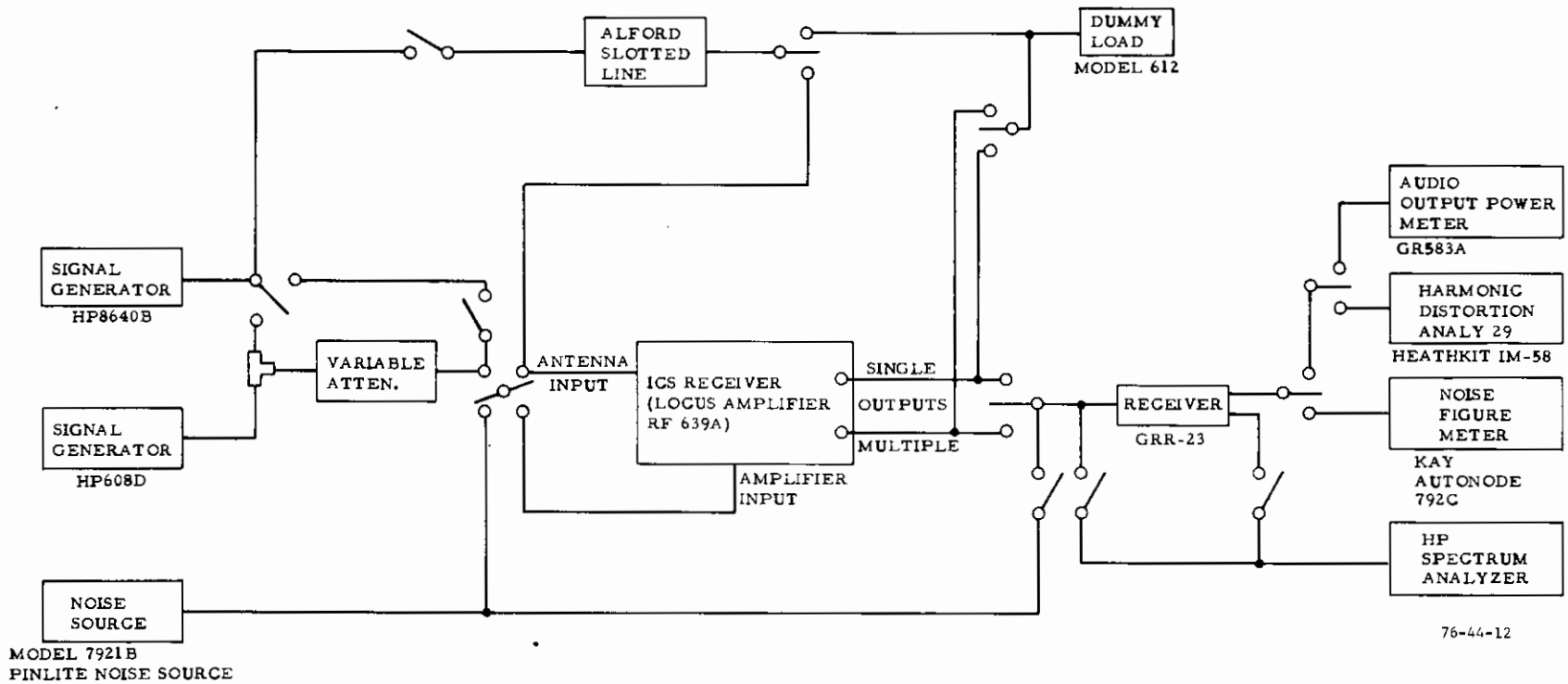

FIGURE 12. COMPOSITE SETUP FOR TESTS RELATED TO ICS EFFECTS ON RECEPTION

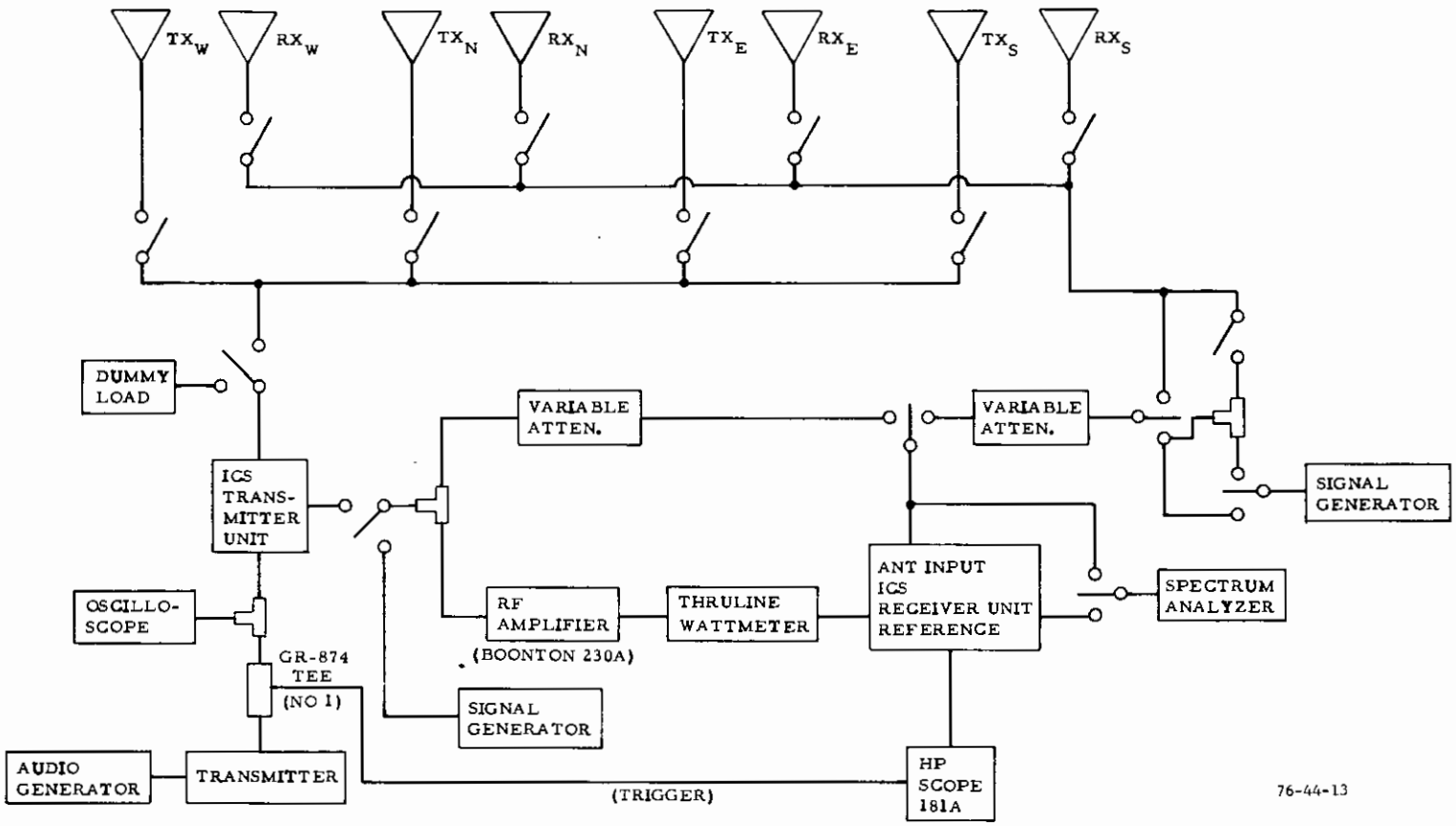

FIGURE 13. COMPOSITE SETUP FOR TESTS RELATED TO INTERFERENCE SIGNAL REDUCTION

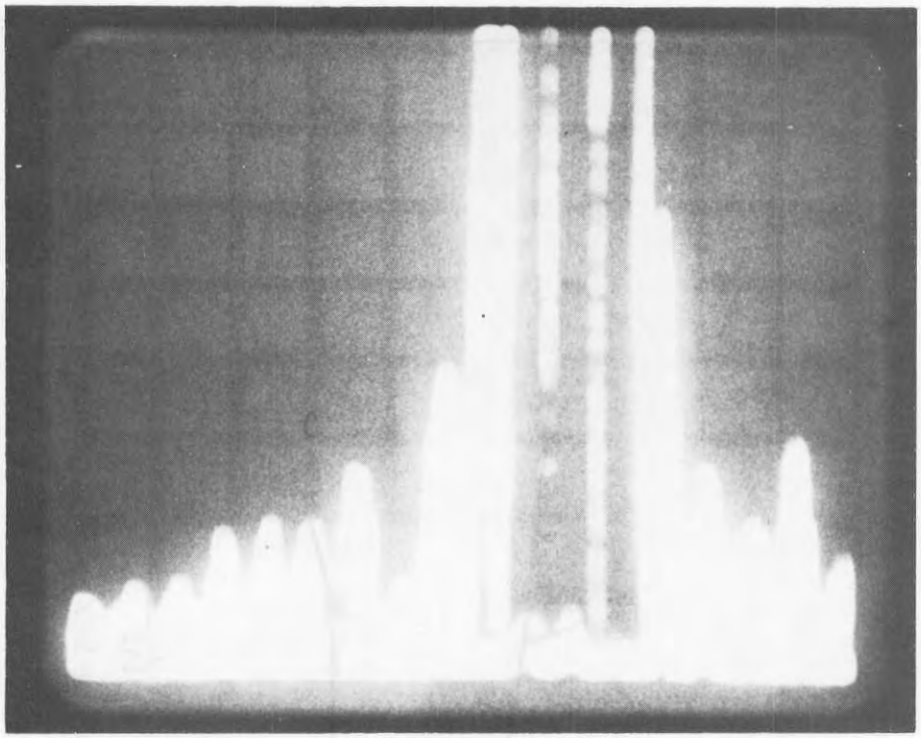

A. LINEAR DISPLAY

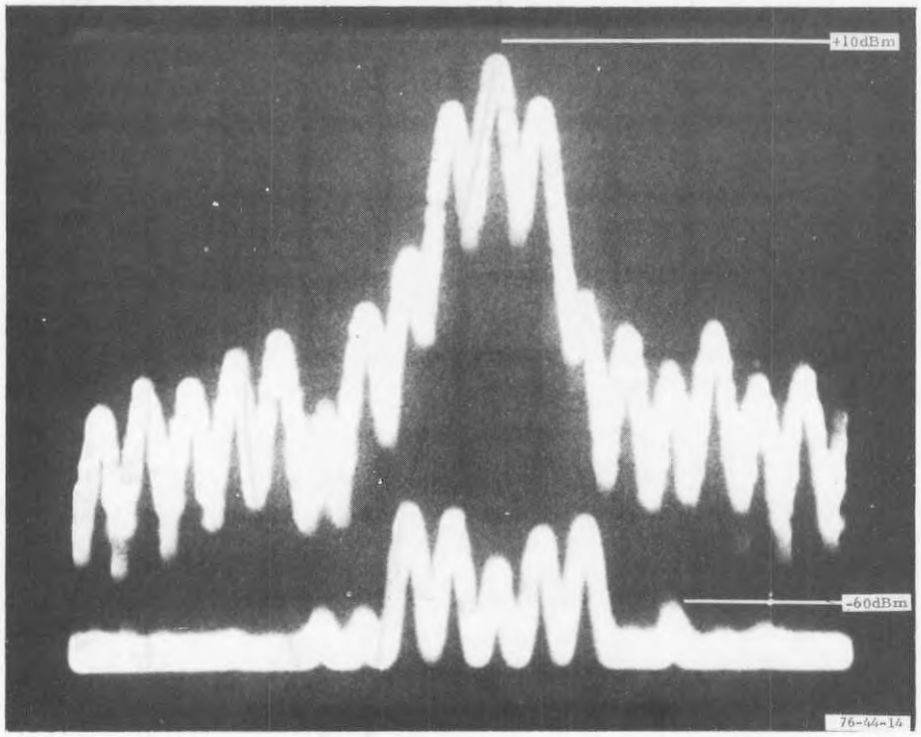

B. LOGARITHMIC DISPLAY
2kHz DIVISION HORIZONTALLY

FIGURE 14. UNSUPPRESSED AND SUPPRESSED INTERFERENCE SIGNAL DISPLAYS ON SPECTRUM ANALYZER (POWER VS. FREQUENCY)

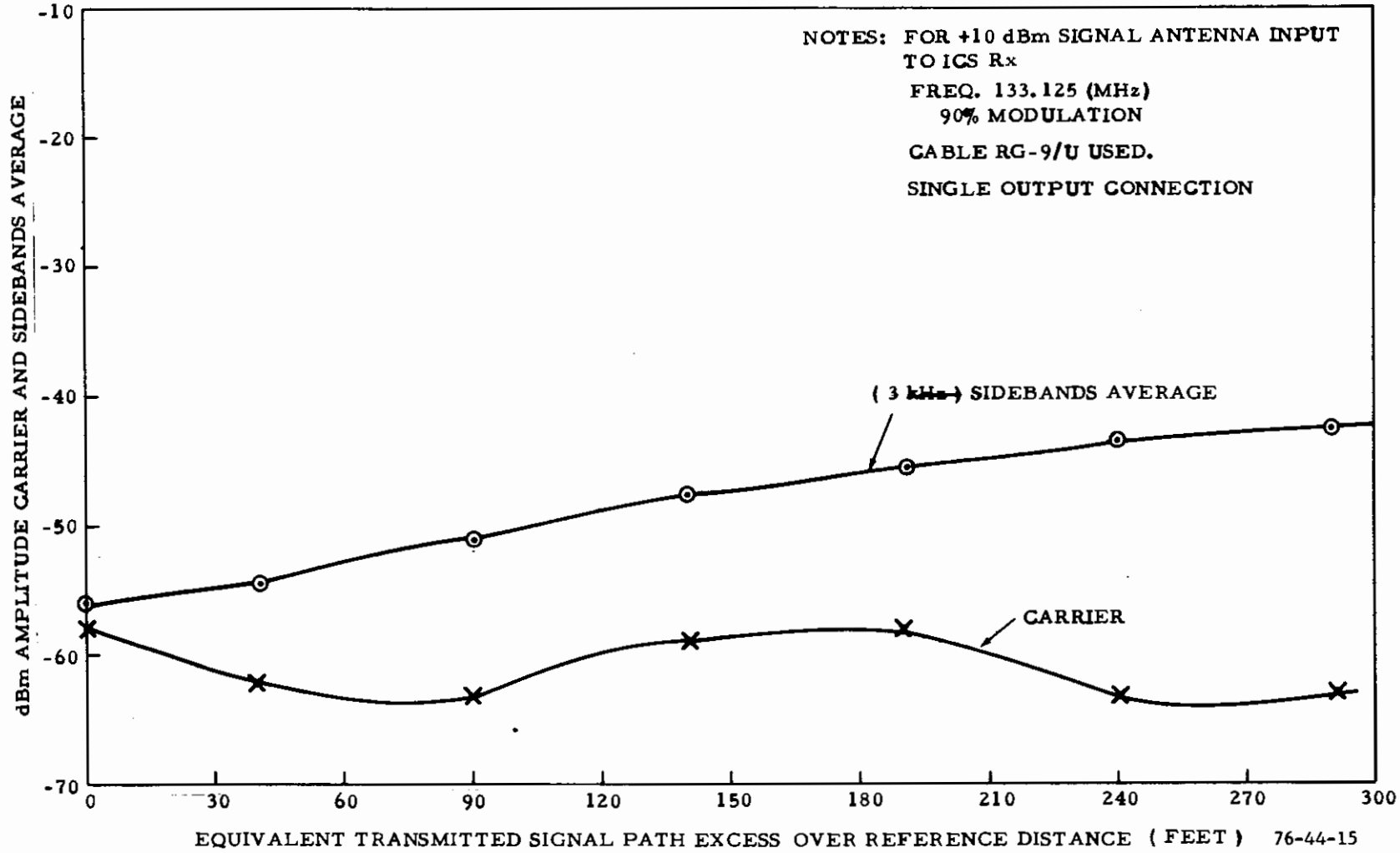

FIGURE 15. CORRELATION OF CARRIER AND SIDEBANDS WITH SIGNAL REFERENCE PATH DIFFERENCE

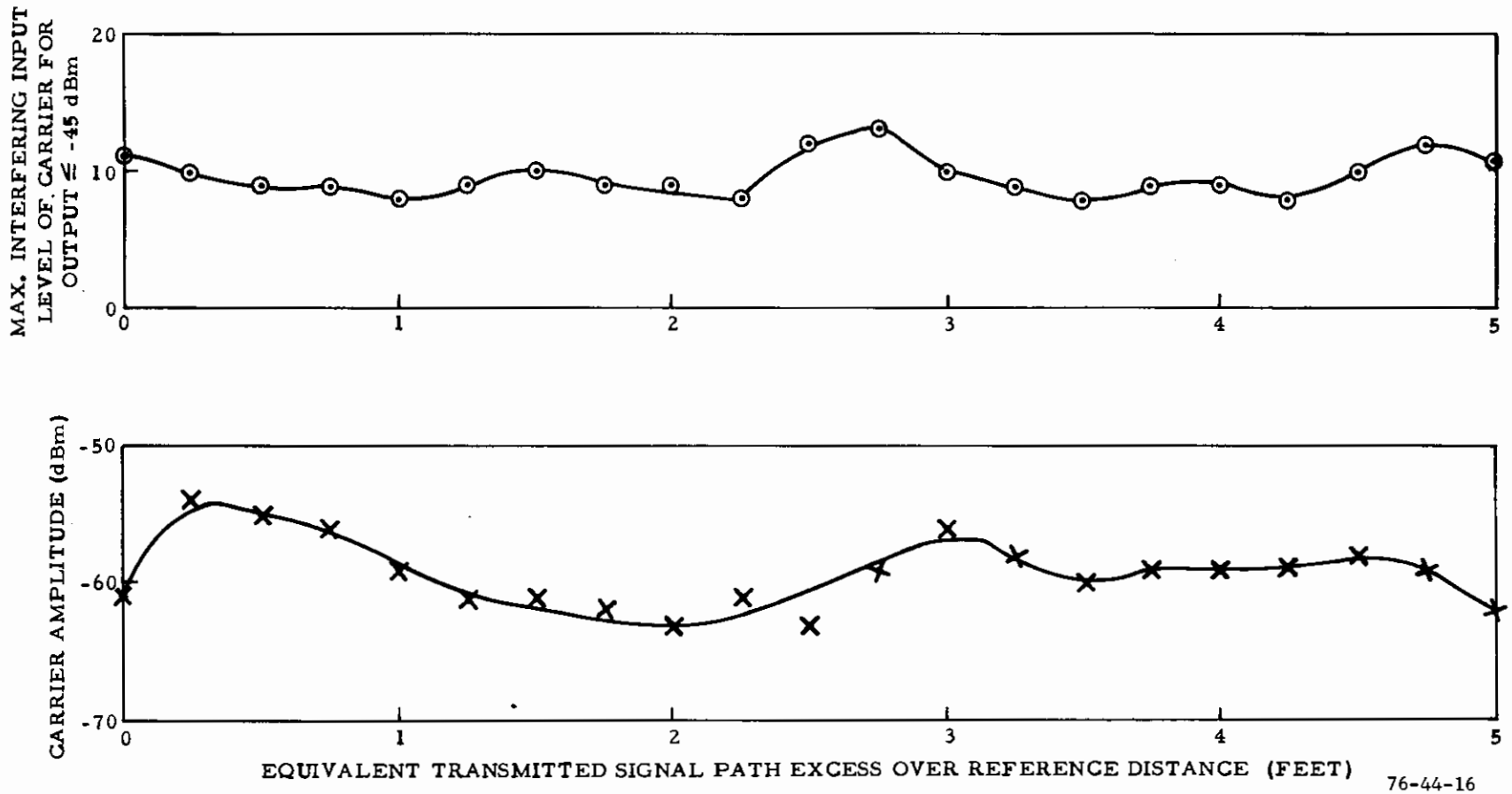

FIGURE 16. EXAMINATION OF SHORT SEGMENT OF SIGNAL VERSUS REFERENCE PATH DIFFERENCE

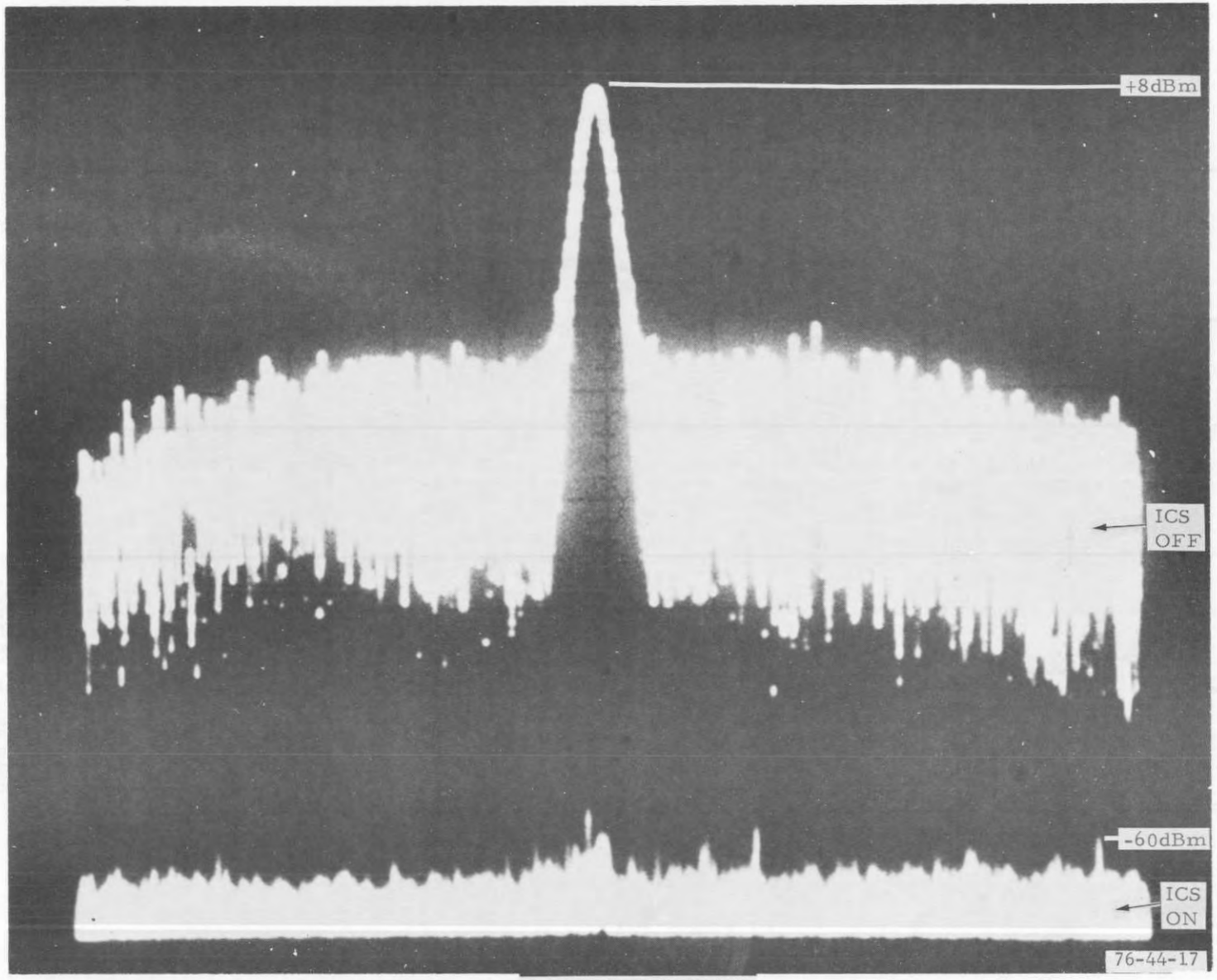

2 kHz PER DIVISION

FIGURE 17. SPECTRUM ANALYZER DISPLAY OF INTERFERING SIGNAL NOISE SUPPRESSION (POWER VS. FREQUENCY)

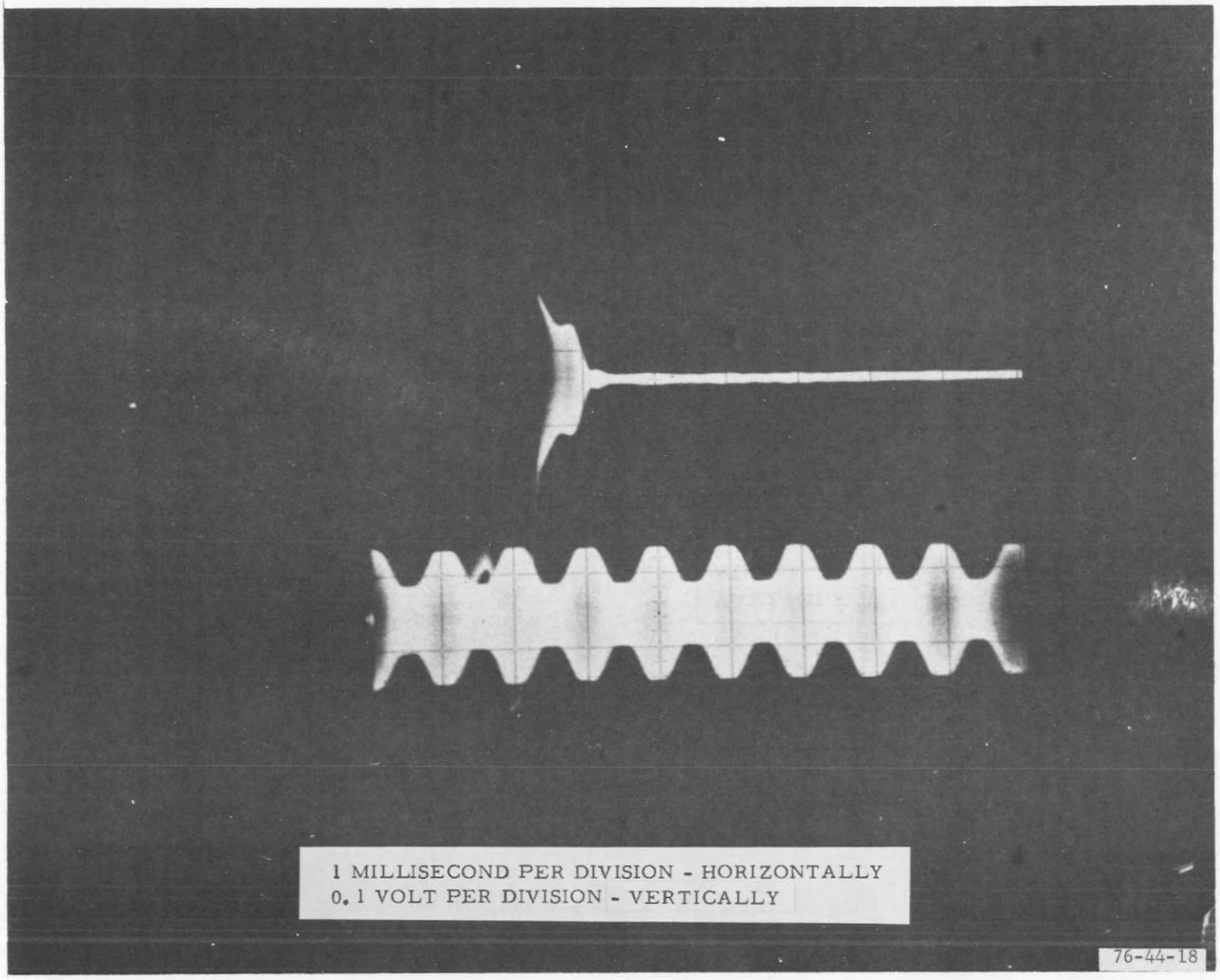

FIGURE 18. OSCILLOSCOPE DISPLAY OF ICS RESPONSE TIME (VOLTAGE VS. TIME)

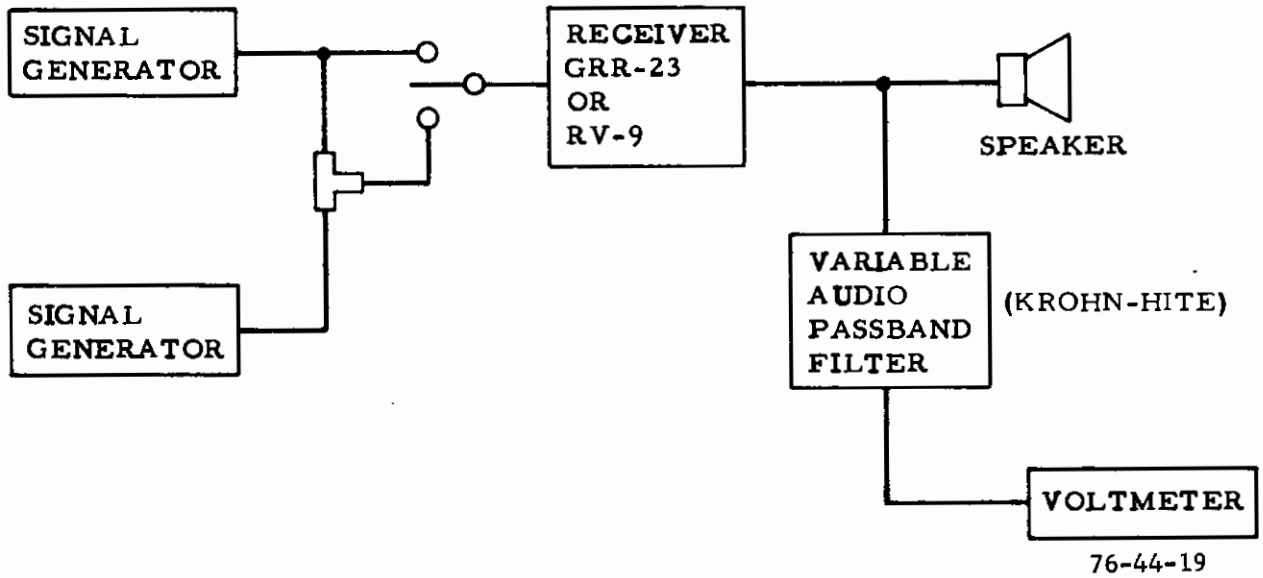

FIGURE 19. SETUP FOR TESTING RECEIVER PERFORMANCE

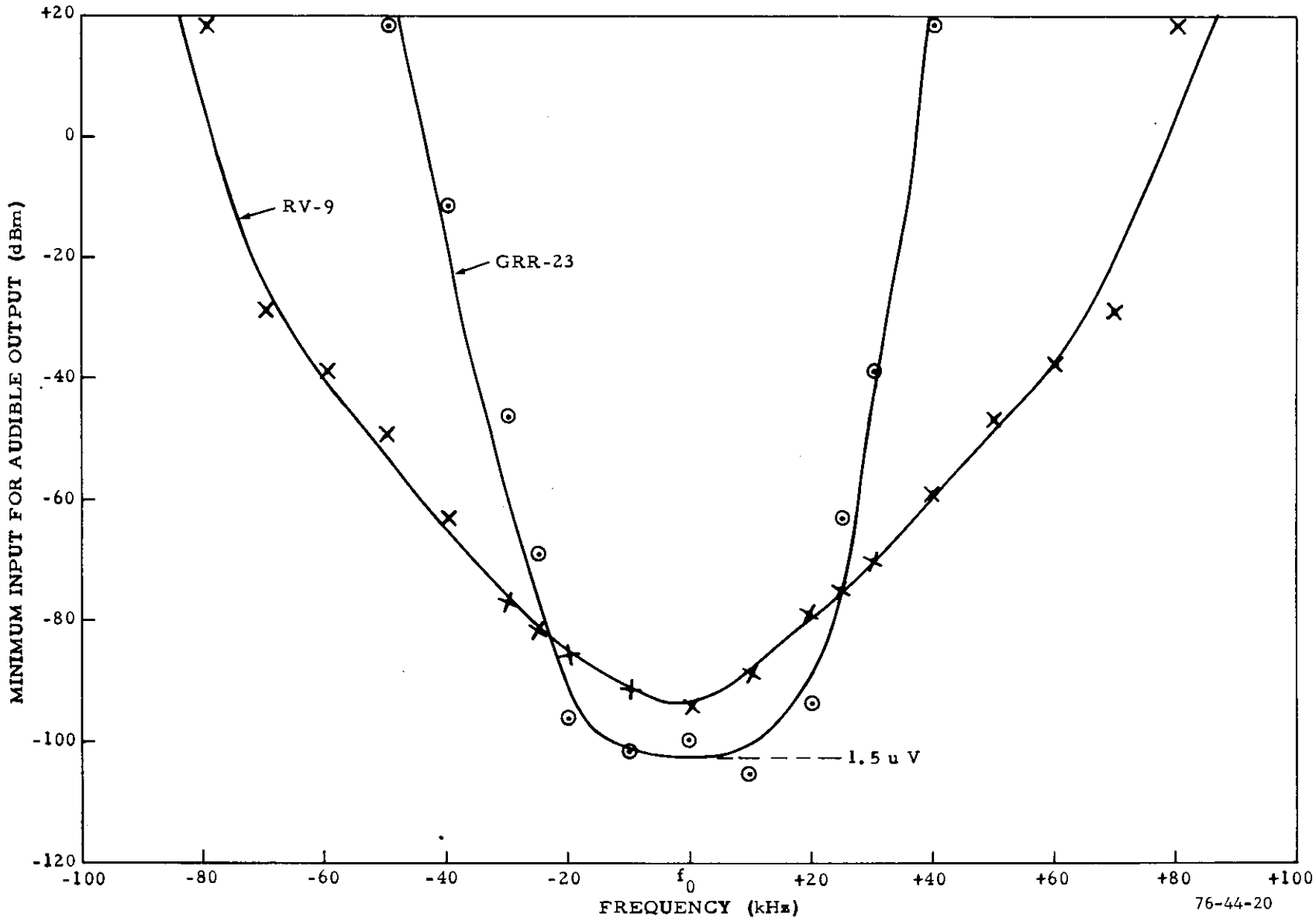

FIGURE 20. FREQUENCY RESPONSE OF FIELD TYPE RECEIVERS

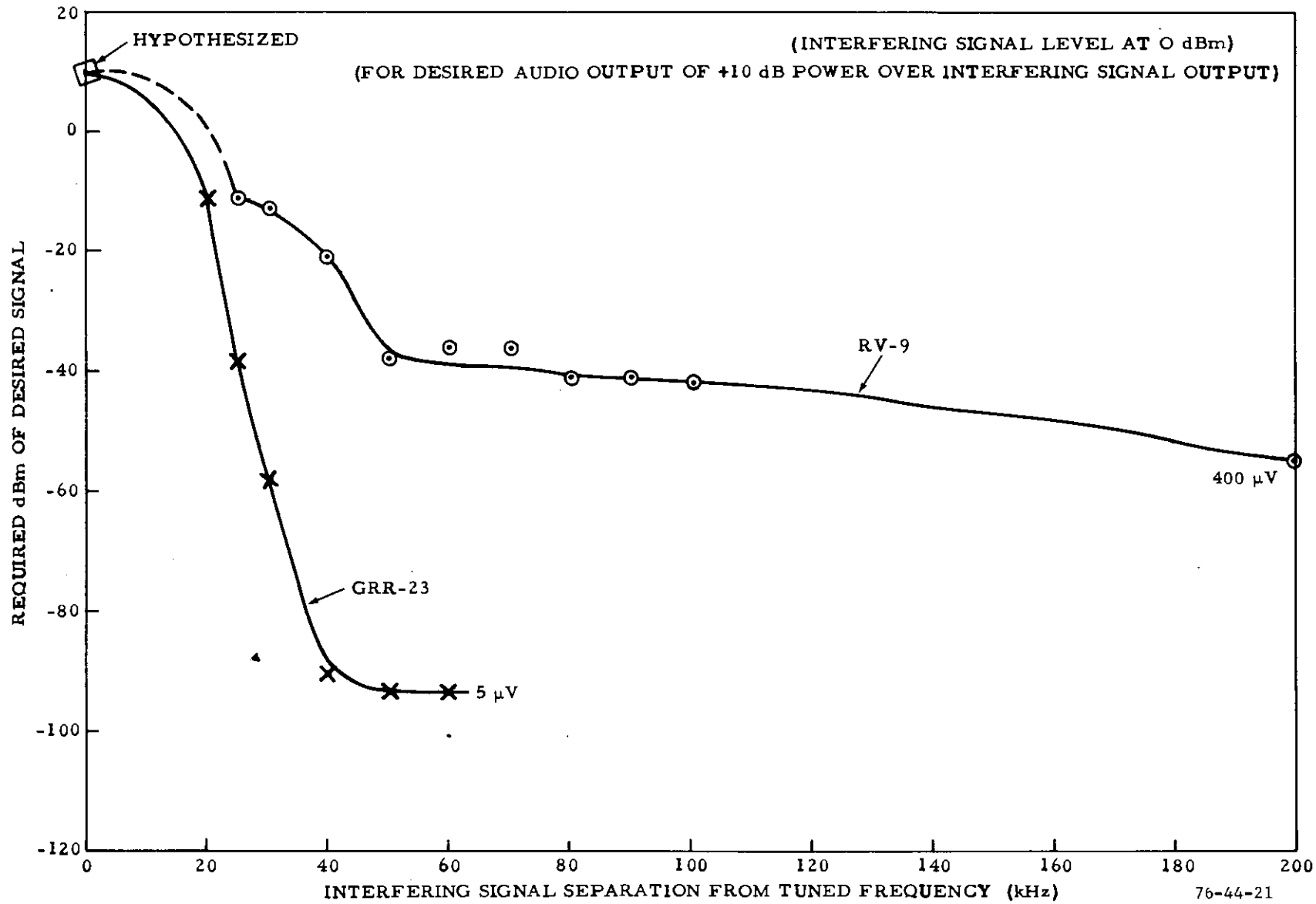

FIGURE 21. DESIRED SIGNAL LEVEL REQUIRED FOR INTERFERING SIGNAL AT VARIOUS FREQUENCY SEPARATIONS

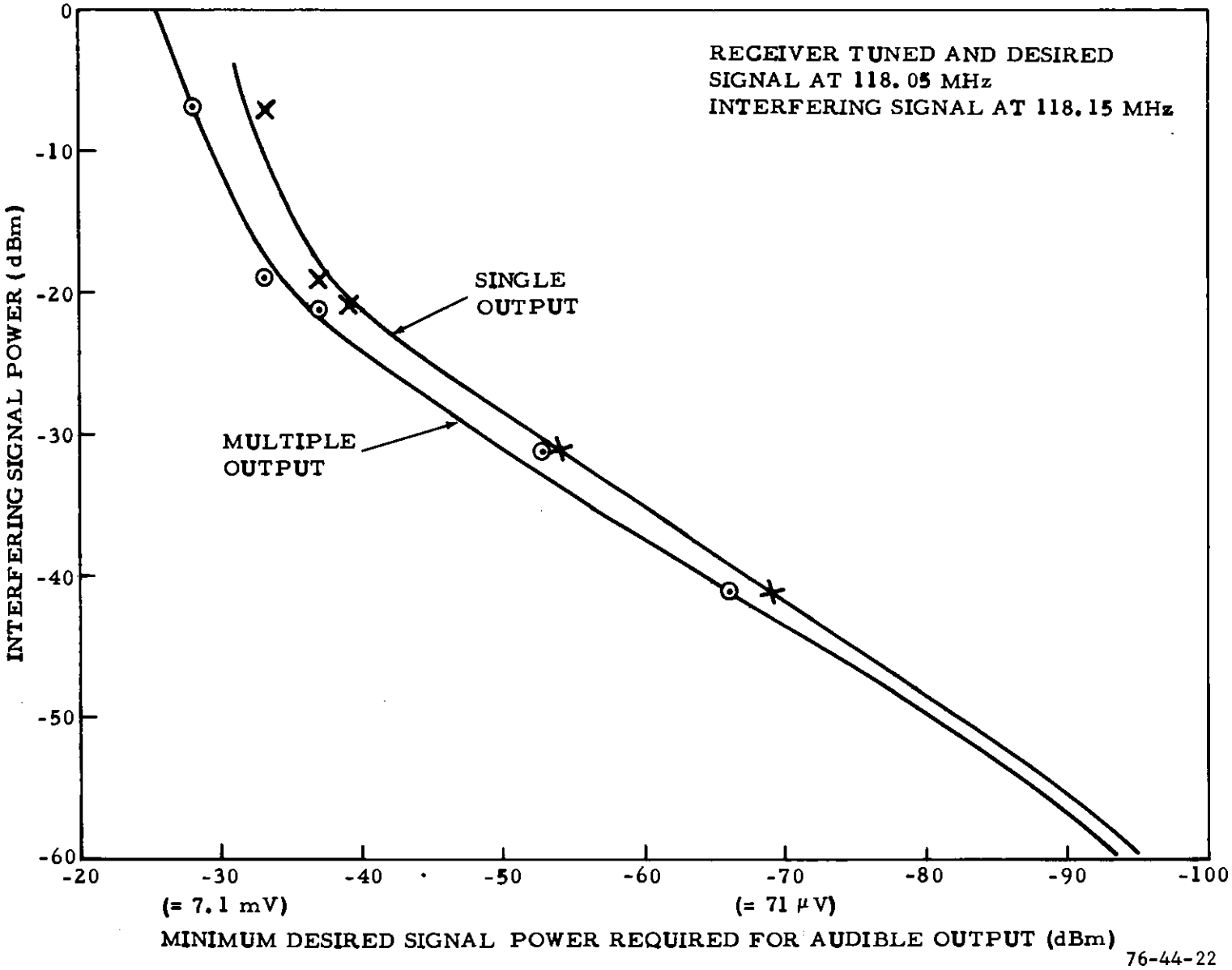

FIGURE 22. ICS EFFECT ON INTERFERENCE FOR RV-9 RECEIVER FOR 100-KHZ SEPARATIONS

APPENDIX

ICS REQUIREMENTS AND REQUIREMENTS ANALYSIS

PERFORMANCE REQUIREMENTS.

The Engineering Requirement (FAA-ER-220-021) specifies the characteristics and performance for this ICS. Ideally, it is desired that the ICS device eliminate the selected unwanted transmitter signal from the receiver antenna input and have no affect on the transmitted signal itself. With regard to these basic considerations, the engineering requirement (ER) is summarized for reference below, but should be checked for exact conclusions.

RECEIVER ANTENNA INPUT REQUIREMENTS.

Frequency range: 118 to 136 MHz
Minimum frequency separation between transmit and receive signal: 25 kilohertz (kHz)
Level of picked up signal to be canceled: to 10 dB
Level of selected unwanted signal: -45 dBm or lower
Received signal (desired) distortion $\leq$ 5 percent
Received signal range: -95 dBm to -30 dBm
Received signal modulation standard: 400 Hz at 30 percent
Received signal plus noise-to-noise decrease: $\leq$ 6 dB
Cancellation response time $\leq$ 30 milliseconds (ms) after -0.1 transmitter power point is reached
Isolation of other ICS-connected receivers - 20 dB
"Noninterfering" (nonselected) carriers separated from interfering signal by 200 kHz
Intermodulation levels per ER 3.11.1.

TRANSMITTER SIGNAL CHANGE RESTRICTIONS.

ICS insertion loss $\leq$ 0.7 dB
No change in modulation percentage
No increase in distortion content or noise or interfering signal level or intermodulation products
Carrier of 8 to 50 watts modulated with 300 to 3000 Hz at 0 to 95 percent
Noninterfering transmissions to +10 dBm and $\geq$ 200-kHz separation
Isolation of the connected transmitter: $\geq$ 65 dB
An amplifier shall be included to compensate for signal losses to receivers accruing from ICS insertion and use of common antenna.

The ICS itself shall operate from a 120-volt alternating current (a.c.) under ambient conditions specified as "Environment II" with temperature range -10° to 60° centigrade (C). It should be solid state and accommodate up to four transmitters. Its expected mean time between failures shall exceed 4,000 hours for 4-transmitter signal operation. It shall be used with 50-ohm coaxial line coupling through type N connectors. A one-time adjustment of the "cancellation notch" for a given interfering transmission frequency is permissible and should perform as specified with a noninterfering signal

to +10-dBm input at a frequency separation of 200 kHz. It shall not generate spurious RF signals greater than -100 dBm from any output. ICS failure shall not degrade transmission, nor shall signal reception be degraded below that existing without the benefit of the ICS; the latter being an interpretation of the ER (3.16.1) if assuming it to be possible. The ICS shall withstand, for 5 minutes, 100 watts of interfering transmission carrier at 90-percent amplitude modulation (AM) and received signals of 1-watt carrier power and 90-percent AM. Other ER content, such as ICS construction and auxiliary equipment, need not be abstracted here.

In addition to the ER, a rigorous description of ICS performance is necessary as indicated in "NAFEC Support for Interference Cancellation System Project (03X) under Air-Ground Voice Modernization Program 062-221" from ARD-200 dated August 16, 1974, and updated by letter of November 20, 1975, from ARD-221, which allocates region field testing of three models to cognizance of Airways Facilities Service (AAF). It is expected that the field-evaluation will provide a basis for issuing production specifications and providing information useful in field installation and operation.

The specific areas delineated are reproduced here and are as follows:

1. Limits (and alleviating solutions) on antenna separations relative to RF phasing and cancellation notch characteristics.

2. Effects of modified radiation path (reflections-multipath)

3. Determine minimum interfering and noninterfering signal channel spacing.

4. Cancellation response time effects in receiver performance (include RF and modulation transients).

5. Determine limiting effects, if any, of practical degrees of instability, intermod products, and noise sidebands in the interfering transmitter on ICS cancellation ability.

6. Voltage standing wave ratio (VSWR) changes in transmitter antenna transmission line (between ICS coupler and antenna).

7. Effects of receiver (and transmitter) RF detuning on ICS performance.

8. Establish limitations or recommendations in use of the compensating amplifier (relative to cross modulation, intermod, dynamic range, receiver sensitivity, system noise figure, squelch-operation, etc.)

9. Determine and advise on ICS equipment modifications deemed necessary.

10. Coordinate region responses and incorporate desired information and changes in the data package.

11. Prepare report and data package for production specifications.

12. Check out instruction book (describe modifications or corrections).

13. Consider disposition of equipment.

14. Other areas of concern that may subsequently appear.

ANALYSIS OF REQUIREMENTS.

Compliance with the ER is to be established at the Contractor's plant with a suitable test plan to be reviewed by NAFEC and Washington personnel. However, the NAFEC laboratory test facility should provide full capability to confirm operation specified in the ER.

Some major evaluation/measurement considerations in connection with the above 14 items, as presented in the test plan and using the same numbering sequence, follows:

1. The designated frequency range of 118 to 136 MHz corresponds to wavelengths ranging from 8.3 to 7.2 feet. This span corresponds to a maximum of approximately 50 electrical degrees. Therefore, to check operation of the pin diode bipolar attenuators fully, the antenna spacing or transmitter/receiver cable lengths must be varied about 6 feet.

2. Multipath, as caused by reflection, results in out-of-phase receiver antenna inputs. The effect on ICS system operation should be noted by simulated control of the phase and magnitude of simultaneous receiver pickup. This can be accomplished with the use of a combination of multiple transmitters and variable cable length and attenuation.

3. A noninterfering signal is defined as that receivable from a collocated transmitter, but not one which the ICS is being used to exclude. Although it is specified as no closer than 200 kHz from the carrier frequency of an interfering signal being cancelled, closer separations can be checked in a planned sequence at the NAFEC test site. This can be done by using two transmitters or by direct injection of a noninterfering signal into the receiver cable, since required permission to transmit at various frequencies would rule out the former method. However, if they may be checked separately, receiver tuning can be varied, and if simultaneously, then only one transmitter and a receiver being varied are needed.

4. The upper power limit for the interfering signal transmitter output power is +48 dBm, or 63 watts, and 10 milliwatts to the receiver before cancellation. The interfering signal in this case shall be suppressed at least 55 dB to a level of 0.031623 microwatt or below.

The response time allowed shall be such that 30 ms after the transmitter has reached 10 percent of its output power, the interfering signal to the receiver shall be below the corresponding level without cancellation by the amount

specified for operation. The requirement needs interpretation, and it is assumed that the level at 30 ms and after shall be 55 dB below the maximum level of 10 dBm received by the antenna and therefore less than -45 dBm per ER 3.6.1(a).

A determination of conformance with this requirement can be implemented by triggering simultaneous photographs of input and suppressed interfering signal displays following timing starting with the 6.3-watt level transmitter output being reached or, more effectively, by a multiple-input chart recorder fed by the transmitter power level and the detected suppressed and unsuppressed interfering signal. However, to clearly register a 30-ms interval, chart speed would need to be about 150 feet per minute (ft/min). An HP 3960 tape recorder has a maximum speed of 15 inches per second (half that desired), but there is none available here.

Modulation transients, it is assumed, refer to those following the initiation and termination of the audio amplitude modulation of the carrier and possibly to the process itself. This can be checked by examining the effects of a modulated carrier and the effects when modulation is turned ON and OFF.

5. The maximum instability (frequency assumed) which can be expected (0.0014 percent for temperature and humidity change) would correspond to a drift of ±1900 Hz in a minimum time of unspecified seconds in accordance with FAA-E-2289 "Transmitter, VHF-UHF, Ground-Air 50 watt." Considering the 0.0001 percent and refering to other parameters, 200 Hz is plausible. This can be accomplished by frequency modulation of a signal generator carrier.

Intermodulation products generated in the transmitter can be considered as another noninterfering signal and would therefore be examined under item 3 above. The particular intermodulation products generated at a site are dependent on simultaneous transmitting frequencies and are a problem apart from the ICS evaluation itself.

The maximum transmitter sideband noise (including hum) which can be expected is 0.5 milliwatt (mW) for 50-watt carrier power for a bandwidth of 10 kHz in accordance with the above FAA specification. This can be produced with a noise generator and coupled with the incoming transmitter signal to add to the operating level to obtain a maximum for this evaluation.

6. An increase in VSWR resulting from the insertion of ICS coupling can be determined by inserting a slotted line at a cable connection point between the ICS connection and the transmitting antenna and measuring VSWR with and without coupling.

7. The use of crystals in the transmitter and receiver would appear to obviate the consideration of RF detuning on ICS performance. Any such effect would be expected more from the transmitter. In this case, a determination of this effect should have been obtained by tests in connection with RF instability in item 5 above.

8. The compensating amplifier supplied by the contractor should be evaluated from the standpoint of the gain and distortion it introduces by varied operating conditions with and without it. Amplifier attributes can also be bench-checked by standard procedures in addition to contractor plant tests.

9 through 14. Continuous coordination, as necessary, was maintained with Washington and the contractor to assure the most thorough evaluation and maximum input toward specifying a product with optimum performance and field suitability. Where called for by AAF, NAFEC will provide information and assistance with regard to Region testing and include any findings in report as appropriate.