Report No. FAA-RD-81-2
FAA-CT-81-6

COPY 2

AIRPORT SURFACE DETECTION EQUIPMENT (ASDE)-3 OPERATIONAL EVALUATION

Louis A. Dvorsky
Anthony J. Swezeny
Edwin R. Hartz

FEDERAL AVIATION ADMINISTRATION TECHNICAL CENTER
Atlantic City Airport, N.J. 08405

FEDERAL AVIATION ADMINISTRATION
APR 1981
TECHNICAL CENTER LIBRARY
ATLANTIC CITY, N.J. 08405

FINAL REPORT

MARCH 1981

Document is available to the U.S. public through the National Technical Information Service, Springfield, Virginia 22161.

Prepared for

U. S. DEPARTMENT OF TRANSPORTATION
FEDERAL AVIATION ADMINISTRATION
Systems Research & Development Service
Washington, D. C. 20590

Technical Report Documentation Page

1. Report No.	2. Government Accession No.	3. Recipient's Catalog No.
FAA-RD-81-2		

4. Title and Subtitle	5. Report Date
AIRPORT SURFACE DETECTION EQUIPMENT (ASDE)-3 OPERATIONAL EVALUATION	March 1981
	6. Performing Organization Code
7. Author(s) L. Dvorsky, A. Swezeny, and E. Hartz	8. Performing Organization Report No. FAA-CT-81-6
9. Performing Organization Name and Address Federal Aviation Administration Technical Center Atlantic City Airport, New Jersey 08405	10. Work Unit No. (TRAIS)
	11. Contract or Grant No. 143-102-540
12. Sponsoring Agency Name and Address U.S. Department of Transportation Federal Aviation Administration Systems Research and Development Service Washington, D.C. 20590	13. Type of Report and Period Covered Final April 14 - May 30, 1980
	14. Sponsoring Agency Code

15. Supplementary Notes

16. Abstract

Operational tests were performed on the Airport Surface Detection Equipment (ASDE)-3 radar. Three teams of air traffic controllers, two per team, with current field ASDE-2 experience, were used as test subjects. The controllers were from the Eastern and New England Regions. These tests were conducted to determine the extent to which the ASDE-3 met requirements as presented by the Air Traffic Service (ATS) and what the controllers' opinions were of the radar.

Tests conducted were: airport surface coverage capability, target detection as a function of speed between aircraft and aircraft to obstruction resolution, target size and shape determination, standing target heading, and runway clearance.

17. Key Words	18. Distribution Statement
ASDE Radar	Document is available to the U.S. public through the National Technical Information Service, Springfield, Virginia 22161

19. Security Classif. (of this report)	20. Security Classif. (of this page)	21. No. of Pages	22. Price
Unclassified	Unclassified	43	

Form DOT F 1700.7 (8-72) Reproduction of completed page authorized

TABLE OF CONTENTS

	Page
INTRODUCTION	1
Purpose	1
Background	1
System Description	1
DISCUSSION	4
Test Configuration	4
Test Procedures and Results	4
Controller Questionnaire Results	19
SUMMARY OF RESULTS	22
CONCLUSIONS	23
RECOMMENDATIONS	24
APPENDICES	
A — Outline of Operational Requirements	
B — Moving Target Position Error Analysis	
C — Subject Controller Questionnaire ASDE-3	

LIST OF TABLES

Table		Page
1	STC Attenuation in dB Versus Range	10
2	Speed Test Target Brightness Averages On a Scale of 0 to 5	11
3	Target Resolution — Two Aircraft (7,500-Foot Site)	13
4	Target Resolution — Aircraft and Pinto (7,500-Foot Site)	13
5	Target Resolution — Two Aircraft (1,500-Foot Site)	13
6	Obstruction Resolution	15
7	Identification of Targets by Size — Percentage of Correct Estimates	15
8	Identification of Targets by Size — Error Breakdown by Airframe	16
9	Identification of Recorded Targets by Size — Percentage Of Correct Estimates	16
10	Runway Clearance Discrimination — Nose (Time in Seconds)	20
11	Runway Clearance Discrimination — Tail (Time in Seconds)	20
12	Functional Comparison of ASDE-3 to ASDE-2	21
13	Effectiveness of Unit Controls and Indicators	21

INTRODUCTION

PURPOSE.

The purpose of the operational evaluation of the Airport Surface Detection Equipment (ASDE)-3 System, located at the Federal Aviation Administration (FAA) Technical Center, Atlantic City Airport, N.J., was to determine the degree to which the operational requirements established by the Air Traffic Service (ATS) were fulfilled, develop a direct controller comparison of the ASDE-3 to the ASDE-2 system performance, and evaluate the operational usefulness of ASDE-3 enhancement features.

BACKGROUND.

The ASDE-2 now used at several major airports has been operational for the past 20 years. Being a vacuum tube design, it has had a maintenance problem with tube failures, resulting in mean time between failures (MTBF) rate of approximately 200 hours. In addition, the radar is nearly useless in heavy rain due to backscatter from rain droplets, resulting in a "white-out" and to absorption of signals at its emitted frequency by the rain.

In order to correct the above deficiencies, the Transportation Systems Center (TSC), under FAA Systems Research and Development Service (SRDS) sponsorship, issued a contract (DOT-TSC-1373) to Cardion Electronics for development of the ASDE-3 engineering model and Display Enhancement Unit (DEU). Upon completion, the system was shipped to the FAA Technical Center for engineering evaluation by TSC and operational evaluation by the FAA. The operational tests were begun on April 14, 1980, and completed May 30, 1980.

SYSTEM DESCRIPTION.

The ASDE-3 radar uses a solid-state design. Several new features have been added to provide a state of the art and practical airport surface detection system. The new features are:

1. Antenna design for continuous focus from near to far field.

2. Rotating radome of a smaller cross section than a conventional radome which provides a constant window for the antenna and also sheds precipitation, eliminating losses due to radome coating by rain, snow, or ice (figure 1).

3. A new pedestal with belt drives which reduce noise.

4. A single oscillator is used for the local oscillator (LO), as well as the frequency source for the traveling wave tube (TWT) transmitter.

5. The pulse repetition frequency (PRF) is selectable at 13, 16, and 20 kilohertz (kHz), staggered or fixed.

6. Transmitter frequency agility is available, as well as several fixed frequencies from 15.7 to 16.2 gigahertz (GHz).

7. The solid-state receiver has a 6 decibel (dB) noise figure and a 20 dB dynamic range.

8. A DEU is part of the system (figure 2). This unit provides airport mapping and target enhancement between the map boundary lines. Background may be reduced or eliminated while not affecting the enhanced targets. The display of the ASDE-3 is an analog scan converted television (TV) with 1,225 scan lines per frame.

This radar operates in the frequency range of 15.7 to 16.2 GHz with a pulse width of 36 nanoseconds (ns), a peak power of 10 kilowatts (kW), and a range of 18,000 feet. It has three fixed PRF's of 13, 16 and 20 kHz. The selected PRF may also be staggered. In addition to the variable PRF, the carrier frequency may be varied in thirteen 30 megahertz (MHz) steps or any

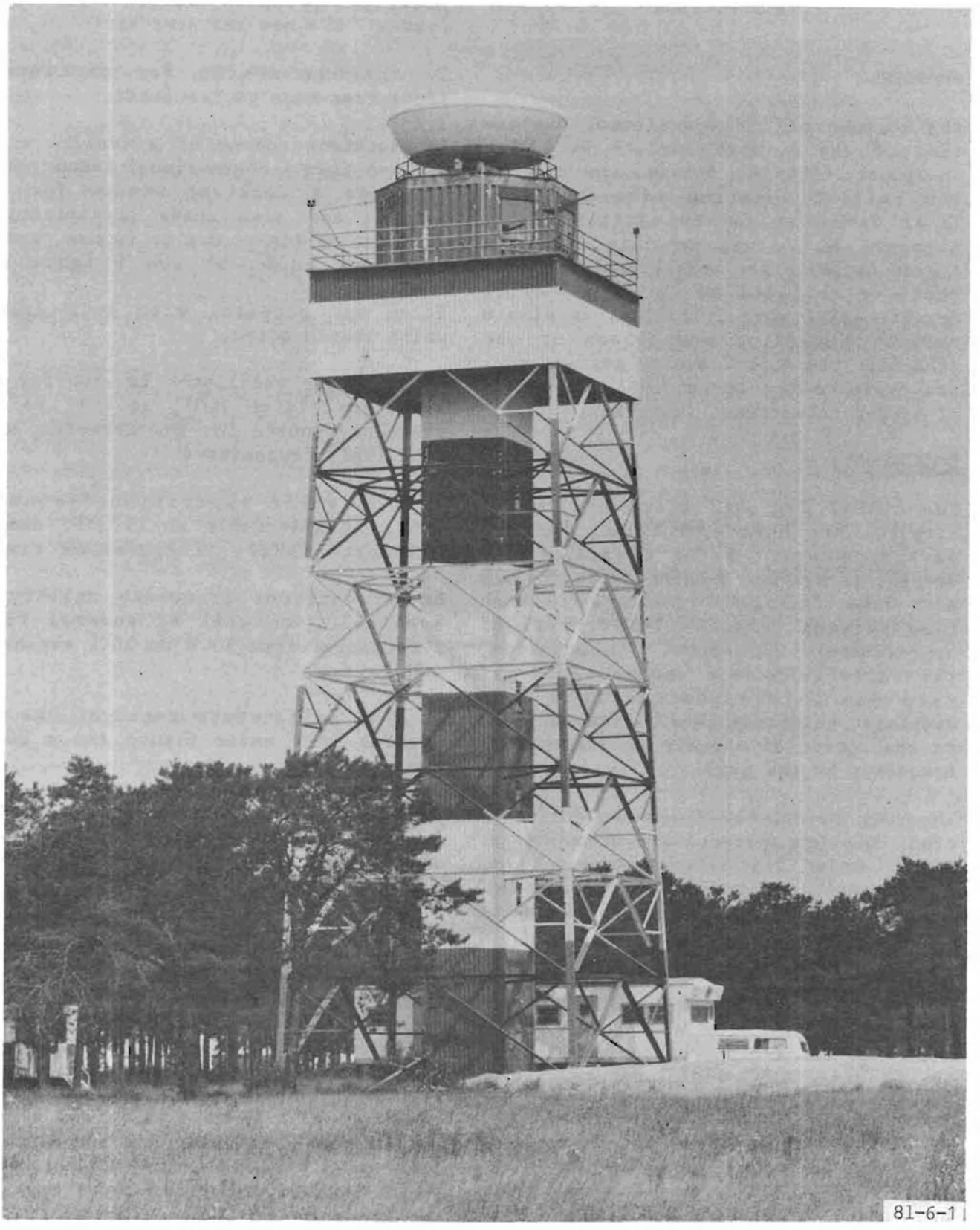

FIGURE 1. ASDE-3 TOWER WITH ROTODOME

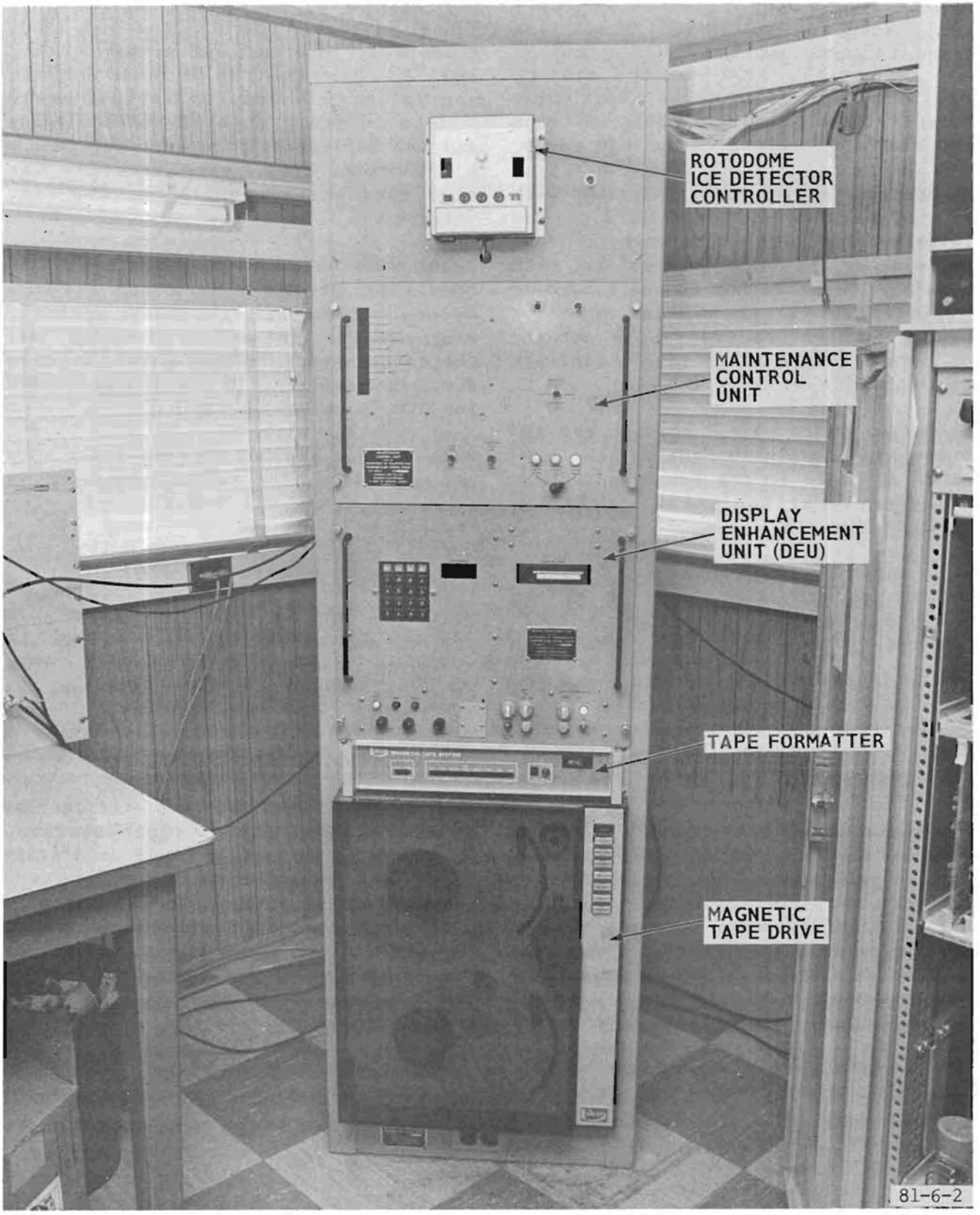

FIGURE 2. DISPLAY ENHANCEMENT UNIT

combination thereof. These features are to reduce or eliminate second time around targets, amplitude variations of small targets, and clutter due to precipitation. The sensitivity time control (STC) is programmable so each site can have its own unique STC curve.

The antenna is circularly polarized with an azimuth beam width of 0.25°. The elevation main beam is between 1.6° and 2.0° wide at the half-power points, with secondary beam cosecant to the 1.5 power shaping from -2° to -4° and cosecant shaping from -4° to -31°. The antenna and radome rotate at 62 revolutions per minute (rpm).

The output video passes through the DEU to the high resolution analog scan converter and then to the New Bright Radar Indicator Tower Equipment (NU-BRITE) display (figure 3).

Range and XY offset are continuously variable at the scan converter or the remote display control unit. A block diagram of the system is shown in figure 4.

DISCUSSION

TEST CONFIGURATION.

The operational tests were set up to address all applicable items in the Outline of Operational Requirements (appendix A). The tests were run using both live and recorded video data. The live tests were controlled by the test coordinator (figure 5) who communicated with the test subjects via intercom, received very high frequency (VHF) ground and local control, communicated with portable (hand held) and vehicle stations via VHF-frequency modulation (FM) and with the project aircraft via VHF aircraft frequency. The test subjects comprised three teams, each consisting of two air traffic controllers from airports with ASDE-2 facilities. The airports and number of controllers from each were: (1) Boston, one; (2) Washington, D.C. (Dulles International Airport), one; (3) New York (John F. Kennedy International Airport), two; and (4) Newark, two. Each subject controller was located approximately 3 feet in front of a NU-BRITE display and was monitored by project personnel. A 4-channel tape voice recorder was also used where required by the test (figure 6).

Each team was familiarized with the operation of the system and given a demonstration of frequency agility, staggered PRF, and sector blanking. All the tests were performed with five step frequency agility, 20 kHz staggered PRF and STC, as shown in table 1.

When targets planned for the tests were not available, the nearest airframe in size and shape was substituted. The Technical Center aircraft used were a Convair CV-580, a Gulfstream G-159, and, in one test, a Convair CV-880.

With the DEU operational, each controller was allowed to set the map and background controls as he desired. This simulated the operating conditions in the field.

TEST PROCEDURES AND RESULTS.

AIRPORT COVERAGE. The test site was the Atlantic City (ACY) Airport surface. An aircraft (Gulfstream G-159 or Convair CV-580) and a Ford Pinto automobile were directed along runways and taxiways by ground control on a predetermined route, the Pinto trailing the aircraft by approximately 200 feet. Figure 7 shows the route on the airport. Appropriate radio communication was established between the aircraft, Pinto, ground control, and test coordinator prior to the start of each test.

The first test was performed with the DEU operating. The test subjects were to observe both targets along the entire route, while noting target returns on separate airport maps. Returns were classified from one to

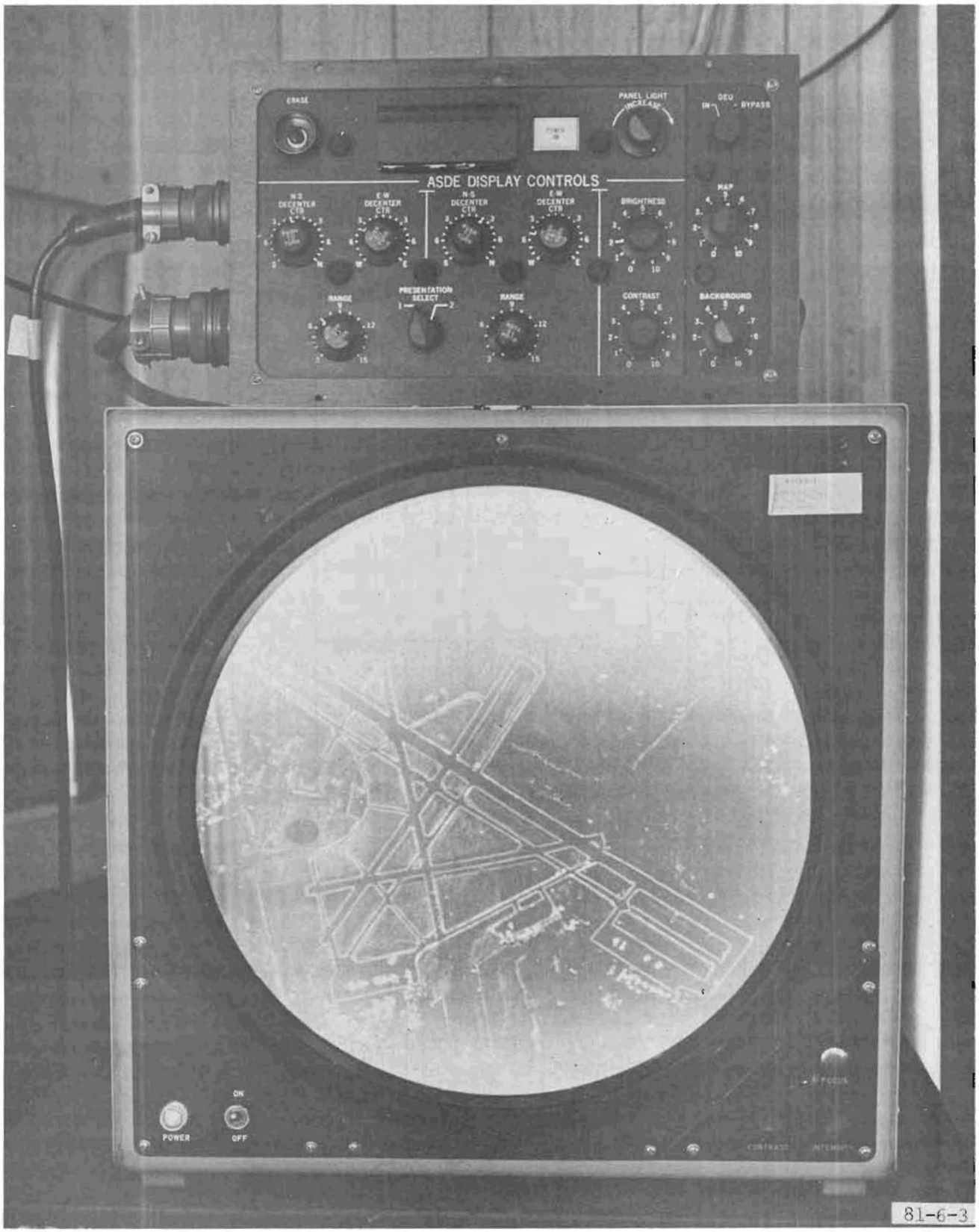

FIGURE 3. NU-BRITE DISPLAY WITH REMOTE CONTROL UNIT

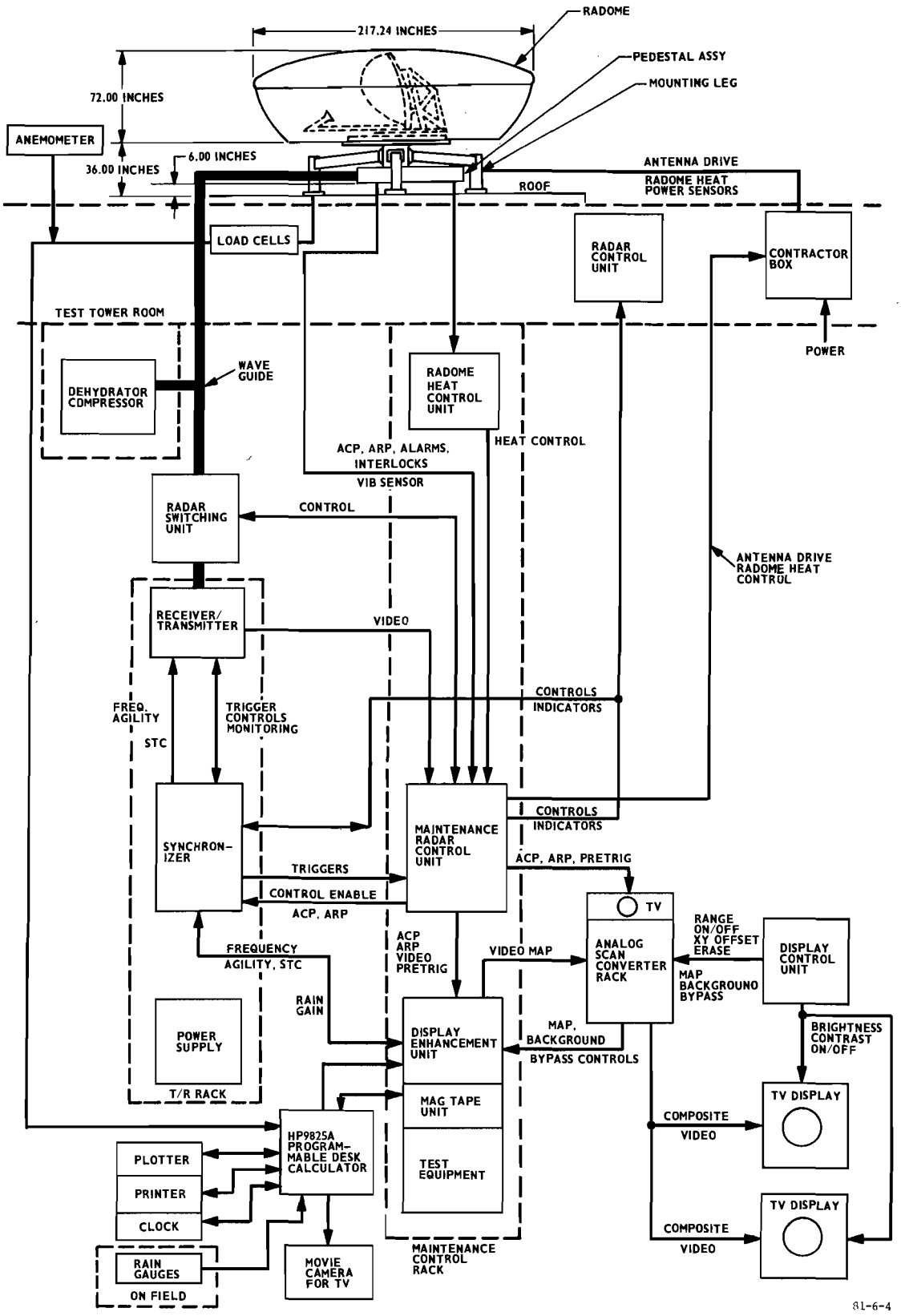

FIGURE 4. BLOCK DIAGRAM, ASDE-3 SYSTEM

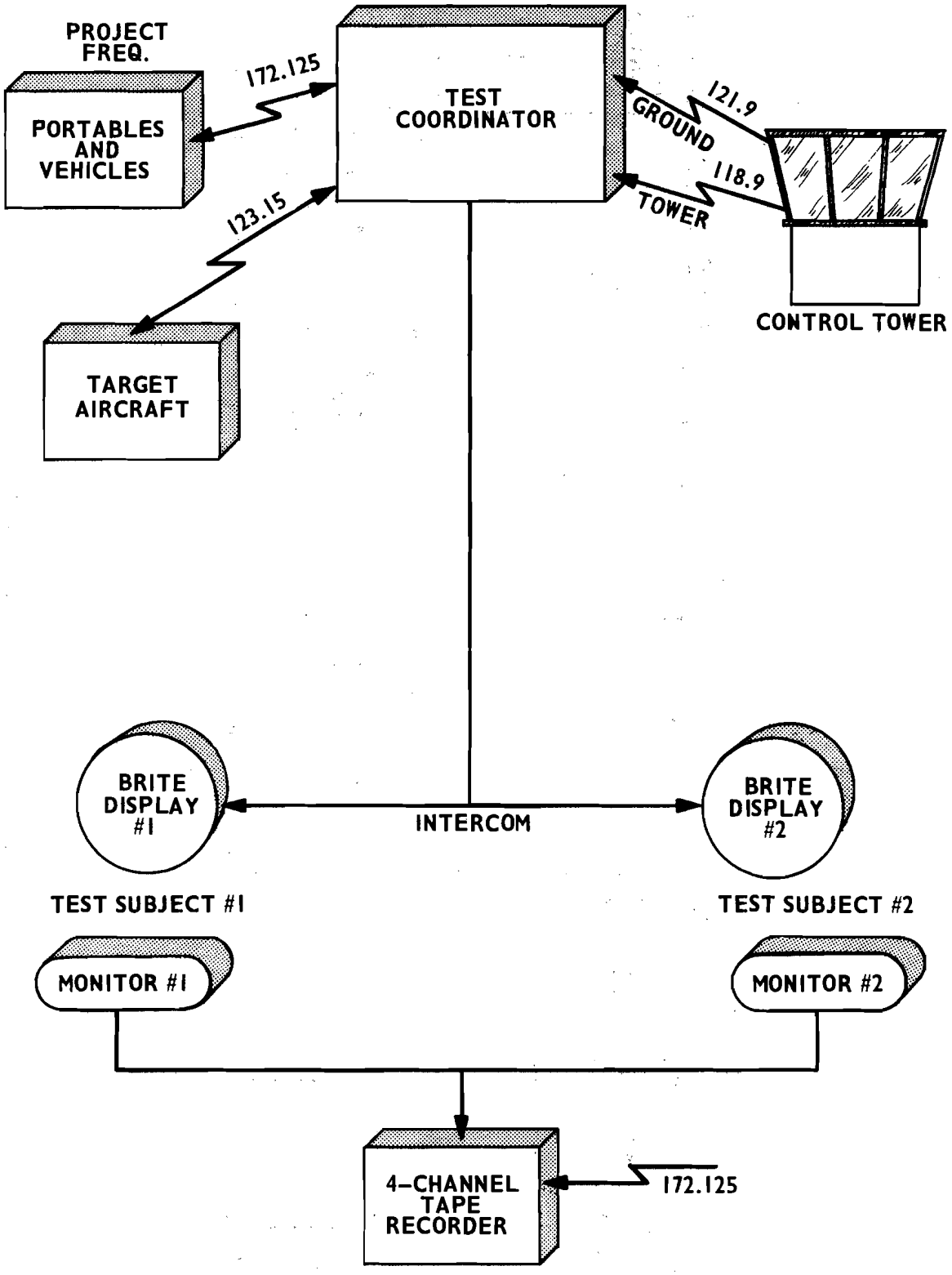

81-6-5

FIGURE 5. COMMUNICATIONS, ASDE-3 OPERATIONAL TEST

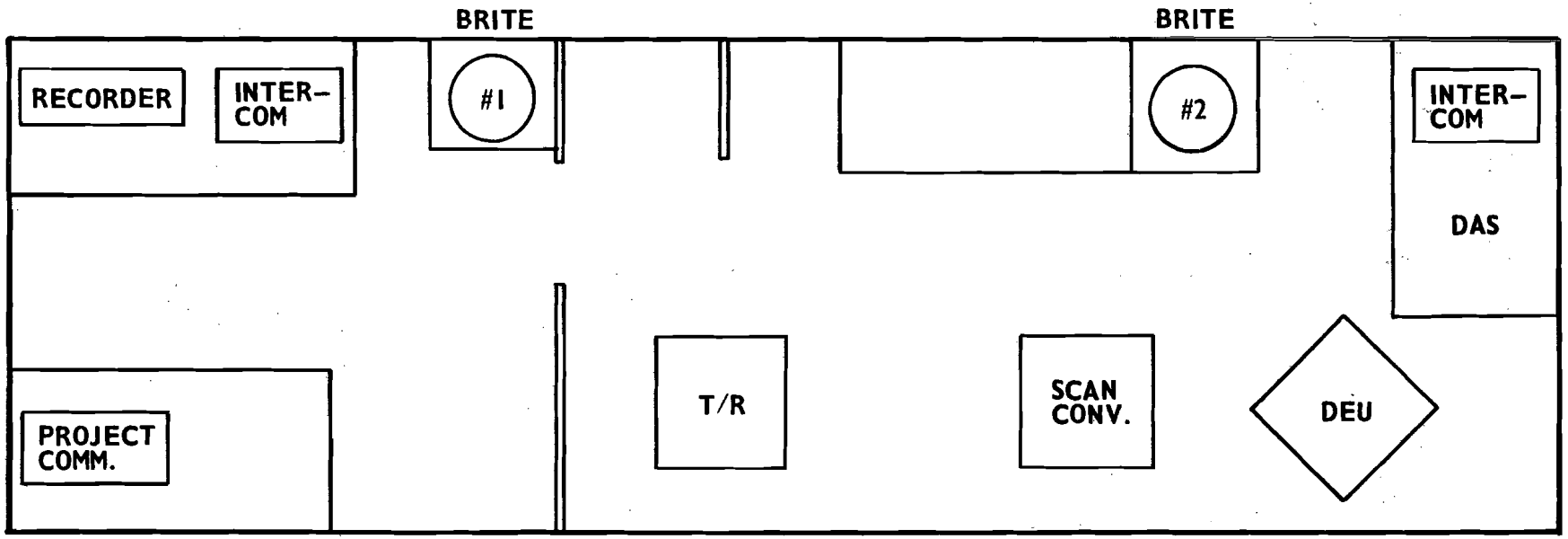

81-6-6

FIGURE 6. ASDE-3 TRAILER LAYOUT

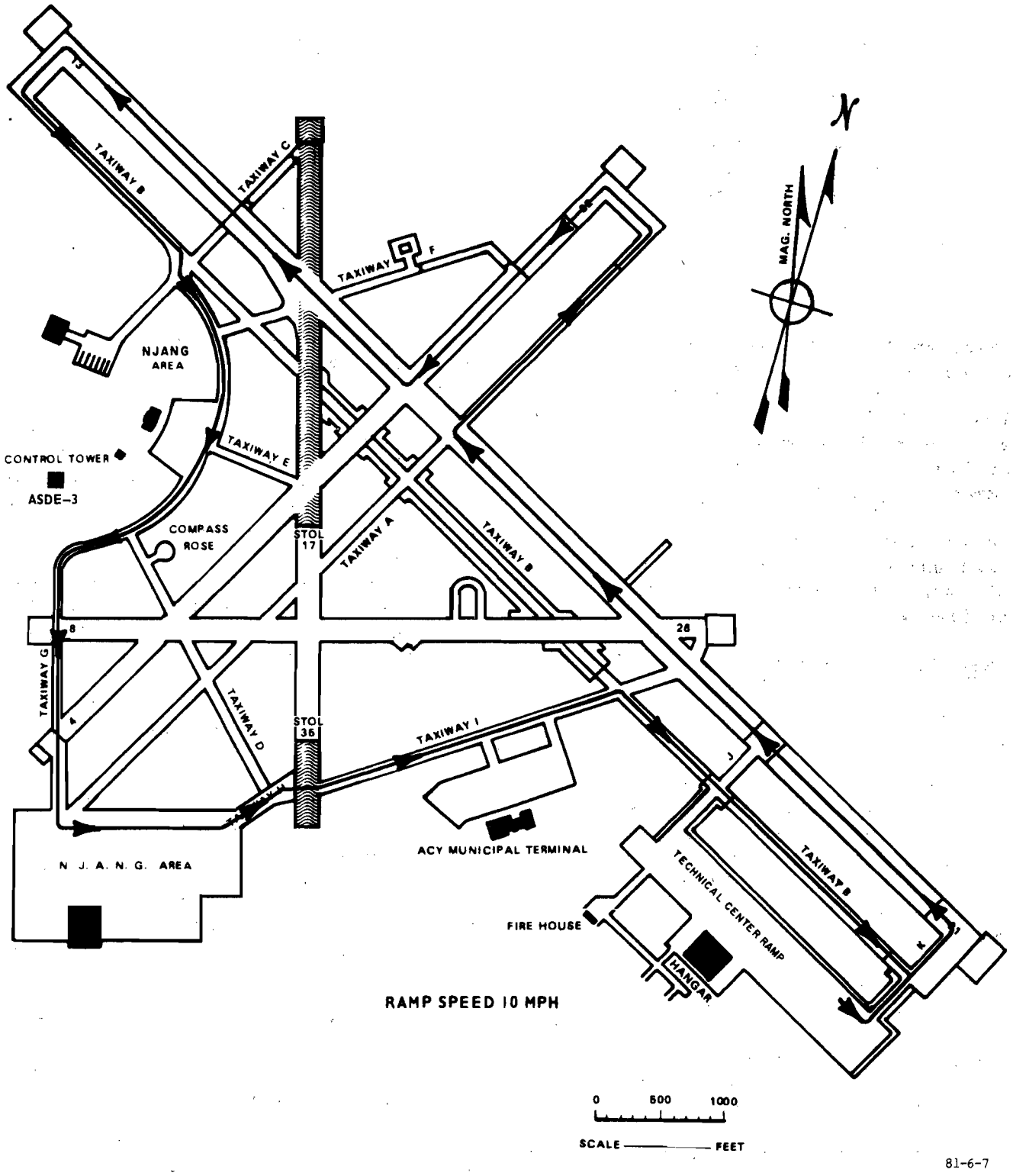

FIGURE 7. AIRPORT COVERAGE — ROUTE TAKEN BY AIRCRAFT AND VEHICLE

TABLE 1. STC ATTENUATION IN dB VERSUS RANGE

Range (feet)	STC Attenuation (dB)
0 - 580	15
580 - 1,161	9
1,161 - 1,742	6
1,742 - 4,645	5
4,645 - 5,226	4
5,226 - 6,387	3
6,387 - 8,129	2
8,129 - 18,000	1

five, one being the weakest and five the strongest. An X signified a complete loss of target. To standardize the limits of the target brightness scale, all controllers were shown samples of numbers one and five fixed targets immediately prior to the test.

In the second test, only the Pinto was used and the DEU was off. Registration of target information on a scale of one to five was the same as above.

RESULTS. Approximately 1,000-foot sections of the traveled route were examined and the mean target response calculated.

Analysis shows that when the DEU was used, the aircraft's target presented a response between 4.0 and 4.5 on a 200-foot runway, 4.08 to 4.22 on a 150-foot runway, 2.83 to 3.92 on a 75-foot taxiway, and 1.33 to 2.67 on a 50-foot taxiway.

Under the same conditions, the Pinto automobile presented a response between 2.58 to 2.83 on a 200-foot runway, 2.50 to 2.67 on a 150-foot runway, 1.42 to 2.17 on a 75-foot taxiway, and 0.92 to 1.17 on a 50-foot taxiway.

When the DEU was not used, the Pinto response was from 1.25 to 2.44 on a 200-foot runway, 1.33 to 1.89 on a 150-foot runway, 0.17 to 1.5 on a 75-foot taxiway, and 0.0 to 1.0 on a 50-foot taxiway.

These tests indicated that adequate target and vehicle coverage were provided over the airport surface.

SPEED TEST. A Technical Center aircraft (Gulfstream G-159 or Convair CV-580) flying on a low approach in a cloverleaf pattern, performed high speed touch and go's on the Center runways 31, 22, and 8. Repeating the pattern, the aircraft made high speed (200 knots) passes over the runways at an altitude of 50 feet above ground level. Upon completion, the cloverleaf pattern was reversed, and the above two flights were repeated on runways 13, 4, and 26. The first half of the tests were performed without the DEU, the second half with a DEU.

The target brightness was rated on a scale of one to five with an X given for a complete loss, as stated in the previous test. Upon completion of the tests, each runway was divided into 2,000-foot segments. An average brightness was calculated for each segment.

RESULTS. There were no target dropouts during the tests. The overall target average was 3.46, with total variation from 3.03 to 3.84, indicating adequate brightness returns during high speed low altitude passes and touch and go's (table 2).

TARGET RESOLUTION. The test sites were parking spot No. 15 on the Technical Center ramp and the northwest corner

TABLE 2. SPEED TEST TARGET BRIGHTNESS AVERAGES ON A SCALE OF 0 TO 5

	Runways		
	13/31	4/22	8/26
Low Pass DEU	3.7	3.65	3.36
Low Pass No DEU	3.49	3.58	3.11
Touch and Go DEU	3.03	3.26	3.24
Touch and Go No DEU	3.56	3.84	3.62
Runway Averages	3.45	3.58	3.33
Total Average 3.46			

of the Air National Guard (ANG) ramp. These sites were 7,500 feet and 1,500 feet from the ASDE-3, respectively.

Two aircraft (two Gulfstreams G-159 or Gulfstream G-159 and Convair CV-580) were used during this test. Aircraft (A/C) No. 1 was parked facing the radar, while A/C No. 2 was slowly towed away from A/C No. 1. Test locations and aircraft orientations and direction of movement are shown in figure 8.

After A/C No. 1 was parked, the site surface was marked with a line along the ASDE-3 beam originating at the nose of the A/C. A second line was made perpendicular to the beam, originating at A/C No. 1's wing tip. Each line was marked off in 5-foot increments.

The test subjects were seated in a position where they could not see each other, but could be seen by the test coordinator. When a test subject detected separation of targets, he motioned to the test coordinator who pressed his microphone button, breaking squelch on the receiver at the aircraft. The aircraft position at that moment was marked, and two successive marks constituted one run.

RESULTS. Tables 3, 4, and 5 list the data from the target resolution tests giving the range and azimuth statistical mean ($\bar{x}$) and standard deviation of sample (s).

During these tests the controllers noted that the entire aircraft did not necessarily provide a radar return. Areas of poor or no returns of the airframe were: (1) the empennage, (2) that portion of a wing beyond the engine to the tip, and (3) flat surfaces parallel to the beam.

The tests of the resolution between two aircraft indicate much smaller target separation than actually resolvable by the radar. In fact, several times target separation was reported with the aircraft 1-foot apart. By replacing one of the aircraft with an automobile (Pinto), the area of uncertainty was reduced by half (as a Pinto presents a more nearly symmetrical target with no appendages). Unfortunately, a small automobile also presents a smaller cross section and, thereby, a smaller reflecting surface, which some of the controllers had trouble resolving against the aircraft target. With the DEU operational, the Pinto target was enhanced on the display and could be seen with greater ease; however, resolution was approximately the same as without DEU as seen in table 4.

With the Pinto target, the test results compare favorably with the radar design parameters, which provide a range cell depth of approximately 36 feet and a 3 dB azimuth antenna beam width of 6.5 feet at 1,500 feet and 33 feet at 7,500 feet.

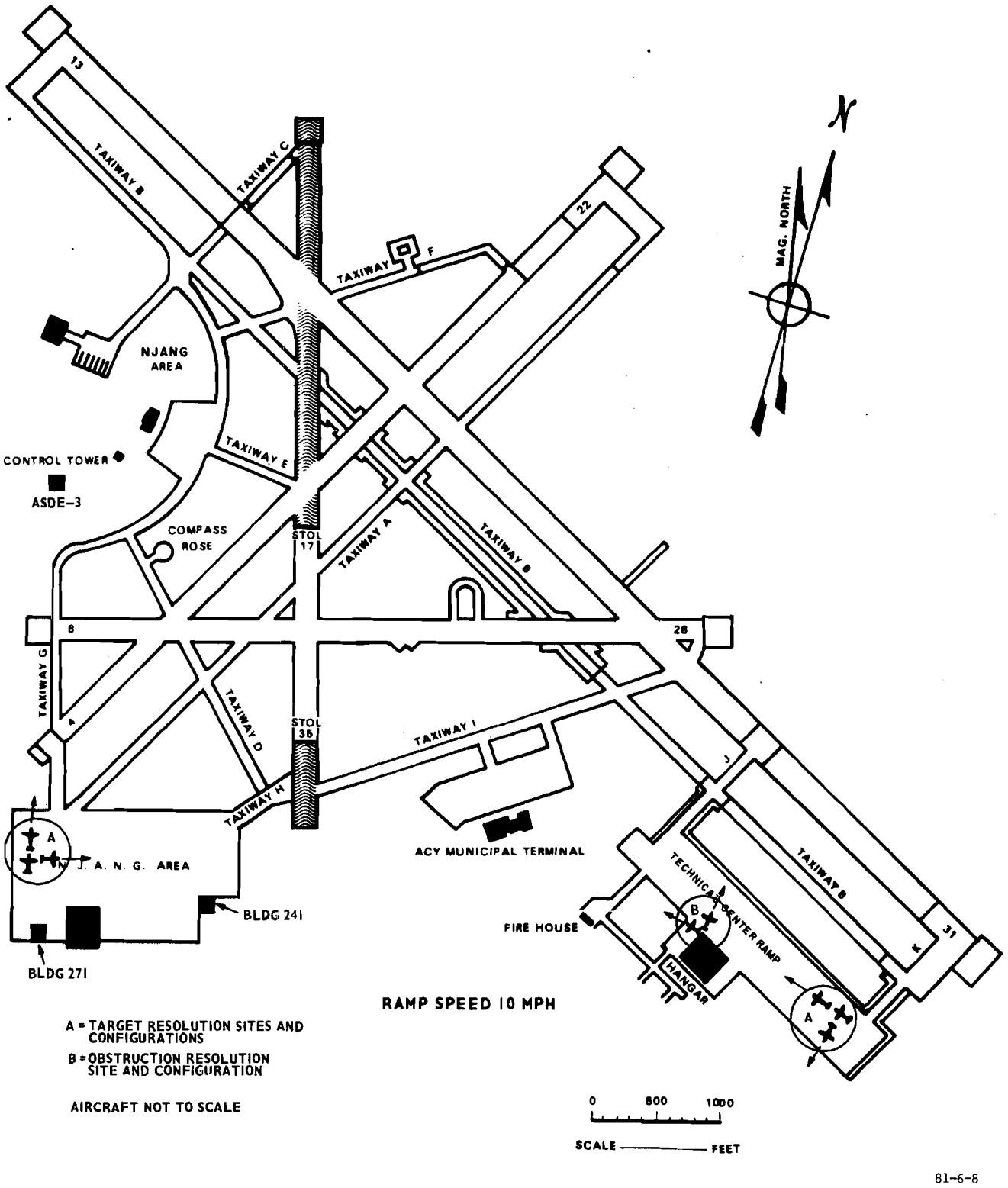

FIGURE 8. TARGET AND OBSTRUCTION RESOLUTION TEST SITES

TABLE 3. TARGET RESOLUTION — TWO AIRCRAFT (7,500-FOOT SITE)

	Range($\bar{x}$) (feet)	Range(s) (feet)	Azimuth($\bar{x}$) (feet)	Azimuth(s) (feet)
DEU	6.17	4.13	14.92	8.07
No DEU	4.67	4.62	24.17	9.69

TABLE 4. TARGET RESOLUTION — AIRCRAFT AND PINTO (7,500-FOOT SITE)

	Range($\bar{x}$) (feet)	Range(s) (feet)	Azimuth($\bar{x}$) (feet)	Azimuth(s) (feet)
DEU	41.16	21.19	27.06	21.27
No DEU	73.89	17.62	20.89	19.93

TABLE 5. TARGET RESOLUTION — TWO AIRCRAFT (1,500-FOOT SITE)

	Range($\bar{x}$) (feet)	Range(s) (feet)	Azimuth($\bar{x}$) (feet)	Azimuth(s) (feet)
No DEU	8.25	7.60	10.13	10.30

OBSTRUCTION RESOLUTION. An aircraft was positioned on the Technical Center ramp near the north corner of the hangar (figure 8), 10 feet from the northwest wall and facing the ASDE. The aircraft was then slowly towed away from the hangar wall until both test subjects resolved the hangar and aircraft into separate targets. This test was repeated. Upon completion, the aircraft was repositioned against the adjacent (northeast) wall of the hangar, 10 feet from the corner and pointing perpendicular to the ASDE beam. The aircraft was, again, slowly moved until notified otherwise by the test coordinator. These tests were also performed using several other structures on the airport and the Pinto automobile.

For these tests, the test subjects were again seated in a position where they could not see each other, but could be seen by the test coordinator. When a test subject detected separation of targets, he motioned to the test coordinator who pressed his microphone button, breaking squelch on the receiver at the aircraft. The aircraft position at that moment was marked, and two successive marks constituted one run (as in the target resolution test). There were cases where two targets could be resolved at the starting point of 10 feet, in which case, the aircraft was moved toward the hangar to within 1 foot of the wall.

Unfortunately, the aircraft tests could be performed only at the northwest corner of the hangar since other locations around the test center did not leave enough maneuvering space. Therefore, obstruction shadowing testing could not be performed. Since a high fence is installed between the hangar and the ASDE, a tall airframe was required to prevent biasing of results, leaving only the Convairs CV-580 and CV-880. The DEU was not used as all the locations were outside the map enhancement areas. These tests were repeated at buildings 241 and 271 (on the ANG Ramp) using the Pinto automobile. The test results are shown in table 6.

The difference between results obtained with the two airframes and with the vehicle is discussed in the preceding test. Again, since the Pinto automobile approaches a symmetrical target, it provides a truer picture of the actual resolution capability.

TARGET SIZE AND SHAPE. The test subjects, under direction of the test coordinator, identified selected targets according to size. Originally, it was intended to use the three standard classifications (small, large, and heavy) used in the Air Traffic Control Handbook 7110.65B, appendix 3. However, the controllers took exception to this system of rating as it was not detailed enough to accurately describe system capabilities. It was agreed to classify the aircraft into four classes (small, medium, large, and heavy). During data reduction, the sizes were reclassified into the original three classes, as specified in the operational test plan, classifying medium as either large or small. The results were then compared against the standard classification list and are shown in table 7.

Analysis of the wrong estimates by aircraft type is shown in table 8. The Error column in table 8 indicates whether the erroneous estimates were larger or smaller on the average than the actual classification by a plus or a minus symbol, respectively.

When conditions precluded airport operations, the target size and shape tests were performed using video recorded targets. These targets were prerecorded at double size to provide line resolution similar to the NU-BRITE display. The results of the recorded tests are shown in table 9.

Comparison of results of live to recorded targets (tables 7 and 9), indicate a high degree of correlation

TABLE 6. OBSTRUCTION RESOLUTION

Frame	Site Bldg No.	Range($\bar{x}$) (feet)	Range(s) (feet)	Azimuth($\bar{x}$) (feet)	Azimuth(s) (feet)	Distance to ASDE-3 (feet)
CV-580	301	16.1	2.6	23.5	4.8	6,000
CV-880	301	5.0	0	42.3	8.4	6,000
Pinto	241	41.2	9.5	50.0	6.9	3,500
Pinto	271	42.5	8.3	42.3	9.4	3,550

TABLE 7. IDENTIFICATION OF TARGETS BY SIZE — PERCENTAGE OF CORRECT ESTIMATES

Aircraft Class	Samples	Wrong Estimates	Percent Correct
Small	227	5	97.8
Large	107	39	63.6
Heavy	48	10	79.2
Total	382	54	85.9

TABLE 8. IDENTIFICATION OF TARGETS BY SIZE — ERROR BREAKDOWN BY AIRFRAME

Aircraft Type	Class	Total Samples	Wrong Estimates	Percent Correct	Error
F-106	Large	54	16	70.4	-
Twin Otter DH-6	Small	42	4	90.5	+
B-747	Heavy	34	2	94.1	-
Kingaire	Small	16	1	93.8	+
Jet Commander	Large	14	9	35.7	-
B-707-300	Heavy	12	5	58.3	-
Jet Star	Large	10	5	50.0	-
Gulfstream G-159	Large	8	7	12.5	-
Falcon Jet	Large	6	2	66.7	-
C-141	Heavy	4	3	25.0	-

TABLE 9. IDENTIFICATION OF RECORDED TARGETS BY SIZE — PERCENTAGE OF CORRECT ESTIMATES

Aircraft Class	Samples	Wrong Estimates	Percent Correct
Small	24	3	87.5
Large	44	9	79.5
Heavy	32	3	90.6
Total	100	15	85.0

between the two tests. In all cases of large and heavy aircraft errors, the aircraft size was underestimated, which is attributed to the poor reflectivity of wing tips and tail surfaces. It was observed that the test subjects went through a learning curve where they repeatedly identified an airframe from the target shape on the display whether correctly identified by target class or not. It is assumed that the 85.9 percent correct estimate figure would have been even higher if the subjects had been corrected the first time they had seen and misidentified a target.

STANDING TARGET HEADING (VIDEO TAPE). Video tape recordings were made of two aircraft, a Convair 580 and a Gulfstream G-159. Test sites were the ends of runway 13/31. Radio communication was established between the aircraft pilot and the video tape recorder operator. The pilot turned the aircraft to a magnetic heading, then informed the operator of that heading. The radar display was then taped and the tape counter read-out was logged along with the heading.

Although the Gulfstream presented a good target on the radar display, the target was symmetrical with practically no distinguishing characteristics; therefore, it was not used during the actual tests.

All video recordings were taped at 2X magnification because the radar display has 1,225 lines and the video monitor only has 525 lines. This made the line resolution of the monitor almost the same as the display. However, there was further degradation of resolution due to secondary recording (a recording made of a NU-BRITE display picture rather than the direct output of the scan converter).

The test subjects viewed the video monitor and recorded aircraft heading. These recorded data were then compared with the master video tape log. Each subject was given seven headings to identify. For two of these headings the DEU was turned off.

RESULTS. Two headings, south and west, were presented while the system was operated without the DEU. The average error for the 12 samples was 58 percent. The error for south was 67 percent and the error for west was 50 percent.

Four headings, north, east, south, and west, were presented while the system was operated with the DEU. The average error for the 30 samples was 23 percent. The error for north was 0.0 percent, east was 0.0 percent, south was 67 percent, and west was 50 percent. The wide variations were due to the subjective nature of the test and to the small sample size.

RUNWAY CLEARANCE DISCRIMINATION. Three sites on the airport surface, which are outlined in figure 9, were used for this test. The intersections utilized were as follows:

1. Technical Center ramp, entering taxiway K.

2. Taxiway K, entering taxiway B.

3. Leaving taxiway B, entering taxiway J.

4. Taxiway J, entering Technical Center ramp.

5. Leaving taxiway B, entering taxiway at end of runway 13.

6. Taxiway at end of runway 13, entering runway 13.

7. Leaving runway 13, entering taxiway C.

8. Taxiway C, entering taxiway B.

9. Taxiway G, entering and leaving runway 8.

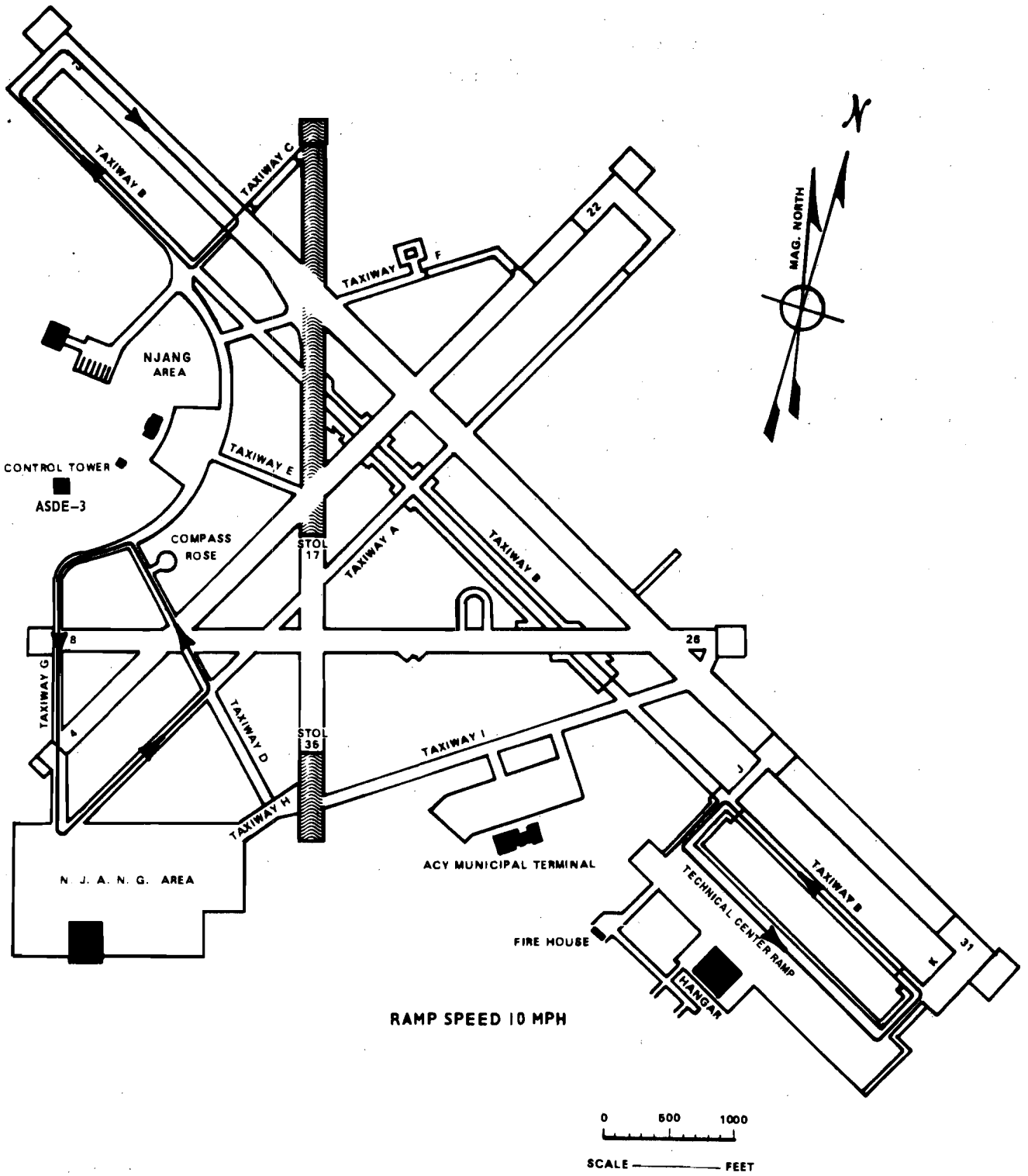

FIGURE 9. RUNWAY CLEARANCE DISCRIMINATION SITES

10. Taxiway D, entering and leaving runway 8.

A Convair 580 taxied the prescribed route under the direction of ground control. Radio communication was established between the aircraft pilot, ground control, test coordinator, and ground observer. The function of the ground observer was to position himself at strategic points so he could visually witness the aircraft entering and leaving an intersection. He signaled via the radio link the instant of each occurrence. Each test subject was positioned in front of a radar display and called nose or tail as the aircraft entered or left an intersection. These responses were picked up by a microphone which was attached to a four-channel audio tape recorder. Each controller had his own microphone and tape channel. The ground observer's transmissions were also taped on another channel.

The test was conducted with the DEU off and then on. The aircraft taxi speed was approximately 15 miles per hour (mph) at the intersections.

Data were extracted from the tape by outputting each channel to a separate speaker. A stop watch was used to time the responses, the ground observer being the reference. An "early" time was assigned if the controller's response preceded the reference and a "late" time if the reference preceded the controller. "On" time was assigned if the controller and the reference responses were simultaneous.

RESULTS. Tables 10 and 11 are the reduced data of this test. In table 10, the early value of NOSE is the time in seconds that the controllers saw the aircraft enter the intersection before it actually did. The late value is the time before the aircraft had already entered the intersection.

Since the data are a composite of all the intersections tested, any data skewing due to the aircraft aspect with relation to the ASDE-3 site is cancelled out.

Table 11 indicates a greater data dispersion than table 10. The greater numbers for the tail position are due to the target trail during aircraft movement. Lower numbers are not to be expected at operational sites since: (1) the design minimum point target resolution is 30 feet, (2) an aircraft at 15 mph moves 21 feet between radar scans, (3) a moving aircraft leaves a velocity-dependent trail, and (4) 11 feet scan converter resolution. An analysis of these errors is in appendix B.

Analysis of the data shows the DEU helpful when an aircraft is entering an intersection, while it is of no help when an aircraft is clearing it.

CONTROLLER QUESTIONNAIRE RESULTS.

Upon completion of the tests, each group of subjects was given a series of questions to answer about their impression of the ASDE-3. A summary of these answers is given below.

1. All subjects tested worked at sites equipped with ASDE-2 and were acquainted with the ASDE-2 operation.

2. All the test subjects saw a large improvement in the operational usefulness of the ASDE-3 over the ASDE-2.

3. Considering individual functions or parts of the ASDE-3 versus ASDE-2, the composite controllers' responses are shown in table 12.

4. The effectiveness of unit controls and indicators of the ASDE-3 as they affect the controllers' responses in an operational setting are shown in table 13.

TABLE 10. RUNWAY CLEARANCE DISCRIMINATION — NOSE (TIME IN SECONDS)

	DEU				NO DEU			
	Collective Time	On Time	Early Estimate	Late Estimate	Collective Time	On Time	Early Estimate	Late Estimate
Samples	111	9	31	72	45	11	12	22
Mean	0.78	0	1.61	1.98	0.12	0	2.60	1.66
Standard Deviation	1.04	0	1.00	1.54	2.34	0	2.37	1.35

TABLE 11. RUNWAY CLEARANCE DISCRIMINATION — TAIL (TIME IN SECONDS)

	DEU				NO DEU			
	Collective Time	On Time	Early Estimate	Late Estimate	Collective Time	On Time	Early Estimate	Late Estimate
Samples	110	8	18	84	41	8	3	30
Mean	2.16	0	1.30	3.11	2.12	0	1.27	3.03
Standard Deviation	3.04	0	1.12	2.82	2.64	0	0.67	2.51

TABLE 12. FUNCTIONAL COMPARISON OF ASDE-3 TO ASDE-2

	Much Better	Slightly Better	Same	Not As Good
Display crispness	5	1	-	-
Flicker free display	2	2	2	-
Display clutter	4	2	-	-
Affect of ambient light	1	1	4	-
Target detection	5	1	-	-
Target resolution	5	1	-	-
Displayed target position accuracy	5	-	1	-
Runway presentation without DEU	1	5	-	-

- no response

TABLE 13. EFFECTIVENESS OF UNIT CONTROLS AND INDICATORS

	Fine As Is*	Needs Improvement*	Totally Unacceptable*	Not Needed During Test*
Display control unit map	4	2	-	-
Display control unit background	6	-	-	-
Display control unit threshold	4	-	-	-
TV display control brightness	6	-	-	-
TV display control contrast	6	-	-	-
TV display control video	5	1	-	-
TV display control composite	6	-	-	-
DEU - background video	6	-	-	-
DEU - map line intensity	5	1	-	-
DEU - threshold setting	3	-	-	-
DEU - range offset	6	-	-	-
DEU - range control	6	-	-	-
DEU - off-centering control	6	-	-	-
DEU - brightness	6	-	-	-
DEU - contrast	6	-	-	-
DEU - analog scan erase	6	-	-	-
DEU - set presentation selector	6	-	-	-
Radar control unit - T/R control indicator	5	-	-	-
Radar control unit - radome heat	5	-	-	-
Radar control unit - antenna drive	4	-	-	-
Radar control unit - radar power	4	-	-	-

- no reponse
* numbers under column heads indicate number of controllers selecting results.

5. Operational usefulness.

a. All controllers saw much use for the ASDE-3 at their site.

b. Operationally the best aspects of the ASDE-3 are, in order of importance (the number preceeding each statement is the number of subjects selecting that category): (1) 5-DEU/map, 1-heavy weather operation (each team observed moderate to heavy rain and fog during the test; snow or ice conditions were not encountered during the test period); (2) 2-weather operation, 1-antenna, 1-map, 1-resolution; and (3) 2-variable range controls, 1-sharpness of display.

c. Operationally, the worst aspect of the ASDE-3 was that one subject felt that the 1-DEU map needs improvement in accuracy and line width before going to the field.

d. Other improvements needed are: (1) possibly a beacon return, and (2) add alphanumerics for positive identification, such as Tower Automated Ground Surveillance System (TAGS).

6. Comparison to Air Traffic Service's requirements. In response to the operational test plan questionaire, all subjects stated that: "In its present state, the ASDE-3 completely conforms to the Air Traffic Services requirements." The test subjects' general comments were:

a. "If the runway end was fanned about 20° with the DEU map lines, an A/C would be 'painted' on final approach prior to landing. I believe this would be a great help if the weather was solid IFR" (Instrument Flight Rules).

b. The ASDE-3 radar antenna noise level in the equipment room, located 6 feet below the rotating antenna, was "very quiet."

c. "Airports which are level four or five and have ASDE, should be equipped with two complete sets of BRITE radar display access controls ASDE-3 DEU in order to allow the independent use by the ground controller to get better aircraft definition by use of shorter range usage where he may not have to monitor complete airport area at all times. This will allow the local controller some flexibility at the same time in his operation of the ASDE-3 DEU."

d. Sector Blanking. "This could possibly be a distraction. If this is incorporated in the system, the control should be available to the controller." (Sector blanking is a requirement for spectrum approval.)

e. Control unit selector of two presentations. "The time to switch, erase, and readjust to the new setting could cause confusion of position of aircraft. This feature may have use at some facilities."

SUMMARY OF RESULTS

Results of the ASDE-3 operational tests indicate that:

1. Aircraft and vehicular targets were visible on all runways and taxiways with the exception of certain portions of the 50-foot wide perimeter taxiway where a Pinto automobile momentarily disappeared.

2. High speed (200 knots at 50-foot altitude) targets were tracked over all the Technical Center runways with no target dropouts.

3. Target resolution: resolution between aircraft and vehicles averaged 41 feet in range and 27 feet in azimuth at a 7,500-foot distance from the radar. The resolution between aircraft is similar to the resolution between aircraft and vehicles. Excellent results are due to the poor reflectivity of portions of the aircraft.

4. Obstruction resolution for a vehicle averaged 42 feet in range and 45 feet in azimuth at a distance of 3,500 feet. For aircraft, the resolution was 16 and 5 feet in distance and 23.5 and 42 feet in azimuth for a Convair CV-580 and a CV-880, respectively, at a distance of 6,000 feet. Excellent results are due to the poor reflectivity of portions of the aircraft.

5. Target size identification tests resulted in 98 percent correct estimates for small, 64 percent for large, and 79 percent for heavy live targets. The overall correct estimate average was 85.9 percent. Video recorded target estimates were 87 percent correct for small, 79 percent for large, and 91 percent for heavy targets. Overall correct estimate average for recorded targets was 85 percent.

6. The average error in standing target headings was 23 percent with the DEU and 58 percent without the DEU for a Convair CV-580.

7. During the runway clearance discrimination test, the average for aircraft entering a runway was 0.78 seconds (17 feet) late with DEU and 0.12 seconds (2.6 feet) late without DEU. Results for the aircraft exiting a runway are 2.16 seconds (47.5 feet) late with DEU and 2.12 seconds (46.6 feet) late without DEU. The high numbers for exiting aircraft are due to the target trail behind a moving aircraft on the display.

8. System operation was not degraded during periods of heavy rain or fog.

CONCLUSIONS

From the test and questionnaire results, it was concluded that:

1. The Airport Surface Detection Equipment (ASDE)-3 provides adequate airport coverage for detection of aircraft and service vehicles on the Atlantic City Airport surface.

2. The ASDE-3 provided good detection of high speed low altitude targets.

3. The target resolution requirement (25 feet) was not met in range or azimuth using an aircraft and vehicle or two aircraft as test targets.

4. The ASDE-3 will provide correct target size estimates approximately 85 percent of the time. This number can be increased as the controller memorizes aircraft shapes along with their classification.

5. Target heading discrimination capability was poor, being very dependent on the type of airframe under test and its orientation with respect to the radar.

6. Although the average position of the moving aircraft nose was within 17 feet of the runway intersection edge, a one standard deviation value of +45 feet exceeded the 20-foot requirement. The tail position estimate was approximately three times greater with a standard deviation of +67 feet.

7. The operational displays are clear of clutter, flicker free, of uniform brightness, and are continuously usable in all light conditions. The outlines of all runways, taxiways, and holding areas are clearly discernible.

8. The system provides a clear picture under conditions of heavy rain and fog.

9. The antenna noise level is non-distractive. Vibration in the cab due to the antenna rotation is very low.

RECOMMENDATIONS

Based on the operational test results, it is recommended that:

1. The airport surface detection equipment (ASDE)-3 system be considered for implementation at field facilities.

2. An extended evaluation of the system be performed utilizing local controllers during periods of heavy rain, fog, and snow. For this purpose, an ASDE-3 display would be remoted to the Atlantic City Tower.

APPENDIX A

OUTLINE OF OPERATIONAL REQUIREMENTS

On April 26, 1977, ARD-100 received the following outline of operational requirements for Airport Surface Detection Equipment (ASDE)-3 from AAT-100.

1. Independent displays at local and ground control positions with individual offset, variable range, intensity, and associated operational controls are required at each site.

2. The operational displays must be clear of clutter, flicker free, of uniform brightness, and continuously usable in all light conditions. The outline of all runways, taxiways, and instrument landing system (ILS) critical holding areas must be clearly discernible.

3. The operational displays must have a presentation with enough clarity to determine aircraft heading when standing, and to distinguish between small aircraft (Category I, II)/service vehicles, large and heavy aircraft (Category III) by size/shape of the target displayed. This display clarity must be present under all weather conditions including heavy rain, snow, fog, etc.

4. The actual position of the aircraft must be within 20 feet of the displayed target position. These targets must be well defined and blooming eliminated.

5. Provide complete coverage at airports with obstructing buildings such as large hangars. Eliminate shadowing on the movement area.

6. The radar must be a high resolution radar capable of detecting all aircraft and service vehicles operating on the runways and taxiways. This includes those taxiways immediately adjacent to the gate/ramp areas.

7. The operational displays must be of high resolution to permit high speed targets such as an F-4 Fighter Jet (that has a landing speed of 165 knots) to be continuously discernible.

8. ASDE radar must have target resolution of 25 feet or less on the operational display of all targets at an altitude of at least 100 feet and below. This will provide air traffic control (ATC) with arrival and departure assurance.

9. The antenna noise level must be nondistractive. Where the antenna is mounted on the tower, vibration in the cab must be eliminated when the antenna rotates.

APPENDIX B

MOVING TARGET POSITION ERROR ANALYSIS

The moving target position errors on an Airport Surface Detection Equipment (ASDE)-3 display fall into four categories.

1. Errors due to the time between plan position indicator (PPI) sweeps.

2. Errors due to the scan converter/New Brite Radar Indicator Tower Equipment (NU-BRITE) display raster.

3. Pulse shaping and antenna radiation pattern errors.

4. Vidicon target voltage delay errors.

Considering these errors one at a time, the most obvious is the sweep error. Since the ASDE-3 antenna is rotating at 62 revolutions per minute (rpm), the PPI sweep will cross the moving target approximately once per second, forming a series of trailing images on the NU-BRITE display screen. The error itself occurs when the exact target position is required at time T, which may or may not be coincidental with the sweep crossing of the target. The error bounds are $T_0-T_1 = 0$ seconds where the required target position and sweep are coincidental, and 0.97 seconds or the time of the next sweep. Since displayed targets always indicate the past history of the target, the error is cumulative in the positive direction. The maximum distance a target will have traveled during this time is shown in equation B-1.

$$Es = NV \tag{B-1}$$

where Es = error due to sweep time, N = time required for an antenna revolution (in this case 0.97 seconds), and V = target velocity in feet/second (22 feet/second used in testing).

For the above conditions Es = 21.29 feet.

Ideally, for a small target, the raster error (Er) would vary as

$$Er = \frac{2R}{S \cos \theta} \tag{B-2}$$

Where R = coverage radius of the display in feet (for the Atlantic City Airport R is considered 6,500 feet).

S = number of scan lines per frame (1,225).
θ = the target true bearing (assuming display north is at zero degrees).

However, due to the transmited pulse rise and fall times of 9 nanoseconds (ns) each, and the antenna horizontal beam width of 0.25°, a Swerling 1.5 square meter (m^2) calibrated target was measured as covering 38 feet in depth and 52 feet in azimuth at a range of 8,800 feet. The target (regardless of size) covers at least several raster scan lines and equation 2 simplifies to

$$ER = \frac{2R}{S}.$$

For a full display of the Atlantic City Airport, the raster error is therefore approximately 11 feet. Since a target is not seen between raster scan lines, and the critical scan lines is the one the target is next approaching, the error is also cumulative and positive.

The pulse shaping and radiation pattern errors (E_t) mentioned above can be calculated as accounting for a target dispersion of 36 feet in depth, and 38 feet in width (for a 0.25 antenna beam width at the 3 decibel (dB) points). However, pulse stretching occurring in the receiver and display circuits degrades pulse shape and, therefore, range accuracy. Also, the dynamic range of the receiver is 20 dB and the antenna beam width at 20 dB down is 0.57° (measured). These factors result in the larger target measured dispersion noted above. This error (E_t), when using a Display Enhancement Unit (DEU), is also cumulative, due to the position relationship of the degraded target versus the sharp DEU generated map lines. Since the apparent target precedes its actual position, it is negative in the direction of target movement and positive following the target. The average error in system accuracy when using the DEU due to E_t (range and azimuth), as calculated from the measured system performance is, therefore, approximately 22 feet. Without the DEU, both the moving target as well as its surroundings are equally smeared and the error becomes random rather than cumulative. The 22-foot figure determined above will vary since the azimuth component is range dependent (determined by the 2-way antenna beam width). The error is also subject to overriding variations in nonsymmetrical targets.

The primary contributing factor to error generated by the scan converter (E_v) is a time-dependent trail on a moving target. This trail is generated by the vidicon tube in the scan converter camera. (Both the scan converter PPI and the NU-BRITE display contain fast decay phosphors.) The video decay on the ASDE-3 vidicon tube reaches 90 percent full voltage within 0.05 to 0.1 seconds, and in 1 second (one antenna scan) the decay averages 41 percent of full voltage. Since a 6 dB difference in video target brightness should be resolvable by trained subjects, the moving target trail error (E_v) will be considered to be 22 feet. The video decay time of the tubes in stock were found to vary by as much as 100 percent.

Assuming that the nose and tail of the moving target are visible, the cumulative error expected in normal system operation (DEU on) will be:

$$E_{nose} = E_s - Er + E_t$$

$$= 21 \text{ feet} - 11 \text{ feet} + 22 \text{ feet} = -10 \text{ feet}$$

$$E_{tail} = -E_s - E_r - E_t - E_v$$

$$-21 \text{ feet} - 11 \text{ feet} - 22 \text{ feet} - 22 \text{ feet} = -76 \text{ feet}$$

These results agree with the time distribution of the test data in tables 10 and 11 of the report.

APPENDIX C

SUBJECT CONTROLLER QUESTIONNAIRE
ASDE-3

1. Have you regularly worked an operational position at which ASDE was available?

_____ yes Go to section 2.
_____ no Go to section 3.

2. ASDE-2/ASDE-3 Comparison

2a. Compare the over-all operational usefulness of ASDE-3 versus ASDE-2.

_____ large improvement
_____ slight improvement Go to question 2c.
_____ same
_____ not as good Go to question 2b.

2b. Why? _____

_____

2c. Consider individual functions or parts of the ASDE-3 versus ASDE-2.

	much better	slightly better	same	not as good*
Display crispness	_____	_____	____	_____
Flicker free display	_____	_____	____	_____
Display clutter	_____	_____	____	_____
Affect of ambient light	_____	_____	____	_____
Target detection	_____	_____	____	_____
Target resolution	_____	_____	____	_____
Displayed target position accuracy	_____	_____	____	_____
Runway presentation without DEU	_____	_____	____	_____

*For each check in the "not as good" column, please explain your opinion fully on the back of this page.

3. Unit Controls and Indicators.

In this section we will be considering the various controls and indicators of the ASDE-3 as they affect you, the controller, in an operational setting.

Please rate each with one of the following:

1. Fine as is
2. Needs improvement.
3. Totally unacceptable.
4. Not needed during test.

Please comment on the back of this page if answer is #2 or #3.

_____ Display Control Unit - map
_____ Display Control Unit background
_____ Display Control Unit threshold
_____ TV Display Control - brightness
_____ TV Display Control contrast
_____ TV Display Control video
_____ TV Display Control composite
_____ DEU - background video
_____ DEU - map line intensity
_____ DEU - threshold setting
_____ DEU - range offset
_____ DEU - range control
_____ DEU - brightness
_____ DEU - contrast
_____ DEU - analog scan erase
_____ DEU - set presentation selector
_____ Radar Control Unit - T/R control indicator
_____ Radar Control Unit - radome heat
_____ Radar Control Unit - antenna drive
_____ Radar Control Unit - radar power

4. Operational Usefulness

4a. I can see (much, some, little, no) use for the ASDE-3 at my site. (circle one)

4b. Operationally the best aspect of the ASDE-3 are (in order of importance):

_____

_____

_____

4c. Operationally the worst aspects of the ASDE-3 are (in order of importance):

_____

_____

_____

4d. Essential improvements needed by the ASED-3 are (in order of importance):

_____

_____

_____

4e. Other improvements needed are: _____

_____

_____

5. Comparison to Air Traffic Service's Requirements.

In its present state, the ASDE-3 conforms to the Air Traffic Service's requirements:

_____ completely.

_____ except as follows: _____

_____

We appreciate your cooperation and your considerable contribution towards the success of this project. Any further comments you may have will be appreciated and may be placed on the back of this page.