COPY 1

DOT/FAA/RD-82/43

Systems Research &
Development Service
Washington, D.C. 20591

FAA WJH Technical Center
00026826

Instrument Landing System Localizer Receiver Performance in the Presence of Co-channel Interference

FEDERAL AVIATION ADMINISTRATION

AUG 30 1982

TECHNICAL CENTER LIBRARY
ATLANTIC CITY, N.J. 08405

Eldon J. Haakinson
U.S. Department of Commerce
National Telecommunications and Information Administration
Institute for Telecommunications Sciences
Boulder, Colorado 80303

July 1982

Final Report

This document is available to the U.S. public through the National Technical Information Service, Springfield, Virginia 22161.

DOT/FAA
RD-82/43

U.S. Department of Transportation
Federal Aviation Administration

NOTICE

This document is disseminated under the sponsorship of the Department of Transportation in the interest of information exchange. The United States government assumes no liability for its contents or use thereof.

Technical Report Documentation Page

1. Report No.	2. Government Accession No.	3. Recipient's Catalog No.
DOT/FAA/RD-82/43		

4. Title and Subtitle	5. Report Date
INSTRUMENT LANDING SYSTEM LOCALIZER RECEIVER PERFORMANCE IN THE PRESENCE OF CO-CHANNEL INTERFERENCE	July 1982
	6. Performing Organization Code: NTIA/ITS-1
7. Author(s): Eldon J. Haakinson	8. Performing Organization Report No.
9. Performing Organization Name and Address: National Telecommunications & Information Admin. Institute for Telecommunication Sciences 325 Broadway, Boulder, CO 80303	10. Work Unit No. (TRAIS)
	11. Contract or Grant No.: DTFA01-81-Y-10534
12. Sponsoring Agency Name and Address: U.S. Department of Transportation Federal Aviation Administration Systems Development Division Washington, DC 20590	13. Type of Report and Period Covered: Final
	14. Sponsoring Agency Code: ARD-450

15. Supplementary Notes

16. Abstract

Co-channel signals can cause harmful interference to navigational aid systems such as the Instrument Landing System. This report describes the performance of four localizer receivers in the presence of interference from co-channel CW, PSK, FSK, and FM signals. The receiver parameters monitored during the measurements were course deviation voltage, warning flag voltage, AGC voltage, and audio distortion. Measurement results are reported as the minimum signal-to-interference ratio required to keep each monitored parameter from exceeding specified bounds.

Course deviation voltage is the most sensitive parameter to the co-channel interference. The CW and PSK modulation interference seemed to be more harmful than co-channel FSK or FM modulation interference. A signal-to-interference ratio of 20 dB was required by the four receivers to ensure that the course deviation error was not more than 15 μA when co-channel CW or PSK interference was present, and when the frequency of the undesired signal did not coincide with the 90 or 150 Hz navigation subcarriers.

17. Key Words	18. Distribution Statement
instrument landing system; ILS; interference; localizer; signal-to-interference measurements	Document is available to the U.S. public through the National Technical Information Service, Springfield, Virginia 22161

19. Security Classif. (of this report)	20. Security Classif. (of this page)	21. No. of Pages	22. Price
Unclassified	Unclassified	50	

Form DOT F 1700.7 (8-72) Reproduction of completed page authorized

English/Metric Conversion Factors

Length

From \ To	Cm	m	Km	in	ft	s mi	nmi
Cm	1	0.01	1×10^{-5}	0.3937	0.0328	6.21×10^{-6}	5.39×10^{-6}
m	100	1	0.001	39.37	3.281	0.0006	0.0005
Km	100,000	1000	1	39370	3281	0.6214	0.5395
in	2.540	0.0254	2.54×10^{-5}	1	0.0833	1.58×10^{-5}	1.37×10^{-5}
ft	30.48	0.3048	3.05×10^{-4}	12	1	1.89×10^{-4}	1.64×10^{-4}
S mi	160,900	1609	1.609	63360	5280	1	0.8688
nmi	185,200	1852	1.852	72930	6076	1.151	1

Area

From \ To	Cm^2	m^2	Km^2	in^2	ft^2	S mi^2	nmi^2
Cm^2	1	0.0001	1×10^{-10}	0.1550	0.0011	3.86×10^{-11}	5.11×10^{-11}
m^2	10,000	1	1×10^{-6}	1550	10.76	3.86×10^{-7}	5.11×10^{-7}
Km^2	1×10^{10}	1×10^{6}	1	1.55×10^{9}	1.08×10^{7}	0.3861	0.2914
in^2	6.452	0.0006	6.45×10^{-10}	1	0.0069	2.49×10^{-10}	1.88×10^{-10}
ft^2	929.0	0.0929	9.29×10^{-8}	144	1	3.59×10^{-8}	2.71×10^{-8}
S mi^2	2.59×10^{10}	2.59×10^{6}	2.590	4.01×10^{9}	2.79×10^{7}	1	0.7548
nmi^2	3.43×10^{10}	3.43×10^{6}	3.432	5.31×10^{9}	3.70×10^{7}	1.325	1

Volume

From \ To	Cm^3	Liter	m^3	in^3	ft^3	yd^3	fl oz	fl pt	fl qt	gal
Cm^3	1	0.001	1×10^{-6}	0.0610	3.53×10^{-5}	1.31×10^{-6}	0.0338	0.0021	0.0010	0.0002
liter	1000	1	0.001	61.02	0.0353	0.0013	33.81	2.113	1.057	0.2642
m^2	1×10^{6}	1000	1	61,000	35.31	1.308	33,800	2113	1057	264.2
in^3	16.39	0.0163	1.64×10^{-5}	1	0.0006	2.14×10^{-5}	0.5541	0.0346	2113	0.0043
ft^3	28,300	28.32	0.0283	1728	1	0.0370	957.5	59.84	0.0173	7.481
yd^3	765,000	764.5	0.7646	46700	27	1	25900	1616	807.9	202.0
fl oz	29.57	0.2957	2.96×10^{-5}	1.805	0.0010	3.87×10^{-5}	1	0.0625	0.0312	0.0078
fl pt	473.2	0.4732	0.0005	28.88	0.0167	0.0006	16	1	0.5000	0.1250
fl qt	946.3	0.9463	0.0009	57.75	0.0334	0.0012	32	2	1	0.2500
gal	3785	3.785	0.0038	231.0	0.1337	0.0050	128	8	4	1

Mass

From \ To	g	Kg	oz	lb	ton
g	1	0.001	0.0353	0.0022	1.10×10^{-6}
Kg	1000	1	35.27	2.205	0.0011
oz	28.35	0.0283	1	0.0625	3.12×10^{-5}
lb	453.6	0.4536	16	1	0.0005
ton	907,000	907.2	32,000	2000	1

Temperature

$^{o}C = 9/5\ (^{o}F - 32)$

$^{o}F = 5/9\ (^{o}C) + 32$

TABLE OF CONTENTS

Page

LIST OF TABLES iv
LIST OF FIGURES v
ABSTRACT 1
1. INTRODUCTION 1
2. LOCALIZER SYSTEM AND RECEIVERS 2
3. MEASUREMENT PROCEDURE 2
4. MEASUREMENT RESULTS 7
5. CONCLUSIONS 19
6. REFERENCES 20
APPENDIX A. LIST OF SYMBOLS 21
APPENDIX B. INTERFERENCE EFFECTS ON ILS AND MLS: AN ANNOTATED BIBLIOGRAPH 22

LIST OF TABLES

Page

Table 1. Characteristics of Localizer Receivers..... 4

Table 2. Interference Signal Parameters..... 5

Table 3. Localizer Receiver Parameter Error Bounds..... 5

Table 4. Measurement Signal Levels..... 6

Table 5. Performance of Localizer Receiver A In the Presence of Co-channel CW Interference..... 8

Table 6. Performance of Localizer Receiver B In the Presence of Co-channel CW Interference..... 8

Table 7. Performance of Localizer Receiver C In the Presence of Co-channel CW Interference..... 9

Table 8. Performance of Localizer Receiver D In the Presence of Co-channel CW Interference..... 9

Table 9. Performance of Localizer Receiver A In the Presence of Co-channel PSK Interference..... 10

Table 10. Performance of Localizer Receiver B In the Presence of Co-channel PSK Interference..... 10

Table 11. Performance of Localizer Receiver C In the Presence of Co-channel PSK Interference..... 11

Table 12. Performance of Localizer Receiver D In the Presence of Co-channel PSK Interference..... 11

Table 13. Performance of Localizer Receiver A In the Presence of Co-channel FSK Interference..... 12

Table 14. Performance of Localizer Receiver B In the Presence of Co-channel FSK Interference..... 12

Table 15. Performance of Localizer Receiver C In the Presence of Co-channel FSK Interference..... 13

Table 16. Performance of Localizer Receiver D In the Presence of Co-channel FSK Interference..... 13

Table 17. Performance of Localizer Receiver A In the Presence of Co-channel FM Interference..... 14

Page

Table 18. Performance of Localizer Receiver B In the Presence of Co-channel FM Interference..... 14

Table 19. Performance of Localizer Receiver C In the Presence of Co-channel FM Interference..... 15

Table 20. Performance of Localizer Receiver D In the Presence of Co-channel FM Interference..... 15

Table 21. Localizer Receiver Course Error Performance in the Presence of Co-Channel CW Interference..... 16

Table 22. Localizer Receiver Course Error Performance in the Presence of Co-Channel PSK Interference..... 16

Table 23. Localizer Receiver Course Error Performance in the Presence of Co-Channel FSK Interference..... 17

Table 24. Localizer Receiver Course Error Performance in the Presence of Co-Channel FM Interference..... 17

Table 25. Comparison of Measurement Results When CW Interference is 90 or 150 Hz ±2Hz Frequency Offset From Localizer Signal's Carrier Frequency..... 18

LIST OF FIGURES

Figure 1. Signal-to-interference ratio measurement block diagram... 3

INSTRUMENT LANDING SYSTEM LOCALIZER RECEIVER PERFORMANCE IN THE PRESENCE OF CO-CHANNEL INTERFERENCE

Eldon J. Haakinson*

Co-channel signals can cause harmful interference to navigational aid systems such as the Instrument Landing System. This report describes the performance of four localizer receivers in the presence of interference from co-channel CW, PSK, FSK, and FM signals. The receiver parameters monitored during the measurements were course deviation voltage, warning flag voltage, AGC voltage, and audio distortion. Measurement results are reported as the minimum signal-to-interference ratio required to keep each monitored parameter from exceeding specified bounds.

Course deviation voltage is the most sensitive parameter to the co-channel interference. The CW and PSK modulation interference seemed to be more harmful than co-channel FSK or FM modulation interference. A signal-to-interference ratio of 20 dB was required by the four receivers to ensure that the course deviation error was not more than 15 μA when co-channel CW or PSK interference was present, and when the frequency of the undesired signal did not coincide with the 90 or 150 Hz navigation subcarriers.

Key words: instrument landing system; ILS; interference; localizer; signal-to-interference measurements

1. INTRODUCTION

National and international guidelines are required to protect aircraft navigational aids from harmful interference. In order to establish reasonable guidelines, laboratory measurements are needed to determine how contemporary navigation receivers perform in the presence of various types and levels of interference. The Federal Aviation Administration (FAA) contracted with the Institute for Telecommunication Sciences (ITS) to perform a limited set of measurements on a group of Instrument Landing System (ILS) receivers. In particular, we measured the performance of four localizer receivers with co-channel interference. We used four modulation modes for the interference signal that included continuous wave (CW), phase-shift-keying (PSK), frequency-shift-keying (FSK), and frequency modulation (FM). The PSK, FSK,

*The author is with the Institute for Telecommunication Sciences, National Telecommunications and Information Administration, U.S. Department of Commerce, 325 Broadway, Boulder, Colorado 80303.

and FM interference signals had a set of specific characteristics; if the performance of signals with characteristics other than those we chose is desired, then scaling the results presented in this report by the ratio of the bandwidths should give a first-order approximation to the performance. An example is given later in the report.

2. LOCALIZER SYSTEM AND RECEIVERS

The ILS localizer is a ground-based radio system which is designed to give lateral guidance to aircraft with respect to a runway center line. The localizer carrier is modulated at 90 and 150 Hz in a spatial pattern that makes the 90-Hz modulation exceed the 150-Hz modulation when the aircraft is to the left of the course, with a difference in depth of modulation (ddm) between the 90-Hz and 150-Hz signals that is proportional to the angular displacement from the course center line. The localizer display shows a "fly right" indication to the pilot when the 90-Hz signal dominates. To the right of the course center line, the 150-Hz signal is greater than the 90-Hz signal; thus the localizer display shows a "fly left" indication.

Four localizer receivers were obtained through the FAA from manufacturers or government agencies. The four receivers included two models used primarily by general aviation aircraft and two used by commercial aircraft. The four receivers were tested to determine receiver sensitivity and selectivity. In this case, receiver sensitivity is defined as the minimum signal at which the standard deflection, 0.093 difference in depth of modulation (ddm), can be obtained without displaying a warning flag. The receivers' measured and specified characteristics are listed in Table 1.

3. MEASUREMENT PROCEDURE

Figure 1 shows the equipment configuration for making the signal-to-interference ratio measurements. The audio analyzer was used to measure four of the localizer receiver outputs; i.e., localizer audio, course deviation voltage, flag voltage, and AGC voltage. These parameters were chosen as being potentially sensitive to interference. The audio analyzer has an audio generator whose output modulated the ILS signal generator. The audio analyzer monitored the receiver's audio output to determine percent audio distortion. The ILS signal generator was set to simulate a signal which would produce the standard deflection of 0.093 ddm or 90 microamperes of course current in the receiver.

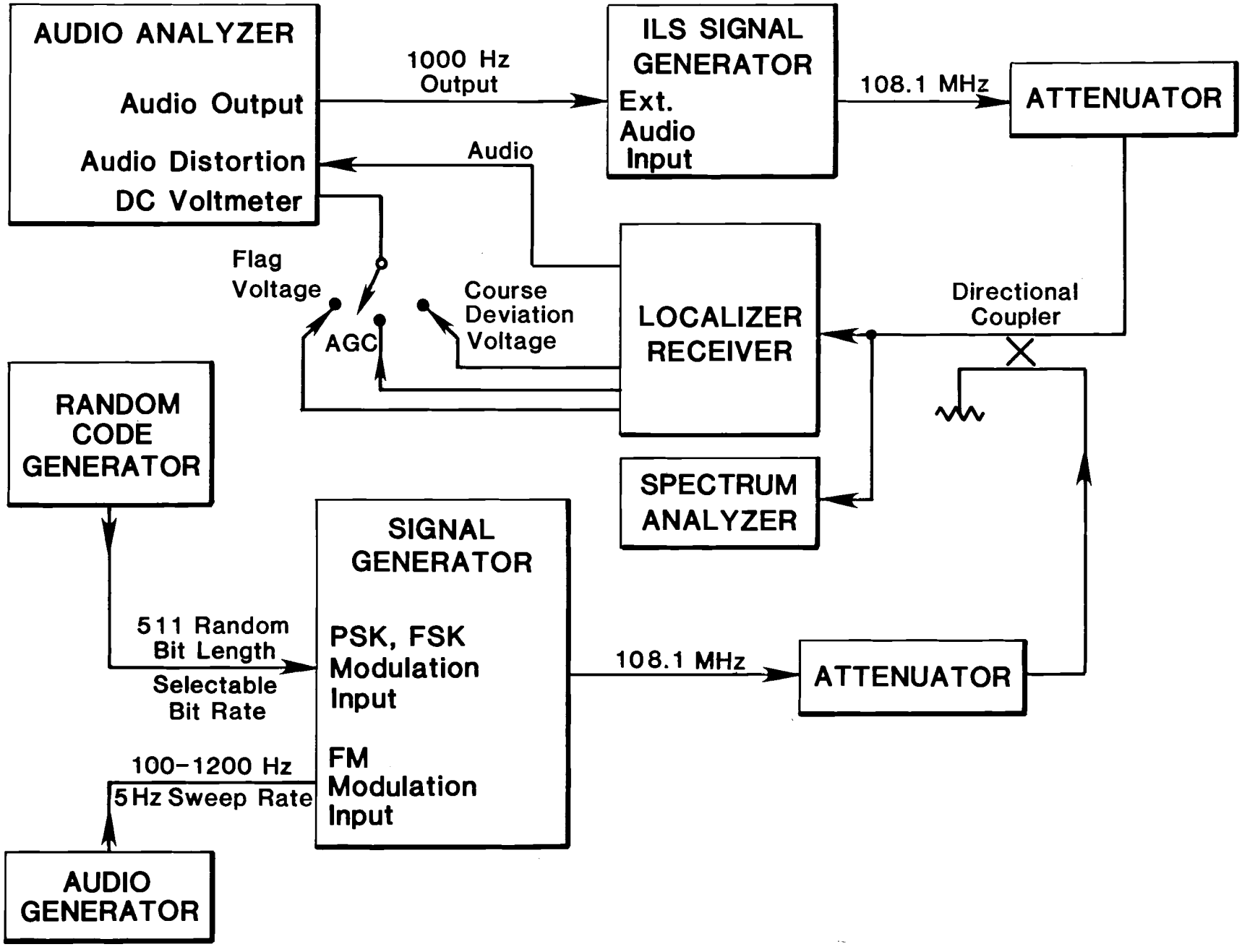

Figure 1. Signal-to-interference ratio measurement block diagram.

Table 1. Characteristics of Localizer Receivers

Type	Rcvr A General Aviation	Rcvr B General Aviation	Rcvr C Commercial Aviation	Rcvr D Commercial Aviation
Sensitivity				
Specification	-97 dBm[2]	-103 dBm[3]	-97 dBm[2]	-99 dBm[4]
Measured[1]	-97 dBm	-104 dBm	-103 dBm	-110 dBm
Selectivity				
6-dB passband				
Specification	≥36 kHz	≥38 kHz	≥40 kHz	≥12 kHz
Measured	38 kHz	36 kHz	56 kHz	33 kHz
60-dB passband				
Specification	≤72 kHz	≤100 kHz[5]	≤68 kHz	≤38 kHz
Measured	70 kHz	80 kHz	66 kHz	58 kHz

[1]Minimum signal which gives standard deflection and no appearance of a warning flag.

[2]Typical minimum signal level which gives 6 dB S+N/N ratio.

[3]Typical minimum signal level which gives one-half warning flag.

[4]Typical minimum signal level which gives no appearance of warning flags.

[5]75 dB passband.

Interference was introduced into the signal path via a directional coupler. The interference mode was chosen at the interference signal generator to be CW, FM, PSK, or FSK. Table 2 lists the parameters for the interference signals.

For each chosen level of desired ILS signal level, the interference signal level was increased until each of the four receiver parameters was driven beyond the error bounds listed in Table 3. These are somewhat arbitrary error bounds, but they were selected to demonstrate the localizer receiver's sensitivity to interference. Certainly course deviation errors of 15 μA or more and peeping or full flag indications are more serious to the pilot than changes in audio distortion and/or AGC.

Table 2. Interference Signal Parameters
CW carrier frequency = 108.1 MHz FM carrier frequency = 108.1 MHz frequency deviation = ±25 kHz modulation frequency = 100 - 1200 Hz sweep rate = 5 Hz FSK carrier frequency = 108.1 MHz mark-space frequency difference = 6800 Hz data rate = 9600 bits per second random bit code length = 511 bits PSK carrier frequency = 108.1 MHz mark-space phase difference = 180 deg (±90 deg) data rate = 2000 bits per second random bit code length = 511 bits

Table 3. Localizer Receiver Parameter Error Bounds

Parameter	Error Condition
Course deviation	Error bounds exceeded when course deviation is more than 15 μA change in course current from the standard deflection of 90μA
Flag indicator	Error bounds exceeded when 1) flag first appears (peeping flag) and 2) when full flag is present
Audio distortion	Error bounds exceeded when audio distortion percentage is increased by additional 1) one percent and 2) ten percent
AGC voltage	Error bounds exceeded when AGC voltage changes by 1) 0.1 dB and 2) 1.0 dB

The signal levels at which the measurements were made were selected because they represented standard signal levels, as shown in Table 4. In addition to the levels listed in Table 4, measurements were made at signal levels just greater than receiver sensitivity, defined as the minimum signal

Table 4. Measurement Signal Levels	
Desired Signal Level (dBm)	Input Signal Voltage Across 50-ohm Input (μV)
-27	10000
-47	1000
-73	50
-80	21.5 (75 μV/m field strength and loss less isotropic antenna system)

which indicates standard deflection with no warning flags present. The spectrum analyzer was used to measure the total power in the desired signal and interference signal by measuring their respective CW powers.

The following procedure was followed for each measurement:

1) Set the interference signal generator to 108.1 MHz and then apply the desired modulation with the specified characteristics as listed in Table 2.
2) Set the ILS signal generator to 108.1 MHz. Use the spectrum analyzer to measure the ILS signal level to the localizer receiver. Set the signal level to one of those specified in Table 4 or to the receiver's sensitivity by adjusting the ILS signal attenuator.
3) While monitoring the course deviation voltage, adjust the interference signal attenuator until the course deviation exceeds the limits specified in Table 3. Return the interference signal generator to the CW mode and record the interference signal level as indicated by the spectrum analyzer.
4) Repeat step 3 for the other monitored localizer outputs (i.e., flag voltage, audio distortion, and AGC voltage).
5) Repeat steps 2 through 4 for the other ILS signal levels.
6) Repeat steps 1 through 5 for the other modulation modes.
7) Repeat steps 1 through 6 for the other localizer receivers.

4. MEASUREMENT RESULTS

In Tables 5 through 20 we have listed the measured signal-to-interference ratios for the combinations of five input signal levels, four modes of interference, and four localizer receivers. The chosen error bounds on course deviation are more sensitive to interference than are the error bounds for warning flags. For all measurement combinations, a higher signal-to-interference ratio is required to keep the course deviation error less than 15 μA than to keep the full warning flag from appearing. For some conditions, the measured signal-to-interference ratio which causes the course deviation to be in error by 15 μA also causes a peeping warning flag. This is a valuable criterion since it begins to warn the pilot that the course indication may be in error.

The FAA has had discussions with manufacturers, who stated that audio distortion is a sensitive indicator of interference. Indeed these measurements show that a one percent increase in audio distortion does occur at signal-to-interference ratios that are higher than those which cause 15 μA course errors (see Table 8, for example). However, we do not believe the pilot will be able to detect a one-percent or even ten-percent change in distortion level.

The AGC voltage changes are a rather insensitive indicator of interference. In 40 per cent of the cases, the course error is greater than 15 μA, and the full warning flag has appeared before AGC indicates even a 0.1 dB change due to interference.

Tables 21 through 24 summarize the measured signal-to-interference ratios which result in course deviation errors of at least 15 μA. Co-channel CW appears to be the worst interference mode, followed by PSK, FSK, and finally FM modulation. From Table 21 we note that approximately 20-dB signal-to-interference ratios are required to ensure that the four receivers do not display course errors greater than 15 μA. Interestingly, Table 22 shows that, when the interference is PSK, roughly similar ratios are required to achieve similar performance. Tables 23 and 24 indicate that the receivers require smaller signal-to-interference ratios when the interference is FSK or FM than they require when the interference is CW or PSK.

Table 5. Performance of Localizer Receiver A In the Presence of Co-Channel CW Interference

Desired Input Signal Level (dBm)	Signal-to-Interference Ratios Which Cause Indicated Errors: Course Error 15 μA from 0.093 ddm (dB)	Flag Indicator: peeping flag (dB)	Flag Indicator: full flag (dB)	Audio distortion Change from 14% to 15% (dB)	Audio distortion Change from 14% to 24% (dB)	RF AGC Change of 0.1 db (dB)	RF AGC Change of 1 dB (dB)
-27	15	*	1	8	5	-1	-31
-47	16	*	1	11	5	-2	-33
-73	12	*	3	11	5	0	-31
-80	16	*	5	13	5	2	-28
Receiver Sensitivity	14	*	6	12	6	6	-18

* Due to circuit design, either full flag or no flag is present

Table 6. Performance of Localizer Receiver B In the Presence of Co-Channel CW Interference

Desired Input Signal Level (dBm)	Signal-to-Interference Ratios Which Cause Indicated Errors: Course Error 15 μA from 0.093 ddm (dB)	Flag Indicator: peeping flag (dB)	Flag Indicator: full flag (dB)	Audio distortion Change from 15% to 16% (dB)	Audio distortion Change from 15% to 25% (dB)	RF AGC Change of 0.1 db (dB)	RF AGC Change of 1 dB (dB)
-27	12	13	2	10	7	5	-14
-47	13	10	3	8	3	6	-10
-73	20	13	-1	13	8	7	-10
-80	13	12	0	13	4	3	-14
Receiver Sensitivity	22	10	2	13	8	8	-8

Table 7. Performance of Localizer Receiver C In the Presence of Co-Channel CW Interference

Desired Input Signal Level (dBm)	Signal-to-Interference Ratios Which Cause Indicated Errors: Course Error 15 μA from 0.093 ddm (dB)	Flag Indicator: peeping flag (dB)	Flag Indicator: full flag (dB)	Audio distortion Change from 10% to 11 % (dB)	Audio distortion Change from 10% to 20% (dB)	RF AGC Change of 0.1 db (dB)	RF AGC Change of 1 dB (dB)
-27	9	*	-1	11	4	3	-13
-47	8	*	-1	14	5	2	-27
-73	9	*	-2	12	4	2	-16
-80	9	*	0	13	5	2	-20
Receiver Sensitivity	--	*	--	--	--	--	--

*No data

Table 8. Performance of Localizer Receiver D In the Presence of Co-Channel CW Interference

Desired Input Signal Level (dBm)	Signal-to-Interference Ratios Which Cause Indicated Errors: Course Error 15μ A from 0.093 ddm (dB)	Flag Indicator: peeping flag (dB)	Flag Indicator: full flag (dB)	Audio distortion Change from 24% to 25% (dB)	Audio distortion Change from 24% to 34% (dB)	RF AGC Change of 0.1 db (dB)	RF AGC Change of 1 dB (dB)
-27	8	*	4	--	8	16	-4
-47	9	*	4	24	11	7	-4
-73	8	*	5	30	21	19	-10
-80	8	*	5	28	11	13	-4
Receiver Sensitivity	11	*	3	17	6	8	-2

*Due to circuit design, either full flag or no flag is present.

Table 9. Performance of Localizer Receiver A In the Presence of Co-Channel PSK Interference

Desired Input Signal Level (dBm)	Signal-to-Interference Ratios Which Cause Indicated Errors: Course Error 15 μA from 0.093 ddm (dB)	Flag Indicator peeping flag (dB)	Flag Indicator full flag (dB)	Audio distortion Change from 14% to 15% (dB)	Audio distortion Change from 14% to 24% (dB)	RF AGC Change of 0.1 db (dB)	RF AGC Change of 1 dB (dB)
-27	20	*	4	13	6	-1	-32
-47	19	*	4	14	6	-2	-37
-73	19	*	3	13	7	1	-31
-80	21	*	5	15	6	0	-30
Receiver Sensitivity	18	*	4	14	8	3	-20

*Due to circuit design, either full flag or no flag is present.

Interference Characteristics: Co-channel phase shift keying modulation
±90deg phase shift
2000 bits per second data rate
511 random bit code length

Table 10. Performance of Localizer Receiver B In the Presence of Co-Channel PSK Interference

Desired Input Signal Level (dBm)	Signal-to-Interference Ratios Which Cause Indicated Errors: Course Error 15 μA from 0.093 ddm (dB)	Flag Indicator peeping flag (dB)	Flag Indicator full flag (dB)	Audio distortion Change from 15% to 16% (dB)	Audio distortion Change from 15% to 25% (dB)	RF AGC Change of 0.1 db (dB)	RF AGC Change of 1 dB (dB)
-27	10	7	1	19	7	4	-13
-47	7	8	1	17	8	5	-12
-73	11	9	0	16	9	2	-10
-80	11	10	-1	20	9	2	-14
Receiver Sensitivity	11	11	-1	17	10	8	-8

Interference Characteristics: Co-channel phase shift keying modulation
±90 deg phase shift
2000 bits per second data rate
511 random bit code length

Table 11. Performance of Localizer Receiver C In the Presence of Co-Channel PSK Interference

Desired Input Signal Level (dBm)	Signal-to-Interference Ratios Which Cause Indicated Errors: Course Error 15 μA from 0.093 ddm (dB)	Flag Indicator peeping flag (dB)	Flag Indicator full flag (dB)	Audio distortion Change from 10% to 11% (dB)	Audio distortion Change from 10% to 20% (dB)	RF AGC Change of 0.1 db (dB)	RF AGC Change of 1 dB (dB)
-27	10	*	-6	21	18	1	-13
-47	8	*	-6	30	18	-1	-28
-73	11	*	-7	29	18	2	-18
-80	9	*	-7	27	17	0	-20
Receiver Sensitivity	--		-6	--	--	-11	-36

*No data

Interference Characteristics: Co-channel phase shift keying modulation
±90 deg phase shift
2000 bits per second data rate
511 random bit code length

Table 12. Performance of Localizer Receiver D In the Presence of Co-Channel PSK Interference

Desired Input Signal Level (dBm)	Signal-to-Interference Ratios Which Cause Indicated Errors: Course Error 15 μA from 0.093 ddm (dB)	Flag Indicator peeping flag (dB)	Flag Indicator full flag (dB)	Audio distortion Change from 24% to 25% (dB)	Audio distortion Change from 24% to 34% (dB)	RF AGC Change of 0.1 db (dB)	RF AGC Change of 1 dB (dB)
-27	7	*	5	20	12	8	-5
-47	9	*	6	22	11	10	-4
-73	9	*	2	22	12	20	11
-80	8	*	5	22	12	16	5
Receiver Sensitivity	9	*	8	24	13	14	1

*Due to circuit design, either full flag or no flag is present.

Interference Characteristics: Co-channel phase shift keying modulation
±90 deg phase shift
2000 bits per second data rate
511 random bit code length

Table 13. Performance of Localizer Receiver A In the Presence of Co-Channel FSK Interference

Desired Input Signal Level (dBm)	Signal-to-Interference Ratios Which Cause Indicated Errors: Course Error 15 μA from 0.093 ddm (dB)	Flag Indicator peeping flag (dB)	Flag Indicator full flag (dB)	Audio distortion Change from 14% to 15% (dB)	Audio distortion Change from 14% to 24% (dB)	RF AGC Change of 0.1 db (dB)	RF AGC Change of 1 dB (dB)
-27	13	*	6	17	9	-1	-32
-47	14	*	6	16	10	-1	-32
-73	14	*	7	18	10	1	-31
-80	14	*	8	18	10	1	-28
Receiver Sensitivity	13	*	7	20	11	3	-20

*Due to circuit design either full flag or no flag is present.

Interference Characteristics: Co-channel frequency shift keying modulation
6800 Hz frequency shift
9600 bits per second data rate
511 random bit code length

Table 14. Performance of Localizer Receiver B In the Presence of Co-Channel FSK Interference

Desired Input Signal Level (dBm)	Signal-to-Interference Ratios Which Cause Indicated Errors: Course Error 15 μA from 0.093 ddm (dB)	Flag Indicator peeping flag (dB)	Flag Indicator full flag (dB)	Audio distortion Change from 15% to 16% (dB)	Audio distortion Change from 15% to 25% (dB)	RF AGC Change of 0.1 db (dB)	RF AGC Change of 1 dB (dB)
-27	10	7	-2	12	4	3	-14
-47	13	9	-2	12	4	4	-12
-73	13	8	-1	13	5	3	-10
-80	11	7	-1	14	5	2	-9
Receiver Sensitivity	9	7	0	15	5	4	-10

Interference Characteristics: Co-channel frequency shift keying modulation
6800 Hz frequency shift
9600 bits per second data rate
511 random bit code length

Table 15. Performance of Localizer Receiver C In the Presence of Co-Channel FSK Interference

Desired Input Signal Level (dBm)	Signal-to-Interference Ratios Which Cause Indicated Errors: Course Error 15 μA from 0.093 ddm (dB)	Flag Indicator peeping flag (dB)	Flag Indicator full flag (dB)	Audio distortion Change from 10% to 11% (dB)	Audio distortion Change from 10% to 20% (dB)	RF AGC Change of 0.1 db (dB)	RF AGC Change of 1 dB (dB)
-27	5	*	-1	27	16	0	-13
-47	5	*	0	27	16	-2	-29
-73	7	*	1	28	17	0	-17
-80	4	*	-1	27	16	-1	-20
Receiver Sensitivity	5	*	0	20	14	-15	-37

*No data

Interference Characteristics: Co-channel frequency shift keying modulation
6800 Hz frequency shift
9600 bits per second data rate
511 random bit code length

Table 16. Performance of Localizer Receiver D In the Presence of Co-Channel FSK Interference

Desired Input Signal Level (dBm)	Signal-to-Interference Ratios Which Cause Indicated Errors: Course Error 15 μA from 0.093 ddm (dB)	Flag Indicator peeping flag (dB)	Flag Indicator full flag (dB)	Audio distortion Change from 24% to 25% (dB)	Audio distortion Change from 24% to 34% (dB)	RF AGC Change of 0.1 db (dB)	RF AGC Change of 1 dB (dB)
-27	6	*	6	17	8	5	-5
-47	5	*	6	16	8	9	-5
-73	7	*	5	17	8	22	10
-80	6	*	6	15	8	16	5
Receiver Sensitivity	6	*	8	17	8	7	-1

*Due to circuit design, either full flag or no flag is present.

Interference Characteristics: Co-channel frequency shift keying modulation
6800 Hz frequency shift
9600 bits per second data rate
511 random bit code length

Table 17. Performance of Localizer Receiver A In the Presence of Co-Channel FM Interference

Desired Input Signal Level (dBm)	Signal-to-Interference Ratios Which Cause Indicated Errors: Course Error 15 μA from 0.093 ddm (dB)	Flag Indicator: peeping flag (dB)	Flag Indicator: full flag (dB)	Audio distortion Change from 14% to 15% (dB)	Audio distortion Change from 14% to 24% (dB)	RF AGC Change of 0.1 db (dB)	RF AGC Change of 1 dB (dB)
-27	10	*	0	10	3	-4	-36
-47	12	*	0	12	5	-2	-37
-73	12	*	2	10	4	-1	-35
-80	12	*	2	12	4	0	-30
Receiver Sensitivity	12	*	3	14	4	2	-22

*Due to circuit design, either full flag or no flag is present

Interference Characteristics: Co-channel frequency modulation
±25 kHz deviation
100-1200 Hz broadband, swept
5 Hz sweep rate

Table 18. Performance of Localizer Receiver B In the Presence of Co-Channel FM Interference

Desired Input Signal Level (dBm)	Signal-to-Interference Ratios Which Cause Indicated Errors: Course Error 15 μA from 0.093 ddm (dB)	Flag Indicator: peeping flag (dB)	Flag Indicator: full flag (dB)	Audio distortion Change from 15% to 16% (dB)	Audio distortion Change from 15% to 25% (dB)	RF AGC Change of 0.1 db (dB)	RF AGC Change of 1 dB (dB)
-27	13	5	-5	11	5	0	-17
-47	10	6	-4	11	5	1	-17
-73	7	5	-3	11	2	0	-7
-80	11	6	-6	11	3	0	-26
Receiver Sensitivity	7	7	-6	17	4	3	-12

Interference Characteristics: Co-channel frequency modulation
±25 kHz deviation
100-1200 Hz broadband, swept
5 Hz sweep rate

Table 19. Performance of Localizer Receiver C In the Presence of Co-Channel FM Interference

Desired Input Signal Level (dBm)	Signal-to-Interference Ratios Which Cause Indicated Errors: Course Error 15 μA from 0.093 ddm (dB)	Flag Indicator peeping flag (dB)	Flag Indicator full flag (dB)	Audio distortion Change from 10% to 11% (dB)	Audio distortion Change from 10% to 20% (dB)	RF AGC Change of 0.1 db (dB)	RF AGC Change of 1 dB (dB)
-27	3	-4	0	19	9	-1	-16
-47	2	3	1	19	9	-4	-32
-73	3	-4	0	18	9	-2	-21
-80	1	-4	0	19	9	-3	-23
Receiver Sensitivity	3	-6	2	--	14	-20	-40

Interference Characteristics: Co-channel frequency modulation
±25 kHz deviation
100-1200 Hz broadband, swept
5 Hz sweep rate

Table 20. Performance of Localizer Receiver D In the Presence of Co-Channel FM Interference

Desired Input Signal Level (dBm)	Signal-to-Interference Ratios Which Cause Indicated Errors: Course Error 15 μA from 0.093 ddm (dB)	Flag Indicator peeping flag (dB)	Flag Indicator full flag (dB)	Audio distortion Change from 24% to 25% (dB)	Audio distortion Change from 24% to 34% (dB)	RF AGC Change of 0.1 db (dB)	RF AGC Change of 1 dB (dB)
-27	3	*	2	6	2	7	-7
-47	3	*	3	6	2	6	-7
-73	3	*	1	6	2	16	7
-80	3	*	2	6	1	14	2
Receiver Sensitivity	2	*	6	8	2	-2	-4

*Due to circuit design, either full flag or no flag is present.

Interference Characteristics: Co-channel frequency modulation
±25 kHz deviation
100-1200 Hz broadband, swept
5 Hz sweep rate

Table 21. Localizer Receiver Course Error Performance in the Presence of Co-Channel CW Interference

RF Signal Level (dBm)	Signal-to-interference ratios which cause 15 μA course error from standard deflection, 0.093 ddm			
	Rcvr A (dB)	Rcvr B (dB)	Rcvr C (dB)	Rcvr D (dB)
-27	15	12	9	8
-47	16	13	8	9
-73	12	20	9	8
-80	16	13	9	8
Receiver Sensitivity	14	22	--	11

Table 22. Localizer Receiver Course Error Performance in the Presence of Co-Channel PSK Interference

RF Signal Level (dBm)	Signal-to-interference ratios which cause 15 μA course error from standard deflection, 0.093 ddm			
	Rcvr A (dB)	Rcvr B (dB)	Rcvr C (dB)	Rcvr D (dB)
-27	20	10	10	7
-47	19	7	8	9
-73	19	11	11	9
-80	21	11	9	8
Receiver Sensitivity	18	11	----	9

Interference Characteristics: Co-channel PSK
±90 degrees phase shift
2 kHz data rate
511 random bit code length

Table 23. Localizer Receiver Course Error Performance in the Presence of Co-Channel FSK Interference

Signal-to-interference ratios which cause 15 μA course error from standard deflection, 0.093 ddm

Rf Signal Level (dBm)	Rcvr A (dB)	Rcvr B (dB)	Rcvr C (dB)	Rcvr D (dB)
-27	13	10	5	6
-47	14	13	5	5
-73	14	13	7	7
-80	14	11	4	6
Receiver Sensitivity	13	9	5	6

Interference Characteristics: Co-channel FSK
9600 bits per second data rate
6800 Hz frequency shift
511 random bit code length

Table 24. Localizer Receiver Course Error Performance in the Presence of Co-Channel FM Interference

Signal-to-interference ratios which cause 15 μA course error from standard deflection, 0.093 ddm

RF Signal Level (dBm)	Rcvr A (dB)	Rcvr B (dB)	Rcvr C (dB)	Rcvr D (dB)
-27	10	13	3	3
-47	12	10	2	3
-73	12	7	3	3
-80	12	11	1	3
Receiver Sensitivity	12	7	3	2

Interference Characteristics: FM co-channel
±25 kHz deviation
100-1200 Hz baseband, swept
5 Hz sweep rate

Chwedchuk et al. (1974) conducted measurements of interference effects on an ILS localizer receiver that included beat frequency measurements of 40 to 200 Hz. The CW source was swept in frequency such that its carrier was precisely 40 to 200 Hz frequency offset from the ILS signal's carrier frequency. The required signal-to-interference ratios which gave a 5 μA course error and a 15 μA course error for the 40 to 200 Hz beat frequencies were measured and plotted. The plots peak at frequency offsets of 90 and 150 Hz. The peaks are very sharp since a change of 10 Hz to either side of 90 or 150 Hz results in at least a 15 dB drop in required signal-to-interference ratio to maintain a constant 5 μA or 15 μA course error. We made similar measurements on Receiver C and held frequency offset to ±2 Hz of 90 and 150 Hz between the localizer carrier and the CW interference carrier. Table 25 compares our measurements with Chwedchuk's measurements. As with Chwedchuk's data, our measurements showed essentially no difference in required signal-to-interference ratios for interference precisely offset to 90 Hz or to 150 Hz. Our measurements demonstrated very sharp peaks at 90 and 150 Hz, as did Chwedchuk's measurements. However it was extremely difficult to maintain the precise 90 and 150 Hz offsets.

Table 25. Comparison of Measurement Results When CW Interference is 90 or 150 Hz ±2 Hz Frequency Offset From Localizer Signal's Carrier Frequency

	Signal-to-interference ratios which cause 5 and 15 μA course errors from standard deflection, 0.093 ddm	
Course Error (μA)	Rcvr C (dB)	Chwedchuk's Rcvr (dB)
5	42	43
15	32	38

For these measurements, we selected reasonable modulation parameters. If a particular interference system has different parameters than those listed in Table 2, then an estimate of performance can be made by scaling the measured data by the ratio the bandwidth of the measured system given in this report with the bandwidth of the new system. That is:

$$(S/I)_{\text{new system}} = (S/I)_{\text{measured system}} + BW_{\text{correction factor}}.$$

For example, if the new system uses FM modulation and has a frequency deviation of 100 kHz, the ratio of the bandwidths is 10 log (25 kHz/100 kHz) or -6 dB. Thus, from Table 24, receiver A would need a signal-to-interference ratio of:

$$(S/I)_{\text{new system at 100 KHz deviation}} = (S/I)_{\text{at 25 kHz}} + 10 \log(25\text{kHz}/100\text{ kHz})$$
$$= 10 \text{ dB} - 6 \text{ dB}$$
$$= 4 \text{ dB}$$

at -27 dBm desired signal level to maintain not more than 15 μA course deviation error.

5. CONCLUSIONS

Signal-to-interference measurements were made on two general aviation and two commercial aviation localizer receivers. The interference was co-channel with the desired localizer signal and was one of four modulation modes (CW, PSK, FSK, and FM). On each receiver, four parameters were monitored which were to show the receiver's sensitivity to interference. Four levels of desired input signal levels were tested.

The set of measurements suggest the following conclusions:

1) A 15 μA course error limit requires a greater signal-to-interference ratio than does a full warning flag, a ten-percent change in audio distortion or 1.0 dB change in AGC voltage.
2) The required signal-to-interference ratio to maintain less than 15 μA course error is nearly constant for each receiver as the desired input signal level is changed from receiver sensitivity to -27 dBm (10000 μV across 50 ohms).
3) The localizer receivers were most sensitive to CW interference, closely followed by PSK, FSK, and FM modulation interference.
4) The localizer receivers require about 20-dB signal-to-interference ratios to maintain less than 15 μA course deviation errors, when the interference does not cause 90 or 150-Hz heterodynes.
5) At precise frequency offsets of 90 and 150 Hz ±2 Hz, Receiver C required 32 dB signal-to-interference ratio to maintain less than 15 μA course error and 42 dB to maintain less than 5 μA course error. However, precise frequency offsets of 90 and 150 Hz between interference sources and ILS localizer transmitters have a very low probability in environments outside of the laboratory.

6. REFERENCES

Chwedchuk, L., R. Poirier, and L. Walker (1974)
A Study of Potential RF Interference to Aeronautical Radio Navigational Aids.
Technical Report BTRB-5, April 1974
Communications Canada, Telecommunication Regulatory Service

APPENDIX A. LIST OF SYMBOLS

AGC	automatic gain control
CW	continuous wave
dB	decibels, 10 log (dimensionless ratio of powers)
dBm	power in decibels greater than 1 milliwatt
ddm	difference in depth of modulation
deg	degrees
FAA	Federal Aviation Administration
FM	frequency modulation
FSK	frequency shift keying
Hz	frequency units, cycles per second
I	interference
ILS	instrument landing system
ITS	Institute for Telecommunication Sciences
kHz	kilohertz (10^3 Hz)
MHz	megahertz (10^6 Hz)
N	noise
PSK	phase shift keying
RF	radio frequency
S	signal
μA	microamp (10^{-6} amp)
μV	microvolt (10^{-6} volt)

APPENDIX B. INTERFERENCE EFFECTS ON ILS AND MLS: AN ANNOTATED BIBLIOGRAPH

This bibliograph cites those articles on the performance of instrument landing systems (ILS) operating in interference. The reports were written primarily by or for U. S. Government agencies. Several reports were written by foreign authors. A second section lists articles that discuss microwave landing systems (MLS) operating in interference.

Although each list is by no means complete, each article has references which the reader can pursue for additional information.

The bibliograph is annotated in the sense that the author of most reports has provided an abstract which is given with each report citation.

ILS-INSTRUMENT LANDING SYSTEM

Army Test and Evaluation Command, Aberdeen Proving Ground, MD, Compatibility, Related Equipment, Report No. TOP-7-3-509, 1978, 22 pages.
This report establishes procedures to conduct a compatibility test of aviation material during development testing to assure that the items being tested meet the compatibility requirements of the Army environment and the explicit compatibility parameters stated in the requirements documentation. Areas of compatibility include physical, technical and operational characteristics, installation/removal, armament, avionics, personnel, materiel and maintenance. Check lists and data collection forms are also included.

Ashby, W. O., Evaluation of Existing VOR, Localizer, and Glideslope Receiving Equipment: In 50-kHz/150-kHz Environment, Individual Test Results, volume 1, Collins Radio Co., Cedar Rapids, Iowa, Available NTIS.
Each receiver was tested under various conditions of interference in a simulated environment with an interfering adjacent channel signal (50 kHz VOR and Localizer; 150 kHz Glideslope). Some 61 types of receivers, representing all user groups, were tested to provide data on which to base geographic facility separations. Test procedure are criteria which are described and the basis for the selection of the receiver types is tested. Receiver test data for various interference situations are tabulated.

Ashby, W. O., Evaluation of Existing VOR, Localizer, and Glideslope Receiving Equipment, volume 2, book 1, Collins Radio Co., Cedar Rapids, Iowa, Available NTIS.
An evaluation of VHF omnirange navigation, localizer, and glideslope receiving equipment were evaluated under various conditions of interference in a simulated environment. Approximately 61 types of receivers were tested, representing all user groups. The objective of the test was to provide data on which to base geographic facility separations. The test plan and basic test results for each individual test are presented.

Ashby, W. O., Evaluation of Existing VOR, Localizer and Glideslope Receiving Equipment, volume 2, book 2, Collins Radio Co., Cedar Rapids, Iowa, Available NTIS.
Tests of VHF Omnirange navigation system, localizer, and glideslope receiving equipment were conducted to determine performance under various conditions of radio frequency interference. The basic test results for each of the sixty-one receivers tested are presented. The purpose of the test was to provide data on which to base geographic facility separations to avoid mutual electromagnetic interference.

Bass, S. C., Application of Balanced Lines, Tone Signaling, and Microprocessor Control Techniques to a Category 3 Instrument Landing System, Purdue University, Lafayette, Ind., Available NTIS.
The purpose of this partial system design and installation was to evaluate the electromagnetic interference susceptibility and reliability of a microprocessor controlled CAT III ILS monitor and control interface technique using balanced lines and tone signaling techniques. Implementation and evaluation of these techniques as applied to a partial

system is discussed. A full system test is planned under a follow-on program. Details of the results and plans for the full system are contained in the report.

Bass, S. C., S. E. Belter, C.-L. Chen, T. Findakly, and H.-K. Howard, Application of Balanced Lines, Tone Signaling, and Microprocessor Control Techniques to a Category III Instrument Landing System, Interim Rept. 31 Dec 74- 31 Oct 75.
The purpose of this partial system design and installation was to evaluate the electromagnetic interference susceptibility and reliability of a microprocessor controlled CAT III ILS monitor and control interface technique using balanced lines and tone signaling techniques. This report covers phase II; implementation and evaluation of these techniques at NAFEC as applied to a partial system. A full system test is planned under a follow-on program. Details of the results and plans for the full system are contained in the report.

Bass, S. C., S. E. Belter, C.-L. Chen, T. Findakly and H. H. Hwang, Application of Balanced Lines, Tone Signaling, and Microprocessor Control Techniques to a Category III Instrument Landing System, Purdue Research Foundation, Lafayette, Ind., 1976, 114 pages.
The purpose of this partial system design and installation was to evaluate the electromagnetic interference susceptibility and reliability of a microprocessor controlled CAT III ILS monitor and control interface technique using balanced lines and tone signaling techniques. This report covers phase II; Implementation and evaluation of these techniques at NAFEC as applied to a partial system. A full system test is planned under a follow-on program. Details of the results and plans for the full system are contained in the report.

Bass, S. C., S. E. Belter, C. L. Chen, T. Findakly and C. Greenblatt, Reliable Line Signaling Techniques for the FAA GRN-27(V) and CAT-III ILS, Purdue University, Lafayette, Ind., School of Electrical Engineering, Federal Aviation Administration, Washington, D. C., Systems Research and Development Service, 292000, 1975, 82 pages.
The purpose of these investigations is to reduce the effect of power line transients and lightning interference on solid state equipment. Specifically, this effort is directed toward protection of the GRN 27(V) and the FAA Mark III type instrument landing systems. This report covers phase 1 of the problem. An overview of the problem and its solution is provided followed by the detailed analytical, experimental and design work that supports proposed system changes. The heart of these recommended system changes consists of changing the method of signaling from unblanced, non-isolated to a balanced, isolated configuration with tone signaling. The recommendations are to be implemented and tested at NAFEC during phase II of the contract.

Belter, S. E., Williams, C. R. and Bass, S. C., Microprocessor-Controlled Communications In An Advanced Instrument Landing System, IEEE Transactions on Aerospace and Electronic Systems, Vol. 12, No. 6, p.698-705, 1976.

Benjamin, J., The Application of Correlation Techniques to Ground Based Aids in the Terminal Area, Royal Aircraft Establishment Farnborough (England), Technical memo, Report No. RAE-TR-Rad-868, Dec. 1968, 25 p.

This paper was presented to the 16th Avionics Panel Symposium of AGARD, on 'Problems of the Cockpit Environment'. The theme of the paper is concerned principally with the future of ILS and emphasis that radio inputs to the cockpit affect the environment and should be improved to provide higher reliability and integrity of operation.

Benjamin, J., Determination of CPILS Localizer Beam Noise, Royal Aircraft Establishment, Farnborough, England, Available NTIS.

Bishop, W. B., A Brief Study of the Effect of Sidelobe Interrogations on Interrogation-Path Reliability, Report No. RRE-Memo-2748, Apply to British Ministry of Technology via the appropriate channel, 1972, 29 pages.

Bleeg, R. J., H. F. Tisdale and R. M. Vircks, Inertially Augmented Automatic Landing System: Autopilot Performance with Imperfect ILS Beams, Boeing Co., Seattle, Washington, 059600, 1972, 242 pages.
The report considers the capability of three autopilots, with varying dependency or inertial navigation inputs, to perform the automatic landing task in the presence of ILS beam anomalies. Three sets of pitch and roll axis control laws for a commercial jet transport were analyzed and flight tested to determine their comparative advantages and limitations. Conventional autopilots with only minor or no reliance on inertial inputs are sensitive to ILS beam imperfections. It is shown that complementary filtering of ILS position information with INS-derived acceleration and velocity results in a very marked attenuation of airplane response to beam bends, noise, and overflight interference. A set of equations is derived by which the acceptability of system performance during an automatic approach can be assessed. The capability of the three autopilots to provide acceptance on category 1 and 2 ILS beams is investigated.

Burberry, R. A., Radio Components of Aircraft Approach Guidance System, Conference papers of the United Kingdom Symposium on Electronics for Civil Aviation. Electronics in Airborne Navigation and Communication Systems. 2. London, England. London, England. 222. 11 pp. Electronic Engng. Assoc. Electronic Engng Assoc. Min. Technology. 15-19 Sept. 1969.
The accuracy of the received information is affected by the amount and nature of interference superimposed upon the transmitted data. In speech communication there is a high degree of redundancy so that the operator may be able to interpret correctly messages accompanied by interference, thanks to the filtering ability of the human brain. When the intefering signals are within the carrier frequency bandwidth of the receiving system the equipment itself will in general be unable to distinguish between true and false information. In this paper consideration is given to ILS localizer, glidepath and marker systems and to radio altimeters.

Carmack, D. L., Dulles Category IIIA ILS Evaluation, Instrument Flight Center, Randolph AFB, Texas, 407583, 1972, 19 pages.
The category IIIA ILS guidance system is designed to provide a VHF/UHF localizer and glide slope with increased performance and a backup capability. The overall flyability of the systems must be superior to a Category I or II system due to the lower minimums (700 feet rvr) authorized for the approach. Since the radiated signal is in the UHF/VHF frequency band, it is subject to the same errors and limitations caused by ground or airborne vehicles. The success, then, of a Category IIIA

approach depends on the control of interference factors and capability of the aircraft and pilot to maintain the localizer and glide path.

Chin, G., L. Jordan, D. Kahn, and S. Morin, Calculated and Scale Model Experimentally Measured Scattering from Metallic Structures in Instrument Landing System, Transportation Systems Center Cambridge Mass, Interim Rept. No. TSC-FAA-73-28, Jan-Jun 73, Mar. 1974, 31 p.
Comparison is made of theoretically calculated and experimentally determined scattering from metallic tilted rectangles and vertical cylindrical scatterers. The scattering was experimentally measured in a scale model range at the Watertown Arsenal, Watertown, MA. The theoretically calculated scattering effects were obtained from the Transportation Systems Center, (TSC), physical optics model for ILS scattering. Reasonably good agreement was found between theoretically calculated and experimentally measured received power patterns.

Chin, G., L. Jordan, D. Kahn and S. Morin, Instrument Landing System Performance Prediction, Report No. TSC-FAA-73-21, Transportation Systems Center, Cambridge, Mass., 1974, 124 pages.
Further achievements made in fiscal year 1973 on the development of an Instrument Landing System (ILS) performance prediction model are reported. These include ILS localizer scattering from generalized slanted rectangular, triangular and cylindrical surfaces, a model of a parabolic localizer antenna system and an ILS glide slope terrain scattering theory. In addition, applications of this ILS performance prediction model are presented.

Chin, G., L. Jordan, D. Kahn, and S. Morin, Instrument Landing System Performance Prediction, Microwaves in service to man: International Microwave Symposium, Palo Alto, Calif., May 12-14, 1975, Digest of Technical Papers, (A75-36461 17-33) New York, Institute of Electrical and Electronics Engineers, Inc., 1975, p. 346-348.
An electromagnetic scattering model has been developed for predicting Instrument Landing System (ILS) localizer and glide slope performance. The model is used to predict course structure degradation resulting from a change in the airport environment. Such changes include the additions of new hangars, terminal buildings and control towers as well as terrain modifications. In addition, the model is used to predict comparative ILS antenna array performance in order to help determine which ILS system is required for new runway instrumentation and for the upgrading of existing instrumented runways to a higher FAA category.

Corcoran, J. L. K. and J. R. Guyther, Flight Test and Evaluation of the AN/ARA-63 in the A-4F Airplane, Report No. NATC-FT-52R-73, Requests for this document must be referred to Commander, Naval Air Test Center, Patuxent River, MD, 20670.
The AN/ARA-63 ILS receiver/decoder in the A-4F airplane was flight tested to determine its suitability for service use in conjunction with the shipboard AN/SPN-41 or the shorebased AN/TRN-28 ground-station. In-flight checks of the cockpit presentation, coverage limits, EMI tests, and carrier suitability tests of the equipment were made. The AN/ARA-63 installation is operationally and structurally satisfactory for use as an instrument landing system. The cockpit ILS controls and displays, the coverage limits, range capability, sensitivity and EMI test results were

satisfactory. Certain installation deficiencies exist and inflight EMI checks of the AN/ALQ-100, AN/APR-25 and AN/APR-27 are recommended.

Cornelious, E. L., Predictions of Interference-Reflection Zones for Scanning Beam Instrument Landing Systems, Report No. ECOM-4188, Army Electronics Command, Fort Monmouth, N.J., 1974, 55 pages.
To predict reflection/interference zones for scanning beam Instrument Landing Systems, representative situations for an airport environment were selected in developing multipath models. Interfering signals reflected from a large building near a runway will usually be confined to well-defined specular regions. The interfering reflecting signal magnitude in these regions can be large. The report presents these regions of interfering reflections in graphic form for various reflecting surface orientations and lateral distances between the radiating source and the reflecting surface.

Corona, P. and E. Paolini, Experimental Procedure to Determine Limits of ISM Interference Affecting Navigational ILS Equipment - Industrial, Scientific and Medical, Electromagnetic Compatibility 1979; Proceedings of the Third Symposium and Technical Exhibition, Rotterdam, Netherlands, May 1-3, 1979 (A80-27753 10-32) Zurich, Eidenoessische Technische HochschuleZuerich, 1979, p. 141-146.
A method for determining acceptable ISM (industrial, scientific, medical) interference field limits for instrument landing systems is described. The method involves the definition of the useful field of the ILS localizer and the measurement of the receiving patterns of the localizer antennas. A laboratory evaluation of the limits for interference voltage is presented.

Form, P., R. Springer and U. Stoldt, Measurements of the Influence of Static and Dynamic Interference on an ILS-Receiver and Measurement of the Capture Effect with the Double Frequency Procedure, Technische Universitaet, Brunswick, Available NTIS.
Static and dynamic interference of an onboard instrument landing system were investigated. The static interference tests show that the phase difference between effective and disturbance signal is the most important factor. Dynamic interference, caused by Doppler shift resulting from the moving aircraft, leads to an interchange of side bands and therefore of the information content. Measurement of the capture effect of the double frequency procedure showed that the disturbed signal can probably be suppressed to a large extent. In German.

Forssell, B. New (Aircraft) Landing System Gives Greater Safety and Higher Capacity, Elektro (Norway), Vol. 86, No. 13, 13-14, 16-17. 4.
On account of increasing air traffic it is becoming obvious that existing landing systems are inadequate. Instrument landing systems (ILS) are divided by the International Civil Aviation Organisation into three categories: (I) information down to 60 M; (II) down to 15 M; (III) down to the run-way. Most Norwegian airports are today provided with ILS Category I. The ILS system is criticised; it gives only one route to touch-down and the frequencies used (110 MHz and 330 MHz) are susceptible to interference. Many of the large electronic concerns are working on the development of new landing systems able to cope with future requirements for many years. The new scanning-beam, doppler and phase-front systems are described.

Fricke, H., The Limits of Today's Instrument Landing Procedure, Nachrichtentechnische Zeitschrift, Vol. 26, Aug. 1973, p. 397-400.
The basic concept involved in instrument landing was already described by Kramar (1933, 1935). The determination of the glide path and the course for landing is discussed, together with disturbances due to interferences because of multipath progagation and disturbances produced by ground effects. Certain limitations of the instrument landing system (ILS) are connected with the use of frequencies in the vicinity of 100 MHz and 300 MHz. New instrument landing methods which are to replace ILS sometime around 1985 will be operating at higher frequencies. Frequency ranges at 5 GHz or 15 GHz are being considered. In German.

Fricke, H., Possibilities of Improving Conventional Instrument Landing System (ILS), Washington, NASA, Translated into English from the DGLR-DGON Symposium on New Approach and Landing Techniques (Dusseldorf), 2-4 May, 1973, DGLR-Paper-73-017, 16 pages.
The possibility of improving conventional instrument landing systems by suppressing interference from reflected radiation is discussed. The two methods considered are the analysis of interference by additional amplitude and frequency modulation, and the exclusion of interference by quotient formation or circular polarization.

Fries, J. R., Improvement of Automatic Landing Through the Use of a Space Diversity ILS Receiving System, IEEE Trans. Aerosp. and Electron. System. (USA), Vol AES-7, No. 1, 47-53.
A space diversity method of receiving and processing ILS localizer information has been developed and flight tested. Multiple laterally separated antennas are used which sense the ILS signal on and around the approach path. Combining these signals suppresses ILS beam distortion produced by multipath signal interference and provides much improved guidance information to the landing aircraft control system.

Georgia Institute of Technology, FAA/Georgia Institute of Technology Grounding Workshop and Lightning Protection Seminar, Available NTIS.
A workshop was conducted on the field of grounding as related to EMI/EMS and lightning. Topics discussed include cable selection and installation practices, problems in single-point grounding, measuring ground resistance, grounding system design for large electronic installations, lightning induced transients on shield buried cables, grounding conductors, basic grounding principles, lightning protection requirements for status and control lines of the Mark III instrument landing system, and an effective protection system against lightning surges in ground-to-air communication facilities.

Gerlach, O. H. and J. Schuring, Mathematical Model of External Disturbances Acting on an Aircraft during an ILS Approach and Landing, Technische Hogeschool, Delft (Netherlands), Available NTIS.

Gierhart, G. D. and M. E. Johnson, Interference Predictions for VHF/UHF Air Navigation Aids (Companion Report to IER 26-ITSA 26), 1969, 64 pages.
Desired-to-undesired signal ratio predictions for the VHF omnirange (VOR) and instrument landing system (ILS) air navigation aids are presented. The parameters involved in these systems are given first. Propagation

mechanisms applicable to VHF/UHF and the calculation of transmission loss and its variability are then discussed, and third, the statistical nature of the desired-to-undesired signal ratio predictions is explained. The results of the study, presented in graphical form, supplement those given by the authors in an earlier ESSA Technical Report on the same subject. In addition to extending the range of variables previously considered, this report considers the glide slope portion of the ILS.

Gierhart, G. D. and M. E. Johnson, Interference Predictions for VHF/UHF Air Navigation Aids (Supplement to IER-26-ITSA 26 and ERL 138-ITS 95), Technical Memo, Jan. 1971, 65 p.
The report supplements information previously developed on interference predictions for VHF/UHF air navigation aids. Included are (a) radiation patterns needed to adapt curves previously developed for the Instrument Landing System (ILS) Localizer and Tactical Air Navigation (TACAN) to new equipment types, (b) comparisons of the propagation models used for predictions made from 1962 to the present, (c) propagation information in a different form, i.e. attenuation greater than free space for Distance Measuring Equipment (DME), TACAN and VHF Omnirange (VOR), (d) DME, for equipment configurations not previously considered, and (e) an errata list for earlier ESSA Technical Reports.

Gierhart, G. D. and M. E. Johnson, Propagation Model (0.1 to 20 GHz) Extensions for 1977 Computer Programs, Institute for Telecommunication Sciences, Boulder, CO, 1978, 91 pages.
This report describes methods used in the 1977 extensions of the propagation model incorporated into computer programs for propagation and interference analysis (0.1 to 20 GHz). These extensions to the 1973 Model allow the programs to be used for a wider variety of problems such as those involving air/air or air/satellite propagation. Method descriptions are confined to mathematical formulations for modifications to the 1973 Model, and do not include program listings or flow charts. A detailed description of the 1973 Model, including program listings, is provided in DOT Report FAA-RD-73-103. Capabilities of the 1977 computer programs are mentioned, but not discussed in detail. These capabilities are covered in DOT Report FAA-RD-73-60, which is an APPLICATIONS GUIDE for the programs.

Godfrey, J. T., H. F. Hartley, R. A. Moore, G. J. Moussally, Half-plane Scattering Applied to ILS Grading Criteria, IEEE Transactions on Aerospace and Electronic Systems, Vol. AES-13, Jan. 1977, p. 2-9, U.S. Department of Transportation.
A technique for calculating the derogation in the difference in depth of modulation (DDM) signal, used for aircraft glide slope guidance, due to slightly rough ground surfaces is developed. The contributions to the scattered signal from diffuse and specular scatter are treated separately. The diffuse derogation is calculated based on empirical data, and an average variation is presented. The specular contributions to the variation in the signal is calculated based on expanding the half-plane diffraction solution in terms of the ground roughness. A specular scattered deviation about the mean signal is then obtained by statistically averaging over normally distributed ground heights. Results of the analysis indicate that substantial relaxation in grading criteria can be effected.

Godfrey, J. T., H. F. Hartley, R. A. Moore and G. J. Moussally, Study of Rough Ground and Grading Criteria for Instrument Landing System Glide Slope Site Preparation, Westinghouse Defense and Electronic Systems Center, Baltimore, MD, Aerospace and Electronic Systems Division, 1978, 69 pages.
The scattering of electromagnetic radiation from rough surfaces has been studied. The diffuse and specular components of the scattered field are treated separately. Current grading of ILS sites requires rather stringent preparation of the ground. The application of this report is to develop grading criteria that reflect the statistical nature of the disturbance in observed signal rather than simply to consider the maximum allowable phase differences as the basis for establishing grading criteria.

Godfrey, J. T., H. F. Hartley, G. J. Moussally, and R. A. Moore, Terrain Modeling Using Half-Plane Geometry with Applications to ILS Glide Slope Antennas, IEEE Transactions on Antennas and Propagation, Vol. 24, No. 3, p. 370-378, 1976.

Gorman, J. T., and R. W. Redlich, Disturbance of ILS Localizer Signals by Reflections from Large Hangars, IEEE Transactions on Aerospace and Electronic Systems, vol. EAS-5, pp. 1001-1002.

Graziani, D., Mechanical Modulators for ILS, Electrical Comunication, Vol. 50, No. 4, p. 309-311, 1975.

Hahkio, T., Supression of ILS and VOR Course Scalloping by Means of Hilbert Transform, Sahko (Finland), Vol 43, No. 7-8, 191-7.
In the case of radial flight to or from the radio beacon the doppler effect shifts the frequency of the direct incoming signal more than that of any reflected signal. Thus the reflected signals act as components of a single sideband spectrum, causing an SSB-like interference modulation to the desired signal, disturbing it. This paper discusses the possibilitiy of suppressing the disturbances of the ILS and VOR course lines by means of the single sided property of the reflection interference. A method of suppressing the course scalloping in the receiver is suggested.

Harr, T. Jr., E. Haakinson and S. Murahata, Electromagnetic Compatibility of Simulated CATV Signals and Aircraft Navigation Receivers, Office of Telecommunications, Boulder, CO, Available NTIS.

Harrison, R. G., Mathematical Investigation of Non-Stationary RF Interference at the Output of an ILS Localizer Radio Receiver, Southampton University, England, Available NTIS.
Mathematical models of the time history of R. F. interference at the output of an ILS localizer radio receiver are derived. The analysis was motivated by the requirements for suitable mathematical models of R. F. interference for computer simulation studies. Where experimental results have been obtained, good agreement between theoretical and experimental data exist.

Hirashima, Y. and Kobayashi, T., ILS Course Improvement, NEC Research & Development, Vol. 1976, No. 40, p. 44-51, 1976.

Hoefgen, G., Improvement of Standard ILS while Retaining Compatibility, Standard Elektrik Lorenz A. G., Stuttgart, Available NTIS.
Two methods of improving the standard instrument landing system, while retaining compatibility, are presented. The compatible instrument landing system (CILS) consists of the following components: (1) standard ILS for clearance, and (2) microwave ILS 5 GHz, based on conventional principle (90/150 Hz) only for approach sector. To be compatible with the existing two carrier system with 9 kHz difference carrier frequency, the microwave oscillator frequency is also radiated. The precision instrument landing system (PILS) necessitates more onboard equipment and includes linear antenna arrays, consisting of elements sequentially radiating signals. An advantage over standard ILS is that the glide angle can be selected at random onboard. In German.

Hoefgen, G., The Technical Potential of Instrument Landing Systems in the Present and in the Future, Deutsche Gesellschaft fuer Luft- und Raumfahret, Jahrestagung, 10th, Berlin, West Germany, Sept. 13-15, 1977, 19 p.
The basic principles of instrument landing systems (ILS) are described with reference to the usual frequencies of the ground-based guiding transmitter, and the angle of approach around the mid-line of the runway. The accuracy and dependability of ILS is discussed in terms of the stability and consistancy of both on-board and ground transmitting equipment. Attention is given to the present state-of-the-art in ILS, and to suggestions for improvement, e.g. the use of two independent frequencies to reduce interference, and DME to improve distance measurement. The use of a micro-wave landing system (MLS) is also discussed, but in general, ILS is considered sufficient for the present and short-term future. In German.

Howard, G. S., TRACALS Evaluation Report. VOR and ILS Station Evaluation Report, Kadena Ab, Japan, Facility Checking Squadron (1866th) (AFCS) Richards-Gebaur AFB MO, 408827, 1976, 185 pages.
This report contains results of the AN/MRN-7/8 ILS and AN/FRN-26 VOR station evaluation conducted at Kadena AB, Japan, during the period 4-16 March 1976. Results of the concurrent evaluation of the ATC communications system appear in a separate report. All NAVAID equipment maintenance was found to be fully satisfactory. Minor maintenance actions which were necessary to optimize the equipment are described, including modulation and power adjustments on all facilities. Results of relocating the localizer clearance array are included. VOR flight evaluation initially revealed instances of out of tolerance structure, and actions taken to improve the structure are detailed. Also described are actions taken to reposition localizer and glide slope field detectors, and results of adjustment of offset phasing on the glide slope. Analysis of a localizer mutual frequency interference problem is included, as is a detailed analysis of all flight evaluation results. Taken together, the ground and the flight evaluation results fully define the capabilities and limitations of the 23R ILS and the VOR. The data presented in this report can be used as a valid guide to anticipated performance for both facilities until there is a significant change in equipment configuration or in the horizontal screening.

Huenemann, R. G., VOR and ILS, IEEE Spectrum, Vol. 16, No. 4, p. 11-12, 1979.

Hughts, N. H., The Use of Inertial Information to Improve Automatic ILS Approach Performance, Hybrid Navigation Systems; papers presented at the Guidance and Control Panel 9th Meeting, Delft, Netherlands, Neuilly-Sur-Seine, France, VI & 267, 12 pp. Agard. Nato Agard. 22-26 Sept 1969.
In this paper, the kinds of noise and interference which can occur on the ILS localizer signal, received in an aircraft approaching to land, are reviewed. The problems of designing an approach coupler which is insensitive to localizer noise and interference are described. Criteria for an acceptable design of coupler are defined and it is shown that these criteria can be met if information from a high quality inertial navigation system is used to complement the ILS localizer deviation signal. Results are shown of flight evaluation of an ILS-inertial system with and without interference on the localizer signal. The possibilities of improving the system design through the use of optimum filtering techniques are briefly discussed.

Johnson, M. E. and G. D. Gierhart, Applications Guide for Propagation and Interference Analysis Computer Programs (0.1 to 20 GHz), Office of Telecommunications, Boulder, Colorado, Institute for Telecommunication Sciences, 1978, 183 pages.
This report covers ten computer programs useful in estimating the service coverage of radio systems operating in the frequency band from 0.1 to 20 GHz. These programs may be used to obtain a wide variety of computer-generated microfilm plots such as transmission loss versus path length and the desired-to-undesired signal ratio at a receiving location versus the distance separating the desired and undesired transmitting facilities. Emphasis is placed on the types of outputs available and the input parameter requirements. The propagation model used with these programs is applicable to air/ground, air/air, ground/satellite and air/satellite paths. It can also be used for ground-to-ground paths that are line-of-sight or smooth earth. Detailed information on the propagation models and software involved is not provided. The normal use made of these programs involves a Department of Commerce (DOC) response to a Federal Aviation Administration (FAA) ARD-60 request for computer output and reimbursement to the DOC by the FAA for the associated costs.

Johnson, M. E. and G. D. Gierhart, Comparison of Measured Data with IF-77 Propagation Model Predictions, Institute for Telecommunication Sciences, Boulder, CO, Available NTIS.
Measured propagation data were compared with predictions made by the IF-77 (ITS-FAA-77) and other propagation models. Although IF-77 was developed for aeronautical applications, it can be used for some point-to-point propagation paths, and the measured data selected for comparison include point-to-point as well as aeronautical paths. Approximately 870,000 hours of data are associated with the 242 paths used. Predictions made with IF-77 were always best or second best and were substantially better than those made for free space conditions. The IF-77 model has a wide range of application and provides predictions compatible with the more specialized models tested. The aeronautical propagation data pool from which the data were selected is an appendix.

Jordan, L., D. Kahn, S. Lam, S. Morin and D. Newsom, ILS Localizer Performance Prediction of an Alford 1B Array Near a Limited Access Road at the New

Orleans Airport, Report No. TSC-FAA-73-15, Requests for this document must be referred to Administrator, Attn: Dir., Systems Research and Development Service, Washington, D. C., 20591.
The Transportation Systems Center (TSC) ILS Localizer Performance Prediction Model was used to predict the derogation to an Alford 1B Localizer caused by vehicular traffic traveling on a roadway to be located in front of the localizer. Several different types of car distributions were modeled and found to produce negligible additional derogation to the Alford 1B Localizer performance operating for Runway 10 at the New Orleans airport. However, because of the nature of the scattering causing the derogation and the capabilities of the TSC model, it is suggested that additional validation of the TSC results be obtained.

Jordan, L., D. Kahn, S. Morin and R. Silva, Instrument Landing System (ILS) Localizer Performance Study for Dallas/Fort Worth Airport, Part 2, Transportation Systems Center, Cambridge, Mass., 407082, 1974, 16 pages.
The Transportation Systems Center electromagnetic scattering model was used to predict the course deviation indication (CDI) at the Dallas/Fort Worth airport in the presence of several derogating structures in the report FAA-RD-72-96 'ILS Localizer Performance Study Part 1 Dallas/Fort Worth Regional Airport and Model Validation-Syracuse Hancock Airport.' In this report the recommendation was made to use a capture effect system localizer. In the present report several additional structures, the Braniff and Delta hangar buildings, are modeled. Using the recommended capture effect localizer, it is found that these two additional structures do not add significantly to the derogation, and the category 1 and category 2 operation is still possible on the four instrumented runways tested.

Jordan, L., S. Morin, R. Stone and J. Hull, Performance Predictions for Proposed ILS Facilities at St. Louis Municipal Airport, Report No. TSC-FAA-77-22, Transportation Systems Center, Cambridge, Mass., 1978, 36 pages.
The results of computer simulations of performance of proposed ILS facilities on Runway 12L/30R ar ST. Louis Municipal Airport (Lambert Field) are reported. These simulations indicate than an existing industrial complex located near the runway is compatible with acceptable performance of the proposed facilities. Strict adherence to FAA standards for site grading is suggested to insure satisfactory performance of the glide slope systems.

Jull, E. V. and G. R. Ebbeson, The Reduction of Interference from Large reflecting Surfaces --- Instrument Landing System Interference Reduction at Airports for Aircraft Communication, IEEE Transactions on Antennas and Propagation, Vol. AP-25, July 1977, p. 565-570.
The use of corrugated surfaces to reduce interfering reflections from buildings, in particular instrument landing system (ILS) interference from hangars near airport runways, is proposed. A numerical examination is made of the infinite-comb grating under H-polarized plane-wave illumination with grating spacing of half a wavelength to a wavelength. As with all periodic surfaces investigated, specular reflection can be completely converted to backscatter in the direction of incidence from the surface normal when that direction equals the inverse sine of the wavelength divided by twice the grating spacing and the corrugation depth

is properly chosen. Model measurements at 35 GHz on finned surfaces of finite size under nonplane-wave illumination verify that the surfaces behave essentially as predicted for the infinite comb. The surfaces retain this behavior for frequencies within the ILS range and angles of oblique incidence less than about 10 deg. Practical considerations in implementing these ideas are mentioned.

Jull, E. V. and Heath, J. W., Conducting Surface Corrugations for Multipath Interference Suppression, Proceedings of the Institution of Electrical Engineers - London, Vol 125, No. 12, P. 1321-1326, 1978.

Jull, E. V. and Heath, J.W., Reflection Grating Polarizers, IEEE Transactions on Antennas and Propagation, Vol. 28, No. 4, P. 586-588, 1980.

Kashihara, H. and Hiraiwa, M. All Solid-State DME for Terminal Use, Nec Res. and Dev. (Japan), No. 33, 50-60. 3.
Describes the low power, high accuracy, distance measuring equipment (DME) covering the design philosophy, solutions of problems and the outline of the equipment. The main application of the low power DME is co-location with ILS and TVOR. The low cost of such equipment permits a large expansion of DME service to small airports. The low radiating power facilitates channel assignment by reducing interference levels.

Kobayashi, T., Computer Simulation of Radio Interference on ILS, Radio Research Laboratories, Review, Vol. 20, Sept. 1974, p. 509-516.
Interference effects encountered by instrument landing systems are analyzed on the basis of Huygens' principle and illustrated by computer simulation. Such effects include the phenomenon of reflection or diffraction of radio waves due to radio obstacles. Typical examples are discussed for the cases of a vertically mounted planar metal sheet and a modeled Boeing 747. In Japanese with abstract in English.

Kufert, L., AFCS Operation with a Single ILS Receiver and Either FDC - Implementation, Report No. TFD-76-1192-2, 1978, 12 pages; Requests for this document must be addressed to Commander, Aeronautical Systems Division, Attn: YYCD, Wright-Patterson AFB, OH 45433.
The ILS installation in A/C nos. 1, 2, and 3, uses two ILS receivers, two Flight Director computers and two channels LOC and GS in AFCS. This is a dual LOC and GS configuration; consistent with AFCS operation and monitoring to meet aircraft safety requirements. Since A/C no. 4 and subsequent have one ILS receiver, the System configuration and safety are impacted. To operate compatibly, safely, satisfactorily and with maximum utility, the following system changes are necessary: Configure the ILS receiver, FDC and AFCS to operate from a single ILS source; Design monitors and limiters to protect against failures of a single ILS source; and add circuits to meet performance requirements per flight test results on earlier aircraft. Three system configurations were studied, one was the best. Safety features were designed to detect failures and/or prevent abnormal maneuvers. Performance was met by including proven flight test changes.

Lampard, T. R. G., An ILS Approach Programme Unit for the Radio Environment Monitor, Royal Aircraft Establishment, Farnborough, England, 310450, 1971, 64 pages.

A programme unit is described which is capable of providing appropriate voltage levels into a signal simulator which in turn supplies the necessary RF signal input to the radio environment monitor in such a way as to simulate an ILS approach by an aircraft. The approach can be simulated with or without the various forms of interference which the monitor is capable of detecting.

Lampard, T. R. G., Radio Environment Monitoring for the Category 3 Instrument Landing System, Royal Aircraft Establishment, Farnborough, England, 1970, 310450, 73 pages.
The need for integrity monitoring of the category 3 instrument landing system when used for automatic landing is discussed. A radio environment monitoring system is proposed, based on early experimental work carried out at R. A. E. Farnborough and London Airport, Heathrow. The practical results obtained support the theoretical work in such a way as to indicate that the method of monitoring is a viable proposition.

Lopez, M., The Selection of Glide Slope Antenna Patterns for Use in the Frequency Assignment Process, Federal Aviation Administration, Washington, D. C., Systems Research and Development Service, 340170, 1979, 92 pages.
The frequency assignment process is meant to preclude harmful interference within service volumes. This is done by choosing frequencies in a manner which provides certain minimum co-channel and adjacent channel desired to undesired signal ratios at critical points of the service volume. One of the factors which affects a station's signal strength in space is its horizontal antenna pattern. Consequently, the horizontal pattern can have a substantial effect on the separation required between glide slope frequency assignments. In some cases, it is desirable to consider the actual antenna patterns involved rather than using worst case station separations. This report has been assembled so that the directivity of the horizontal pattern may be considered in the assignment process. For each antenna type, a particular antenna pattern is recommended.

Losch, W., Temper Embrittlement and Surface Segregation, An AES and ILS Study, Acta Metallurgica, Vol. 27, No. 4, p. 567-573, 1979.

Lucas, J. G., Microwave Model of an Instrument-Landing-System Glidepath, Institution of Electrical Engineers, Proceedings, vol. 119, May 1972, pp. 529-536.
A 1/30th scale model of the international standard instrument-landing-system glidepath is described. Interference effects on the linearity of the path in space are investigated, and a theoretical analysis is applied which confirms the integrity of the model operation. The effects due to aircraft taxiing in typical airport regions have been measured using accurate scale models of common civil aircraft. From the results obtained, it is expected than an appreciation of critical areas for air-field taxiway movements will be obtained.

Lucas, J. G. and Young, A. C., ILS Glidepath - New Designs for Severe Sites, IEEE Transactions on Aerospace and Electronic Systems, Vo. 14, No. 6, p.873-883, 1978.

Mac Kinnon, D., Automatic Landing System Optimization Using Inertial Navigation Data and Modern Control Theory, Massachusetts Institute of Technology, Cambridge, Available NTIS.

Masalov, S. A., Wave Diffraction by the Screened Grating Gills with Dielectric Layers, Dopovidi Akademii Nauk Ukrainskoi Rsr Seriya A, Vol. 1980, No. 6, p. 68-71, 1980. Ukrainian.

McKinney, R. L. and J. C. Robinette, AN/TRN-28 Azimuth Variable Scale Factor Evaluation, Report No. NATC-SA-47R-75, 1975, 11 pages, Requests for this document must be referred to Commander, Naval Air Test Center, Patuxent River, MD, 20670.
The AN/TRN-28 Instrument Landing System (ILS) is installed at various Naval Air Stations for shorebased training as an AN/SPN-42 Automatic Carrier Landing System (ACLS) Modes 1/1A/11 monitor and as a primary ILS. In order to insure that the runway centerline and the AN/TRN-28 azimuth centerline are coincident, the AN/TRN-28 azimuth antenna is located approximately 1500 feet in the overrun area at the departure and of the runway. The normal runway AN/SPN-42 ACLS touchdown point is located approximately 1500 feet from the approach end of the runway, which means that the two sites are separated by as much as 8000-9000 feet at some installations. Due to the difference in the touchdown point location relative to the azimuth transmitter site, the bilto will experience sensitivity and error indication differences between the AN/TRN-28 and the AN/SPN-42 azimuth error needles. This evaluation of an AN/TRN-28 azimuth variable scale factor as requested by NESTED letter Code 022: cmp: dla 10550/74-194 of 6 September 1974.

McKinney, R. L. and T. E. Wilson, Evaluation of the AN/ARA-63 System in the C-2A Airplane, Report No. NATC-FT-46R-74, Requests for this document must be referred to Commander, Naval Air Test Center, Patuxent River, MD, 20670.
The suitability of the C-2A Airplane AN/ARA-63 receiver/decoder installation as an Instrument Landing System (ILS) was evaluated during ground and flight tests conducted at the Naval Air Test Center. The AN/ARA-63 system performance was satisfactory with respect to needle sensitivity, signal and antenna coverage limits, structural integrity and electrical wiring installation. Electromagnetic compatibility (EMC) test results were satisfactory; however, the test airplane was not equipped with an operable AN/ARC-94 HF radio and AN/APS-121 weather radar, and limited EMC tests should be conducted with these systems. Utilizing the ID-351 in its present location to display AN/ARA-63 information to the pilot and lack of AN/ARA-63 information display on the co-pilot's instrument panel are part II deficiencies which should be corrected as soon as practicable. One additional part II and four part III deficiencies were also detected. Within the scope of this evaluation, the C-2A airplane AN/ARA-63 installation is satisfactory for use as an ILS in conjunction with certified shorebased AN/TRN-28 and shipboard AN/SPN-41 systems too.

Moussally, G. J., R. A. Moore, J. T. Godfrey and H. F. Hartley, Study of Rough Ground and Grading Criteria for ILS GS Site Preparation, Westinghouse Defense and Electronic Systems Center, Baltimore, MD, Available NTIS.
The scattering of electromagnetic radiation from rough surfaces was studied. The diffuse and specular components of the scattered field were treated separately. Current grading of ILS sites requires rather stringent preparation of the ground. Criteria are developed that reflect the statistical nature of the disturbance in observed signal rather than

simply to consider the maximum allowable phase differences as the basis for establishing a grading criterium.

Murphy, Thomas J. and Frank K. Sayano, Technical Susceptibility to EMC of the A-Scan Tactical Landing System, Final Rept. 1 Feb-30 Jun 71, Sept. 71, 165 p.
The A-Scan Tactical Landing System was analyzed to determine its technical susceptibility to ECM. The system susceptibility was evaluated quantitatively by simulation on a digital computer with guidance provided the results of the technical susceptibility derived theoretically during Phase I of the program. The overall system susceptibility was derived theoretically during Phase I of the program. The overall system susceptibility was determined and several ECCM fixes which reduce the A-Scan susceptibility to ECM are recommended.

Naval Air Test Center, Patuxent River, MD, AN/SPN-41 Instrument Landing System Certification of USS KITTY HAWK, Report No. NATC-FT-47R-73, Requests for this document must be referred to Commander, Naval Air Test Center, Patuxent River, MD, 20670.
The purpose of this report is to certify the AN/SPN-41 as an independent Mode I monitor of the AN/SPN-42 ACLS and as an independent instrument landing system (ILS) for carrier approach operations.

Owens, F. D., Polarization Tests of Scanning Beam Instrument Landing Systems, Report No. NESTEF-72-120, Requests for this document must be referred to Commander, Naval Electronic Systems Command, Attn: Code 0345, Washington, D. C., 20360.
The Naval Electronic Systems Test and Evaluation Facility conducted a series of tests to determine performance differences between horizontally and vertically polarized antennas utilized in K-Band scanning beam ILS (Instrument Landing Systems). Tests consisted of simulated instrument landings as a number of sites selected for potential interference to K-Band radiation. Test results indicate that when reasonable siting is utilized, antennas of both polarizations perform acceptably.

Poschadel, W., Electronic Modulation in ILS, Electrical Communication, Vol. 50, No. 4, p. 305-308, 1975.

Radio Technical Commission for Aeronautics, Washington, D. C., Planned Expansion of FAA Terminal NAVAID Facilities and the Resultant Need for Channel Splitting in the VOR/ILS/DME Bands, Available NTIS.
The planned expansion of terminal navigation aid facilities and the resultant requirement for channel splitting in the VOR/ILS/DME is discussed. Subjects involved in the discussion are: (1) requirements and programs for ILS and VOR, (2) principles of frequency management, (3) geographical separation criteria, (4) computer capability for frequency assignment, (5) present situation in VOR/ILS/DME bands, and (6) plan for phasing in split-channel assignments.

Ramakrishna, S. and M. Sachidananda, Calculating the Effect of Uneven Terrain on Glide Path Signals, IEEE Transactions on Aerospace and Electronic Systems, Vol. AES-10, May 1974, p. 380-384.
A method for calculating the bends in the glide slope due to uneven terrain is presented. A computer program written for the purpose enables

the calculation of the difference in depth of modulation (DDM) at any point, taking into account the effect of uneven terrain. Results are presented for a hypothetical case of a hill in front of the runway. The program enables us to predict the glide slope bends due to irregular terrain, so that proper selection of glide slope antenna location can be made.

Redlich, R. W., R. H. McFarland and J. T. Gorman, Instrument Landing System Improvement Program, Ohio University, Athens, Department of Electrical Engineering, 267460, 1970, 125 pages.
Two new analog-type monitors were designed, built and tested for the purpose of providing a reliable and accurate representation of the ILS localizer signal as seen by an aircraft flying on an approach. One monitor involves detector pickups at the radiating antenna elements, and the other uses seven directional elements located 300 feet in front of the localizer array. Both monitors are designed to give quantitative representations of conditions in the far-field which are generated by a wide aperture source. Mathematical models are described which are to be used for predicting effects on localizer path due to large reflecting surfaces such as hangars and large aircraft. From these models information can be derived as to the most critical placement of the reflecting surfaces. Calculations and discussions of the anomalous behavior of the glide paths at San Francisco, and Oakland, California are presented.

Rondini, Robert A. and Richard H. McFarland, Experimental Validation of Boeing 747 ILS Signal Scattering Calculations for Critical Area Determination, Ohio Univ. Athens Dept. of Electrical Engineering, Final Report No. EER-18-1, Sept 73-Apr 74, Jan 74, 72 p.
Charts showing recommended designated critical areas for aircraft parking on an airdrome are presented. These have been derived from data taken from extensive mathematical modeling of the effects of the Boeing 747 on the ILS signal in space and the recently completed experimental validation of these mathematical models. Presented also are contour charts which can be used to analyze the effects on the ILS of parking of a Boeing 747 at specific locations on the airdome.

Schwenk, J. C. and P. Shafer, General Aviation Avionics Statistics: 1976, Wilson-Hill Associates, Inc., Washington, D. C., 1979, 117 pages.
This report presents avionics statistics for the 1976 general aviation (GA) fleet and is the third in a series titled 'General Aviation Avionics Statistics.' The statistics are presented in a capability group framework which enables one to relate airborne avionics equipment to the capability for a GA aircraft to function in the National Airspace System. The word 'capability' is used in this report to mean in what segments of the airspace an aircraft can fly, under what conditions it can fly, and at what airports it can land. The framework permits the GA fleet to be divided into groups according to their capabilities as dictated by the avionics configurations of the aircraft. Differences in various characteristics of the aircraft are examined among the capability groups. The FAA's 1976 Aircraft Statistical Master File is the source of all the statistical data used in this report.

Sears, W. E., R. P. Zimmer, E. R. Flynt and C. E. Ryan, Preliminary Study of Marine Aircraft Landing Systems, Report No. GIT-A-1417-TR-1, Georgia Institute of Technology, Atlanta, Engineering Experiment Station, 1973, 60 pages.
The requirement of the Navy to develop versatile, rugged, and transportable landing systems suited to Marine Corps aircraft has created specific problems of a diverse, yet highly technical nature. The problems addressed in this report include those associated with (1) Marine landing systems, including low inertia scanning antennas, and (2) polarization effects on microwave landing systems. This report is intended to give an overview of the above three areas with particular attention devoted to some of the more specific problems. The two landing systems of major interest in this study are the Marine Remote Area and Approach Landing System (MRAALS) and the Marine Air Traffic Control and Landing System (MATCALS). With regard to MATCALS, technical problems concerning the integrity of the scanning beam, the radar.

Shih, S. L., ILS Localizer Multipath Analysis, IEEE Trans. Aerosp. and Electron. Syst. (USA), Vol. AES-7, No. 1, 54-60.
The scattering effect of structures on instrument landing system localizer signals is analyzed in this paper. A generalized computer program results which can be used to determine the reflection from surfaces of most materials and orientations for which the radius of curvature is large compared with the wavelength. For most reflecting walls, a closed form solution is used and the computation time is short. The program will enable users to determine the placement of hangars, towers, etc. in airports and to find ways to reduce their effect on localizer facilities.

Skupin, W., Interference Resulting From Traffic Loading in Approach and Landing Systems, Deutsche Gesellschaft fuer Luft- und Raumfahrt. Jahrestagung, 10th, Berlin, West Germany, Sept. 13-15, 1977, 13 p.
Approach and landing systems such as Distance Measurement Equipment (DME) and DME-based Landing System (DLS) are surveyed, and an analysis of the problem of overlapping signals which occurs in some cases of simultaneous use is considered. Signals from aircraft using the same ground station can overlap even in multichannel systems in which the aircraft use different pulse codes. A simulation model is used to evaluate the response signal reliability of DLS in single and multichannel systems. Up to 220 aircraft can use the single channel syustem with a minimum response signal reliability of at least 33%, which accords with experimental data. Response signal reliability in a multichannel system is shown as a function of distance in the presence and in the absence of interference. In German.

Slye, William, Jr., Mike Kelly and William Daniels, EMC Analysis of Air Force Satellite Communications System (AFSCS) Ground Terminals, Technical Report, Apr. 1973, 124 p. SECRET Report. Distribution limited to U.S. Gov't. agencies only.

Smith, R. D., The Selection of ILS Localizer Antenna Patterns for use in the Frequency Assignment Process, Federal Aviation Administration, Washington, D. C., Systems Research and Development Service, 340170.
The frequency assignment process is meant to insure interference-free service within the service volume. This is done by choosing frequencies

in a manner which provides certain minimum co-channel and adjacent channel desired to undesired signal ratios at critical points of the service volume. One of the factors which affects a station's signal strength in space is its horizontal antenna pattern. ILS localizer antennas have undergone significant changes in recent years. In order to reduce siting effects, antenna patterns have evolved from the nearly omnidirectional 8-loop to the highly directional traveling wave and log periodic dipole antennas. The horizontal localizer antenna pattern now has a substantial effect on the separation required between localizer stations. This report compares measured and theoretical data with FAA antenna pattern specifications. For each antenna type, a single horizontal antenna pattern is recommended for use in the frequency assignment process.

Spahr, B. W. and H. E. Powell, Jr., Test and Evaluation of the AN/ASH-20(V) Crash Position Locator/Flight Data Recorder and the AN/ARA-63 Instrument Landing System in the KC-130R Airplane, Report No. NATC-AT-40R-76, 1976, 36 pages, Requests for this document must be referred to Commander, Naval Air Test Center, Patuxent River, MD, 20670.
NAVAIR Test Center was tasked with determining the service suitability of the AN/ASH-20(V) Crash Position Locator/Flight Data Recorder (CPL/FDR) and the AN/ARA-63 Receiver/Decoder Group (RDG) Instrument Landing System (ILS) installed on the KC-130R airplane. An EMI evaluation was conducted to determine electromagnetic compatibility (EMC) of these two systems with other on-board avionics, instruments and displays.

Spencer, Roy C., Development and Test of Low Impact Resistance Structures. Volume II. Interference of Low Impact Resistance Structures with Instrument Landing System (ILS) Signals, ASE Inc Pennsauken N.J., Final rept. of phase 1, Feb. 1974, 89 p.
Scattering of radiation by the ALS light supports in front of the Course Antenna will not result in course errors. There are three reasons for this conclusion: (1) The forward scattering from the poles is weak. (2) Each pole is so close to the center line that no detectible phase change could be noted by an incoming plane. (3) The symmetry arrangement of poles cancels out any asymmetrical affect of one pole.

Thourel, L., A. Sarremejean, and J. Lueluc, Radioelectric Pollution of Air Navigation Aids, International Conference on Electronic Navigational Aid Systems for Aircraft, Paris, France, November 14-18, 1977, Proceedings. (A79-13227 03-04) Paris, Federation des Industries Electriques et Electroniques, 1977, p. 41-44.
Attention is given to the sources of interference in instrument landing systems including transmitter background noise, the applications of high-frequency currents, and electronic controls of motors and generators. Sources of radio-compass interference are also discussed noting procedures for estimating the magnitude of such interference. Possible sources for so-called false beacons are identified for various altitudes. In French.

Tucker, R. E. Jr., H. A. Diel, W. H. Agnew and R. W. Huff, Evaluation of the AN/ARA-63 System Installation in the F-4B, F-4J and RF-4B Aircraft, Report No. NATC-FT-76R-74, Requests for this document must be referred to Commander, Naval Air Test Center, Patuxent River, MD, 20670.
The F-4B, F-4J and RF-4B airplane AN/ARA-63 system installations were evaluated during shorebased tests conducted at the Naval Air Test

Center. Shipboard evaluation of the F-4B/J airplane AN/ARA-63 installations were conducted in USS KITTY HAWK (CV-63) and the test F-4B/J airplanes were utilized to evaluate and certify the AN/SPN-41 installations in USS CONSTELLATION (CVA-64), USS INDEPENDENCE (CV-62), USS FORRESTAL (CVA-59) and USS RANGER (CVA-61). The F-4B/J and RF-4B airplane AN/ARA-63 system coverage limits, quantitative performance, structural integrity, functional capability and reliability were satisfactory during the test programs. Six part III AN/ARA-63 installation/design deficiencies were detected which should be avoided in future.

Vickers, T. K., ATC and the Offshore Airport, Journal of Air Traffic Control, vol. 15, July-Aug., 1973, pp. 24-29.
The principal problems involved in the design, construction, and operation of offshore airports are discussed on the basis of cost/benefit considerations. Possible solutions to access, runway, lighting, safety, and weather problems are examined. Particular attention is given to problems arising from the possible reflection of ILS localizer and glidepath signals from surface ships and to the problem of minimizing interference with ILS glideslope.

Wilson, C. R. and Vicente, R. O., An Analysis of the Homogeneous ILS Polar Motion Series, Geophysical Journal of the Royal Astronomical Society, Vol. 62, No. 3, p.605-616, 1980.

MLS-MICROWAVE LANDING SYSTEM

Benjamin, J., Interference Tests of a Microwave Guidance System (CPILS), Report No. RAE-TR-71225, Royal Aircraft Establishment, Farnborough, England, 1971, 69 pages, Distribution to DDC users only.
A series of measurements to determine the effect of other aircraft movements on the microwave guidance provided by CPILS is reported. The results show that the interference problems associated with VHF ILS have been eliminated but that there are some new problems due to shadowing and scalloping - common to microwave systems - which may have a small affect on overall performance.

Calhoun, L. C., S. Kazel and A. E. Brindley, Special Analysis of Doppler MLS Video Data, IIT Research Institute, Chicago, Ill., Air Force Flight Dynamics Lab, Wright-Patterson AFB, Ohio, 175350, Final Report, 26 Aug.-16 Dec. 1974.
The report describes an experimental effort to examine the spectral content of flight test data recorded during phase II of the national landing plan. The data examined here were obtained from the ITT and Hazeltine Doppler systems flown at NAFEC and Wallops station respectively. A primary objective of the effort was to determine from the spectra whether in fact either of the systems experienced significant multipath interference during flight tests. The hardware used for this analysis was an improved version of that generated by IITRI for the USAF's concept validation program.

Desai, M. and D. Mackinnon, Performance Bound of an Aircraft Lateral Position Control System Using the Microwave Scanning Beam Landing System, 5th IFAC Symposium on Automatic Control in Space (abstracts only received), Geona, Italy, Genoa, Italy, 173 pp. 105-6. O. Inst. Internat. Communicazioni. Internat. Federation Automatic Control. 4-8 June 1973.
The scanning-beam microwave landing system (MLS) has been recommended to upgrade and eventually replace the present VHF instrument landing system (ILS). The increased accuracy, volume coverage and resistance to overflight interference of the MLS form an important basis for the terminal area traffic control systems of the future. In particular the MLS will permit highly accurate four-dimensional flight along linear and curved paths and the realization of fully automatic all-weather landing.

Frazier, R. A., Compatibility Analysis of the Texas Instruments, ITT/Gilfillan, Bendix, and Hazeltine Microwave Landing System Proposals, IIT Research Institute, Annapolis, MD; Federal Aviation Administration, Washington, D. C., Electromagnetic Compatibility Analysis Center, Annapolis, MD, 175300, 1974, 9 pages.
The Texas Instruments Microwave Landing System (TI MLS) proposal was modeled in a 1980 high density environment. ITS channel scheme and signal format were analyzed with the aid of a computer program to determine its adequacy in such a high density environment. Three other MLS proposals (ITT Gilfillan, Hazeltine, Bendix) were also examined. A comparison was made between the technical parameters of each and the parameters recommended by the Radio Technical Commission for Aeronautics Special Committee-117 (RTCA SC-117) to determine if the results of a previous analysis of the SC-117 MLS format could be applied to any of the three proposals.

Frazier, R. A., Compatibility and the Frequency Selection Problem ... Microwave Landing System Applications, IEEE Transactions on Electromagnetic Compatibility, Vol. EMC-17, Nov. 1975, p. 248-254, U.S. Department of Transportation.
An automated model that calculates the frequency separation requirements for interference-free environment is described. The model assigns a channel to each system in the environment based on the frequencies available to each. The model calculated inter-system, antenna coupled interference levels only. It uses an iterative, but nonexhaustive, process which attempts to develop a compatible assignment. Preassignment checks are performed to determine if a complete assignment is impossible based on the number of frequencies available to each system and the separations between these frequencies. The results of a recent application of the model to an environment of microwave landing guidance systems including the proposed MLS is given.

Frazier, Robert A., In-Band Compatibility Analysis of the RTCA-Proposed Microwave Landing Guidance System (LGS) and Candidate Interim Systems, Final Report No. ECAC-PR-72-069, Jul. 72, 231 p.
The electromagnetic compatibility among the proposed RTCA SC-117 next generation microwave landing guidance system (LGS) and several existing microwave landing guidance systems proposed as interim system candidates was analyzed. The signal format for LGS was developed by Special Committee 117 of the Radio Technical Commissison for Aeronautics. The angle data localizer and glideslope portions of the systems were deployed in an FAA-predicted high density 1980 environment and the possibility of compatible operation was assessed with the assistance of a computer analysis. The compatibility among the systems' DME functions was analyzed using frequency/distance considerations. The EMC between the landing guidance systems and other in-band domestic systems and between the LGS and a foreign microwave enroute guidance satellite system (DIOSCURES) were analyzed using frequency/distance considerations.

Gawthrop, P. E., A Comparison of the Frequency Requirements of an Earlier Design MLS and TRSB MLS, IIT Research Institute, Annapolis, MD, 1976, 27 pages.
Channel assignments for an earlier design Microwave Landing System (MLS) and the Tims Reference Scanning Beam (TRSB) MLS are compared. This comparison shows the advantages of the TRSB MLS signal format and channel plan over that of the earlier design system format and channel plan. This report considers the TRSB MLS design as it was at the time the study was completed. Since that time a number of design changes have been made and are not addressed in the report.

Graziani, D., Precision DME Equipment, Electronics and Civil Aviation; International Conference, Paris, France, June 26-30, 1972, Reports, Volume 2 (A73-32426 15-21) Paris, Editions Chiron, 1972, pp. 828-838.
Civil and military authorities considered it necessary to adopt precision DME as a complememtary aid to the new microwave landing system. The accuracy was to be better than 8 m., and since such accuracy is not possible with the ICAO DME, new techniques had to be developed solving both the problems of accuracy and security on the L band. A frequency hopping principle is described in which it is proposed to stay on each

hopped channel for 3 msec (dwelling time), employing 0.1 msec for hopping from one channel to the other (settling time).

Harlow, R. A., Flight Measurements of Interference to Doppler MLS Azimuth Signal from Aircraft Operating Close to the Localizer Aerial, Report No. RAE-TM-Avionics-170, Apply to British Ministry of Aviation Supply via the appropriate channel, 1974, 42 pages.

Hughes, N. H., K. Watling, R. A. Harlow and M. E. Smith, A Study of the Interface Between Air Traffic Control and the Microwave Landing System, Report No. RAE-TM-Avionics-106, Apply to British Ministry of Aviation Supply via the appropriate channel, 1972, 123 pages.

Madden, P., and M. Desai, Nonlinear trajectory following in the terminal area -- Guidance, control and flight mechanics concepts using the microwave landing system, American Institute of Aeronautics and Astronautics, Guidance and Control Conference, Key Biscayne, Fla., Aug. 20-22, 1973, 15 p., U. S. Department of Transportation.

National Aviation Facilities Experimental Center, Atlantic City, N.J., 240550, TRSB Microwave Landing System Demonstration Program at Charleroi, Belgium, Final Report, 1978, 53 pages.
The demonstration at Gosselies Airport, Charleroi, Belgium, was held in conjunction with the United States TRSB demonstration program, and was the sixth in a series of operational demonstrations of several TRSB system configurations at selected airports in the United States and abroad. The TRSB small community system was installed to service runway 25, the runway with a commissioned instrument landing system. Flight checks established that no mutual interference resulted. Operational demonstrations were made utilizing FAA Boeing 727 and Convair 880 test aircraft. Flight performance data were acquired with the Boeing 727 test aircraft only. Flight profiles included approaches on centerline and offset plus and minus 1 and 2 degrees at various elevation angles, and radials at constant altitude on centerline and offset plus and minus 10 degrees. Results of the operational demonstrations indicated that performance of the TRSB small community azimuth subsystem met ICAO (AWOP) 'full capability system' requirements. Although an accurate assessment of the elevation subsystem performance was not possible due to lack of adequate tracking data, the elevation angle deviations about an averaged value were well within ICAO (AWOP) 'full capability system' error limit boundaries.

Raytheon Co., Wayland, Mass., Microwave Landing System (MLS) Development Plan as Proposed by Raytheon during the Technique Analysis and Contract Definition Phase of the National MLS Development Program, Available NTIS.
The studies and analyses to support the development of a microwave landing system are presented. The subjects considered are: (1) the economic model and life cycle costs, (2) time reference angular measurement against coding on the beam, (3) integrity enhancement by dual angle mode encoding, (4) beam forming network, (5) electronic scan compared with mechanical scan, and (6) system configuration and development tradeoffs. The compatibility of the microwave system with airport installations and with aircraft types, missions, and aerodynamics is analyzed.

Rosien, R. A. and L. L. Sanders, The Performance of the Doppler Microwave Landing System in a Multipath Environment, ITT Gilfillan, Inc., Van Nuys, Calif., In AGARD Air Traffic Control Systems, 9 p. (See n73-23689 14-21). The success of the Doppler microwave landing system in meeting the multipath challenge is described. Techniques, which can be used to eliminate the effects of multipath, are described. The various multipath sources are listed together with the specific requirements for each. Performance data are given which have been gathered from three sources: (1) computer simulation; (2) laboratory tests of an equipment model; and (3) field tests on two experimental Doppler systems. The data indicate that the Doppler MLS, utilizing the simplest form of signal processing, namely, a filter and zero crossing counter, may be adequate under limited accuracy and siting conditions. For performance in heavy multipath, some form of narrowband device will probably have to be employed in order to satisfy the accuracy and minimum coverage angle requirements.

Texas Instruments Inc., Dallas, Microwave Landing System (MLS) Development Plan as Proposed by Texas Instruments, Inc., During the Technique Analysis and Contract Definition Phase of the National MLS Development Program, Volume V, Appendices E1 and E2, 1972, 263 pages.
Contents: Mechanical scan studies, atmospheric studies.

Watling, K. and R. C. Rawlings, A Study of the Effects of Multipath on Automatic Approach Performance Using a Doppler Microwave Landing System, Report No. REA-TM-Avionics-168, Apply to British Ministry of Aviation Supply via the appropriate channel, 1974, 75 pages.

DOT/FAA
RD-82/43

Instrument landing system
localizer receiver performance
in the presence of co-channel
interference /
00026826