COPY 1

DOT/FAA/RD-82/49

Program Engineering &
Maintenance Service
Washington, D.C. 20591

FAA WJH Technical Center
00026863
FEDERAL AVIATION ADMINISTRATION

MAR 18 1983

TECHNICAL CENTER LIBRARY
ATLANTIC CITY, N.J. 08405

Traffic Alert and Collision Avoidance System

Developmental Simulation

G. P. Boucek, Jr.
R. W. White
W. D. Smith
J. M. Kraus

Boeing Commercial Airplane Company
P.O. Box 3707
Seattle, Washington 98124

July 1982
Final Report

This document is available to the U.S. public through the National Technical Information Service, Springfield, Virginia 22161.

DOT/FAA
RD-82/49

U.S. Department of Transportation
Federal Aviation Administration

NOTICE

This document is disseminated under the sponsorship of the Department of Transportation in the interest of information exchange. The United States Government assumes no liability for its contents or use thereof.

Technical Report Documentation Page

1. Report No. DOT/FAA/RD-82/49	2. Government Accession No.	3. Recipient's Catalog No.
4. Title and Subtitle TRAFFIC ALERT AND COLLISION AVOIDANCE SYSTEM - DEVELOPMENTAL SIMULATION		5. Report Date JULY 1982
		6. Performing Organization Code
7. Author(s) G. P. BOUCEK, JR.; R. W. WHITE; W. D. SMITH; J. M. KRAUS		8. Performing Organization Report No.
9. Performing Organization Name and Address SYSTEMS TECHNOLOGY, RESEARCH - CREW SYSTEMS BOEING COMMERCIAL AIRPLANE COMPANY P. O. BOX 3707 SEATTLE, WASHINGTON 98124		10. Work Unit No. (TRAIS)
		11. Contract or Grant No.
12. Sponsoring Agency Name and Address U.S. Department of Transportation Federal Aviation Administration Program Engineering & Maintenance Service Washington, D.C. 20591		13. Type of Report and Period Covered FINAL REPORT 1981 - APRIL 1982
		14. Sponsoring Agency Code APM-430
15. Supplementary Notes		

16. Abstract

This report describes one of a series of studies being conducted to develop the Traffic Alert and Collision Avoidance System (TCAS). The purpose of this study was to investigate display technology appropriate for the presentation of TCAS information on both conventional and advanced flight decks. The specific objectives of this study phase were to:

- Evaluate the alerting effectiveness of candidate TCAS display concepts
- Determine the variability of including a caution level alert (TA) that would precede the warning (RA)
- Identify minimum information requirement for the RA and TA
- Select a TCAS display concept to be used in the operational simulation

In the tests, experienced transport pilots were presented TCAS alerts while flying a transport simulator. Their responses to the alerts were recorded as were their opinions about the system. Display characteristics are presented with a heavy reliance being put on the recommendation in "Aircraft Alerting System Standardization Study" DOT/FAA/RD-81/38/II.

17. Key Words COLLISION AVOIDANCE, AIRCRAFT SEPARATION ASSURANCE; ALERT; WARNING SYSTEMS; ALERTING SYSTEMS; SIGNAL RESPONSE; VISUAL ALERTS; SIGNAL DETECTION;		18. Distribution Statement DOCUMENT IS AVAILABLE TO THE U. S. PUBLIC THROUGH THE NATIONAL INFORMATION SERVICE, SPRINGFIELD, VIRGINIA 22161	
19. Security Classif. (of this report) UNCLASSIFIED	20. Security Classif. (of this page) UNCLASSIFIED	21. No. of Pages 187	22. Price

Form DOT F 1700.7 (8-72) Reproduction of completed page authorized

METRIC CONVERSION FACTORS

Approximate Conversions to Metric Measures

Symbol	When You Know	Multiply by	To Find	Symbol
		LENGTH		
in	inches	*2.5	centimeters	cm
ft	feet	30	centimeters	cm
yd	yards	0.9	meters	m
mi	miles	1.6	kilometers	km
		AREA		
in^2	square inches	6.5	square centimeters	cm^2
ft^2	square feet	0.09	square meters	m^2
yd^2	square yards	0.8	square meters	m^2
mi^2	square miles	2.6	square kilometers	km^2
	acres	0.4	hectares	ha
		MASS (weight)		
oz	ounces	28	grams	g
lb	pounds	0.45	kilograms	kg
	short tons (2000 lb)	0.9	tonnes	t
		VOLUME		
tsp	teaspoons	5	milliliters	ml
Tbsp	tablespoons	15	milliliters	ml
fl oz	fluid ounces	30	milliliters	ml
c	cups	0.24	liters	l
pt	pints	0.47	liters	l
qt	quarts	0.95	liters	l
gal	gallons	3.8	liters	l
ft^3	cubic feet	0.03	cubic meters	m^3
yd^3	cubic yards	0.76	cubic meters	m^3
		TEMPERATURE (exact)		
°F	Fahrenheit temperature	5/9 (after subtracting 32)	Celsius temperature	°C

*1 in = 2.54 (exactly). For other exact conversions and more detailed tables, see NBS Misc. Publ. 286, Units of Weights and Measures, Price $2.25, SD Catalog No. C13.10:286.

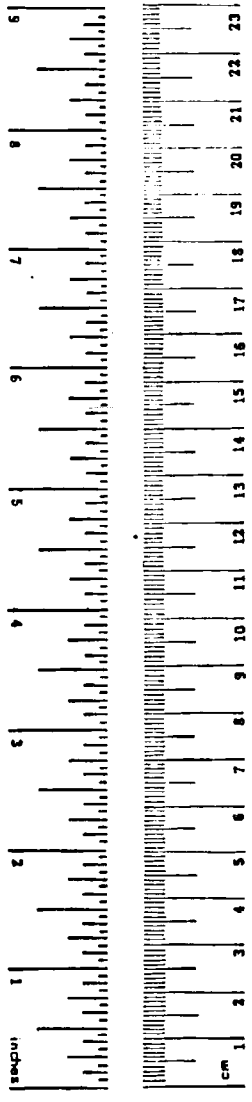

Approximate Conversions from Metric Measures

Symbol	When You Know	Multiply by	To Find	Symbol
		LENGTH		
mm	millimeters	0.04	inches	in
cm	centimeters	0.4	inches	in
m	meters	3.3	feet	ft
m	meters	1.1	yards	yd
km	kilometers	0.6	miles	mi
		AREA		
cm^2	square centimeters	0.16	square inches	in^2
m^2	square meters	1.2	square yards	yd^2
km^2	square kilometers	0.4	square miles	mi^2
ha	hectares (10,000 m^2)	2.5	acres	
		MASS (weight)		
g	grams	0.035	ounces	oz
kg	kilograms	2.2	pounds	lb
t	tonnes (1000 kg)	1.1	short tons	
		VOLUME		
ml	milliliters	0.03	fluid ounces	fl oz
l	liters	2.1	pints	pt
l	liters	1.06	quarts	qt
l	liters	0.26	gallons	gal
m^3	cubic meters	35	cubic feet	ft^3
m^3	cubic meters	1.3	cubic yards	yd^3
		TEMPERATURE (exact)		
°C	Celsius temperature	9/5 (then add 32)	Fahrenheit temperature	°F

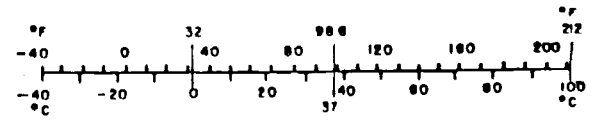

PREFACE

This report documents one of a series of studies being conducted to develop and implement an effective collision avoidance system. The primary purpose of this study was to investigate the methods of presenting the system information to the crew and make recommendations concerning the display system. This volume provides the results of the study and a candidate display system concept.

The authors wish to express appreciation to the many pilots who participated in the tests and to the various organizations and companies which permitted the participation; FAA, NASA, Boeing, American Airlines, Republic Airlines, United Airlines, U. S. Air, and Western Airlines. The contract sponsor is the Federal Aviation Administration, and technical guidance was provided by Mr. Richard Weiss, APM-430, the contract monitor.

TABLE OF CONTENTS

	PAGE
1.0 INTRODUCTION AND BACKGROUND	1
1.1 Report Organization	3
2.0 EXECUTIVE SUMMARY	5
2.1 Program Background	5
2.2 Developmental Simulation Testing	5
2.3 Candidate System Description	9
2.4 Follow-on Verification and Evaluation	10
3.0 TEST FACILITY	11
4.0 DEVELOPMENTAL SIMULATION - TEST DESCRIPTION AND RESULTS	13
4.1 Test Objectives	13
4.2 Experimental Design	14
4.2.1 Test Design	14
4.2.2 Intruder Flight Path	24
4.2.3 Simulation TCAS Logic	24
4.3 Pilot Sample	26
4.4 Crew Tasks	26
4.4.1 Flight Task	26
4.4.2 System Alert Response Tasks	29
4.4.3 TCAS Alert Response Task	35
4.5 Test Procedures	35
4.6 Measurement Technique	42
4.6.1 Performance Measures	42
4.6.2 Subjective Measures	42
4.7 Data Reduction and Analysis	45
4.7.1 Experimental Hypothesis	45
4.8 Test Results	48
4.8.1 Detection Times	48
4.8.2 Response Times	49
4.8.3 Missed Alerts and Incorrect Responses	55
4.8.4 Pilot Input	55
5.0 DISCUSSION AND CONCLUSIONS	63
6.0 TCAS CANDIDATE SYSTEM DESCRIPTION	69
6.1 System Design Objectives	69
6.2 TCAS Display Configuration	69
6.2.1 Master Alerts	71
6.2.2 Resolution Advisory Displays	74
6.2.3 Traffic Information Display	76
6.3 Follow-on Verification and Evaluation	77
REFERENCES	79
BIBLIOGRAPHY	81
APPENDIX A TEST FACILITIES	A-1
APPENDIX B PILOT TRAINING CHECKLIST	B-1
APPENDIX C POST FLIGHT QUESTIONNAIRE	C-1
APPENDIX D DEBRIEFING QUESTIONNAIRE	D-1

LIST OF FIGURES

FIGURE NO:	TITLE	PAGE
1.0-1	Guidelines for Standardizing Alerting Functions and Methods	4
3.0-1	Kent Visual Flight Simulation Center	12
4.2.1-1	Developmental Simulation Test Design	15
4.2.1-2	TCAS Alerting System	17
4.2.1-3	IVSI Command Display for Simulation Tests	18
4.2.1-4	Developmental Simulation LED Display Formats	19
4.2.1-5	Tabular Traffic Display - Without Bearing	22
4.2.1-6	Tabular Traffic Display - With Bearing	22
4.2.1-7	Currently Used Graphic Format	23
4.2.1-8	Advanced Graphic Format	23
4.2.2-1	Intrusion Scenarios	25
4.4.1-1	Flight Deck	28
4.4.1-2	Developmental Simulation Flight Path	30
4.4.1-3	Visual Flight Take-off	31
4.4.2-1	Pilot's Response Panel	36
4.4.3-1	TCAS Resolution Advisory Alerts and Example IVSI Presentation	37
4.8.1-1	Initial Detection Time as a Function of Alert Display	51
4.8.1-2	Alert Detetion Time - TA Display	52
4.8.2-1	A Comparison of Response and Detection Times as a Function of the Traffic Display	54
4.8.2-2	Comparison of Response and Detection Times as a Function of the Resolution Advisory Display	56
4.8.4-1	Pilot Opinion Concerning the TA Display Usefulness	59
4.8.4-2	Pilot Opinion Concerning the RA Display Clarity	62
5.0-1	Typical Response Times as a Function of Display Type	67
6.2.1-1	Recommended Placement of Visual Signals	72
A.0-1	Kent Visual Flight Simulation Center	A-3
A.1-1	Side View of Blue Cab	A-4
A.1.1-1	Blue Cab Front Panel Layout	A-6
A.2.1-2	Internal View of Blue Cab	A-7
A.2-1	CAS Simulation Equipment Layout	A-8
A.2.1-1	Advisory Message Byte Definition	A-11
A.2.3-1	TCAS Audio-Visual (TAV) Unit	A-14
A.2.3-2	TAV Front Panel Layout	A-15
A.2.3-3	Block Diagram of LED TCAS Display	A-18
A.2.4-1	Block Diagram of FAA-Supplied Airborne Intelligent Display (AID) System	A-19
A.2.4-2	AID Message Byte Defintion	A-20
A.3.1-1	Audio Equipment Block Diagram	A-22
A.3.1-2	Audio Equipment Rack Layout	A-23
A.3.2-1	Video System Layout	A-25
A.3.3-1	Master Conductor Console Layout	A-27
A.3.3-2	System Block Diagram for Master Control Console Bus Interface	A-28

LIST OF TABLES

TABLE NO.	TITLE	PAGE
4.3-1	Summary of Pilot Experience	27
4.4.1-1	ATC Communication	32
4.4.2-1	Operational and Systems Condition for Alerts and Their Associated Response	33
4.5-1	Random Treatment Assignments	40
4.5-2	Daily Test Schedule	41
4.7-1	Sample of Analysis of Variance Model and Summary Table for a Factorial Experiment with Repeated Measures on Some of the Factors	46
4.8.1-1	ANOVA Summary Table for Initial Detection Time	50
4.8.2-1	ANOVA Summary Table for Response Times	53
A.2.1-1	Summary of Host-to-BEU Simulation Unit Message Formats	A-10
A.2.1-2	Definition of Parallel Data Sent to IVSI and TAV by MicroNova	A-12
A.2.3-1	Voice Vocabulary List	A-17

LIST OF ABBREVIATIONS

ADI	Attitude Director Indicator
AID	Airborne Intelligent Display
ALPA	Airline Pilots Association
ANOVA	Analysis of Variance
APA	Allied Pilots Association
ARP	Aerospace Recommended Practice
ASA	Aircraft Separation Assurance
ATA	Air Transport Association
ATC	Air Traffic Control
BCAS	Beacon Collision Avoidance System
BEU	BCAS Experimental Unit
CAS	Collision Avoidance System
X^2	Chi-squared
CRT	Cathode Ray Tube
dB	Decibel
df	Degrees of Freedom
DME	Distance Measuring Equipment
EADI	Electronic Attitude Director Indicator
EHSI	Electronic Horizontal Situation Indicator
FAA	Federal Aviation Administration
fpm	Feet per minute
ft-L	Footlambert
G	Gravity
HSI	Horizontal Situation Indicator
HUD	Head-up Display
Hz	Hertz
IAS	Indicated Airspeed
IFR	Instrument Flight Rules
ILS	Instrument Landing System
IMC	Instrument Meteorological Conditions
IVSI	Instantaneous Vertical Speed Indicator
KIAS	Knots Indicated Airspeed
LED	Light Emitting Diode
MCC	Master Control Console
ml	Millilambert
msec	Millisecond
MSL	Mean Sea Level
NASA	National Aeronautics and Space Administration
nmi	Nautical Miles
PA	Proximate Advisory
PROM	Programmable Read Only Memory
PWI	Proximity Warning Indicator
r	Correlation Coefficient
RA	Resolution Advisory
RAM	Random Access Memory
SAE	Society of Automotive Engineers
sin	Sine of an angle
S/N	Signal to Noise Ratio
TA	Traffic Advisory
TAV	TCAS Audio Video
TCA	Terminal Control Area
TCAS	Traffic Alert and Collision Avoidance System
VFR	Visual Flight Rules
VMC	Visual Meteorological Conditions
$\bar{X}$	Arithmetic Mean

GLOSSARY

Abnormal Conditions	-	Conditions or situations which require other than normal procedures.
Advisory Alert	-	Operational or aircraft system conditions that require crew awareness and may require crew action.
Caution Alert	-	Abnormal operational or aircraft system conditions that require immediate crew awareness and require prompt corrective or compensatory crew action.
Developmental Simulation	-	Phase I of the TCAS display program with the objective of developing minimum information requirements for the TCAS II display system and to recommend a candidate configuration.
Detection Time	-	The time from alert initiation or change of state (caution to warning until when the pilot indicates a recognition of the condition by depressing the detection button.
G	-	Acceleration equivalent to gravity or 32.2 feet per second squared.
Hertz	-	Unit of frequency equal to one cycle per second.
Intruder	-	An aircraft which violates the TCAS criteria and represents a potential threat.
Non-mode C Aircraft	-	An aircraft that has a transponder but has no altitude reporting from the transponder.
Operational Simulation	-	Phase II of the TCAS display program with the objective of developing and validating operational cockpit procedures for a TCAS encounter.
Own Aircraft	-	The subject aircraft equipped with the hypothetical TCAS II system.
Procedure	-	Predetermined set of actions to be taken by a crewmember in a specific operational situation. May or may not be written in a readily accessible form (e.g., check-list.

Resolution Advisory	-	A warning level alert - a display indication given to the pilot recommending a maneuver to increase separation relative to an intruding aircraft. Corrective, preventative and vertical speed limit advisories constitute the resolution advisories.
Response Time	-	The time from alert initiation (RA) until when the pilot had performed the correct response.
TAU	-	A derived quantity usually expressed in seconds, which represents the time to the point of closest approach between the own aircraft and an intruder. It is defined as range divided by range rate.
TCAS I	-	A less sophisticated collision avoidance system designed primarily for general aviation.
TCAS II	-	A more sophisticated system providing collision avoidance capabilities in high density areas and designed for larger aircraft.
Time Critical Warning	-	Warning condition in which time to respond is extremely limited and the response to the alert is the most important action the pilot can make at that specific time (e.g. ground proximity, collision avoidance, windshear, etc.)
Traffic Advisory	-	A caution level alert - a display indication that there is traffic in the immediate vicininty which could cause a resolution advisory. The information contains no suggested maneuver.
Traffic Information Display	-	A display used to provide the pilot with information about TCAS defined intruder aircraft. It may also be used to present information about non-tau based surrounding traffic.
Transponder	-	Piece of equipment on own aircraft which when interrogated by a radar signal emits a coded reply containing specific information about the aircraft.
Unequipped Aircraft	-	An aircraft that has no TCAS system and may or may not have a mode C transponder.

Warning Alert	-	Emergency operational or aircraft system conditions that require immediate corrective or compensatory crew action.
Workload	-	A relative term indicating the amount of total mental and physical task loading on a crew member.

1.0 INTRODUCTION AND BACKGROUND

In mid-1981 the Federal Aviation Administration announced the details of an airborne-based collision avoidance system in a technical working symposium sponsored by the agency. The Traffic Alert and Collision Avoidance System (TCAS) was described in two levels of sophistication. The simplest level, TCAS I, alerts the pilot of proximity of another aircraft with a visual and/or aural alert. This system is directed primarily toward providing some protection for smaller aircraft. The TCAS II system on the other hand is designed for larger aircraft and has a higher sophistication and cost. The capabilities that have been attributed to the TCAS II system include:

- "It will have the ability to transmit to others (TCAS I and TCAS II equipped aircraft) traffic advisory information (range, bearing, differential altitude, above/below information).

- It will provide collision avoidance protection independently from the ground ATC system using vertical maneuvers, with potential expansion to horizontal maneuvers should technical and economic feasibility be demonstrated.

- Like TCAS I, it will have an integral transponder capable of responding on Modes A, C and S.

- TCAS II will provide alert and advisory information to the aircraft equipped only with TCAS I, while in the case of two aircraft equipped with TCAS II, coordinated advisories would be provided." (1).

As was pointed out in the symposium, much of the technology associated with the TCAS II system was developed under the earlier Beacon Collision Avoidance System (BCAS) program. The technology discussed was primarily sensor and software based providing a detailed description of how the system will generate information about other aircraft. Of equal importance to the overall operation of the system, however, is the presentation of this information to the crew in such a way that it can be used effectively in an operational aircraft.

As was pointed out "it is difficult to evaluate even a limited array of display devices in operational aircraft, and it is similarly difficult to perform comprehensive workload analyses since the variety of flight scenerios is necessarily limited by safety considerations." It was therefore planned to answer these questions in simulator studies.

In August 1981, the Boeing Commercial Airplane Company, Crew Systems Group was awarded a contract by the FAA for the purpose of assisting in the determination of flight deck display requirements for operational implementation of the TCAS II system in commercial transport aircraft. The program is a two phase effort, the Developmental Simulation and the Operational Simulation. The first phase combined a number of resolution advisory as well as traffic advisory display concepts with an integrated crew alerting system to be evaluated for effectiveness by Government, industry and line pilots. The second phase will have primarily line qualified flight crews exercise the TCAS II system in a fully certified operational transport training simulator in order to determine the proper operating procedures, identify workload impact, validate the display system and in general give the system an operational "shakedown" prior to entering the TCAS operational evaluation flight test phase.

Since the transfer of information to the crew in a timely manner about an abnormal situation is the definition of an alert, the cornerstone of any display concept for TCAS should be the voluntary guidelines on alerting systems issued by the FAA in 1981 (2). These guidelines were a culmination of seven years of research sponsored by the FAA and directed toward the improvement and standardization of flight deck alerting systems. This work began by studying concepts for an independent altitude monitor (9) for the reduction of inadvertent terrain impact alerts. It was then expanded to consider the alerting problem as a whole and to look at conventional flight deck alerting methods. The findings from these studies (3,4,5) revealed that there had been a significant increase in the amount of information being presented to the crew and that very little effort had been expended in attempting to standardize this information. Pilots were viewing crew alerting as a nuisance rather than a help. In a 1977 report (6) Cooper stated that "caution and warning systems were originally installed as a reasonable means of assisting pilots to maintain safe, reliable, economical system operation in the face of

high workloads. However, these systems, intended to reduce hazards, are themselves becoming hazards. The vast increase in the number of alerts and the frequent occurrence of false or nuisance alerts impose heavy demands on the aircrew. More alerts require more memorization, higher workloads, and could induce a higher probability of error."

The alerting system guidelines which were produced through a joint effort by the Boeing, Lockheed and McDonnell Douglas Aircraft Companies, describe in detail the recommendations for presentation of alerts of any urgency (see Figure 1.0-1). From the research conducted during this program a set of warning level alerts were identified that were defined as "time-critical." The report (2) describes the alerting methods and media for presenting the time-critical warnings. This data is relevant to the present program because one of the warnings identified as fitting into the time-critical category was the collision avoidance alert. Therefore, in selecting the display characteristics to be tested in the developmental simulation it was necessary to review the crew alerting data base and select those characteristics most likely to provide the most effective information transfer. The literature, test results and pilot's subjective input were used to identify the candidate TCAS II display concept.

1.1 Report Organization

Section 2 of this report contains an executive summary of the major activities and findings of the Developmental Simulation testing effort. A general description of the test facility is presented in Section 3. The methodology, equipment, and results of the testing are discussed in Section 4. Discussions of the major findings and the conclusions drawn from these data may be found in Section 5 and Section 6 describes the objectives of the next study phase.

The Appendices at the end of this report describe in detail the test facility. Also included are the questionnaire that were used to obtain pilot input for incorporation into the display concept.

Condition	Criteria	Alert system characteristics		
		Visual	Aural	Tactile
Warning	Emergency operational or aircraft system conditions that require immediate corrective or compensatory crew action	Master visual (red) plus centrally located alphanumeric readout (red)	Unique attention-getting warning sound plus voice*	Stick shaker (if required)
Caution	Abnormal operational or aircraft system conditions that require immediate crew awareness and require prompt corrective or compensatory crew action	Master visual (amber) plus centrally located alphanumeric readout (amber)	Unique attention-getting caution sound plus voice*	None
Advisory	Operational or aircraft system conditions that require crew awareness and may require crew action	Centrally located alphanumeric readout (unique color)	Unique attention-getting advisory sound	None
Information	Operational or aircraft system conditions that require cockpit indications, but not necessarily as part of the integrated warning system	Discrete indication (green and white)	None	None

*Voice is pilot selectable.

Figure 1.0-1. Guidelines for Standardizing Alerting Functions and Methods

2.0 EXECUTIVE SUMMARY

2.1 Program Background

In August 1981 The Boeing Commercial Airplane Company began a program sponsored by the FAA for the purpose of assisting in the determination of flight deck display requirements and operational procedures for the implementation of the TCAS II system in commercial transport aircraft. After initial meetings which established the overall objectives, ground rules and a schedule of activities, candidate display concepts for the developmental simulation were formulated. Since the collision avoidance situation must be announced to the crew, the work that has been done in crew alerting was used as a basis for selection of display characteristics, format, location and combinations. The resolution advisory was classified as a time-critical alert and treated as such when identifying presentation methods and information contents. Reference material was established and display combinations identified.

The major objectives of the developmental simulation were: to evaluate the alerting effectiveness of the candidate TCAS display system concepts; to evaluate display sophistication with respect to different levels of flight deck sophistication; to determine the viability of including a caution level alert known as a traffic advisory (TA) prior to presenting the resolution advisory (RA): to identify the minimum information requirements for the RA and TA; and to recommend a TCAS display concept to be used in future testing phases.

2.2 Developmental Simulation Testing

The TCAS displays and a rudimentary set of algorithms were implemented in the Visual Flight Simulation Facility. Thirteen qualified transport pilots with an average of 9,100 hours flight experience, participated in the test. Each flew fifteen test flights of thirty-one minutes in length and was presented a total of 225 alerting situations.

To simulate a flight deck environment and work pattern, a realistic aircraft model was used for the basic flying task. In addition, the pilots were required to fly a prescribed flight plan (takeoff, climb, cruise, descent and landings), respond to ATC directives, locate and report traffic in the external visual scene and respond to the alerts.

The variables investigated in the test include:

- Resolution Advisory Display - IVSI plus voice, LED plus voice, or voice alone.

- Traffic Advisory Display - none, TCAS light, CRT tabular without bearing, CRT tabular with bearing, CRT current graphic or CRT advanced graphics.

- Percent of encounters not proceeding to a resolution advisory - 10% or 50%

The results of this test are summarized below and described in detail in Section 4.

Since any collision avoidance warning (RA) can be defined as a time-critical alert, the primary design concerns when considering the display system to be used are the speed and accuracy of the response. The time taken by the pilots to detect an alert or a change in the urgency level of an alert is directly related to the time taken to respond to the alerts. Of the three basic alert combinations, the initial detection of a red light in the primary field of view and a warning sound (siren) was significantly faster than an amber light in the primary field of view and an advisory sound (chime) which was, in turn, significantly faster than a CRT presentation in the secondary field of view and an advisory sound (chime). These findings suggest that the master light in the primary field of view does aid detection but more important is the type of sound used for the master aural. Detecting a change in urgency level is also dependent on the alerting sequence. The resolution advisory (warning) was detected fastest when it was preceded by the caution level TCAS light. This detection time was significantly shorter than the time when there was no caution at all and the time obtained using the CRT for the caution alerts. No measurable difference was found between the latter two conditions.

The performance data indicates that both the preliminary alert (caution) information and the time-critical display have an effect on the response to the resolution advisory (warning). A direct relationship was found between response time and detection time. The longer it took a pilot to detect the resolution advisory the slower the response performance. The type of resolution advisory display used also had an effect on performance. The modified IVSI display combined with a voice alert resulted in the fastest responses and the voice display when used alone resulted in the slowest.

Even though system reliability was not a specific variable in the objective test, when questioned about the implementation of TCAS (see debriefing questionnaire Appendix D) seventy-five percent of the pilots tested felt that the system should be required on aircraft as soon as it can be demonstrated to perform reliably. This opinion was not based solely on the configuration used in testing since seventy-five percent (not necessarily the same pilots as above) of the pilots were familiar with TCAS before participating in the test. This interest in system reliability was expressed in the answers to a number of other questions.

With respect to the major system components, (master alerts, traffic advisories, and resolution advisories) the pilots had the following opinions:

- Master Alerts
  - Both master aural and master visual alerts should be used to get the crew's attention under all conditions.
  - Three levels of tau-based alerts were too many and two levels were recommended, caution (TA) and warning (RA).
- Traffic Advisory
  - All the pilots felt that some form of caution alert was needed
  - Opinion was split between using a TCAS light or a CRT traffic information display for the caution level information (TA).

- After each pilot had used the CRT traffic display in 96 encounters, sixty-seven percent responded to a question concerning its affect on outside visual scan by indicating that pilots with an automated traffic advisory display could become complacent in scanning especially for non-transponder equipped aircraft. Since the test had no intruders without transponders, the basis of this concern lies in the pilots' operational experience and possibly on the newness of the display. However, it does point to an area for further testing.

- If a CRT traffic information display is included as part of the system, it should present the information graphically using color for urgency level. It should display no more than 3 aircraft simultaneously. Traffic presented on the display should include bearing data, horizontal separation (both range and time) and altitude relative to the own aircraft.

o - Resolution Advisory

- Ninety-two percent of the pilots listed corrective guidance alerts (climb/descent) as a necessary portion of TCAS. Since no preventive alerts (don't climb/don't descend) were tested in the simulation, the pilots were less sure that these should be included as a necessary part of the system.

- An arrow was selected as the appropriate method for presenting climb and descend guidance.

- Vertical speed should be included on the resolution advisory display.

- Bars or indexes associated with the vertical speed should be used to impose limits.

- The modified IVSI was the display of choice for the pilots

2.3 Candidate System Description

The final effort of the developmental simulation was the recommendation of a traffic and resolution advisory display combination and component characteristics of the displays for the subsequent phases of the program and flight verification. Because the objective of TCAS displays is to get the crew's attention and provide them with information, the recommended configuration closely followed the guidelines set forth by the FAA for the standardization of crew alerting systems.

Since the TCAS information can be classified as alerts, the displays should perform the functions attributed to the alerting system which are:

- Attract the attention of the crew and direct that attention to the alerting condition so that corrective action can be taken.

- Inform the flight crew of the location and nature of the alerting condition. Sufficient information should be provided to enable the crew to initiate timely, corrective action.

- Provide the crew feedback on the adequacy of their corrective action.

- Provide the crew with a mechanism(s) to control the system to enable them to assess aircraft status quickly, and to identify new alerts.

The need for each of these functions was identified by Cooper (6), Boucek, Erickson, Berson, Hanson, Leffler, and Po-Chedley (8), and in ARP-450D (10). The manner in which these basic functions are implemented will determine the effectiveness of the alerting system. ARP-450D states that "safety of flight is greatly enhanced by an alerting system designed to provide early crew recognition of flight crew operational error, as well as aircraft system or component status or malfunctions". For example, the system should attract the crew's attention to an alerting situation, but should not be so disruptive that it degrades other crew task performance, information processing, or the decision-making required to take corrective actions. The guidelines for designing these basic functions are described in the Aircraft Alerting Systems Standardization Study (2).

To accomplish these functions the following components should be provided:

- o Traffic Advisory

  A unique sound and amber light on the glareshield should be used as a caution level indication.

- o Resolution Advisory

  - A unique warning sound and red light on the glareshield should be used to attract the crew's attention.

  - Visual resolution advisory display providing guidance using arrows for vertical maneuvers and indexes associated with vertical speed for limits.

  - Voice alert with information equivalent to the visual display and continuous until cancelled.

- o Traffic Information Display

  - Before a CRT display can be recommended as a necessary system component, further testing should be conducted with the traffic information display to assess its impact on system operation.

  - Display should provide a color coded (by alert level) graphic presentation of the traffic information including at least bearing, altitude, horizontal separation and vertical direction information.

2.4 Follow-on Verification and Evaluation

Phase II of the study, the Operational Simulation, will implement the concept TCAS II display system in simulation hardware and install it into a motion base cab with full operational capability. The appropriate TCAS software will be implemented to provide fidelity to the alerting situations and to make the findings more generalizable to actual operations.

3.0 TEST FACILITY

The various study requirements dictated the use of a facility in which a flight deck system could be integrated, tested and evaluated in a simulated environment. This facility consists essentially of a generic cab that serves as an "operational breadboard" to facilitate the development of flight deck system concepts, functional capabilities, and interface features. Proposed systems, system changes, and alternative mechanizations can be evaluated and demonstrated in such a facility. It also provides a flexible experimental simulation laboratory that allows for easy introduction of new hardware and change to the flight deck system configuration. System software is modularized to facilitate change; interface equipment is flexible and thus allows for wide varieties of engineering developmental evaluations. These elements have been designed into the Boeing Company Kent Flight Simulation Center. See Figures 3.0-1 for an illustration of these facilities. For more detailed descriptions refer to Appendix A.

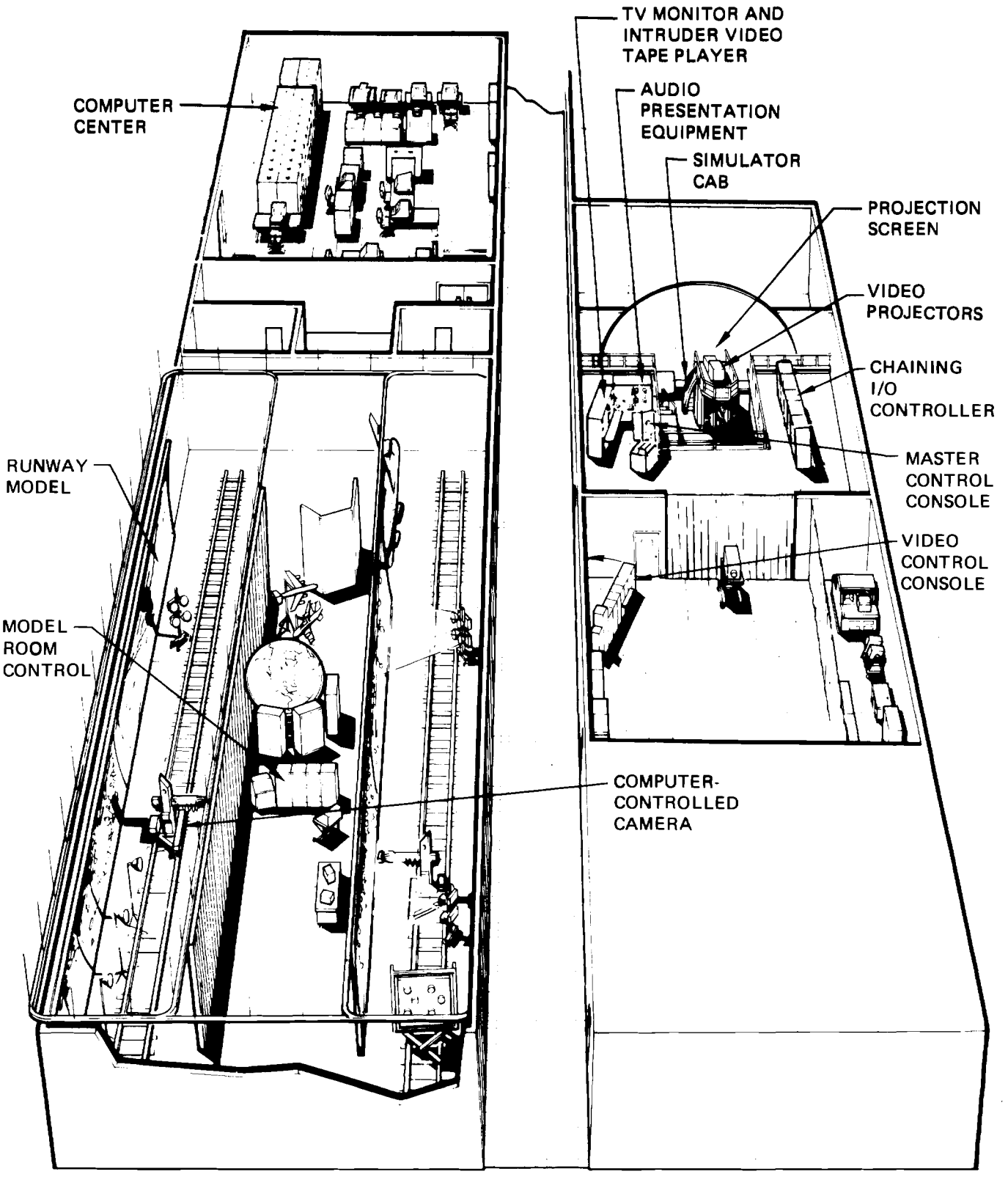

Figure 3.0.1. Kent Visual Flight Simulation Center

4.0 DEVELOPMENTAL SIMULATION - TEST DESCRIPTION AND RESULTS

The primary purpose of the Developmental Simulation testing phase was to evaluate the TCAS information requirements and develop a set of functional recommendations for the necessary displays. The following sections will describe in detail the simulation test performed to achieve these goals and the results obtained.

4.1 Test Objectives

The TCAS developmental test was designed to evaluate information presentation on both the Resolution Advisory (RA) display and the traffic advisory (TA) display and identify minimum information recommendations. The test was designed to examine the following experimental questions concerning the presentation of TCAS information:

1. Does a caution level alert have any effect on the response performance to the resolution advisory?

2. How much information is needed to make a caution level alert effective?

3. Is there any difference in the use of the traffic information display when the alerts are presented graphically or alpha-numerically?

4. Does the response to the resolution advisory change as a function of different display combinations and formats?

5. Does the type of resolution advisory display have an effect on response performance?

6. Can the pilots use the information on the traffic display to anticipate the resolution advisory?

7. Does the certainty of the occurance of a warning have an effect on response or detection performance?

8. Is alert detection affected by display combinations?

9. Do the display combinations have any differential effect on the way a pilot responds to the alert?

10. What information is needed for the resolution advisory?

11. What information would the pilots like to see on the traffic information display?

4.2 Experimental Design

4.2.1 Test Design

The basic experimental design for the developmental simulation was a factorial analyses of variance with repeated measures on at least one of the variables. The design of the test was chosen to evaluate the effectiveness of different combinations of TCAS display types in eliciting an accurate and rapid response from the pilots. The test configuration is presented in Figure 4.2.1-1. There were three independent variables for the test: a) RA display format b) TA display format and c) percent of the encounters which did not proceed to an RA. The RA display variable had three levels: A modified vertical speed indicator combined with voice, an LED presentation combined with voice and a voice presentation without any visuals. The traffic display was presented in six formats: no traffic display at all, an amber TCAS light, a CRT tabular presentation of the range and altitude of the intruder aircraft, a CRT tabular presentation of the range, altitude and bearing of the intruder and two different CRT graphic presentations of the intruder position. Finally, the percent of the encounters which proceeded to an RA was either 90 or 50 percent.

Time and resources did not permit the administration of all 36 treatment combinations to every pilot; therefore, the test was administered as illustrated in Figure 4.2.1-1 in two different factorial designs, a 2 x 6 (percent non-RA encounters x Traffic display format) design with pilots nested within the encounter variable and a 2 x 3 x 4 (percent non-RA display format x TA display format) design, also with pilots nested within the encounter variable and repeated measures on the other variables.

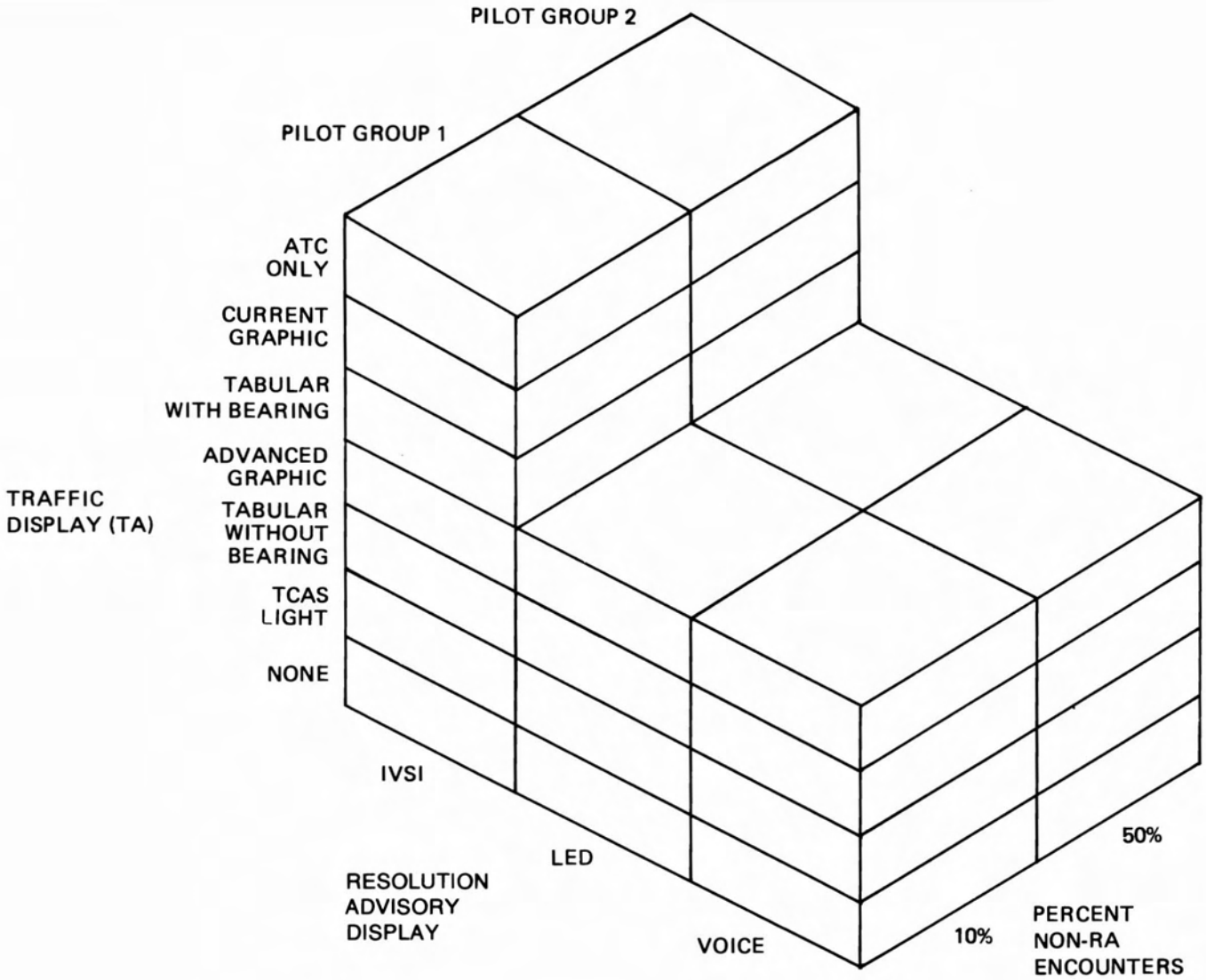

Figure 4.2.1-1. Developmental Simulation Test Design

Figure 4.2.1-2 illustrates the arrangement of the alerting components used in the test. Each display combination tested consisted of three basic components, the master alerts, the traffic alert and the resolution advisory. A split-legend master visual alert was located in the pilot's primary field of vision, on the glareshield. The upper half of the master alert was red and labelled WARNING; the lower half was amber and labelled CAUTION. The master aural alerts were presented over a dedicated speaker located to the pilot's left. The sounds used for the alert levels were consistent with those recommended in the literature (2) and can be described as follows:

WARNING (RA) A sound characterized as a European police siren. This sound consisted of two tones (high 660 Hz and low 330 Hz) which alternated back and forth at a rate of two times a second.

CAUTION (TA) A steady sound consisting of two frequencies, 750 Hz and 500 Hz. The sound was present for 2 seconds and then repeated every 10 seconds until it was cancelled or the alert went away.

ADVISORY (PA) A single stroke chime. A 475 Hz tone was presented with a 50 milliseconds rise and a 1.8 second decay in intensity.

The peak intensity level for the tones were adjusted to approximately 78 dB which was 8 dB above the average ambient noise in the simulator. The signal-to-noise ratio was held constant by an automatic gain control.

The traffic advisories were presented on either an amber TCAS light located on the glareshield or on one of the two CRT's located forward of the throttles. The CRT displays presented the location of the intruder aircraft either in an alphanumeric (tabular) form or a graphic form.

Two displays were used to visually produce the RA alert. A vertical speed indicator which had been modified by adding directional arrows and limit bars (See Figure 4.2.1-3) was located below the altimeter. An LED display which provided directional and limit guidance both graphically and alphanumerically (see Figure 4.2.1-4) was located to the left of the Horizontal Situation Indicator. A voice display was also used to present the RA alerts. The voice

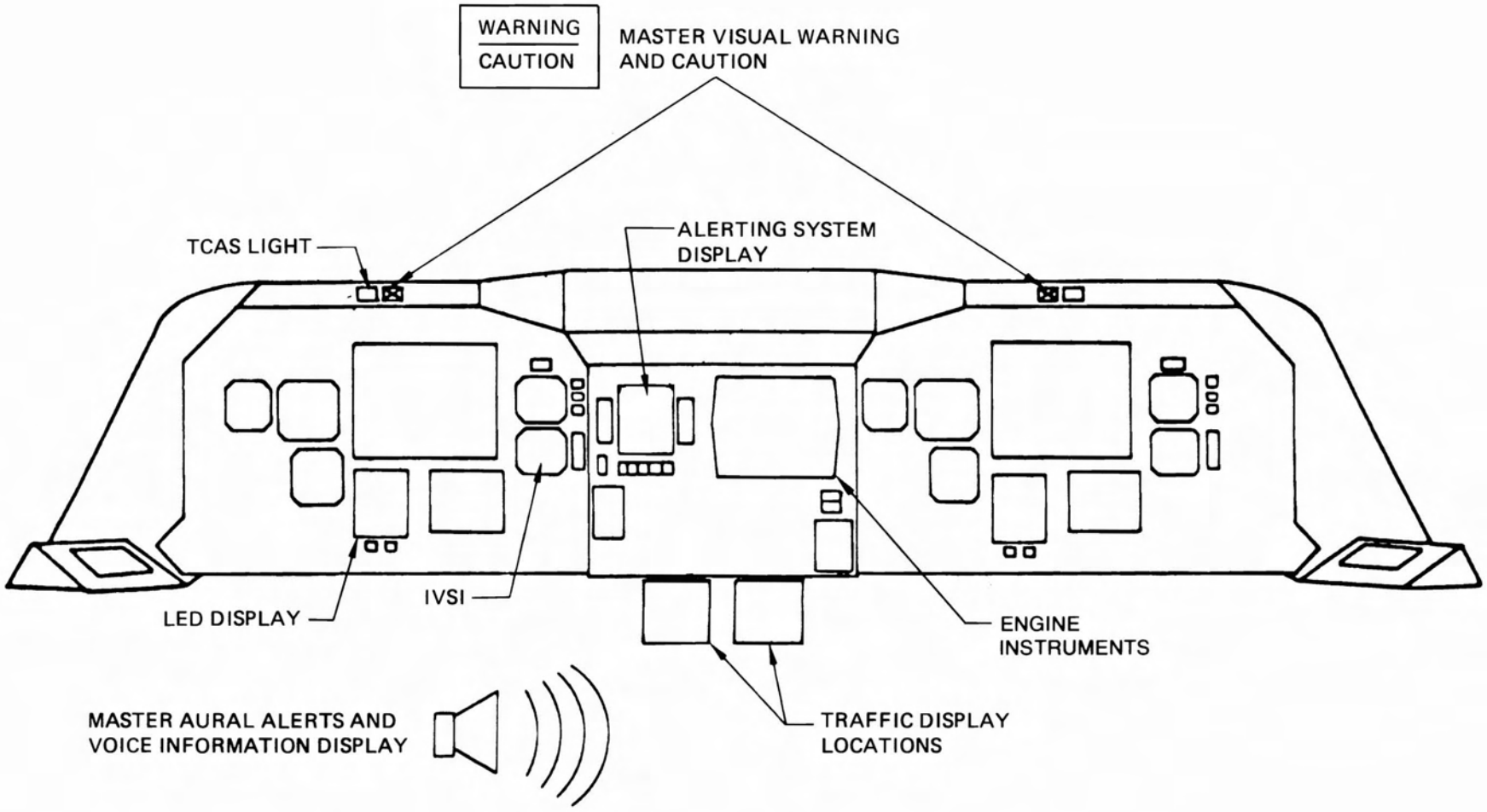

Figure 4.2.1-2. TCAS Alerting System

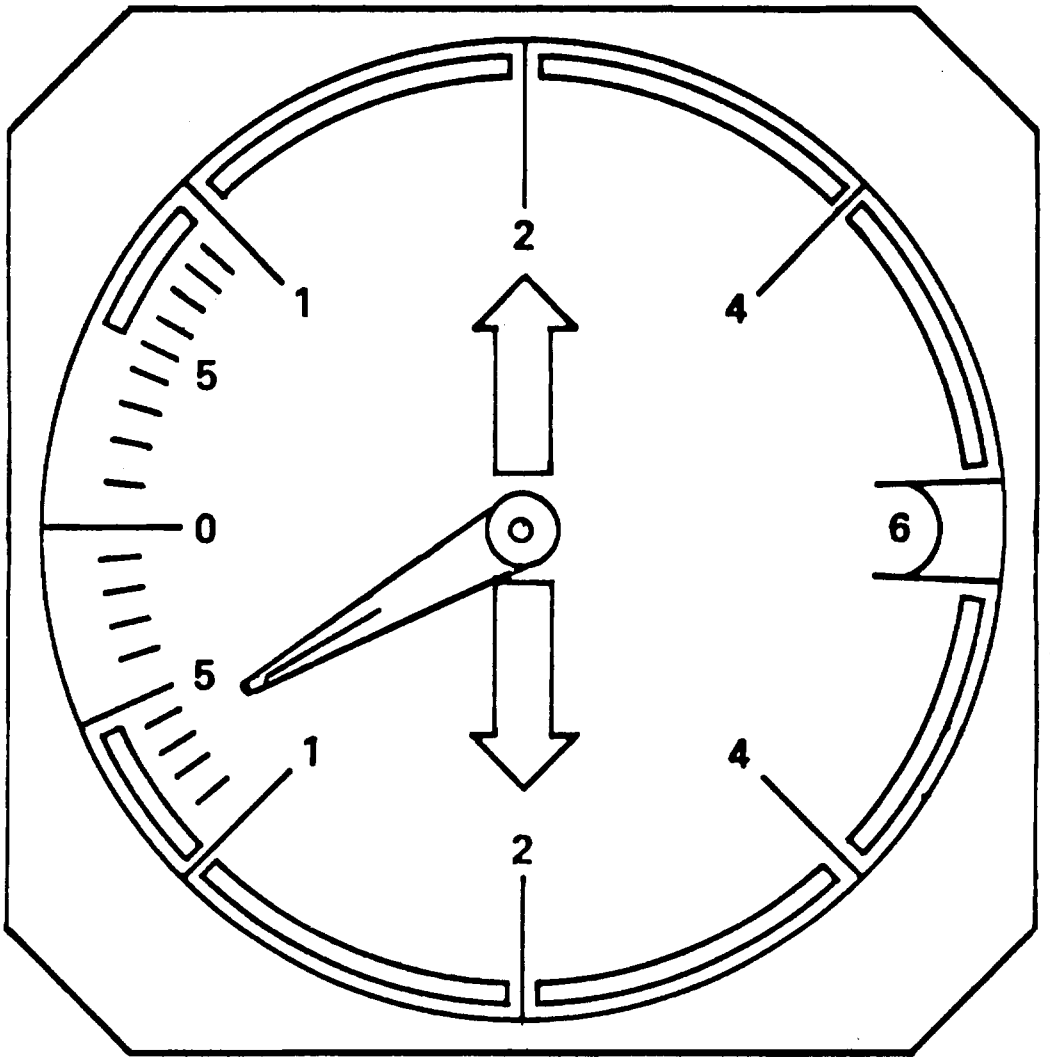

Figure 4.2.1-3. IVSI Command Display for Simulation Tests

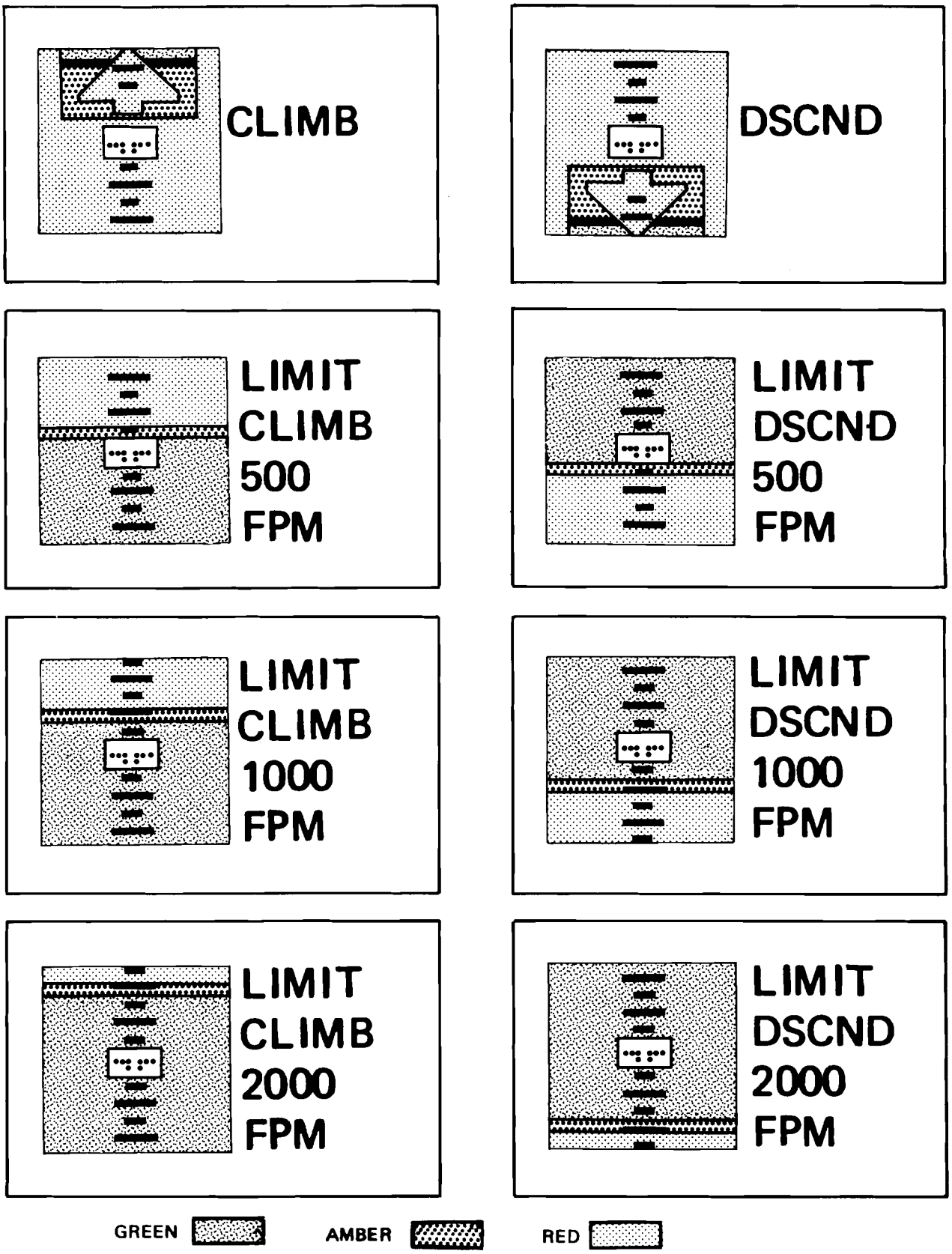

Figure 4.2.1-4. Developmental Simulation LED Display Formats

messages came from the dedicated alerting speaker and were preceded by a 0.75 second presentation of the warning sound. The voice message was repeated until the pilot physically cancelled it or performed the correct maneuver.

Therefore, the sequence of events that occurred for each alerting situation which went to an RA is as follows:

TAU = 45 seconds	PA LEVEL ALERT - Chime sounds and depending on the test conditions either the TCAS light or the CRT is activated with blue coding (no alert is given at the level if it is an RA only trial).
TAU = 35 seconds	TA LEVEL ALERT - C-chord sounds master caution or the TCAS light illuminates if the CRT is being used the information concerning the TA level intruder turns amber (no alert is given at this level if it is an RA only trial).
TAU = 25 seconds	RA LEVEL ALERT - European siren sounds, the red master warning light illuminates, the CRT (if used) information for the RA intruder changes red and the appropriate RA displays activate (depending on the test condition) with the guidance message.

All of the variables were chosen to evaluate the effectiveness of the system in alerting rapid and accurate responses. Therefore, the selection of each variable had as a basis the amount and type of information presented to the pilot about the intruder aircraft and subsequent evasive action. The rationale for selecting the display types, display formats and non-RA encounter variables are described below.

The traffic display served to provide the pilot with a caution level alert which prepared him for the RA. The format of this "lower" level alert is in question. If the alert were simply a "GET READY" for the RA, then a light could serve this purpose. If on the other hand the pilots could use information about the location and approach of the intruder to increase their confidence in the RA or anticipate the direction of the command maneuver then a more complex alert would be appropriate. Therefore, each of the traffic display formats were chosen because they either provided more information or they presented the information differently. The tabular format providing altitude and range (Figure 4.2.1.5) gave the pilot some indication of the intruder flight path but did not pinpoint the location. The addition of bearing information to the tabular format (Figure 4.2.1.6) suppplied more information to the pilot, but that information had to be accurately converted to a spatial representation. The two graphic formats (Figures 4.2.1-7 and -8) presented this information, and also provided at least a plan view of the spatial relationship. Finally, a recorded version of ATC traffic advisories were presented on one flight for each pilot to provide a baseline condition in the test.

The second variable to be investigated was the type of RA display. Three methods of presentation were investigated in which the pilot must receive the alert, understand it, and act on it in a very short period of time. The modified IVSI had the advantage of integrating vertical guidance with the instrument used to display the vertical speed of the aircraft. This instrument was also compatible with currently used instrumentation. Though the display is located in the pilots' primary field of vision (15° from centerline) in the head down position, it is not when the pilot is head up. Also it was felt that the arrangement of lights on the display may cause confusion, especially for those alerts which require a specified climb rate. The LED display presented graphically and alphanumerically all the RA guidance. It was located on the main instrument panel, however, it could be located on the glareshield where it would be in the pilot's primary field vision both head up and head down. Finally, the voice display was not affected by the direction of the pilot's vision.

	RNG	ALT
	1.6	+7
*	0.7	-16
	...	...

Figure 4.2.1-5. Tabular Threat Display—Without Bearing

	CLK	RNG	ALT
	2	1.6	+7
*	10	0.7	-16
	...	...	...

Figure 4.2.1-6. Tabular Threat Display—With Bearing

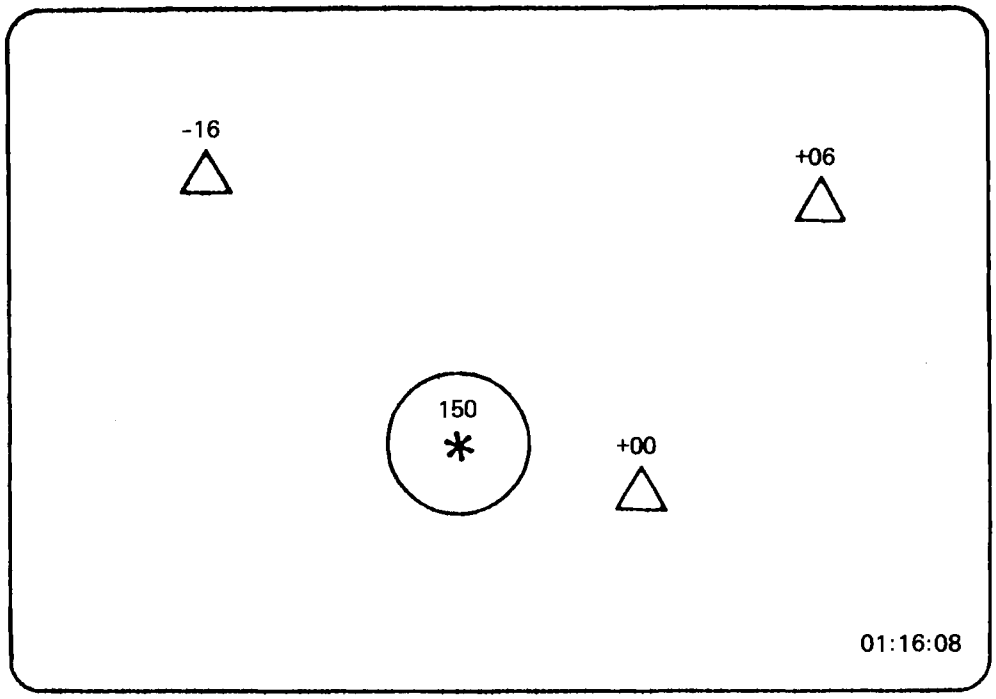

Figure 4.2.1-7. Currently Used Graphic Format

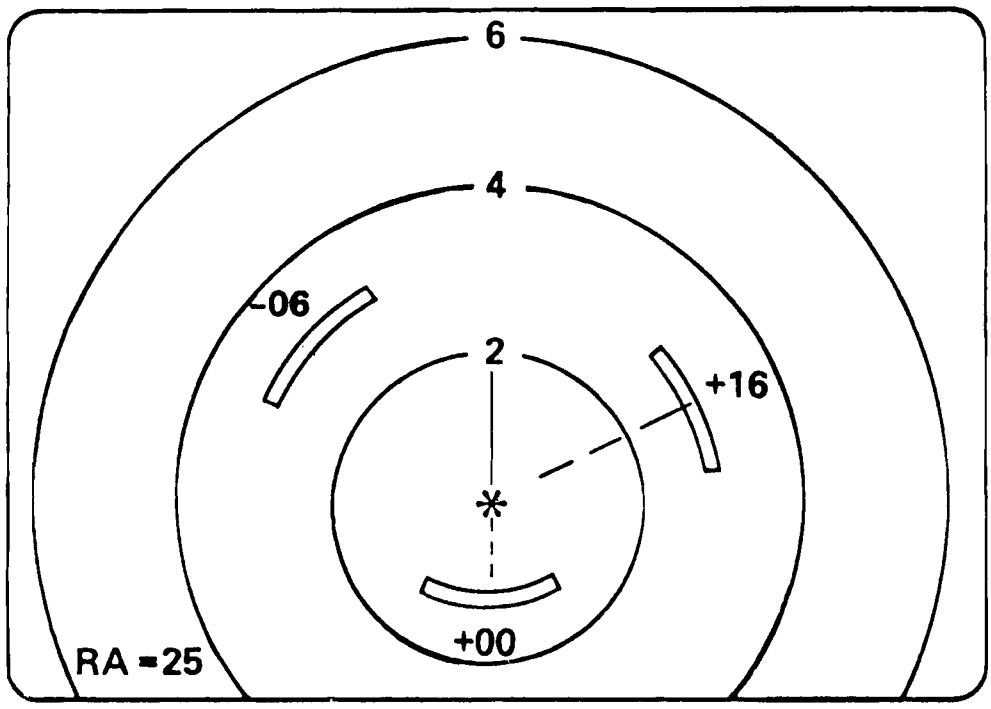

Note: Predictor (dashed line) is broken in three segments representing distances traveled in 10 sec. If the total distance is too short, then a solid line is used.

Figure 4.2.1-8. Advanced Graphic Format

The third variable under consideration was the frequency in which a threat at the caution level (TA) became a warning (RA). In the operational sense it is expected that because of its flight path, an aircraft could trigger a traffic advisory and not an evasive maneuver. The question to be answered was that if this situation occurs often will the pilots respond the same to the resolution advisories when they do occur? To answer the question, the traffic advisories progressing to resolution advisories was tested at either 50 or 90 percent of the time.

4.2.2 Intruder Flight Path

In order to make the TCAS alerting situations realistic and to provide a variety of displayed information, a number of different flight paths were developed for the intruder aircraft. These flight paths can be classified into four general categories (see Figure 4.2.2.1). The first category consisted of intruders flying on an intercept course with a difference in altitude of 500 to 1500 feet either above or below the own aircraft. This category was called altitude offset. The second category, known as longitudinal offset, called for the intruder to fly at the same altitude as the own aircraft on a course that would take it .25 to .50 mile either to the front or to the rear. The third category called for the intruder to be climbing or descending into the own aircraft. This maneuver may or may not be accompanied by either altitude or longitudinal offset. This category was referred to as changing altitude flight paths. Finally, the own aircraft was faced with more than one intruder. The intruders were the same altitude as the own aircraft and on an intercept course. They could be either both at the same angle of arrival or have widely different angles. This category was known as the multiple intruder.

4.2.3 Simulation TCAS Logic

A much simplified set of logic was used to activate the TCAS displays. This was possible because the objective of the test was to study the pilots response to the displays in a systematic manner rather than to test the full TCAS system and provide a definitive work on the operational procedures. Therefore, the intruder aircraft flew canned flight paths which activated the

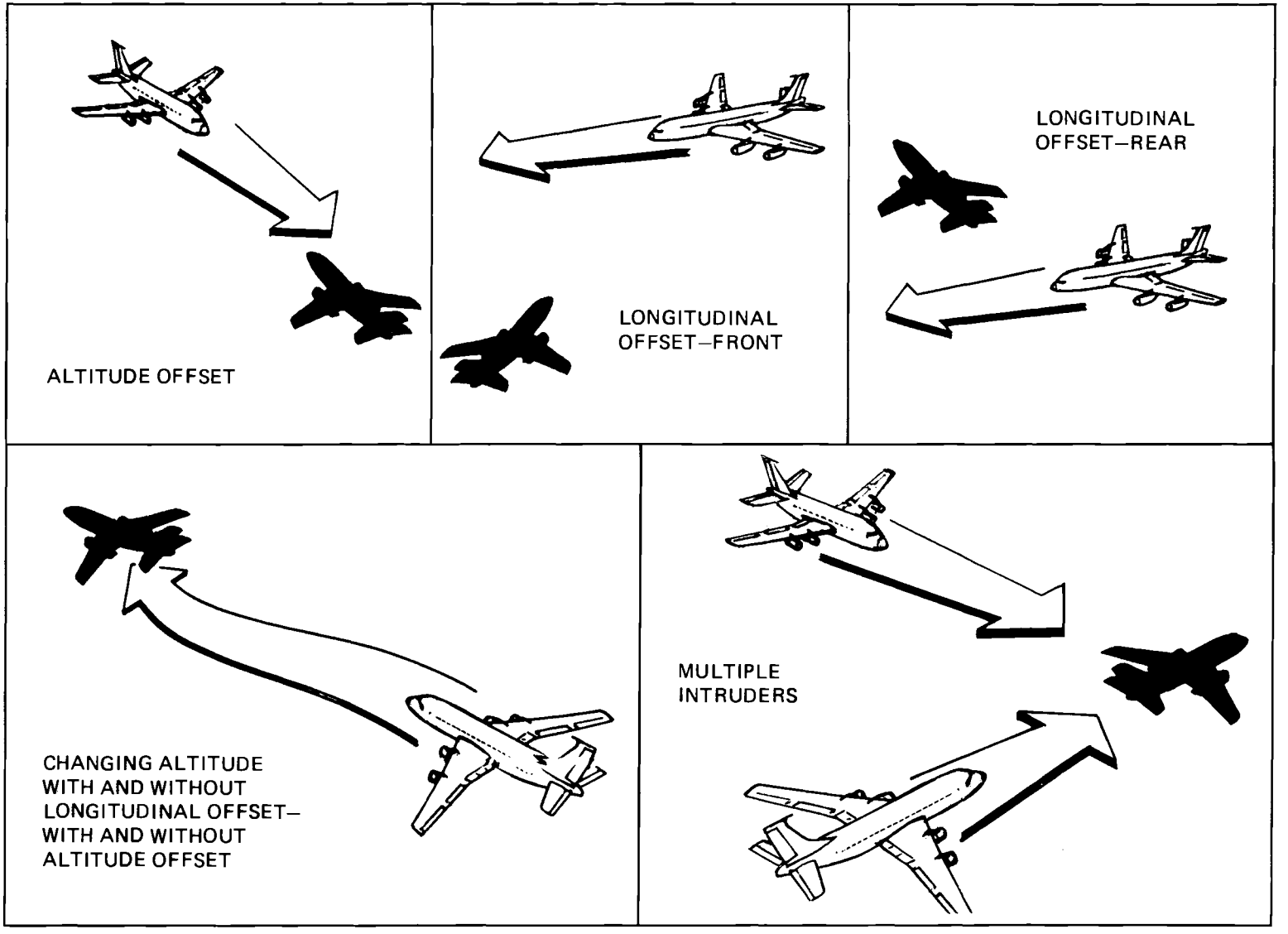

Figure 4.2.2-1. Intrusion Scenarios

displays in the following manner: A proximate advisory (PA) activated when the intruder was 45 seconds from the point of closest approach (also known as TAU). The traffic advisory (TA) or caution alert activated when TAU reached 35 seconds. Finally, the resolution advisory (RA) or warning alert activated when TAU reached 25 seconds. The direction of the RA vertical guidance was always away from the intruder with the smallest TAU value. The vertical rate limits were imposed during flight segments in which the nominal flight path called for a climb or descent profile. The limits were consistent with the expected vertical speed. The correct response to any vertical alert was .25G (8 foot per second squared) vertical maneuver in the appropriate direction. A Change in vertical speed which exceeded the correct response maneuver terminated the alert.

4.3 Pilot Sample

Thirteen pilots with a wide range of experience, including line pilots, instructors, and management pilots, participated in the developmental simulation tests at the Boeing facility. The group consisted of representatives from Boeing, from domestic airlines including American, Republic, United, U. S. Air, and Western, from FAA, and from NASA. A summary of the pilot experience is presented in Table 4.3-1; numerical entries on the right hand side of the table indicate the specific experience by aircraft type and recency of the experience (A is most recent).

4.4 Crew Tasks

4.4.1 Flight Task

To simulate the flight deck environment and work pattern, the pilots performed test flights of 31 minutes duration in the simulator. An aircraft model was used for the basic flying task; the pilots were required to fly a prescribed flight plan, respond to ATC communications, locate targets in an external visual scene and respond to alerts. The flight instrumentation available to the pilots to perform their tasks, shown in Figure 4.4.1-1, consisted of an airspeed indicator; an electronic attitude director indicator (EADI-roll, pitch, glideslope); an altimeter; a rate of climb indicator; a horizontal

Table 4.3-1. Summary of Pilot Experience

Statistic	Pilot experience			Specific aircraft experience									
	Age	TCA's past year	Flight-hours (1,000)	Recency*	707	727	737	747	DC-8	DC-9	DC-10	L-1011	Other
Mean	43.4	190	9.1	A	1	5	2			2			2
Standard deviation	4.5	209	4.2	B		2	3		1	1	1		3
Range	37.0 to 51.0	12 to 600	4.0 to 17.0	C	3	3		1			2		
				D	1		1	1		1		1	

* A is the most recent aircraft flown.

Pilot affiliation			
• FAA	3	• ATA	3
• NASA	1	• ALPA	3
• Boeing	2	• APA	1

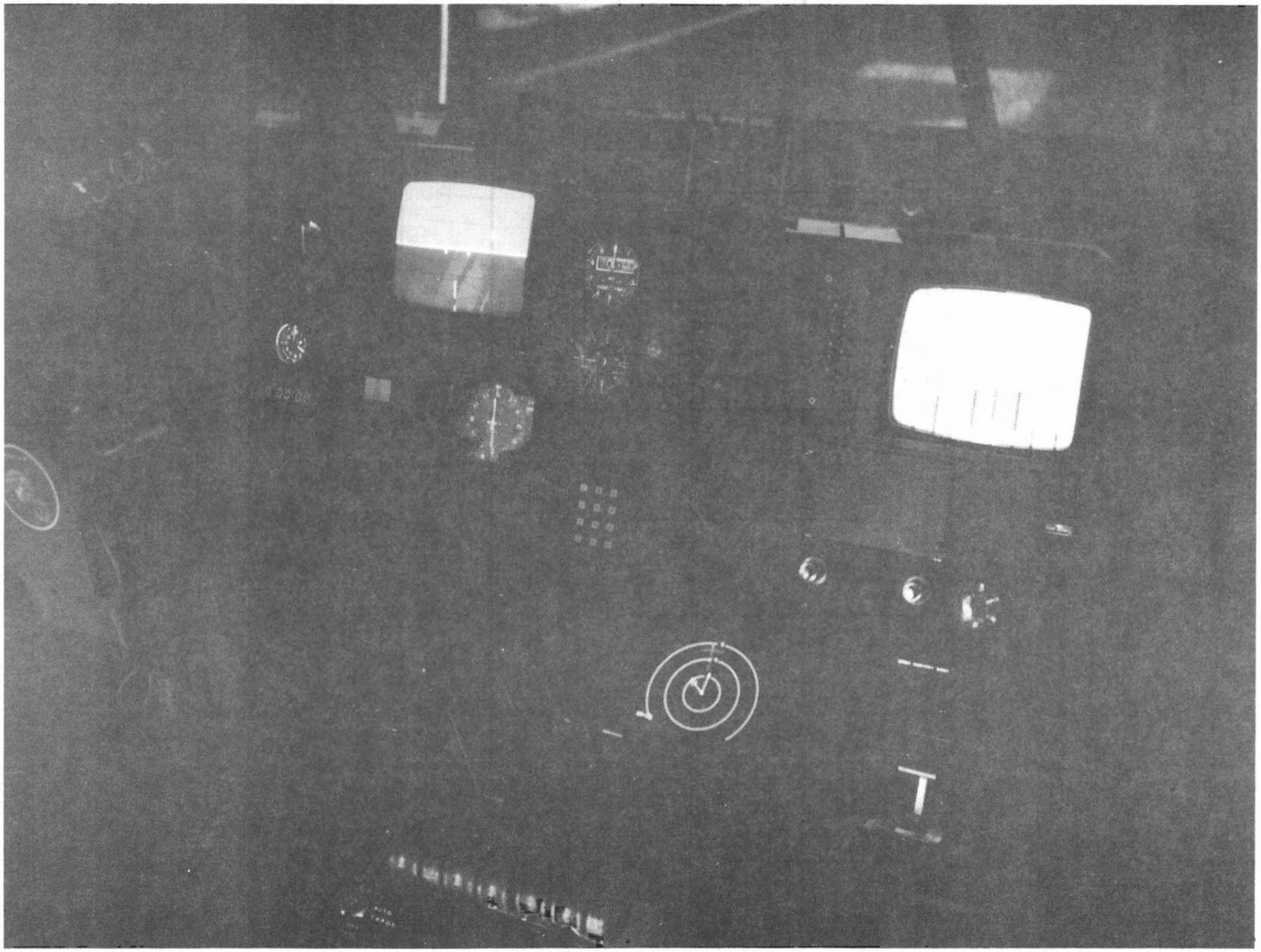

Figure 4.4.1-1. Flight Deck

situation indicator (HSI-course, DME, localizer); the pilot's time-critical display; and a clock to indicate flight time. The center panel contained the visual information display, the electronic engine instrument display, flaps indicator and gear lights.

The flight controls available to the pilot included: wheel and column with trim; rudder and toe brakes; speed brakes; flap handle; gear handle; fire handles; throttle; response key matrix; and a 12 key input panel.

The tests flight plan is illustrated in Figure 4.4.1-2. It was divided into five flight phases: takeoff, climb, cruise, descent and landing. The pilot performed a visual takeoff (Figure 4.4.1-3) on a heading of 360° at a rate of climb resulting from IAS of 210 knots. The outside visual scene disappeared after takeoff. To achieve a more controlled flight path for the flights, the auto throttle was engaged at 2000 feet and flew the prescribed speed profile for the remainder of the flight. The pilot leveled off and held 15000 feet through turns 1, 2 and 3. At a point 10 miles from waypoint D he received an ATC clearance to descend to 10,000 feet. After executing turn 4, ATC cleared the aircraft to 3000 feet. At 9.5 miles he was further cleared for ILS approach and landing. The glideslope raw data box appeared on the EADI. At one mile and 350 feet the visual scene was again presented for landing. The ATC clearances associated with the flight plan are presented in Table 4.4.1-1.

4.4.2 System Alert Response Tasks

When the pilots detected a system alert, they were required to depress a button located on the left side of the control wheel. This action was used to mark the time that the pilot perceived the new alert. After identifying the specific alert, the pilot performed a prescribed response to solve the problem. Table 4.4.2-1 presents the operational or system conditions that were used, along with their associated responses. As can be seen, the responses were divided between two categories, those that were made with operable system elements (e.g., wheel back, cycle gear, etc.) and those that were made through a response panel by depressing the switch corresponding to the system which had a problem (e.g., L SYS HYD PRESR, ANTI-ICE). The response panel had 18 switches located in the center aisle stand, and configured as

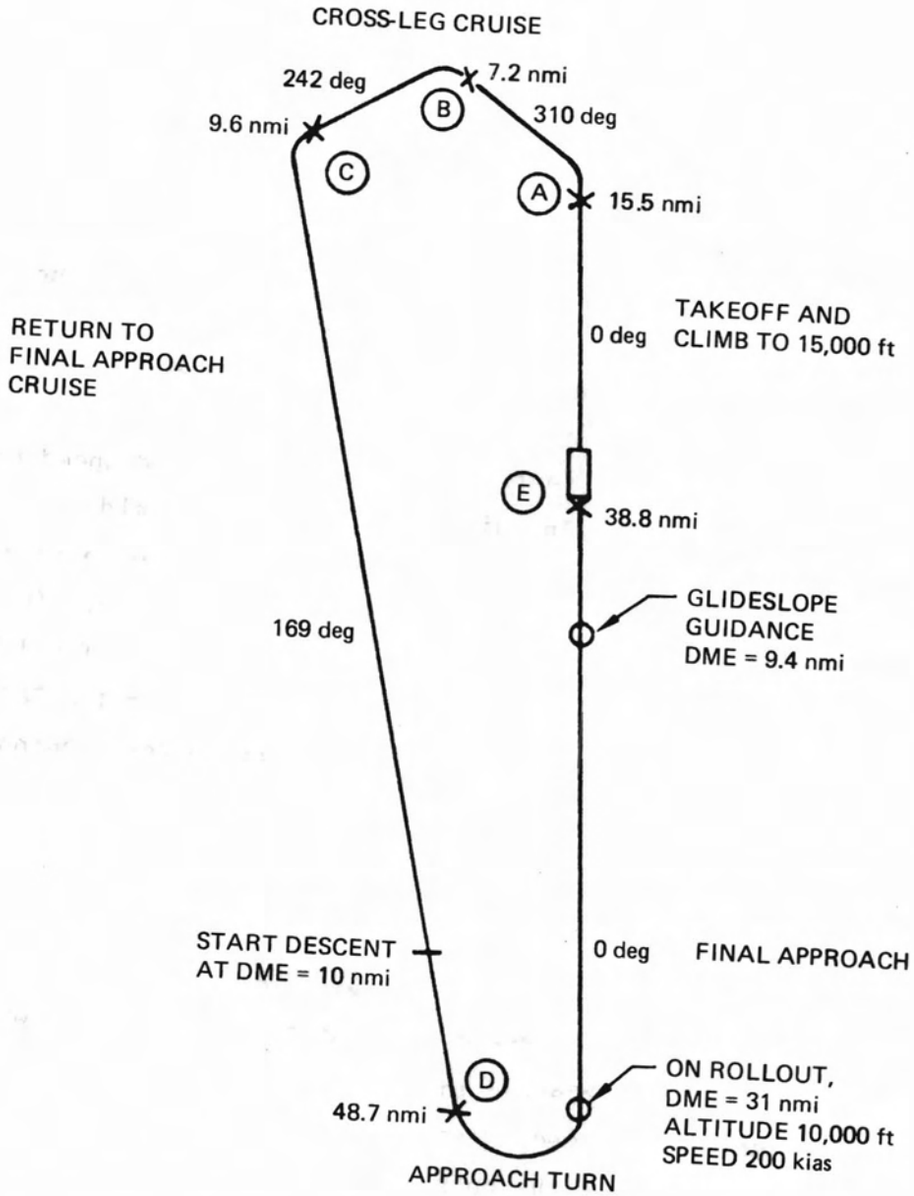

Figure 4.4.1-2. Developmental Simulation Flightpath

Figure 4.4.1-3. Visual Flight Takeoff

Table 4.4.1-1. ATC Communication

	Distance	Altitude	ATC
1	0	0	Boeing 101: Pinevalley Tower: cleared for takeoff runway 36, wind calm altimeter 29.92. Cleared left heading 310 deg at fix ALPHA, Monitor Pinevalley Approach Control 348.2 after takeoff.
2	21.7 nmi	15,000	Boeing 101: Pinevalley Approach Control: fix COCOA, turn left heading 242 maintain 15,000.
3	29.3 nmi	15,000	Boeing 101: Pinevalley Approach Control: fix COCOA, turn left heading 169 maintain 15,000.
4	71 nmi	15,000	Boeing 101: Pinevalley Approach Control: descend to 10,000, cleared penetration and ILS approach runway 36.
5	90.8 nmi	10,000	Boeing 101: Pinevalley Approach Control: have you starting approach, do not descend below 4,000 feet until DME 9.5 nmi, current winds light and variable altimeter 29.92, monitor Pinevalley Tower 253.8.
6	112.3 nmi	4,000	Boeing 101: Pinevalley Tower: cleared to land runway 36.

Table 4.4.2-1. Operational and System Conditions for Alerts and Their Associated Response

Alert	Alert code	CRT message	Urgency level[b]	Pilot's response	Flight engineer's response
Left engine fire	8	L ENG FIRE	W	PULL LEFT FIRE HANDLE	RF FIRE[a]
APU fire	9	APU FIRE	W	PULL CENTER FIRE HANDLE	RP FIRE
Flaps set improperly	10	TAKEOFF FLAPS	W	CYCLE FLAP HANDLE	RP CONFIG
Flaps set improperly	15	LANDING FLAPS	W	CYCLE FLAP HANDLE	RP CONFIG
Right engine failure	11	R ENG FAIL	W	RP ENG STATUS	RP ENG STATUS
Gear not down	12	GEAR NOT DOWN	W	CYCLE GEAR HANDLE	RP GEAR
Overspeed	13	OVERSPEED	W	THROTTLEBACK	RP OVRSPD
Cabin altitude	14	CABIN ALT	W	COLUMN FORWARD	RP CABN ALT
Left generator drive oil	16	GEN DRIVE OIL	C	RP ELEC	DISCONNECT GENERATOR
Gear disagree	17	GEAR DISAGREE	C	RP GEAR	RP GEAR
Right system hydraulic pressure	18	R SYS HYD PRSR	C	RP HYD	CYCLE RIGHT HYDRAULIC SYSTEM
Antiskid inoperative	19	ANTI-SKID INOP	C	RP ANTI-SKID	RP ANTI-SKID
Left air-conditioning pack trip off	20	L PACK TRIP	C	RP ECS	RP ECS
Forward main door open	21	FWD MAIN DOOR	C	RP DOOR	RP DOOR
Right engine oil pressure low	22	R ENG OIL PRSR	C	RP ENG STATUS	RP ENG STATUS
Anti-ice inoperative	23	ANTI-ICE	C	RP ANTI-ICE	RP ANTI-ICE
Autospoiler inoperative	24	AUTO-SPOILER	C	RP AUTO-SPLR	–
Altitude alert	25	ALTITUDE	C	RP ALT	RP ALT ALRT
Left bleed off	26	L BLEED OFF	A	RP ECS	RP ECS
Galley bus off	27	GLY BUS OFF	A	RP ELEC	CYCLE SWITCH
Utility bus off	28	UTIL BUS OFF	A	RP ELEC	CYCLE SWITCH
Right engine hydraulic pump	29	R ENG HYD PUMP	A	RP HYD	CYCLE SWITCH
Left engine fire detector	30	L ENG FIRE DET	A	RP FIRE	RP FIRE
Left brake overheat	31	L BRAKE OVHT	A	RP BRK	RP BRK
Right forward fuel pump	32	R FWD FUEL PUMP	A	RP FUEL	CYCLE SWITCH
Forward cabin call	33	FWD CABIN CALL	A	RP CABN CALL	RP CABN CALL
SELCAL	34	SELCAL	A	RP SELCAL	RP SELCAL

[a] RP = response panel

[b] W = warning C = caution A = advisory

Table 4.4.2-1. Operational and System Conditions for Alerts and Their Associated Responses (Concluded)

Alert	Alert code	CRT message	Urgency level	Pilot's response	Flight Engineer's response
Upper yaw damper failure	35	UPPER YD FAIL	C	RP FLT CONTRL	RP FLT CONTRL
Leading edge flaps	36	LE FLAPS	C	RP FLT CONTRL	RP FLT CONTRL
Air-conditioning pressure	37	AIRCOND/PRSR	C	RP ECS	RP ECS
Left generator off	38	L GEN OFF	A	RP ELEC	CYCLE SWITCH
Left bus tie	39	L BUS TIE	A	RP ELEC	CYCLE SWITCH
Right electric hydraulic pump	41	R ELEC HYDPUMP	A	RP HYD	CYCLE SWITCH
Autothrottle disconnect	43	A/T DISC	C	RP A/T	RP A/T

seen in Figure 4.4.2-1. Caution and advisory level alerts were always responded to through this panel. When the pilot made the correct response, the alert message was removed from the screen, the master visual alert was extinguished and the aural alerts were silenced.

4.4.3 TCAS Alert Response Task

When the pilots detected a TCAS alert they responded by pressing the button on the left hand side of the control wheel. This action marked when the alerts were detected. They were also required to respond with this button each time the alert changed urgency levels, i.e., advisory to caution or caution to warning. For those encounters in which the intruder aircraft was visible, the pilot was also asked to push the right hand button when he had identified the aircraft. After the alert had proceeded to the resolution advisory alert the pilot performed the maneuver that was displayed. They were instructed to achieve approximately a .25G climb or descent to an excursion of 1000 feet per minute on the IVSI. When the pilot made the correct response (i.e., aircraft achieved .25G vertical acceleration in the correct direction), the alert was discontinued. A second type of resolution advisory was also possible. This alert type called for the pilots to limit a vertical maneuver that they were already performing. Examples of the two types of alerts are presented in Figure 4.4.3-1.

4.5 Test Procedures

The variables tested in the developmental simulation are described in section 4.2.1. All variables not tested were held constant or controlled to avoid biasing or confounding the results. Simulated aircraft ambient noise with an average intensity of approximately 70 dB was presented during the flight task to mask the uncontrolled noise that may have been occurring around the cab. The ambient noise was controlled by throttle position and airspeed to provide a realistic sound spectrum based on aircraft performance. During each flight, variations of the noise level were kept within the range of 67dB and 72dB. The ambient light levels were kept very low (5 ft-L) to permit the use of the outside visual scene. ATC communications were presented at 75dB and held constant for all trails; visual message contrast was also held constant for all trials. All pilots received the same instructions to minimize experimenter bias (see Appendix B).

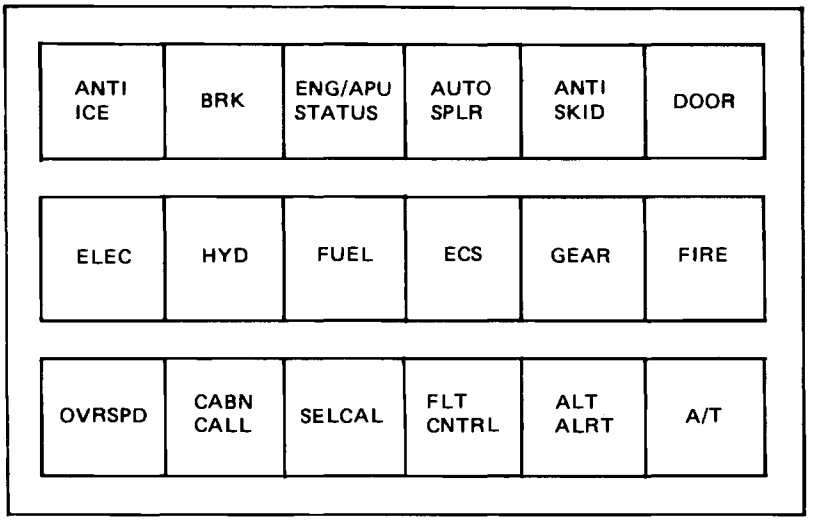

Figure 4.4.2-1. Pilot's Response Panel

VERTICAL COMMANDS

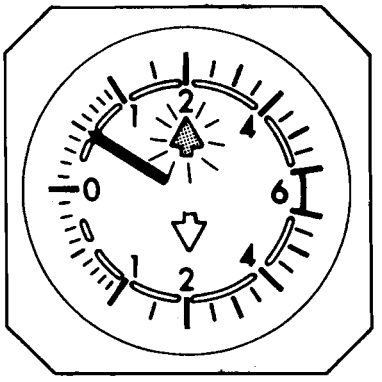

*CLIMB
DESCEND

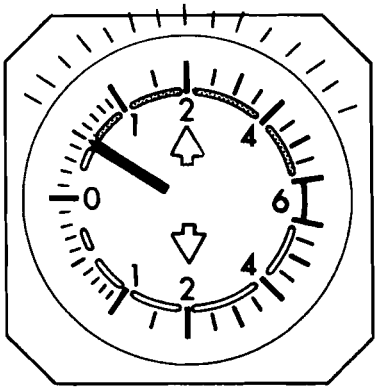

*Limit climb to 500 ft/min
Limit climb to 1,000 ft/min
Limit climb to 2,000 ft/min
Limit descent to 500 ft/min
Limit descent to 1,000 ft/min
Limit descent to 2,000 ft/min

*Displayed alert.

Figure 4.4.3-1. TCAS Resolution Advisory Alerts and Example IVSI Presentation

Each test flight was 31 minutes in length and contained 15 alerts: twelve TCAS intrusions and three system alerts. This number of alerts is not indicative of the number expected in actual system operation. A larger than expected number of alerts were chosen for the simple reason that to obtain a sufficient amount of data with realistic time periods between the resolution advisories would have required testing time far in excess of the scope for the study. The effect on the data of using a higher rate of alert occurences was to reduce somewhat the surprise and uncertainty factors, thus making the response and detection times shorter than would be expected in actual operation. These times were also affected by the fact that the pilots knew that it was a TCAS test and were expecting the alerts. Therefore, the times obtained for the test cannot be directly applied to operational situations. This does not, however, mean that the data cannot be used. Since all display combinations were used with the same number of alerts, the relative differences in time between these combinations do give an indication of the information transfer occurring with the displays. This kind of result meets the objectives of the test. Therefore the number of alerts combined with a relatively high workload to keep the pilots involved in flying do provide appropriate information in a cost effective manner. The alerts were presented on a schedule of two minute intervals; however, to help prevent the pilot's anticipation of the alerts, a 45 second interval around each two minute mark was allocated for the alerts. The alerts could therefore be presented as close together as 30 seconds. The times were chosen at random, and 12 different time scenarios were developed. The only restriction on the time selection was that no alert could occur after 30 minutes into the flight to permit the pilot at least 60 seconds to respond to the last alert. To reduce the possibility of influencing the data by the order in which the alerts were presented, 12 random alert orderings were developed and combined at random with the time scenarios to produce the test scenarios.

Whenever task performance is measured under several different treatment conditions over an extended period of time, learning or fatigue may affect performance on later trials. Care was taken to design an appropriate counterbalancing scheme to prevent carry-over effects from differentially affecting the performance measures for the different treatment conditions. It should be noted, therefore, that the order in which the pilot received the

experimental treatments was also randomly assigned to prevent order bias from confounding the results (see Table 4.5-1). Immediately prior to each flight the pilot was briefed on the alerting system configuration that he would be using.

The daily test schedule for the developmental simulation tests is presented in Table 4.5-2; all pilots were to fly only one non-encounter condition. Two pilots were tested each week spending two days per pilot in the simulation.

The test participation began with an introduction to the Visual Flight Simulation Facility and a review of the program. The pilots were briefed on the flight plan and given the nominal flight path parameters (see Figure 4.4.1.2). They were encouraged to take notes on their briefing sheet and to use them during flight. Following the briefing, the pilots entered the cab for instruction on the operational characteristics of the simulator and the test flight tasks (see Appendix B for the briefing checklist).

The pilots were informed of the basic tasks to be carried out during each flight. The first involved flying the simulator from take-off to landing on the specified flight plan. The second was responding to the alerts which was done by performing the prescribed actions associated with each alert.

Before participating in the data collection flights, each pilot made a series of practice flights. The purpose of these flights was twofold - to acquaint the pilots with the flight characteristics and dynamics of the simulation airplane model and the flight plan; and to become proficient at performing the correct alert responses. The first practice flight was 31 minutes in which the complete flight pattern was flown. There were no alerts to distract the pilots during most of this flight. The instructions on how to respond to the alerts were explained during the practice flight, and any questions the pilot had were answered. The second practice flight included a short segment after take-off in which TCAS alerts were presented in order to familiarize the pilots with the correct TCAS responses. Then the alerts were repeated and the pilots were asked to respond to them by performing the corrective action. The time for training was two and one half hours.

Table 4.5-1. Random Treatment Assignments

Command display			ATC	IVSI						LED				Voice			
	Subject number	Threat display	ATC	None	Light	Tab 1	Tab 2	Graphic 1	Graphic 2	None	Light	Tab 1	Graphic 2	None	Light	Tab 1	Graphic 2
		Flight number	1	2	3	4	5	6	7	8	9	10	11	12	13	14	15
10% Non-RA encounters	1		15	11	9	8	12	6	14	4	3	7	10	2	5	1	13
	4		1	7	11	13	6	10	12	15	2	8	9	14	4	3	5
	5		7	14	4	12	1	13	3	10	11	5	15	6	9	2	8
	7		10	12	13	2	9	5	6	7	14	4	1	8	15	11	3
	10		8	1	5	4	14	7	9	12	6	15	2	3	10	13	11
	12		13	3	11	15	8	9	5	1	12	2	14	7	6	10	4
50% Non-RA encounters	2		12	15	10	5	7	1	8	14	4	3	6	13	11	9	2
	3		6	10	14	1	11	8	13	2	5	9	4	12	3	7	15
	6		5	2	3	11	15	4	10	9	13	12	8	1	7	14	6
	8		2	6	7	10	5	15	4	3	1	14	12	11	13	8	9
	9		14	9	8	3	13	2	11	6	15	10	5	4	1	12	7
	11		4	8	15	6	3	12	2	13	9	1	7	10	11	5	14

Table 4.5-2. Daily Test Schedule

Day 1	
000 - 1:00	Cab warmup and preflight
0:30 - 2:30	Pilot training
2:30 - 4:30	Flights 1 through 3
4:30 - 5:15	Lunch
5:15 - 6:30	Flights 4 and 5
6:30 - 6:45	Break
6:45 - 8:00	Flights 6 and 7

Day 2	
000 - 1:00	Cab warmup and preflight
1:00 - 3:00	Flights 8 through 10
3:00 - 3:15	Break
3:15 - 5:15	Flights 11 through 13
5:15 - 6:00	Lunch
6:00 - 7:15	Flights 14 and 15
7:15 - 8:00	Pilot debriefing

The test day consisted of eight flights with approximately four hours of flying. Brief rest periods were taken throughout the day in an effort to reduce fatigue. After each test flight in which a new display was introduced the pilots were given a short questionnaire (see Appendix C) to evaluate the display. Upon completing the data collection flights the pilots participated in a short debriefing session. Their impressions of the TCAS concepts and the application of these concepts were solicited. The formal debriefings included an informal discussion between the pilots and experimenter and relevant pilot comments were recorded for further evaluation. The pilots were then given an extensive questionnaire which they were to complete and return at a later date. (See Appendix D).

4.6 Measurement Technique

4.6.1 Performance Measures

The performance measures used in the tests fell into two categories - those associated with the flight task and those associated with the alert response tasks. The parameters that reflect how well the pilot performed the flight task included altitude deviations, wheel and column reversals, landing performance, accuracy of detection of the outside visual targets. The parameters were especially important for the time period immediately around the alerts because they provide a measure of the efficiency and effectiveness of the pilot in performing the flight maneuver. A second set of dependent variables,used to quantify the responses to the alerting system, included the time and accuracy of alert detection, and the time and accuracy of the response to the alert.

4.6.2 Subjective Measures

Finally, subjective data expressing the pilot's opinions about the various alerting system characteristics were gathered for all test configurations. The pilots were asked to comment on and rate the effectiveness of the candidate TCAS displays, clarity of the message, format and system components.

Questionnaires were administered immediately after each flight in which a new display was introduced so that the pilots could establish their reaction to the display while it was still fresh in their minds. These questionnaires were very brief and directed specifically toward a display used in the preceding flight.

After completing the entry test sequence the pilots participated in a debriefing which permitted them to provide inputs after experiencing all configurations. This debriefing consisted of an informal interview after the last flight and an extensive questionnaire (See Appendix D) which the pilots were asked to take with them, complete and return at a later date. The debriefing questionnaire was in two sections: the first directed toward biographical and experimental data; and the second section was directed toward the pilot's opinion about collision avoidance systems in general and the test display configurations specifically.

A number of different types of questions were asked in the second section to provide the pilots with the maximum flexibility for expressing their opinion. The first type of question used was the rating scale in which a question was asked and the pilot was given a scale with which to answer. An example of the type of questions would be:

How useful is including the vertical speed on the resolution advisory display?

Extremely Useful	Useful	Of No Use	Detrimental	Extremely Detrimental
___	___	___	___	___

The second type of question was the forced choice question in which the pilot was asked to select the best of a number of alternatives. For example:

In what intervals should the altitude information be given?

a. One foot ___
b. Ten foot ___
c. Hundred foot ___
d. Thousand foot ___

The third type of question was rank ordering in which the pilots were given a list of alternatives and asked to rank them from best to worst. The fourth type of question was the open-ended pilot opinion in which the pilot is asked the questions and then given space to provide his answer. For example:

What information should a collision avoidance system provide?

This type of question provides for a written structured interview.

The next technique is called semantic differentiation which was used to develop opinion profiles. The semantic differential provides a means to judge opinion in a systematic way. The scale was developed by using a series of polar adjectives and requiring the pilots to indicate where their opinion falls between the ends of the scale. An example of this type of question would be:

Suppose the pilot is asked to judge one of the TCAS display options on the following scale:

Good								Bad

If he feels that the display is very good he would check the box nearest that adjective. An opposite reaction would result in a check at the other end of the scale and a neutral opinion would result in the center box being marked.

Finally the pilots were asked to design their ideal system including necessary components, information requirements and the format of the displays. They were asked to relate the system to both a conventional and advanced flight deck design.

4.7 Data Reduction and Analyses

The data obtained in the Developmental Simulation testing falls into two general categories - objective (or performance) data and subjective (questionnaire/debriefing) data. A time-based tabulation of all events that occurred in the cab, switch and light states, displayed messages and fault situation initiation, was generated from the data. From this tabulation, sums, means and standard deviations were calculated for all performance variables. The performance was analyzed with respect to all the alerts and was also partitioned from the various alert categories. Analyses of variance were performed on the reduced data to determine if the various treatment conditions had a differential affect upon performance. The statistical model used for the data reduction was the analyses of variance. As described in Section 4.2, two separate analyses were performed both of which were mixed designs. All of the pilots had treatment conditions associated with a portion of the variables but one variable (percent no-RA encounters) divided the pilots into two groups. The model and source table for this type of analyses is presented in Table 4.7-1.

Since developmental testing requires that system developers be very sure before they reject any candidate system concept, and since the time critical tests were exploratory in nature, an error probability of .10 was selected as a test for significance for the statistical tests performed on both experiments.

4.7.1 Experimental Hypothesis

The following were the hypotheses upon which the tests were based:

1. Pilot detection time is not affected by the type of alert (i.e. warning versus advisory).

Table 4.7-1. Sample of Analysis of Variance Model and Summary Table for a Factorial Experiment With Repeated Measures on Some of the Factors

Model		
$X_{ikj} = \mu + \sigma_i + \gamma_{k(i)} + \beta_j + \sigma\beta_{ij} + \beta\gamma_{jk(i)} + \epsilon_{k(ij)}$		
Summary table		
Source	Expected mean square	F ratio
A	$\sigma_e^2 + ba\,\sigma_s^2 + nb\,\sigma_A^2$	MS_A/MS_{sub}
Subject within A	$\sigma_e^2 + ba\,\sigma_s^2$	
B	$\sigma_e^2 + a\,\sigma_{Bs}^2 + na\,\sigma_B^2$	MS_B/MS_{Bs}
A x B	$\sigma_e^2 + a\,\sigma_{Bs}^2 + n\,\sigma_{AB}^2$	MS_{AB}/MS_{Bs}
B x subjects within A	$\sigma_e^2 + a\,\sigma_{Bs}^2$	

Note: The example is a two-factor experiment with repeated measures on one factor.

2. The presence or absence of the traffic alert will not have an effect on the detection of the resolution advisory.

3. The type of traffic advisory presented will not affect the initial detection time of the alert.

4. The percent of none-RA encounters will have no effect on detection time.

5. ATC traffic advisories will be detected just as fast as any internal alert.

6. The location of the traffic advisory visual alert has no effect on detection performance.

7. The type of traffic advisory has no effect on the pilots response performance.

8. The presence or absence of a traffic alert has no effect on response performance.

9. Voice presentation of the resolution advisory is just as effective as voice combined with visual in producing the correct response.

10. The IVSI and LED resolution advisory displays are equally as effective as measured by response performance.

11. The percent non-RA encounters will have no effect on response performance.

12. Altitude change during the response will not be related to any of the test variables.

13. The accuracy of the pilots' response will not be related to any of the test variables.

4.8 Test Results

Although some of the results reported in the following sections as being statistically significant may appear to be of insufficient magnitude to be of practical importance, this may be a false assessment of the results due to the nature of the tests. It must be kept in mind that the pilots knew alerts were going to occur during the flight, and the anticipation of the alert resulted in a response that was faster than would normally occur. The speed that a pilot can respond to an alert is a function of certain physical factors such as recognition and reaction times. As a pilot responds faster he approaches these physical limits. As these limits are approached it is found that the response times tend to group or stack up at the low end of the scale. This factor has the effect of reducing the spread of response time scores. Another example of this type of effect can be seen in a simple physical experiment of throwing a ball. Imagine 100 people throwing a ball as far as they can. Each person's score would be the distance their ball traveled. For the first throw there is a spread of scores from say 50 to 190 ft. and the distribution of scores was bell shaped with the most scores occurring at 120 ft. Now for the second throw a large wall is built at 100 ft. All those people who can't throw further than 100 ft. will throw just like they did at first. However, the rest of the people will hit the wall and it will look in their scores like they can only throw 100 ft. This will reduce the spread of the scores thus reducing the variability of the results. In the actual TCAS operation, it is expected that the pilots will not be anticipating the alerts and therefore the overall response times will be slower getting them away from the "wall" of the physical parameters and permitting a wider range of times. This would have the effect of increasing the observed size of any real differences that exist between the experimental treatments (14, 15, 16).

4.8.1 Detection Times

Detection time has been defined as the time from the initiation of the alert to when the pilot first noticed that either an alert had occurred or any existing alert had changed urgency level. These two detection times actually have different meanings in the alerting paradigm. The initial detection is a measure of the attention getting quality of the alert. Alert change detection, on the other hand, reveals how well the alert is transmitting urgency information and could possibly provide a measure of complexity.

The analysis of variance summary tables for the initial detection time is presented in Table 4.8.1-1. The main effect attributed to the alert display was signficant (F=15.99 df 6,60) and can be seen in Figure 4.8.1-1. Using Duncan's New Multiple Range test it was discovered that the CRT display and sound (4.84 seconds to 5.25 seconds) were detected significantly slower than either the TCAS light and advisory sound (4.20 seconds) or the resolution advisory with no caution alerts (2.50 seconds). Looking at the detections for each level of urgency the proximate advisory (PA) is detected signficantly slower (as expected) than either the traffic alert (TA) or the resolution advisory (RA) for all the display types (F=55.8 df 2,12). As can be in Figure 4.8.1-2 using the TCAS light as the caution alert resulted in the shortest detection time (1.46 sec) for the RA. This time was signficantly shorter than either the 2.52 seconds for the RA without cautions (t=8.1 df 22) or the 2.15 seconds when using the CRT as a for caution alerts (t=1.9 df 22). The detection of the ATC traffic advisory is comparable to using the advisory sound and CRT. Finally, the percent of encounters that progressed to an RA had no effect either on the detection of the initial alert or on the detection of the RA. Nor were there any interactive effects between the alert type and the percent of non-RA encounters.

4.8.2 Response Times

The analysis of various summary tables for the response times is presented in Table 4.8.2-1. The mean effect attributed to the traffic display was significant (F=2.34 df 3,30) with the mean response time for the RA which was preceded by the TCAS light (3.49 seconds) being significantly shorter than for those conditions with either no precursors (4.57 seconds) or when the CRT was used as a precursor (4.6 seconds to 4.38 seconds). This result may be misleading, however, due to the composition of the response time. Each response had two components, the time to detect the alert and the time to respond. As can be seen in Figure 4.8.2-1 the significant differences found in the response time is due solely to the differences in the RA detection times. When the component is factored out, there are no measurable differences in the response times among the treatment conditions.

Table 4.8.1-1. ANOVA Summary Table for Initial Detection Time

Source	Sum of squares	Degrees of freedom	Mean square	F	Probability F exceeded
Mean	1,930.05	1	1,930.05	457.05	0.0
Non-RA (N)	5.11	1	5.11	1.21	0.2
Error	42.22	10	4.22		
Alert display (A)	80.84	6	13.47		
AN	2.30	6	0.38	15.98	0.0
Error	50.55	60	0.84	0.45	0.8

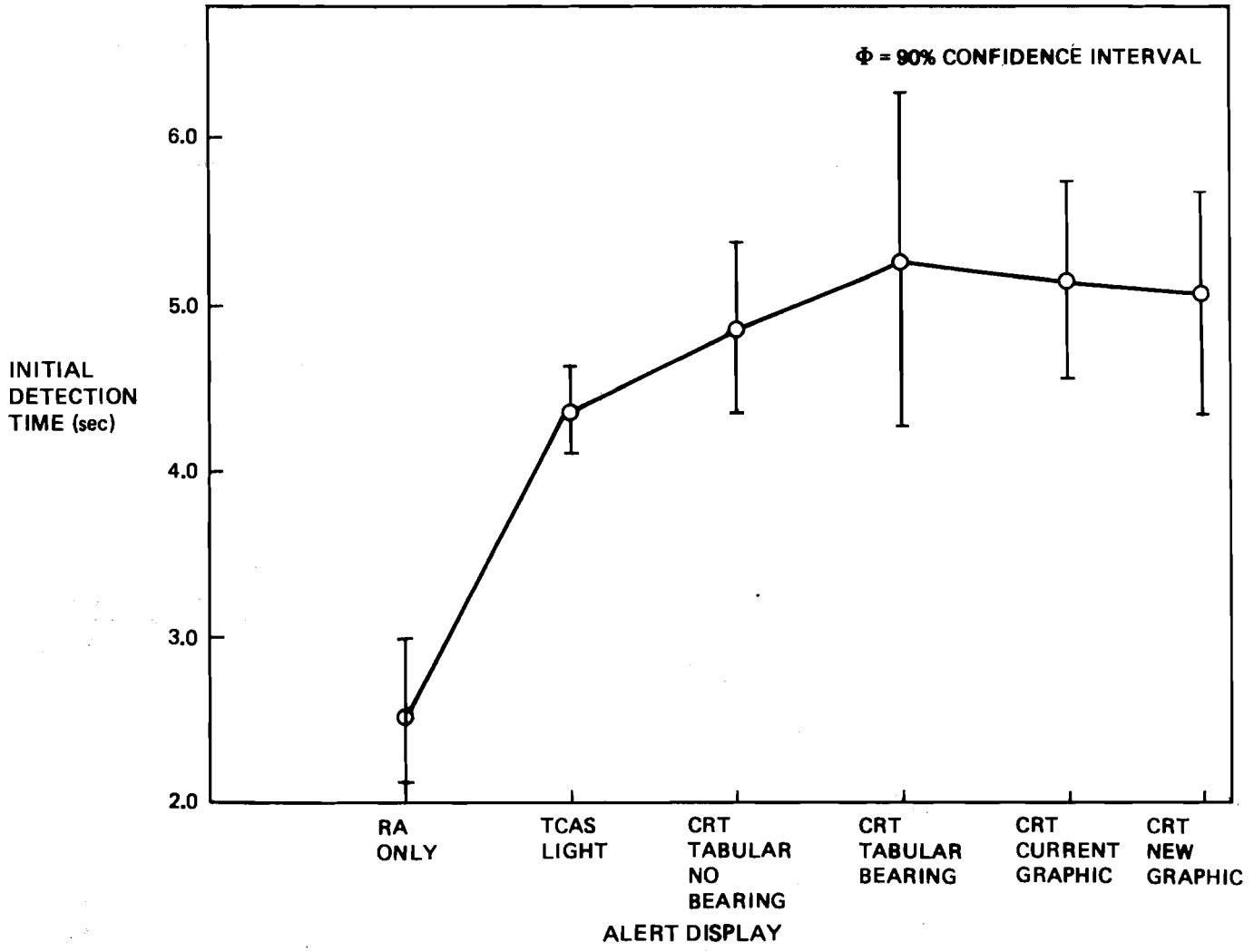

*All visual displays were accompanied by a master aural alert.

Figure 4.8.1-1. Initial Detection Time as a Function of Alert Display

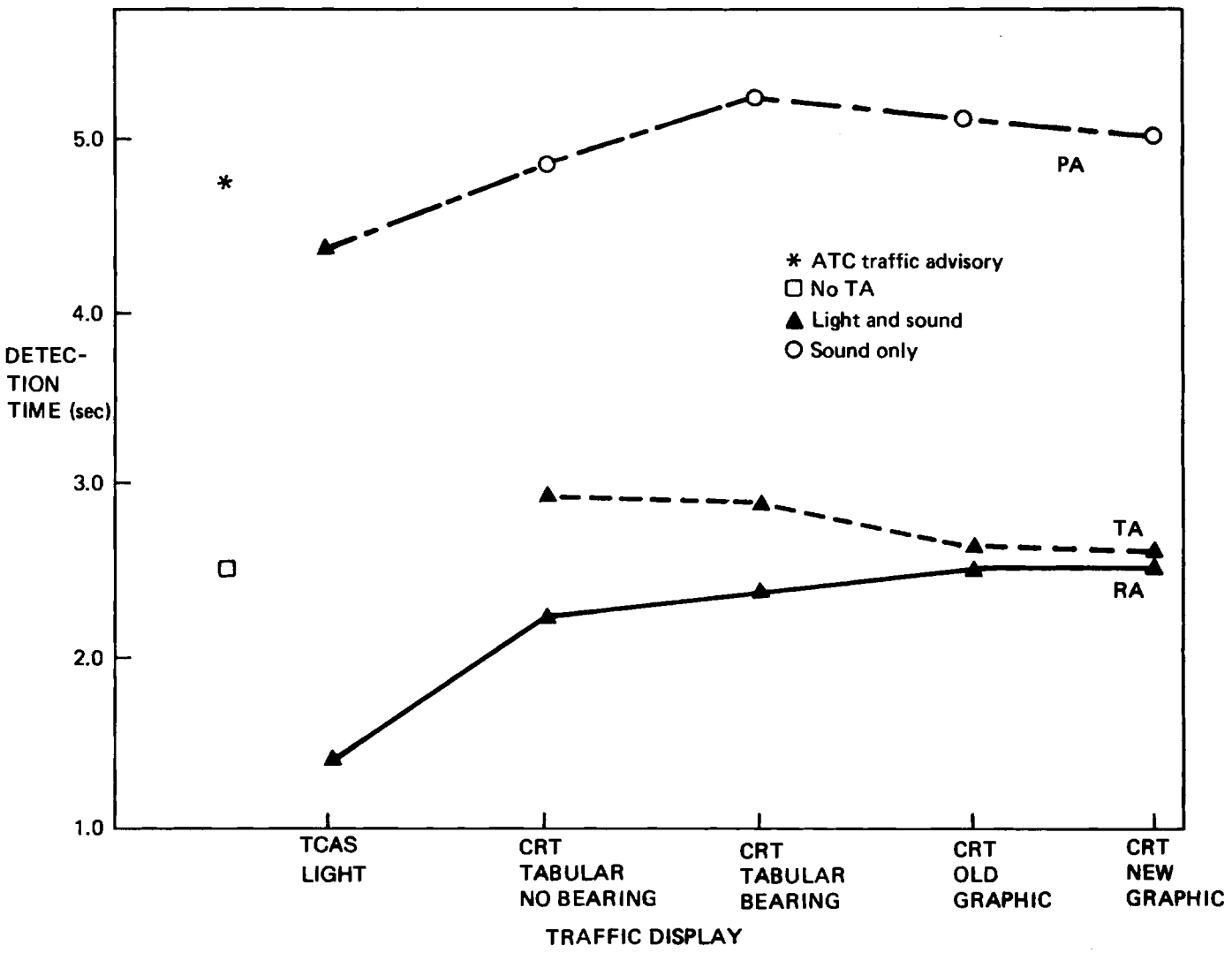

Figure 4.8.1-2. Alert Detection Time–TA Display

Table 4.8.2-1. ANOVA Summary Table for Response Times

Source	Sum of squares	Degrees of freedom	Mean square	F	Probability F exceeded
Mean	5,406.86	1	5,406.86	816.34	0.00
Non-RA encounters (N)	4.39	1	4.39	0.66	0.43
Error	66.23	10	6.62		
RA display type (R)	182.85	2	91.42	51.71	0.00
RxN	1.10	2	0.55	0.31	0.73
Error	35.35	20	1.76		
TA display type (T)	8.91	3	2.97	2.34	0.10
TxN	1.66	3	0.55	0.43	0.72
Error	38.21	30	1.27		
RxT	3.10	6	0.51	0.32	0.92
RxTxN	8.24	6	1.37	0.86	0.52
Error	95.36	60	1.58		
Vertical maneuver (V)	1.12	1	1.12	1.57	0.23
VxN	1.10	1	1.10	1.56	0.23
Error	7.11	10	0.71		
RxV	0.49	2	0.24	0.21	0.80
RxVxN	0.81	2	0.40	0.35	0.70
Error	22.75	20	1.13		
TxV	1.25	3	0.41	0.38	0.76
TxVxN	1.39	3	0.46	0.43	0.73
Error	32.18	30	1.07		
RxTxV	5.77	6	0.96	0.95	0.46
RxTxVxN	8.69	6	1.44	1.43	0.21
Error	60.60	60	1.01		

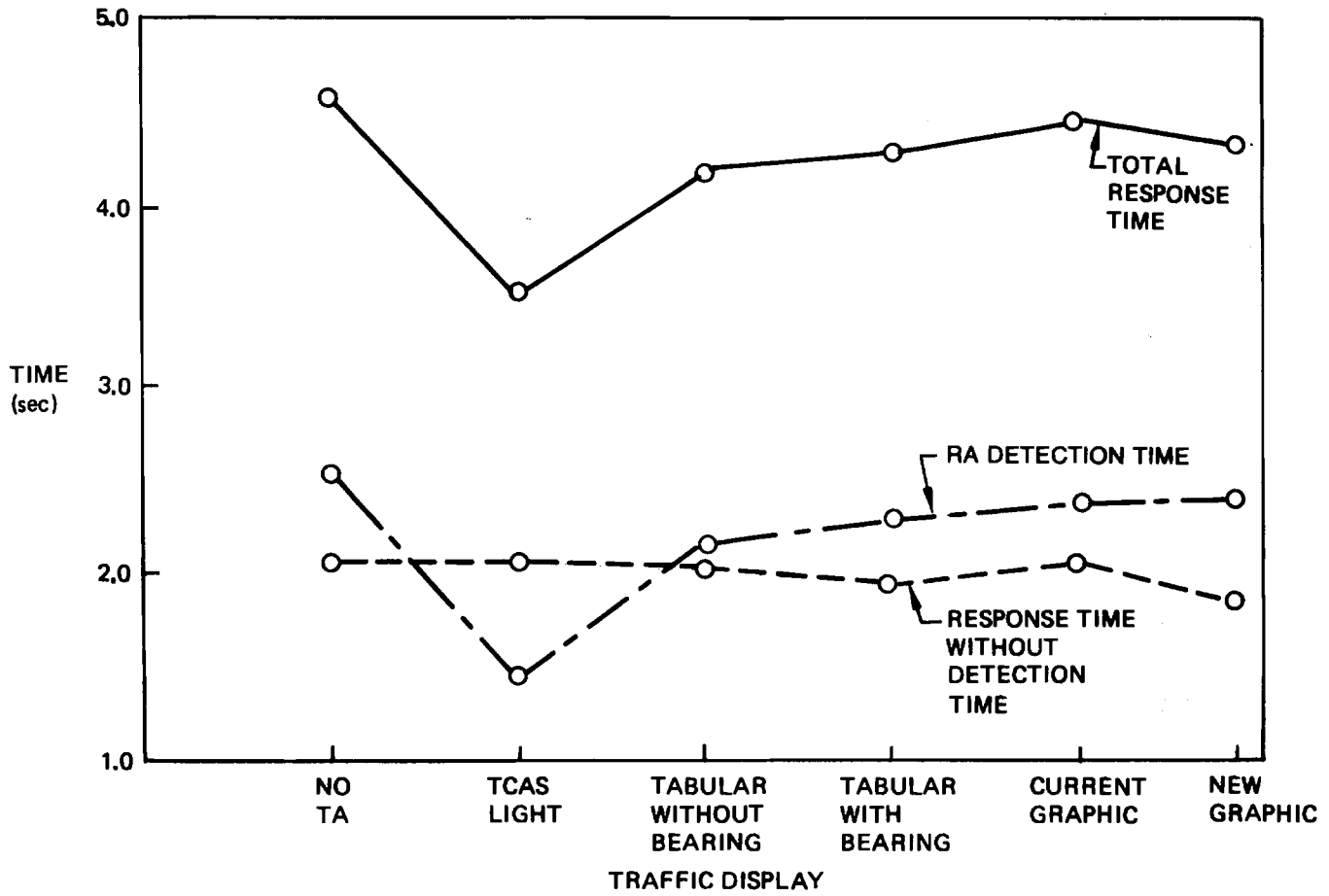

Figure 4.8.2-1. A Comparison of Response and Detection Times as a Function of the Traffic Display

The main effect attributed to the resolution advisory display was also significant (F=51.71 df 2,20). The mean response time for the voice only condition (5.45 seconds) was significantly longer than for either the IVSI (3.63 seconds) or the LED (3.94 seconds) display. When combined with voice even though the IVSI display consistantly produced shorter response times than the LED display, the mean differences were not statistically significant. When the response times are again partitioned into these two components it can be seen (Figure 4.8.2-2) that the differences observed between displays are due in this case to the response to the display rather than the detection of the RA condition. The detection time curve has no measurable difference across the displays while the response curve does exhibit the pronounced difference for the voice display..

4.8.3 Missed Alerts and Incorrect Responses

The pilots responded to all of the alerts. In all cases the direction of response was correct. This result corresponds to the data obtained from previous alerting studies in which no warning level alerts were missed. There were some alerts, however, which though correct in direction were not of the prescribed magnitude (8 feet per second squared) and therefore were not included in the data. This set of responses (105) constituted eight percent of the total number of responses (1380) and was not concentrated in any one treatment condition.

4.8.4 Pilot Input

The debriefing questionnaire is presented in Appendix D. Ninety-two percent of the pilots who participated in the simulator tests returned a completed questionnaire. The majority (75%) of pilots participating in the test were familiar with the TCAS program prior to testing. This fact does not make the opinions expressed any less usable; however, it does suggest that the test design and display configurations may have had less impact on the opinions of this group of pilots than they would have had on a less informed group. The most often stated aspect required of the TCAS system was reliability. Seventy-five percent of the pilots felt that the system should not be required on aircraft until it can be demonstrated to perform reliably. The three criteria that were mentioned for system implementation were:

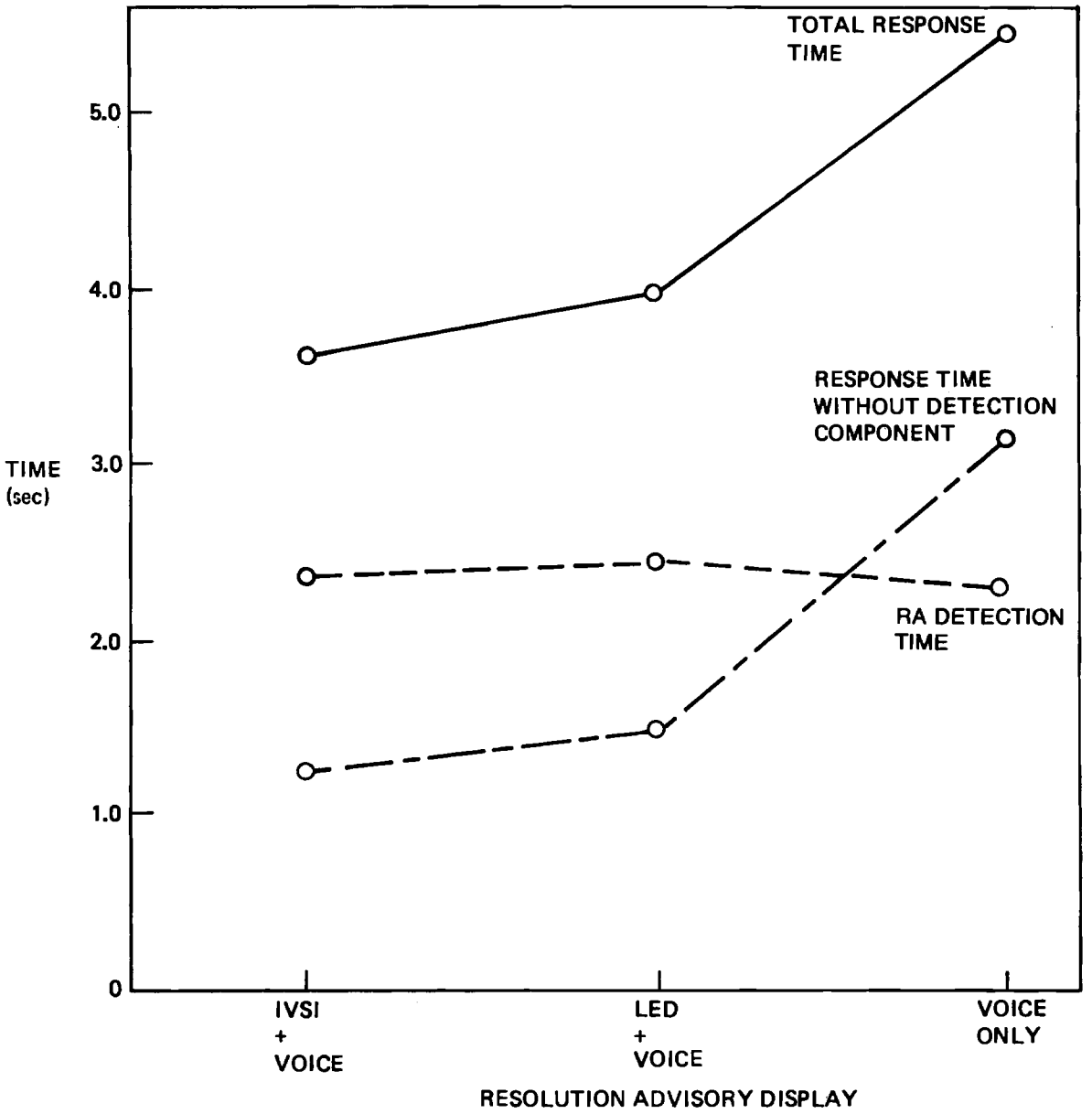

Figure 4.8.2-2. Comparison of Response and Detection Times as a Function of the Resolution Advisory Display

- System Reliability
- Economic Reasonability
- ATC Compatibility

System unreliability was most often given as the only reason for the pilot not following the RA guidance. Seventy-five percent of the pilots felt that the system should be designed so that the pilot would not be justified in refusing to do the RA maneuver. In reviewing the test system, all of the pilots said they usually agreed with the guidance presented. Some concern was voiced, however, that when they did not agree with the alert (for whatever reason), there was some hesitation in following it.

When considering the operational environment eighty-four percent of the pilots responded that horizontal maneuvers should be considered in the TCAS system for those situations where a vertical maneuver may be inappropriate such as: when operating close to the ground or obstacles; when close to performance limits of the aircraft; when given a hard altitude by ATC; to eliminate crossing altitudes; in high density situations. Agreement was not reached on changes in the amount of communication that will be required with ATC, forty-two percent saw a decrease and sixteen percent said that it would remain unchanged. There were some changes in operational procedures that were identified as being required for TCAS implementation. These were: providing the Captain with emergency authority to break clearance due to an RA; provide for an automatic transmission to ATC when an RA occurs; defining who has authority if ATC and RA should provide conflicting commands. Finally the pilots report that even though there should be no reduction in present traffic separation, (75%), they would feel more confident when overflying another aircraft and that TCAS would result in a safer operational environment (100%).

In conjunction with opinions concerning general system operations, it was also an objective to obtain more specific reactions to the system features. The following will be a summary of those questions dealing with the three major system components, the master alerts, the resolution advisory and the traffic

information display. Eighty-four percent of the pilots responded that both an aural and visual master alert were needed to get the crew's attention under all conditions. Ninety-two percent of the pilots rated the aural sounds used in the test as either good or excellent. It was indicated, however, that three levels of alerting urgency were too many and only two levels were recommended, caution (TA) and warning (RA). The attention getting quality of the master alerts was also rated as good to excellent by ninety-two percent of the pilots. Changes that were recommended concerning the master alert were primarily directed toward the timing sequences. Some of the pilots were bothered by the fact that the tone and the light and the CRT displays did not all come on at the same time. This lack of coordination was caused by the way that the alerts were initiated because the aural alerts had a direct path to the main computer and the visual alerts were dependent on the BEU update rate (2 seconds). This problem will be solved for future testing.

All of the pilots felt that some form of caution level alert would benefit the TCAS system. The reasons most often given for having the caution alert (84%) were to reduce the startle effect of the RA and to prepare the crew for possible action. The answer to the question of how to provide this preliminary alert was not so clear cut. Forty-five percent of the pilots reported that an amber light should be used and fifty-five percent wanted to see a graphic CRT presentation. In conjunction with this result, sixty-seven percent of the pilots expressed concern that an automated traffic advisory display (CRT) could lead to pilot complacency with insufficient visual scan time being devoted to nontransponder-equipped aircraft.

The data indicates that if a traffic information display is included it should present the information graphically (100%) using color for the urgency level (100%). The average number of traffic advisories that the pilots felt they could monitor simultaneously while attending to flight duties were 2.5 intruders and the range of responses was from zero to five intruders. As can be seen in Figure 4.8.4-1 the graphic displays were considered more useful than current ATC traffic advisories. If bearing information is included on the tabular display, the pilots considered the display equally as useful as the ATC traffic advisories; however, the majority of the pilots (75)% commented that this was true only for a single intruder. If multiple

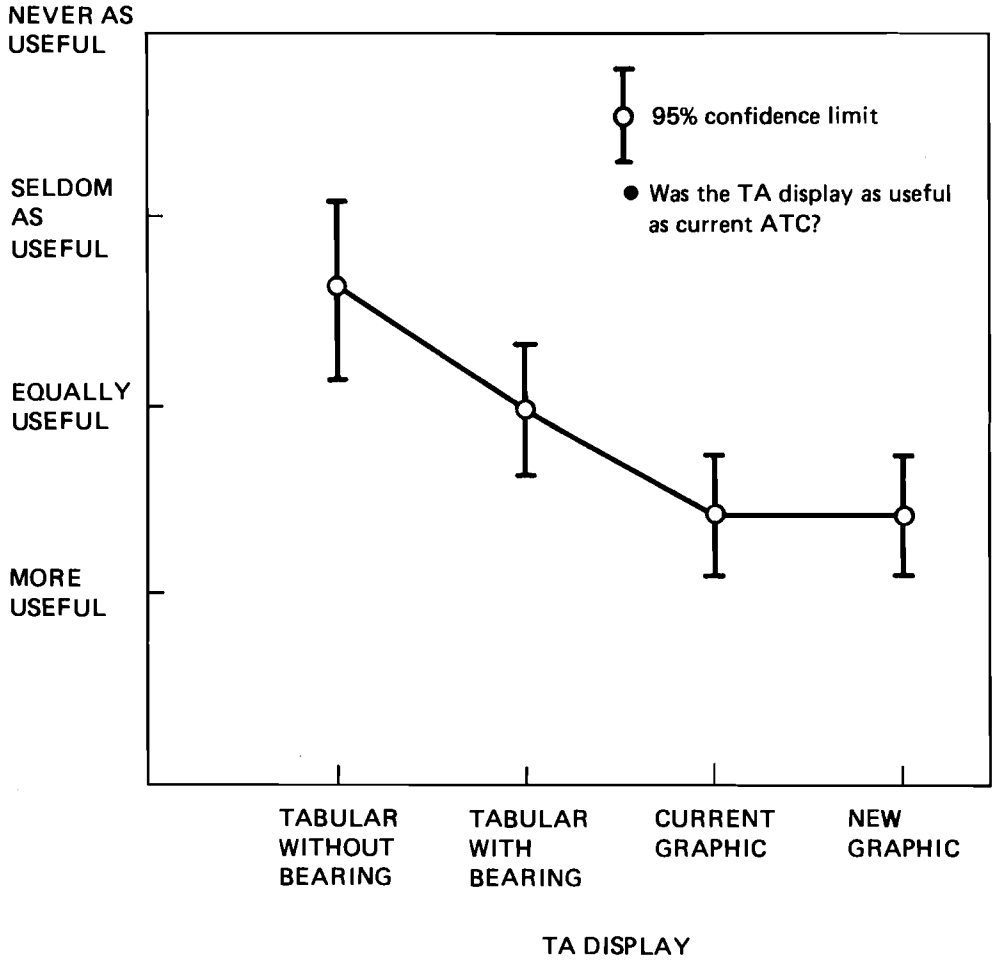

Figure 4.8.4-1. Pilot Opinion Concerning the TA Display Usefulness

intruders were present, the tabular display was much more difficult to use even with bearing information presented on the displays. The graphic displays were rated the least ambiguous and the tabular display without bearing information, the most. The advanced graphic display was the most preferred CRT traffic advisory format, being preferred by ninety-two percent of the pilots.

There was no consensus among the pilots as to what traffic should be presented if a CRT type of display is available. Thirty-three percent of the pilots felt that only threats as defined by TCAS should be presented and thirty-three percent felt that TCAS threats should be presented with the option of displaying surrounding traffic when a threat is present, finally thirty-three percent felt that the surrounding traffic should appear automatically when a TCAS threat is present. When an intruder is shown on the CRT, the majority of pilots required the following information about it: bearing data (67%); horizontal separation (75%) both range and time; and the altitude of the intruder if known (100%) relative to own altitude (75%) and in hundred foot increments (92%). Other information that some of the pilots would like to know about the intruder includes: direction of vertical movement (33%; closure rates (33%); heading or track (25%); and vertical speed (17%). One option available on the traffic display is to permit the intruder aircraft to remain on the display after a corrective maneuver has been accomplished, to show the pilot where it went. The majority of the pilots tested (67%) felt that this feature would not be useful. When investigating the traffic information display utility with respect to flight phases the pilots felt that it would be most useful in the climb, cruise, descent and approach phases and least useful during takeoff and landing.

The third component of the TCAS display system is the resolution advisory display. Ninety-two percent of the pilots tested felt that corrective types of RA's (e.g, CLIMB or LIMIT DESCENT to 500 fpm) are necessary to the system and only thirty-three percent felt that predictive alerts (e.g., don't descent) are necessary. Sixty-seven percent of the pilots rated the corrective alerts more critical than the predictive while none of the pilots selected the opposite rating. For the presentation of the corrective alerts, an arrow was selected as the most appropriate indication of a vertical

maneuver (100%). Since the present system only provides for vertical resolution advisories, ninety-two percent of the pilots indicated that the vertical speed should be included on the resolution advisory display. Considering these responses it is not unexpected that the modified IVSI was rated the clearest, least ambiguous resolution advisory display (see Figure 4.8.4-2) and the LED display the least clear, especially by those pilots who saw both vertical maneuver alerts and vertical limit alerts.

Care must be used in selecting the voice messages. During the test a number of occasions were reported where the pilot mistook the voice alert "Limit climb two thousand feet per minute" as being "Limit climb to a thousand feet per minute". Ninety-two percent of the pilots felt that the modification of the IVSI did not detract from the primary purpose of the instrument and that the use of color did help the interpretation of the information presented.

Some of the changes suggested for the displays used in the test include:

IVSI - make brightness adjustable

- add horizontal maneuver arrows
- indicate required climb rate
- make needle more visible

LED - reduce complexity

- make brightness adjustable
- move to glareshield

VOICE - reword messages to eliminate ambiguity

- automatically cancel after two repetitions
- make more urgent

Finally, all of the pilots felt that the alerts provided them sufficient time to react and the pilots usually agreed with the resolution advisory.

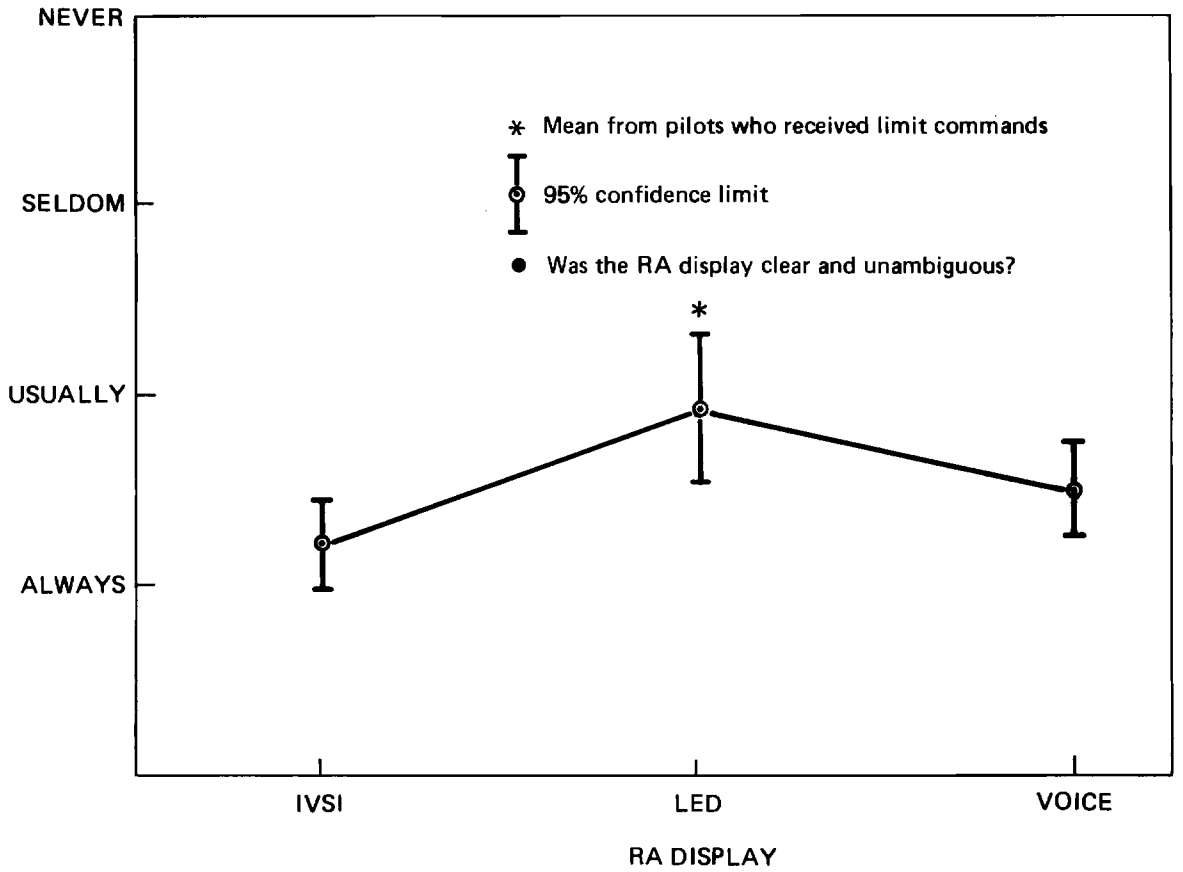

Figure 4.8.4-2. Pilot Opinion Concerning the RA Display Clarity

5.0 DISCUSSION AND CONCLUSIONS

Since any collision avoidance warning can be defined as a time-critical alert, of primary importance when considering the display system to be used is the speed and accuracy of the response produced. Therefore, anything that increases the speed of alert detection and response without having an adverse effect on response accuracy should be considered in the system recommendations.

Care must be used when interpreting the results of this experiment and their real world significance, because the pilots know that alerts are going to occur during any experimentation with crew alerting. When investigating time-critical alerts especially, the time between alerts must be artificially short because the experiments would not be very cost effective if a more realistic time scale were used. Therefore, in the present study, the pilots were expecting the alerts and their responses were faster than they would normally be. They were also faster because the pilots did not have to complete the entire evasive maneuver for their response but rather they only had to attain an acceleration of .25G. These constraints lead to a skewing of the data toward zero and reduced the differences among treatment means raising the level of difficulty in discovering significant differences between the means. Therefore, any effects that were found to be statistically significant should be considered even though they may not look to be of practical significance, since it is expected that the differences will become larger in real life situations.

The results of the study indicate that not only the initial detection time but also the change detection time is very sensitive to the alerting displays. The initial detection time was dependent on three basic alert combinations: a red light in the primary field of view with a warning sound; an amber light in the primary field of view with a chime; and a CRT display in the secondary field of view with the chime. Each of these combinations produced a significantly different mean detection time from the others. The warning light and sound producing a faster detection than the amber light and sound even though the amber light had twice the lighted surface area than the red light. The warning alert also had a voice component which could have been

contributing to detection performance; however, if this were the case, the ATC traffic advisories should have been detected faster than the TCAS light. This was not the case. These results tend to indicate that the sound characteristics were more important in attracting the crew's attention. It shows that for warning situations, especially when time is critical, a chime may not be able to produce sufficiently rapid response times. The results, that show significantly faster detection with a light in the primary field of view than with a visual display in the secondary field of view, are consistent with previous studies (7,8) and indicate that if the alert requires immmediate attention, a visual alert should be located in the primary field of view and combined with a sound that is appropriate for the urgency level.

The next question to answer is whether or not the caution or "get ready" alert is benefical and how much information does it need to supply to the crew. If the system is going to use multiple urgency levels, the detection of level change becomes an important factor. The TCAS light represents the least complex caution alert. The only information that it carries is the fact that an intruder aircraft has come to a caution level position. This alert resulted in a significant improvement in the RA detection time when compared to RA's which had no previous caution. One might then ask, if a little bit is good, should more be better? The conditions that used the CRT display for traffic had two alert levels before the RA. With the urgency levels changing every ten seconds you would expect that having two urgency levels before the RA would be as good or better than the single level and signficantly better than with none at all. This was not the case. As the results show, the RA detection with the CRT traffic displays was signficantly slower than with the TACS cuation light. There was no measurable difference between having a CRT for the lower level alert and having no caution at all. This finding indicates that something else is overcoming the advantage created by using the CRT as a for the caution level alerts. If the RA is considered an intruding task when the pilot is using the traffic display, a workload explanation can be postulated for the increase in detection time. Rolfe (12) has shown that as workload increases the performance of other tasks decreases. Therefore, as the traffic display presents the pilot with an increase in information it becomes more difficult for the resolution advisory to attract his attention and therefore for him to start the correct response. The response performance also

indicated this effect. Response time to the RA which followed the TCAS light (TA alert with the least information) was significantly shorter than the times for the RA response following a CRT presented TA. It was further found that when the response time was broken into its two components, the detection component and the response component, the former was the driving factor in the overall time. This indicates that when the time to respond is the only measurement criteria, the sooner the pilot gets the critical information the faster he will respond. In the case of this study, the critical information was the guidance presented on the resolution advisory display.

Another benefit attributed to the information on the CRT display is that it will permit the pilot to anticipate the direction of the resolution advisory maneuver if he is familiar with the algorithms. In order to look at this effect, the pilots were briefed that the resolution advisory would always direct them vertically away from the intruder (i.e., if the intruder is above the RA will be "Descend"). With this type of instruction, the pilots should have been able to use the positional information on the CRT to prepare for the RA maneuver and thus perform the maneuver faster than when they did not have the information. Even though sixty-seven percent of the pilots reported that they were using the CRT information to anticipate the RA maneuver, the performance data do not support this result. As pointed out above, the differences observed in response performance were due almost exclusively to the differences in the time to detect the resolution advisory. Once the alert has been detected, the response is not dependent on the amount of information the pilot had prior to the alert.

The resolution advisory display did have an effect on the pilots response performance, and when the response times were partitioned into the detection and response components it was found, as expected, that the differences were due to the response component. Therefore, the presentation media and format of the RA information was affecting the pilots response. The modified IVSI when combined with voice resulted in the quickest responses and the voice alone the slowest. The results support the pilots contention that they were using the visual display to initiate the action and the voice to verify response accuracy. To accomplish this procedure with the voice display alone would require extra time due to the serious nature of the voice message.

These data support previous findings, a summary of which can be seen in Figure 5.0-1, (13) which indicate that the best presentation method for information which requires rapid action is by using a combination of voice and visual displays. The complexity of the information presented on the visual display seems to have been a contributing factor to the response and preference differences between the IVSI and LED displays. The pilots felt that the LED display was overly complex and the data tend to support this feeling. Even though both displays presented a directional arrow for the alert, the response to the LED was consistently slower than to the IVSI. The increase in visual complexity with the tri-color background could have caused the difference. The lack of a dynamic vertical speed indication on the LED display was discussed as a major drawback for the vertical limit alerts as was the perceived ambiguity of the display.

The pilot inputs have been reported in the results section and in previous studies (4,6,7,8). They support a system that has two levels of urgency, caution and warning, with master alerts, both visual and aural, announcing each level. The resolution advisory display should provide guidance information in as straight forward and least complex manner as possible. Arrows should be used to show the direction of the prescribed maneuver and bars or some other index should be used in conjunction with a vertical speed indicator to set vertical limits. Color is desirable but too much color confuses the display. The voice messages should be consistent with the visual display and they should be distinctive so that there is no confusion between alerts.

The pilots were unanimous in their desire for a caution level alert but their opinion was mixed as to how this should be implemented. If however, some form of traffic display were included in the system, there are certain characteristics that the pilots would like the display to contain. The results indicate that the pilots desire a color graphic display which presents at a minimum the range, altitude and bearing of tau based intruder aircraft. The altitude requested was relative to the own aircraft; however, absolute altitude was not used in the test. A previous study (11), which had the pilot use absolute altitude and not relative, reported exactly the opposite findings. These results suggest that the pilots can use either presentation and are happy with the one most familiar to them.

Nature of stimuli	Response time (sec)	Test conditions and results
Visual Visual and buzzer Visual and voice	12.12 4.02 2.40	Tracking task; no impact on concurrent tracking task performance
Visual and buzzer Visual and voice	4.57 1.94	Tracking task; better tracking with voice warning
Visual and tone Visual and voice	9.35 7.89	
Visual and buzzer Visual and voice	2.63 1.62	
Visual Voice	128.27 3.03	High-speed, low-level military flight tests
Visual Voice	44.05 2.93	Visual consisted of analog instruments and lights in an F-100 aircraft
Auditory Visual	2.2 2.7	Simulation of a typical cockpit environment
Voice Buzzer	1.94 2.57	
Tone Voice	9.35 7.89	F-111 simulator; each alert consisted of a master caution light, alert identification light, and aural annunciation of the type described to the left
Tone, voice, and visual Tone and visual Voice Tone and voice Visual[a] Visual[b]	5.0 6.0 5.9 6.3 7.6 6.0	Simulation of electronic cockpit environment

[a]Visual presented outside pilot's primary field of view.
[b]Visual accompanied by a master alert in the pilot's primary field of view.

Figure 5.0-1. Typical Response Times as a Function of Display Type

6.0 TCAS CANDIDATE SYSTEM DESCRIPTION

The final step of the developmental simulation was to identify the TCAS display configuration which would be used not only in the operational simulation but also in future flight test programs. In order to perform this task it was necessary to review the TCAS and crew alerting data bases and utilize the relevent information. The literature (2,3,5,7,8,11), test results and the pilots' subjective input (Section 4) were used to identify the actual display characteristics. In the operational simulation, the recommended display configuration will be implemented in simulation hardware and validated while testing various operational procedures.

6.1 System Design Objectives

A number of design objectives were used in identifying the characteristics and logic of the displays recommended for TCAS. A major objective was to define a minimum set of information required by the system and relate that information to displays which are applicable not only to advanced flight decks which have an integrated alerting system but also to conventional flight deck which requires dedicated alerts. In this framework, there was a desire to develop an efficient and effective display configuration. Presentation of the information should minimize the time for the flight crew to detect, assess, and respond to the alerts. Information processing and memorization capabilities should be kept as low as possible. All displays and alert logic should be guided by the quiet dark cockpit philosophy. Finally, distraction and startle effects should be minimized to reduce disrupture of aircraft control.

6.2 TCAS Display Configuration

One of the major objectives of the developmental simulation was to define the recommended display configuration for implementation in subsequent phases of the TCAS effort.

In order to display TCAS information, two levels of alert urgency should be used:

- o Warning - Resolution Advisory - situations that require immediate corrective action.

- o Caution - Traffic Advisory - situations that require immediate crew awareness.

As a minimum these levels should be reflected in the combination of system components.

Three primary display components were identified, a master caution (TA), a master warning (RA) and resolution advisory display (both visual and voice). These components may be combined as follows:

- o Master Alerts

  - o Unique caution sound and amber annunciator as the traffic advisory (TA).

  - o Unique warning sound and red annunciator for the resolution advisory.

- o Resolution Advisory Displays

  - o Visual display providing information available on the modified IVSI

  - o Voice alert with information equivalent to the visual display and continuous until cancelled

The presentation of traffic information on a CRT display is also a method of presenting the caution level alerts. However, before this type of display is recommended for inclusion as a necessary component of the TCAS system, further

testing should be conducted to assess its impact on the total aircraft system. Therefore, it is recommended that a CRT display presenting a color graphic representation of traffic position and containing at least bearing, altitude, horizontal separation and vertical direction information for each intruder, be included in follow-on test efforts to provide this assessment.

The following sections will present some of the major characteristics of the system components. A more comprehensive description of component characteristics and the basis upon which they were recommended can be found in the design guidelines from the Aircraft Alerting Systems Standardization Study (2).

6.2.1 Master Alerts

The master alerts are used to attract the attention of the crew and provide preliminary information about the urgency of the alert. In the TCAS system only two levels of intruder alerts have been recommended, warning (resolution advisory) and caution (traffic advisory). The master alert should be unique for each level. Due to the attention getting qualities of these alerts, they may become a distraction once they have performed their function. Therefore, they should be manually cancellable and should also cancel automatically when the situation no longer exists.

It is further recommended that both visual and aural alerts be used to get the crews attention so that the system will be effective under the majority of workload and environmental conditions.

Master visual alerts should be provided for each of the crew members. The location of the alerts for the captain and first officer should be within fifteen degrees of each one's centerline of vision (see Figure 6.2.1-1) both head-up and head down. This is known as the primary field of view and has been defined as follows:

- Head-up - centerline of vision is a line from the eye reference point in the aircraft extending forward approximately ten degrees below horizontal.

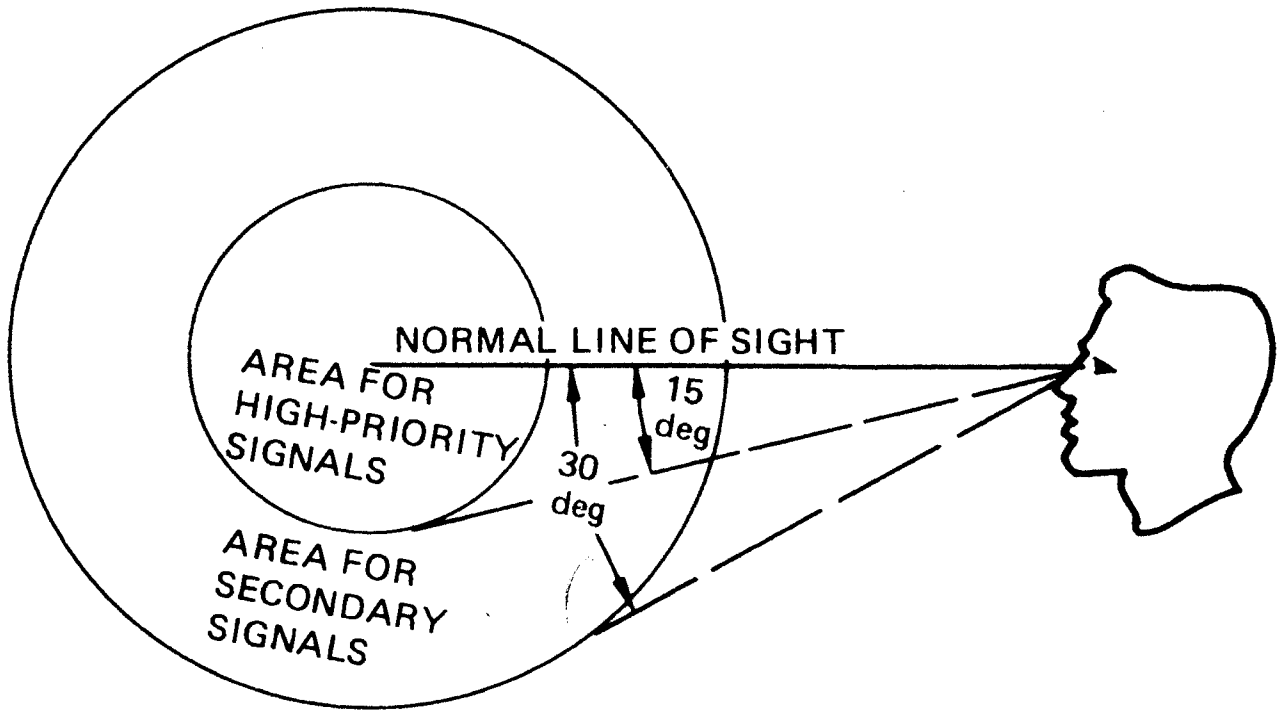

Figure 6.2.1-1. Recommended Placement of Visual Signals

- Head-down - centerline of vision is a line extending from the eye reference point to the center of the ADI.

Using these definitions will place the master visual alerts on or near the glareshield. The master visual alerts should subtend at least one square degree of visual angle. The lighted portion of the alert should be colored with amber being used for the traffic advisory (caution) and red being used for the resolution advisory (warning).

On conventional flight decks, discrete annunciators should be used for the TCAS masters. The legend "TCAS' should be clearly visual on all the annunciators. For flight decks that have an integrated alerting system with a comprehensive centrally located visual information display, the existing master warning/caution annunciators should be utilized with a "TCAS" message output on the information display.

A different master aural alert should be used for each urgency level. The sounds that are chosen should be designed to most effectively penetrate the noise spectrum in the cab. The intensity should be set at 8± 3 dB above the masked threshold and be held at that level by using automatic gain control.

So that the crew can quickly recognize the sounds and voice as being generated by the alerting system, they should be perceptually separated from competing sound sources (e.g. ATC, ground communication, etc.). The sounds should be selected to reflect the alert urgency level. In order to do this the sounds should have the following characteristics:

- Caution Sound (TA)

  - steady sound composed of at least two frequencies between 300 and 1500 Hz.

  - sound duration between 1.2 and 2.0 seconds

  - sound should repeat every 8 to 12 seconds until cancelled

- Warning sound (RA)

  - sound consisting of two alternating frequencies (European siren) in the 400 to 1000 Hz range separated by at least 300 Hz.

  - each frequency should be on for 0.2 to 0.3 seconds before alternating to the other

  - master warning should be active for 0.75 seconds before switching to voice

  - a silent time of 0.15 to 0.5 seconds should be provided between the sound and voice

Figure 6.2.1-2 provides a graphic presentation of sample master alerting sounds.

6.2.2 Resolution Advisory Displays

The resolution advisory alert meets the qualifications of a "time-critical" alert set forth in the alerting system design guidelines (2). The purpose of any time-critical display is to provide the crew with direct cues for responding to the highest-urgency level of warning. Therefore, recommendations for the presentation of alert information on the RA displays should follow those guidelines.

The resolution advisory will use both the auditory and visual channels to provide the pilots guidance for resolving the conflict. The information provided should be designed to facilitate the rapid detection and performance of the appropriate response.

A visual resolution advisory display should be provided for both the captain and first officer. The displays should be located within each pilot's head-down primary field of view. This recommendation is consistent with the findings of Cooper (6) which state "the most urgent warnings should be located adjacent to the controls and displays involved in alleviating the warning".

He further stated that "warnings related to aircraft control, such as "PULL UP" should be located adjacent to the instruments that the pilot is using such as the ADI or IVSI". These findings are also consistent with the recommendation that the RA display have vertical speed as an integral part of its information. The display should provide the pilot guidance as to the correct action. The most effective way to provide the information has been found to be graphic using color to connote urgency. Care must be used in developing any graphic scheme so that the format is easily understood. An arrow should be used to give the direction of any vertical maneuvers. If the RA imposes a limit on a maneuver already in progress, bars or other types of indexes should be in conjunction with the vertical speed indicator to show the limits. These limit bars should extend down to zero feet per minute. In both of these cases the alert calls for immediate action by the crew and thus should be coded red. The visual RA display should remain active until the alerting situation no longer exists and then cancel. As with any other flight instrument, the RA display should provide the crew with some indication when it has failed. Two types of failure have been identified for consideration, hardware and logic. System hardware failures should be identified on the display by a physical indication to the crew (e.g., flags, lights, bars, etc.) that the system is not operative. If the aircraft has an integrated alerting system, a message should also appear on the visual information display. The second failure type occurs when an RA condition exists but the logic cannot provide guidance for that particular situation. In this case the crew needs to know that they are in an RA situation but it must be very clear that the system cannot give guidance. One way to accomplish this would be to illuminate all the lights on the display.

The voice display for the resolution advisory should repeat the information provided on the visual display. Because of the time critical nature of the alert, the voice message should be activated automatically after a 0.75 second presentation of the warning sound. The alerting sound and essential elements of the voice message should be conveyed within 2.5 seconds. The message should repeat until, 1) the pilot cancels it manually 2) the alerting situation no longer exists or 3) the message changes. In each of these cases the message should complete then discontinue. In case three the new message would be preceded by the warning sound. The voice message should be presented in a monotone with an intensity that is 8± dB above the ambient noise.

6.2.3 Traffic Information Display

The test data indicate that the information increase resulting from a CRT traffic information display used for the TA can increase the pilot response times to the time-critical resolution advisory. Therefore, care must be used in developing procedures with a TCAS dispaly system that includes this type of display. However, since the developmental simulation tested the CRT display only with respect to its affect on the resolution advisory response time, including the pilots anticipation of the response, it is recommended that further testing be conducted with a color graphic presentation of traffic information to assess its impact on the use of TCAS and on the operation of the aircraft as a whole.

For testing, the display should present traffic information graphically using color to portray the urgency level of each individual aircraft. The number of aircraft present on the screen should be limited to a manageable number. Data has shown that three aircraft on the screen at any one time should be a maximum. The utiliziation of the display should conform to the quiet dark cockpit philosophy which calls for alerting displays to be dark when everything is normal. When the display is active, the symbology should move smoothly. Update rate should be increased or some smoothing function applied to the symbols to keep them from jumping.

Care should be taken in developing the graphic presentation so that the display can be easily interpreted and the symbology does not conflict with symbology already present on the flight deck. The own aircraft symbol should be centered horizontally and located toward the bottom of the screen to allow for faster head-on closure rates. The symbol should be consistent with other displays such as EHSI or HUD. At least one range ring should be provided to give the pilot some sense of distance to the traffic. The symbol representing traffic should be distinctly different from the own aircraft and it should change color with respect to its danger to the own aircraft. Altitude associated with each traffic symbol, if known, should be displayed in the same color as the traffic symbol. This altitude may be given in either absolute or relative to the own altitude. If absolute altitude is given for the traffic, the own aircraft altitude should also be presented on the display. Finally,

associated with the traffic should be some indication of vertical motion. If the traffic is non-mode C equipment, some indication (i.e, question marks) should be used in place of the altitude to show the crew that no altitude is available.

If surrounding non-tau based traffic is to be displayed, it should be available during the TA-RA sequence only to conform to the quiet dark cockpit. It should also be color coded with a color other than red or amber.

6.3 Follow-on Verification and Evaluation

Phase II of the study, the Operational Simulation, will have as its objectives:

- Develop and evaluate the operational procedures associated with CAS alerts under both normal and abnormal flight operations.
- Assess changes inflight deck operation associated with the CAS alerts
- Assess operational procedures as related to ATC control
- Assess the impact of TCAS display requirements on flight deck systems and layouts
- Validate the display concept in operational conditions

Phase II will complement the concept TCAS display system in simulation hardware and install it into a motion-base simulator with full operational capability. The appropriate TCAS software will be implemented to provide fidelity to the situation and to make the findings more generalizeable to actual operations.

REFERENCES

1. Anon, "FAA Workshop to Explain Details of Anti-Collision Systems" Aviation Daily, June 25, 1981, p. 310.

2. Berson, B.L., Po-Chedley, D. A., Boucek, G. P., Hanson, D. C., Leffler, M. F., Wasson, R. L., "Aircraft Alerting Systems Standardization Study, Volume II: Aircraft Alerting System Design Guidelines", FAA Report, FAA-RD-81-3811, January, 1981.

3. Veitengruber, J. E., Boucek, G. P., and Smith, W. D., "Aircraft Alerting Systems Criteria Study, Volume I: Collation and Analysis of Aircraft Alerting System Data", FAA Report, FAA-RD-76-222, May, 1977.

4. Veitengruber, J. F., "Design Criteria for Aircraft Warning, Caution and Advisory Alerting Systems", 77-1240-AIAA Aircraft Systems and Technology Meeting, Seattle, Washington, August, 1978.

5. Boucek, G. P., Veitengruber, J. E., and Smith, W. D., "Aircraft Alerting Systems Criteria Study, Volume II: Human Factors Guidelines and Aircraft Alerting Systems", FAA Report, FAA-RD-76-222, May, 1977.

6. Cooper, G. E., "A Survey of the Status of and Philosophies Relating to Cockpit Warning Systems", Report No. NASA CR-152071. NASA Ames Research Center, Moffett Field, California, 1977.

7. Boucek, G. P., Po-Chedley, D. A., Berson, B. L., Hanson, D. C., Leffler, M. F., White, R. W., "Aircraft Alerting Systems Standardization Study, Volume I: Candidate System Validation and Time-Critical Display Evaluation", FAA Report, FAA-RD-81-381, January, 1981.

8. Boucek, G. P., Erickson, J. B., Berson, B. L. Hanson, D.C., Leffler, M. F., Po-Chedley, D. A., "Aircraft Alerting Systems Standardization Study, Phase I Final Report", Report No. FAA-RD-80-68, February, 1980.

9. Smith, W. D., Veitengruber, J. E., Neuberger, W. K., Osgood, A. G., and Comisky, G. E., "Independent Altitude Monitor Alert Methods and Modes Study", FAA-RD-75-86, July, 1975.

10. Society of Automotive Engineers, "Aerospace Recommended Practice: Flight Deck Visual, Audible and Tactile Signals (Draft ARP-450D)", Society of Automotive Engineer's Inc., New York, September, 1979.

11. Morgenstern, B. and Berry, T. P., An Evaluation of Aircraft Separations Assurance Concepts Using Airline Flight Simulators, Publication No. 1343-01-3-2058, ARINC Research Corporation, 1979.

12. Rolfe, J. M., "The Secondary Task as a Measure of Mental Load, Measurement of Man at Work", Ed Singleton, W. T., Fox, J. G., and Whitfield, Van Nostrand Reinhold Co., New York, 1971.

REFERENCES (Continued)

13. Boucek, G. P., Hanson, D.C., Po-Chedley, D. A., Berson, B. L., Leffler, M. F., and Hendrickson, J. F. Aircraft Alerting Standardization Study, paper presented to the AIAA/IEEE, 4th Digital Avionics Conference, St. Louis, Mo., November, 1981.

14. Stevens, S. S., "Handbook of Experimental Psychology," John Wiley and Son, New York, 1951.

15. Edwards, A. L., "Experimental Design in Psychological Research," Holt Rinehart and Winston, New York, 1965.

16. Chapanis, A., "Research Techniques in Human Engineering," John Hopkins Press, 1959.

BIBLIOGRAPHY

Adams, J. A., and Chambers, R. W., Response to Simultaneous Stimulation of Two Sense Modalities, Journal of Experimental Psychology, Volume 63, pp. 193-206, 1962.

Adams, J. A., Humes, J. M., Stenson, H. H., Monitoring of Complex Visual Displays: III Effects of Repeated Sessions of Human Vigilance, Human Factors, Volume 4 (3), pp. 149-158, 1962.

Bate, A. J., Cockpit Warning Systems Comparative Study, Report No. AMRL-TR-68-193, Aeromedical Research Laboratory, Wright-Patterson AFB, Ohio, 1969.

Bateman, C. D., Introduction of the Ground Proximity Warning System (GPWS) into Airlines Service. Sundstrand Data Control, Redmond, Washington, Paper presented at 29th International Air Safety Seminar, Flight Safety Foundation, Inc., October 25-29, 1976, Anaheim, California.

Boucek, G. P., Veitengruber, J. E., and Smith, W D., Aircraft Alerting Systems Criteria Study, Volume II: Human Factors Guidelines and Aircraft Alerting Systems, FAA Report, FAA-RD-76-222, May, 1977.

Boucek, G. P. Erickson, J. B., Berson, B. L., Hanson, D. C., Leffler, M. F., Po-Chedley, D. A., Aircraft Alerting Systems Standardization Study, Phase I Final Report, Report No. FAA-RD-80-68, February, 1980.

Boucek, G. P., Hanson, D. C., Po-Chedley, D. A., Berson, B. L., Leffler, M. F., and Hendrickson, J. F., Aircraft Alerting Systems Standardization Study, paper presented to the AIAA/IEEE, 4th Digital Avionics Conference, St. Louis, Missouri, November, 1981.

British Airways, Warning Systems, International Air Transport Association Twentieth Technical Conference, Istanbul, November, 1975.

Brown, J. E. Bertone, C. M., and Obermayer, R. W. Army Aircraft Voice Warning System Study (G0131-8U1). Canoga Park, California: Bunker-Ramo Corporation, February, 1968.

Burrows, A. A. and Ford, H. K., Sounds in Warnings in Aircraft (Report No. FPRC966). Great Britain: Flying Personnel Research Committee, May, 1956.

Cooper, G. E., A Survey of the Status of and Philosophies Relating to Cockpit Warning Systems, Report No. NASA CR-15071, NASA Ames Research Center, Moffett Field, California, 1977.

Crawford, A., The Perception of Light Signals: The Effect of the Number of Irrelevant Lights, Ergonomics, Volume 5, pp. 417-428, 1962.

Crawford, A., The Perception of Light Signals: The Effect of Mixing Flashing and Steady Irrelevant Lights, Ergonomics, Volume 6, pp. 287-294, 1963.

Davis, R. C., Motor Components of Responses to Auditory Stimuli: The Effect of Stimulus Intensity and Instructions to Respond, American Psychologist, Volume 2, pp. 308, 1947.

Edwards, Elwyn, 1977. Flight Deck Alarm Systems, Human Factors Bulletin, January/February, 1977, Flight Safety Foundation, Inc., Arlington, Virginia

Egan, J. P., Carterette, E.C., and Thwing, E. J., Some Factors Affecting Multi-Channel Listening, Journal of the Acoustical Society of America, Volume 26, pp. 774-782, 1954.

Eike, D., Malone, T., and Fleger, F., Human Engineering Design Criteria for Modern Display Components and Standard Parts Essex Corporation, Alexandria, Virginia, 1980.

Eldred, K. M., Gannon, W. J., Vongierke, H., Criteria for Short Time Exposure of Personnel to High Intensity Jet Aircraft Noise, Report No. WADC-Tn-55-355, Wright Air Development Center, Wright-Patteron AFB, Ohio, 1955.

Erickson, J. B., Voice Warning Questionnaire Results, Internal McDonnell-Douglas Company AVI, December 1978.

Evaluation and Use of Auditory Displays and Aircraft Voice Warning Systems (Report No. 63-135). Newport Beach, California: Astrpower, Inc., September, 1963.

Federal Aviation Regulation 25.1322, Airworthiness Standards: Transport Category; Airplanes, Department of Transportation, Federal Aviation Administration, Washington, D. C., June 1974.

FED-STD-595, Colors, Washington, D. C., March, 1979.

Fletcher, H., Munson, W. A., Loudness, Its Definition, Measurement, and Calculation, Journal of the Acoustical Society of America, Vol. 5, pp. 82-108, 1933.

Fletcher, H., Speech and Hearing in Communications, D. Van Nostrand Company, Inc., Princeton, N. J., 1953.

Gerathewohl, S. G., Conspicuity of Steady and Flashing Light Signals: Variation of Contrast, Journal of the Optical Society of America, Volume 43, pp. 567-571-1953.

Gopher, D., Kahneman, D., Individual Differences in Attention and the Prediction of Flight Criteria, Perceptual and Motor Skills, Vol. 33, pp. 1335-1342, 1971.

Graham, W. Human Factors Considerations in Pilot Warning Systems (FAA RD71-114). Washington, D. C.: Federal Aviation Administration, December, 1971.

Hart, S. A. and Simpson, C. A., Effects of Linguistic Redundancy on Synthesized Cockpit Warning Message Comprehension and Concurrent Time Estimation (NASA TMX-73, 170), 12th Annual Conference on Manual Control, University of Illinois at Champaign-Urbana, Illinois, May 1976.

Hawkins, H. L., Stevens, S. S., The Masking of Pure-Tones and of Speech by White Noise, Journal of the Acoustical Society of American, Vol. 22, No. 6, 1950.

Hector, R. G. Methods of Auditory Display for Aircraft Collision Avoidance Systems (N72-14005). Edwards Air Force Base, California: Air Force Flight Test Center, August, 1971.

Henneman, R. H. and Long, E. R., A Comparison of the Visual and Auditory Senses as Channels for Data Presentation (WADC Tech. Report No. 54-363). Wright-Pattern Air Force Base, Ohio: August, 1954.

Kemmerling, P., Geiselhart, R., Thorburn, D. E., Cronburg, J. G., A Comparison of Voice and Tone Warning Systems as a Function of Task Loading, Technical Report ADS-TR-69-104, Air Force Systems Command, Wright-Patterson AFB, Ohio, 1969.

Kerce, E. W., Intelligibility Testing of Voice Model and Phoneme-Synthesized Voices for Aircraft Caution - Warning Systems, California State University, Long Beach, California, 1979.

Kohfeld, D. L., Simple Reaction Time as a Function of Stimulus Intensity in Decibels of Light and Sound, Journal of Experimental Psychology, Volume 88(2), pp. 251-257, 1971.

Licklider, J. C., Audio Warning Signals for Air Force Weapon Systems, USAF, WADD, Technical Report 60-814, March, 1961.

Luckiesk, M., Light, Vision and Seeing, Van Nostrand, New York, 1944.

McCormick, E. J., Human Factors Engineering, McGraw-Hill Book Company, New York, 1970.

McFarland, A. L., Human Factors Considerations in Establishing Aircraft Collision Avoidance System Alert Thresholds, SAFE Journal, Vol. 8, No. 1, 1978, pp 9-13.

Meister, D., and Sullivan, D. J., Guide to Human Engineering Design for Visual Displays, AD 693237, Office of Naval Research, Department of the Navy, Arlington, Virginia, 1969.

Merriman, S. C., Operational Attention - Intrusion Effects Associated with Aircraft Warning Lights of Various Size, Report No. NADC-AC-6901, Department of the Navy, Naval Air Development Center, Aerospace-Crew Equipment Department, Warminster, Pennsylvania, 1969.

Miller, G. A., The Magical Number Seven, Plus or Minus Two: Some Limits on Our Capacity for Processing Information, Psychological Review, Volume 63(2), pp. 81-96, 1956.

Mills, A. W., On the Minimum Audible Angle, Journal of the Acoustical Society of American, Volume 30, pp. 237-246, 1958.

MIL-C-25050, Colors, Aeronautical Lights and Lighting Equipment, General Specification for, Department of Defense, February 17, 1972.

MIL-M-18012B, Markings for Aircrew Station Displays, Design and Configuration of, Department of Defense, Februay 17, 1982.

MIL-STD-411D, Aircrew Station Signals, Department of Defense, Washington, D. C., August, 1967.

MIL-STD-1472B, Human Engineering Design Criteria for Military Systems, Equipment, and Facilities, Department of Defense, May 10, 1978.

Morgan, C. T., Cook, J. S., Chapanis, A., Lund, M. W., Human Engineering Guide to Equipment Design, McGraw-Hill Book Company, New York, 1963.

Mudd, S. A., The Scaling and Experimental Investigation of Four Dimensions of Pure-Tones and Their Use in an Audio-Visual Monitoring Problem, Ph. D. Thesis, Purdue University, Lafayette, Indiana, 1961.

Munns, Meredith, Ways to Alarm Pilot, Aerospace Medicine, July, 1971 pp. 731-734.

Munson, W. A., The Growth of Auditory Sensitivity, Journal of the Acoustical Society of America, 1947.

Noise Lectures presented by Bonvallet at the In-service Training Course on Acoustical Spectrum, February 5-8, 1952. Sponsored by the University of Michigan School of Public Health and Institute of Industrial Health, University of Michigan Press, Ann Arbor, Michigan.

Parks, D. L., Personal Communication Concerning Unpublished Test Results, 1979.

Pearsons, K. S. and Bennett, R. L. Effects of Interior Aircraft Noise on Speech Intelligibility and Annoyance (NASA CR-145203, N 77-29918/8 WT). Bolt, Beranch and Newman, Inc.

Pearson, K., Effect of Tone/Noise Combination on Speech Intelligibility, Journal of the Acoustical Society of America, Vol. 61, No. 3, March, 1977.

Po-Chedley, D A., Burington, C. R., The Effects of Alert Prioritization and Inhibit Logic on Pilot Performance, Report No. MDC J9076, McDonnell Douglas Corporation, 1981.

Pollack, I., Ficks, L., Information of Multidimensional Auditory Displays, Journal of the Acoustical Society of America, Vol. 26, pp. 155-158, 1954.

Pollack, I., The Information of Elementary Auditory Displays, Journal of the Acoustical Society of America, 24, pp. 745-459, 1952.

Pollack, I. D., Teece, J., Speech Annunciator Warning Indicator System: Preliminary Evaluation, Journal of the Acoustical Society of American, Vol. 30, pp. 58-61, 1958.

Pope, L. T., and McKechnic, D. F., Correlation Between Visual and Auditory Vigilance Performance, Report No. AMRL-TDR-63-57 Aerospace Medical Research Laboratories, Wright-Patterson AFB, Ohio, 1963.

Raab, D., and Fehrer, E., The Effects of Stimulus Duration and Luminance on Visual Reaction Time, Journal of Experimental Psychology, Volume 64(30, pp. 326-327, 1962.

Randle, R. J., Larson, W. E., Williams, D. H., Some Human Factors Issues in the Development and Evaluation of Cockpit Alerting and Warning Systems, NASA, Ref. Publication 055, January, 1980.

Sheehan, D. J., Heads-Up Display Warning Requirement Research, Final Report NR 213-086, Office of Naval Research, Department of the Navy, Arlington, Virigina, 1972.

Shower, E. G., and Biddulph, R., Differential Pitch Sensitivity of the Ear, Journal of the Acoustical Society of America 3, pp. 275--287, 1931.

Siegel, A. I., and Crain, K., Experimental Investigations of Cautionary Signal Presentations, Ergonomics, Volume 3, pp. 339-356, 1960.

Simpson, C. A., Effects of Linguistic Redundancy on Pilot's Comprehension of Synthesized Speech, Proceedings of the Twelfth Annual Conference on Manual Control, NASA TMX-73, pp. 294-308, May, 1976.

Simpson, C. A., and Williams, D. H., Human Factors Research Problems in Electronic Voice Warning System Design, N75-33681, 11th Annual Conference on Manual Control, NASA Ames Research Center, Moffett Field, California, May, 1975.

Simpson, C. A., and Hart, S. G., Required Attention for Synthesized Perception for Three Levels of Linguistic Redundancy, 93rd Meeting of the Acoustical Society of America, Pennsylvania State College, June, 1977.

Simpson, C. A., and Williams, D. H., The Effects of an Alerting Tone and of Semantic Context on Pilot Response Time for Synthesized Speech Voice Warnings in a Simulated Air Transport Cockpit, MCI Report No. 78-001, NASA Ames Research Center, Moffett Field, California, 1978.

Society of Automotive Engineers, Aerospace Recommended Practice: Flight Deck Visual, Audible and Tactile Signals (Draft ARP-450D), Society of Automotive Engineers, Inc., New York, September, 1979.

Speith, W., Curtis, J. F., Webster, J. C., Responding to One of Two Simultaneous Messages, Journal of the Acoustical Society of America, Vol. 26, pp. 391-396, 1954.

Steinman, A. R., Reaction Time to Change Compared with Other Psychophysical Methods, Archives of Psychology, New York, Volume 292, pp. 34-60, 1944.

Stevens, S. S., and Davis, H., Hearing, Its Psychology and Physiology, John Wiley and Sons, New York, 1938.

Stevens, S. S., Handbook of Experimental Psychology, John Wiley and Sons, Inc., New York, 1951.

VanCott, H. P. and Kinkade, R. G., Human Engineering Guide to Equipment Design, United States Printing Office, Washington, D. C., 1972.

Vanderschraff, A., Problem Area: Warning Systems, Fokker, VFW Aircraft Proceedings from the 20th International Air Safety Seminar of the Flight Safety Foundation, Anaheim, California, October 25-29-, 1976.

Veitengruber, J E., Design Criteria for Aircraft Warning, Caution and Advisory Alerting Systems, 77-1240 AIAA Aircraft Systems and Technology Meeting, Seattle, Washington, August, 1978.

Tannas, L. E., Jr., and Goede, W. F., Flat Panel Displays, a Critique, I.E.E.E. Spectrum, pp. 26-32, July, 1978.

Thorburn, D E., Voice Warning Systems, A Cockpit Improvement That Should Not Be Overlooked (AMRL-TR-70-138). Wright-Patterson Air Force Base, Ohio: Aero-medical Research Laboratory, Aerospace Medical Division, 1971.

Tobias, J. V., Auditory Effects of Noise on Air-Crew Personnel (FAA-AM-72-32). Washington, D. C.: Federal Aviation Administration, November 1972.

Wegel, R. L. and Lane, C. E., The Auditory Masking of One Pure-Tone By Another and Its Probable Relation to the Dynamics of the Inner Ear, Psychological Review, Vol. 23, pp. 266-285, 1924.

Williams, D. H. and Simpson, Carol A., A Systematic Approach to Advanced Warning Systems for Air Transport Operations: Line Pilot Preferences, NASA Aircraft Safety and Operating Problems Conference, NASA Langley Research Center, October, 1976.

APPENDIX A

TEST FACILITIES

A.Ø Simulation Center and Hardware Layout and Summary

The various requirements of this study called for an easily reconfigurable facility in which several flight deck systems could be demonstrated, tested and evaluated in a realistic environment. The Kent Visual Flight Simulator at the Flight Simulation Center was chosen. Located in a flexible experimental simulation laboratory, the simulator, called the Blue Cab, was modified to represent a generic wide body cockpit configuration with a working pilots station.

The cockpit instrumentation included two TCAS advisory displays, a TCAS advisory annunciator and two TCAS alerting devices (LED display and IVSI with directory lights). Several combinations of the TCAS equipment were used but they were never all used together.

An external visual workload was provided to the pilot through the forward windscreens; computer controlled video used for takeoff, target location. The pilot was also presented alerting aurals, air traffic control commands, background communications, and engine and aero sounds.

The test conductor was in visual and voice contact with the pilot throughout the tests from his console. This console enabled the test conductor to interface directly with the main computer and control all audio and video parameters. Figure A.0-1 depicts the layout of the simulation center.

A.1 Cockpit Simulator

The Blue Cab had a hybrid (electronic and conventional) main instrument panel, standard center console, and seats for the pilot and copilot. Active flight instruments were provided for the pilot only. Mounted on a hydraulic platform, the cab was positioned towards the front (projection screen side) of the lowered platform. This placed the pilot's eye reference point in an optimal relationship with respect to the hemisperical projection screen. The projector was located directly above the pilot and the eye reference point was about eighteen feet from the screen. A side view of the Blue Cab is illustrated in Figure A.1-1.

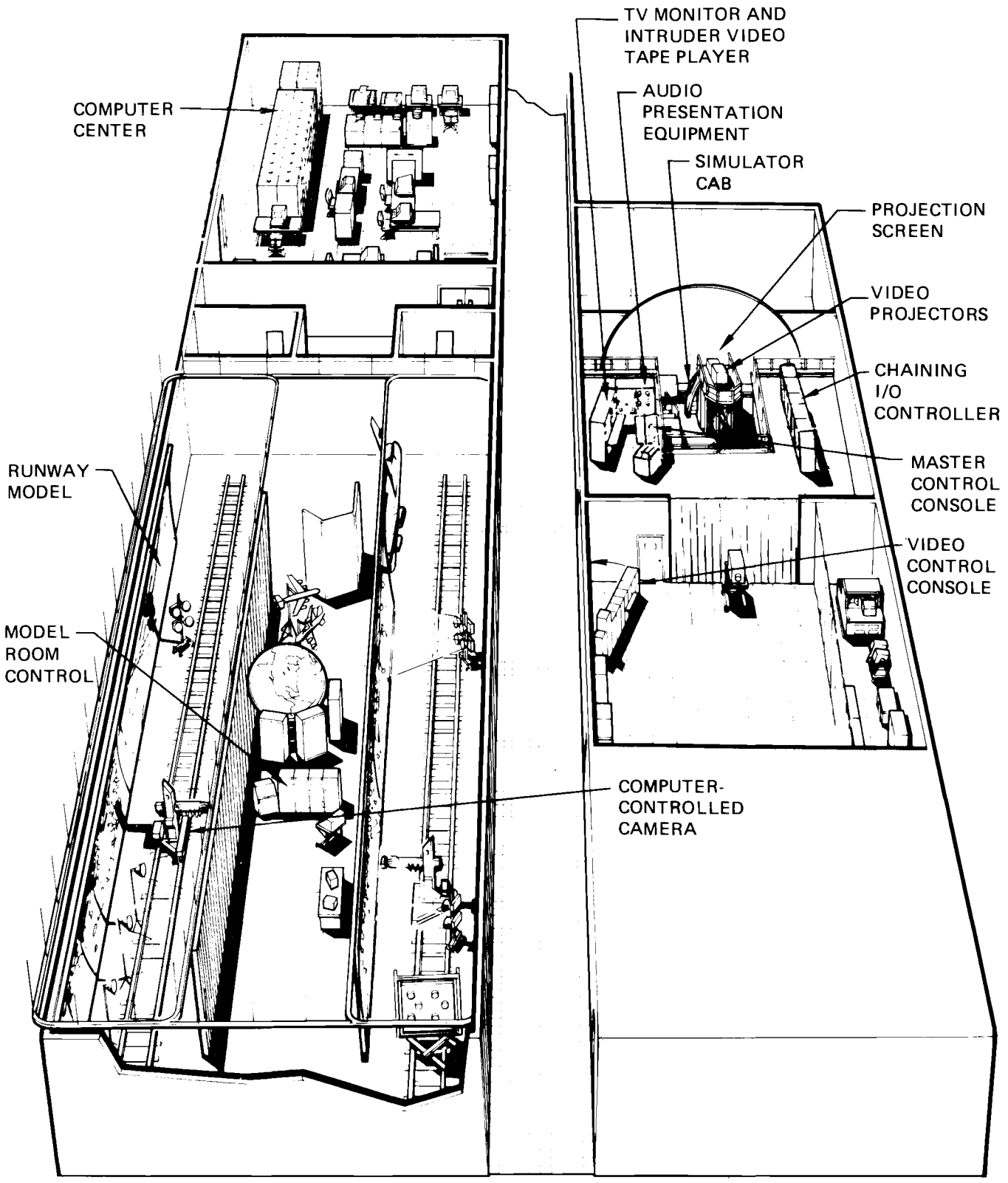

Figure A.0-1. Kent Visual Flight Simulation Center

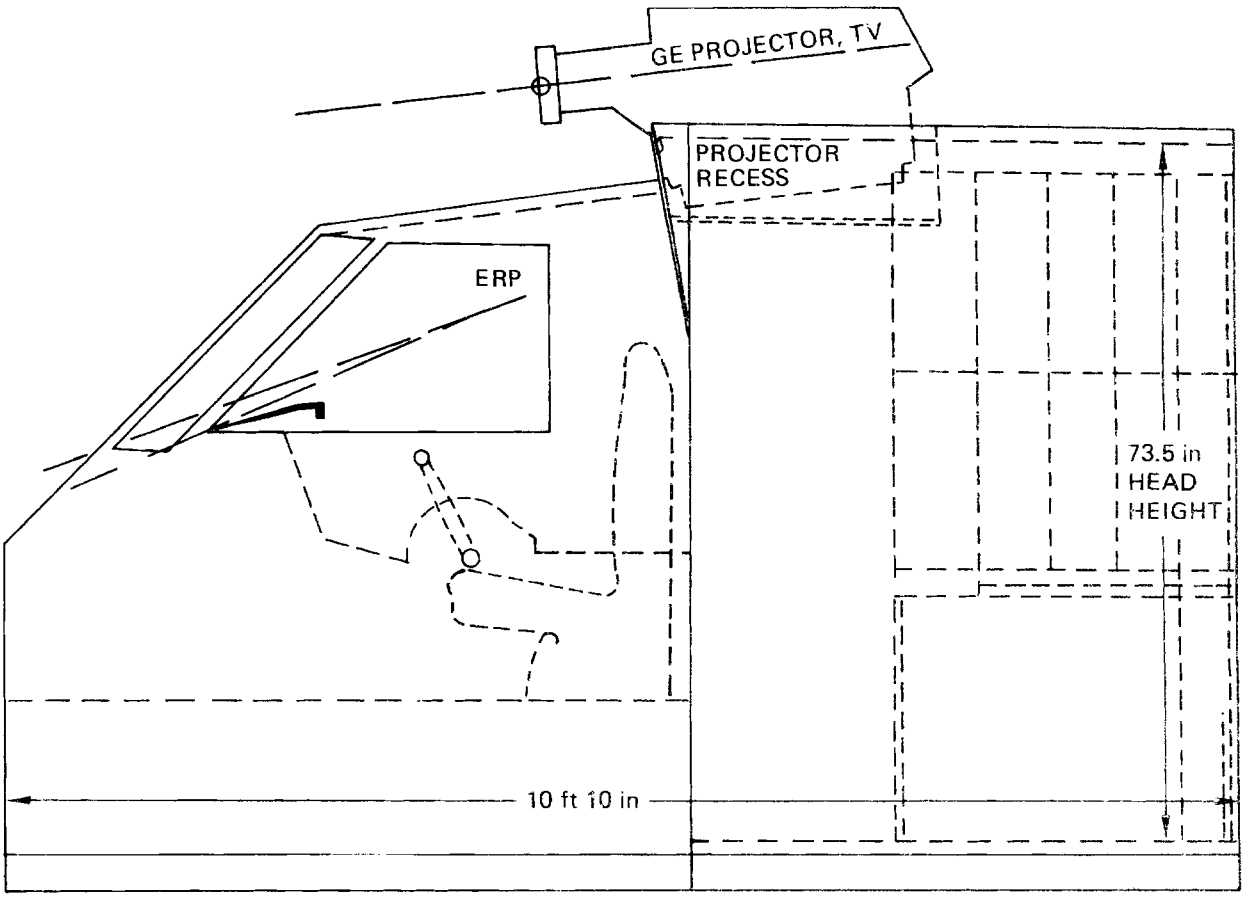

SIDE VIEW

Figure A.1-1. Side View of Blue Cab

A.1.1 Pilots' Instrumentation

The Blue Cab's main instrument panels, supporting framework and glareshield was designed to represent a generic wide body commercial aircraft. The pilots' instrumentation consisted of raster scan CRT's, standard electro-mechanical instruments, annunciators and switches. A (9 inch) color Hitachi CRT was used for the EADI and it was driven by a Boeing built color graphics generator. Advanced system alerts were presented on a (5 inch) color Hitachi CRT. A Lexidata model 3400 color graphics generator was used to drive this CRT. A (9 inch) black and white CRT used to display engine instrument information was driven by a Boeing built bar graphics generator. Refer to Figure A.1.1-1.

The servo and synchro motors of the electro-mechanical instruments were driven from a local controller. Digital information from the host computer was fed to the controller. The controller then passed it through digital to analog and digital to syncro converters. Discrete input cards sampled the switches when requested by the host computer.

This included the Pilot Response Panel switches (Figure A.1.1-2). Except for the "TCAS ALERT" and master Warning/Caution switch lamps, all lighted annunciators were driven with discrete output cards. The (amber) "TCAS ALERT" and (red and amber) warning and caution switches were controlled by a TCAS audio-video (TAV) unit, (Section A.2.2).

The FAA supplied a modified IVSI (with director lamps) which is discussed in Section A.2.6. Two different CAS Advisory Displays were evaluated. They were mounted in the center console forward of the throttles (Figure A.1.1-2). These advisory displays are described in Section A.2.5.

A.2 CAS Simulation Equipment

The CAS Simulation Equipment was designed to operate as an integral subsystem to the Blue Cab with only two interface links required between it and the host computer (Figure A.2.-1). This design made it possible for the system to be checked out before installation, eased integration and checkout in the simulation center, and will permit easier installation in different cockpit simulators for other phases of this study. The six subunits that make up the CAS equipment are described below.

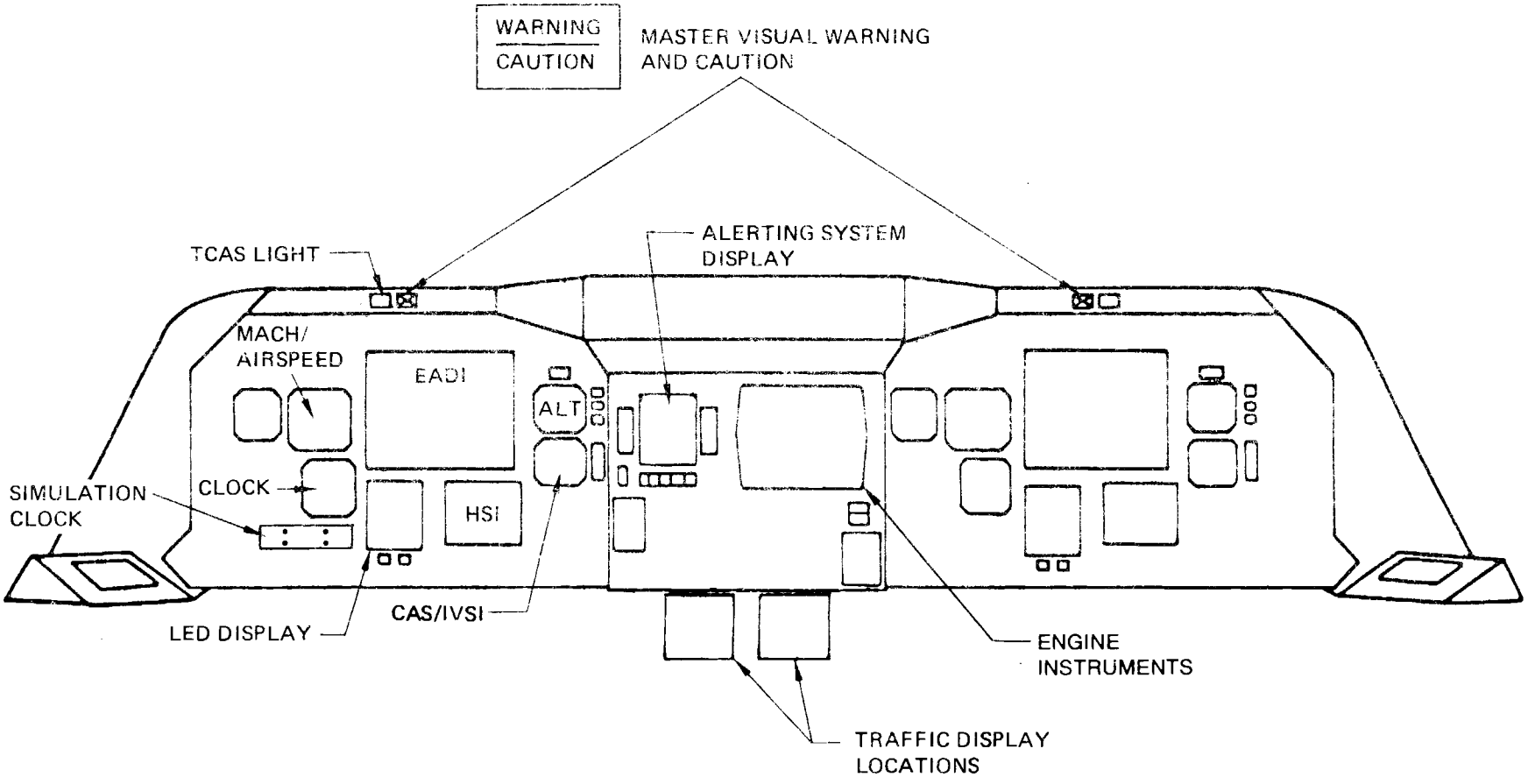

Figure A.1.1-1. Blue Cab Front Panel Layout

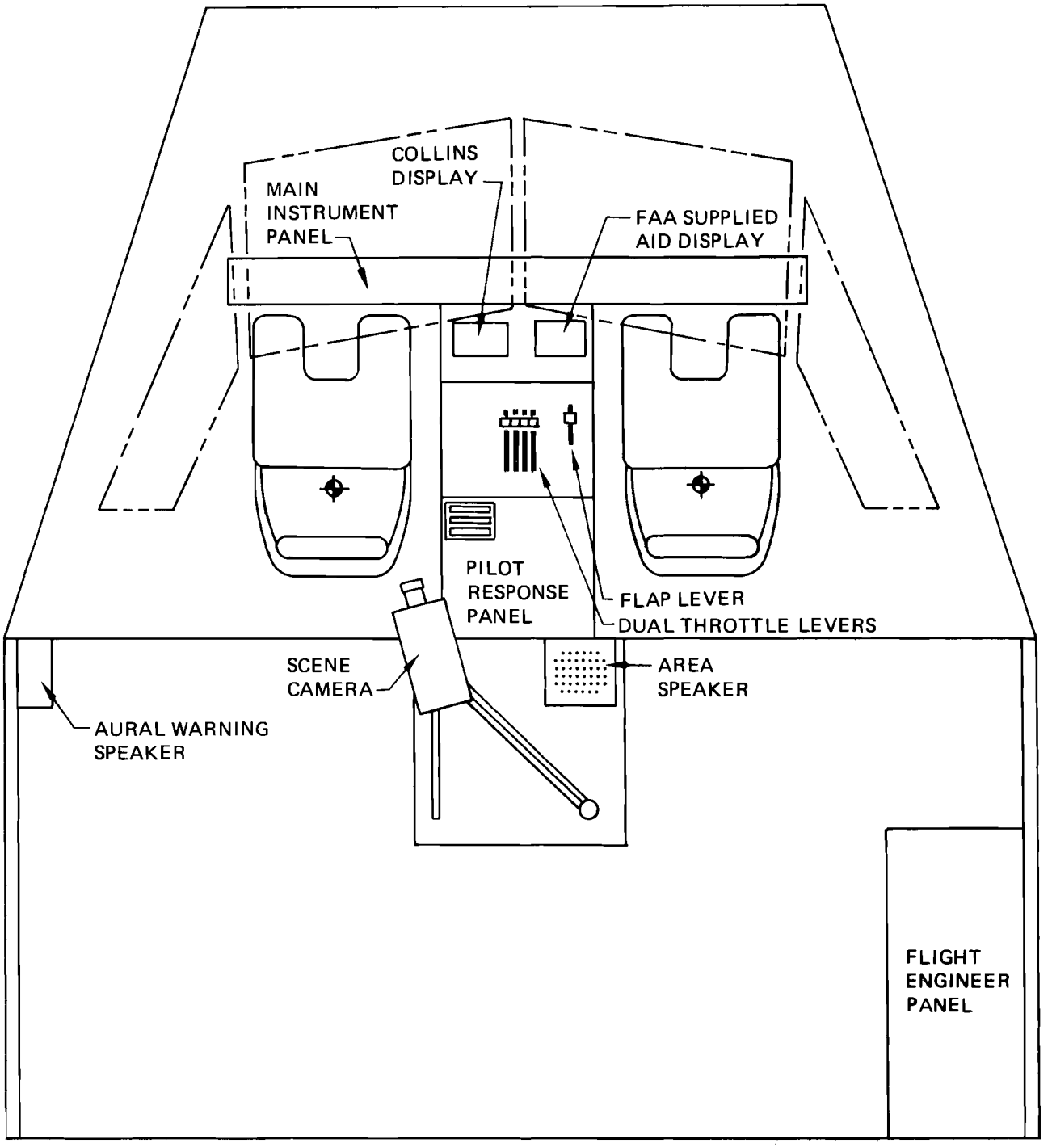

Figure A.1.1-2. Internal View of Blue Cab

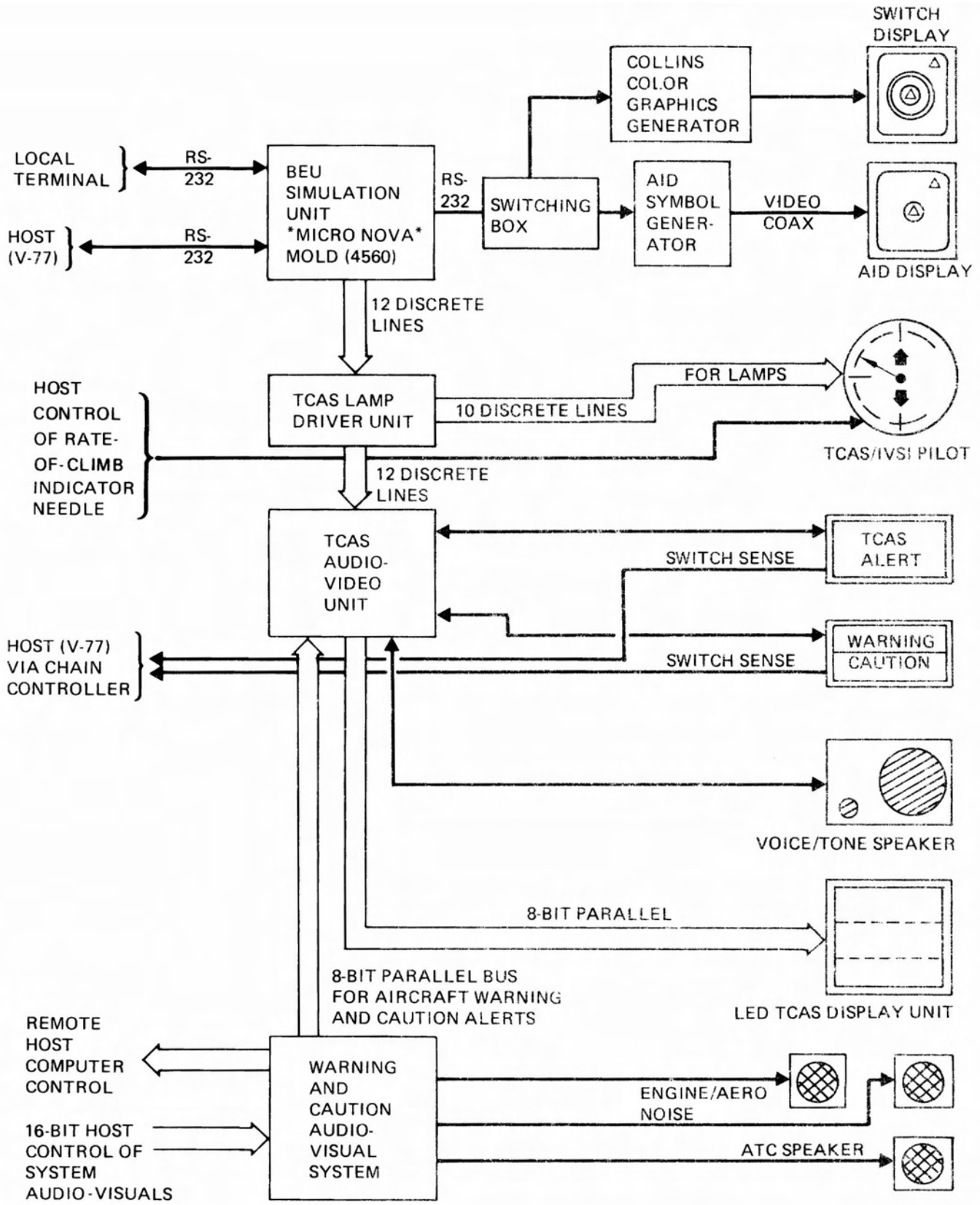

Figure A.2-1. CAS Simulation Equipment Layout

A.2.1 BEU Simulator Unit

In a TCAS equipped aircraft, Beacon Electronics Unit (BEU) will integrate aircraft performance data and compare it against TCAS interrogative aircraft in the general vicinity. If an intercept with one or more aircraft is predicted, the BEU will alert the flight crew with an advisory and/or time critical warning device.

An actual BEU was not available for this study so a Data General MicroNova was used to simulate some of the BEU functions. The MicroNova had 32k bytes RAM and a dual flexible disk unit for program and data storage. Three RS-232 serial ports and one 16-bit parallel port were used.

Much of the BEU active logic was not needed because "canned" intrusion scenarios were used. For this reason the slower and less powerful MicroNova capably supported this study.

The MicroNova was signaled from the host computer when to start each intrusion sequence via RS-232 link. Table A.2.1-1 lists the messages sent between the host computer and the MicroNova.

The MicroNova output to the Advisory Display RS-232 Port throughout each simulation run. This RS-232 port was connected to a switching box that permitted the test conductor to select the AID display, the Smith/Collins display or no advisory display at all.

The 29-byte message that was ouput at a rate of once per second (1 Hz) could contain information on up to three intruding aircraft in addition to own aircraft performance data. Figure A.2.1.1 depicts the advisory message byte definition.

When a PA, TA and/or RA alert occurred one or more of the twelve lines from the MicroNova to the TCAS Lamp Driven Unit were activated. The ten least significant lines corresponded to the ten TCAS/IVSI director lamps. The other two lines signaled TA's and PA's. Table A.2.1.2 lists the valid message/bit combinations.

Table A.2.1-1. Summary of Host-to-BEU Simulation Unit Message Formats

Description	Word number	Word definition	Scaling	Range	Units	BEU simulation unit receiving modes
Initiate intruder Message No. 1	1	Start of message		0A05 (HEX)		Run mode only
	2	Number of bytes		4		
	3	Message ID = 1		1		
	4	Intruder ID		+(1-40)		
	5	Advisory status	Discrete			
Initialization status Message No. 2	1	Start of message		0A05 (HEX)		Reset mode only
	2	Number of bytes		8		
	3	Message ID = 2		2		
	4	BEU performance		0 to 7		
	5	AOA status	Discretes	0 or 1		
	6	T_1 (iteration)	$T_1/4$	0.25 to 4	Sec	
	7	T_2 (aid update)	$T_2/4$	0.25 to 4	Sec	
System time and simulation aircraft parameters Message No. 3	1	Start of message		0A05 (HEX)		Reset and run modes only
	2	Number of bytes		8		
	3	Message ID = 3		3		
	4	Hours		0 to 23		
	5	Minutes		0 to 59		
	6	Seconds		0 to 59		
	7	Aircraft altitude	H/50	50 to 60,000	Ft	
BEU mode commands Message No. 4	1	Start of message		0A05 (HEX)		Reset, run, and hold
	2	Number of bytes		2		
	3	Message ID = 4		4		
	4	Mode definition	Discretes			
Intruder termination status Message No. 100	1	Start of message		0A05 (HEX)		Run mode only
	2	Number of bytes		4		
	3	Message ID = 100		100		
	4	Intruder ID		1-40		
	5	Termination status		0		
Error message Message No. 101	1	Start of message		0A05 (HEX)		Run, reset, or hold modes
	2	Number of bytes		2		
	3	Message ID = 101		101		
	4	Error code		1 to 10		

BYTE ORDER	7 … 0	BIT NUMBER	
1	A 5		
2	BYTE COUNT		
3	SYSTEMTIME–hr	1	HEADER
4	SYSTEMTIME–min	2	
5	SYSTEMTIME–sec	3	
6	A0A STATUS	4	
7	BEU PERFORMANCE	5	
8	SIM A/C ALT–LS BYTE	6	
9	SIM A/C ALT–MS BYTE	7	
10	IVSI BYTES 0	8	
11	IVSI BYTES 0	9	
12	INTRDR 1 ID	1	ADVISORY FOR INTRUDER NO. 1
13	INTRDR 1 RANGE	2	
14	INTRDR 1 RANGE RATE	3	
15	INTRDR 1 REL ALT	4	
16	INTRDR 1 A0A	5	
17	INTRDR 1 CAS COMMAND	6	
18		1	ADVISORY FOR INTRUDER NO. 2
19	SAME AS BYTES	2	
20	12 TO 17	3	
21	FOR	4	
22	INTRUDER 2	5	
23		6	
24		1	ADVISORY FOR INTRUDER 3
25	SAME AS BYTES	2	
26	12 TO 17	3	
27	FOR	4	
28	INTRUDER 3	5	
29		6	

Abbreviations:

A0A	Angle of arrival
SIM A/C	Simulation aircraft
LS BYTE	Least significant byte
MS BYTE	Most significant byte
INTRDR	Intruder
CAS	Collision avoidance system
REL ALT	Relative altitude

Figure A.2.1-1. Advisory Message Byte Definition

Table A.2.1-2. Definition of Parallel Data Sent to IVSI and TAV by MicroNova.

12 BIT OUTPUT 11-bit 0	TCAS MESSAGE	Resolution advisory Number
000000000000	NO VERTICAL COMMAND	
001000000000	CLIMB–MAX RATE	1
000100000000	DESCEND–MAX RATE	2
000011110000	ZERO CLIMB	3
000011100000	CLIMB LIMIT 500 ft/min	4
000011000000	CLIMB LIMIT 1,000 ft/min	5
000010000000	CLIMB LIMIT 2,000 ft/min	6
000000001111	ZERO DESCEND	7
000000000111	DESCEND LIMIT 500 ft/min	8
000000000011	DESCEND LIMIT 1,000 ft/min	9
000000000001	DESCEND LIMIT 2,000 ft/min	10
000000011111	CLIMB FASTER THAN 500 ft/min	11
000000111111	CLIMB FASTER THAN 1,000 ft/min	12
000001111111	CLIMB FASTER THAN 2,000 ft/min	13
000011111000	DESCEND FASTER THAN 500 ft/min	14
000011111100	DESCEND FASTER THAN 1,000 ft/min	15
000011111110	DESCEND FASTER THAN 2,000 ft/min	16
000011111111	3 AND 7	17
000011101111	4 AND 7	18
000011001111	5 AND 7	19
000010001111	6 AND 7	20
000011110111	3 AND 8	21
000011100111	4 AND 8	22
000011000111	5 AND 8	23
000010000111	6 AND 8	24
000011110011	3 AND 9	25
000011100011	4 AND 9	26
000011000011	5 AND 9	27
000010000011	6 AND 9	28
000011110001	3 AND 10	29
000011100001	4 AND 10	30
000011000001	5 AND 10	31
000010000001	6 AND 10	32
000011011111	5 AND 11	33
000010011111	6 AND 11	34
000010111111	6 AND 12	35
000011111011	9 AND 14	36
000011111001	10 AND 14	37
000011111101	10 AND 15	38
010000000000	TA, CAUTION	

Note: The ten (10) least significant bits are for RA's, bit 10 is for TA's, and bit 11 is for PA's.

A.2.2 Lamp Driver for TCAS/IVSI and TAV Unit

The Lamp Driver was was mounted in the same rack as the MicroNova and the TAV unit. It accepted inputs (12 lines) from the MicroNova and provided high voltage drive signals for the 28 volt lamps in the IVSI and the high voltage receivers in the TAV unit. Switches on the Lamp Driver gave the test conductor the option of outputing to the TCAS/IVSI and/or TAV and conducting a lights test feature.

A.2.3 TCAS Audio-Video (TAV) Unit

The TAV unit functioned as an alert controller in this study. (Figure A.2.3.1). A Zilog Z80 microprocessor monitored and prioritized incoming TCAS alert signals from the MicroNova (via Lamp Driver) and aircraft system alerts from the host computer (via Warning and Caution control console). Table A.2.1.2 lists valid TCAS alerting messages. Only three types of system alerts were recognized by the TAV unit; Warning, Caution and Advisory.

The TAV front panel has several switches for selecting alerting options and a LED display that mirrors the status of the IVSI director lamps, Figure A.2.3-2. This layout gave the test conductor the ability to easily change alerting arrangements and monitor intrusion runs.

Three alerting tones are produced by the tone generator; warning = European Siren, caution = C-Chord and advisory = Single Chime. These tones were used for TCAS and System alerts. The C-Chord had a 9 second cycle, 2 seconds on and 7 seconds off, until cancelled.

The speaker enclosure was located behind the pilots' right shoulder, Figure A.1.1-2. A microphone and preamp for the automatic gain control were also mounted in the speaker enclosure. The automatic gain control was set up to keep the aural tones about 8dB above the ambient noise. The "critical bandwidth" monitored was 300 to 2400 hertz.

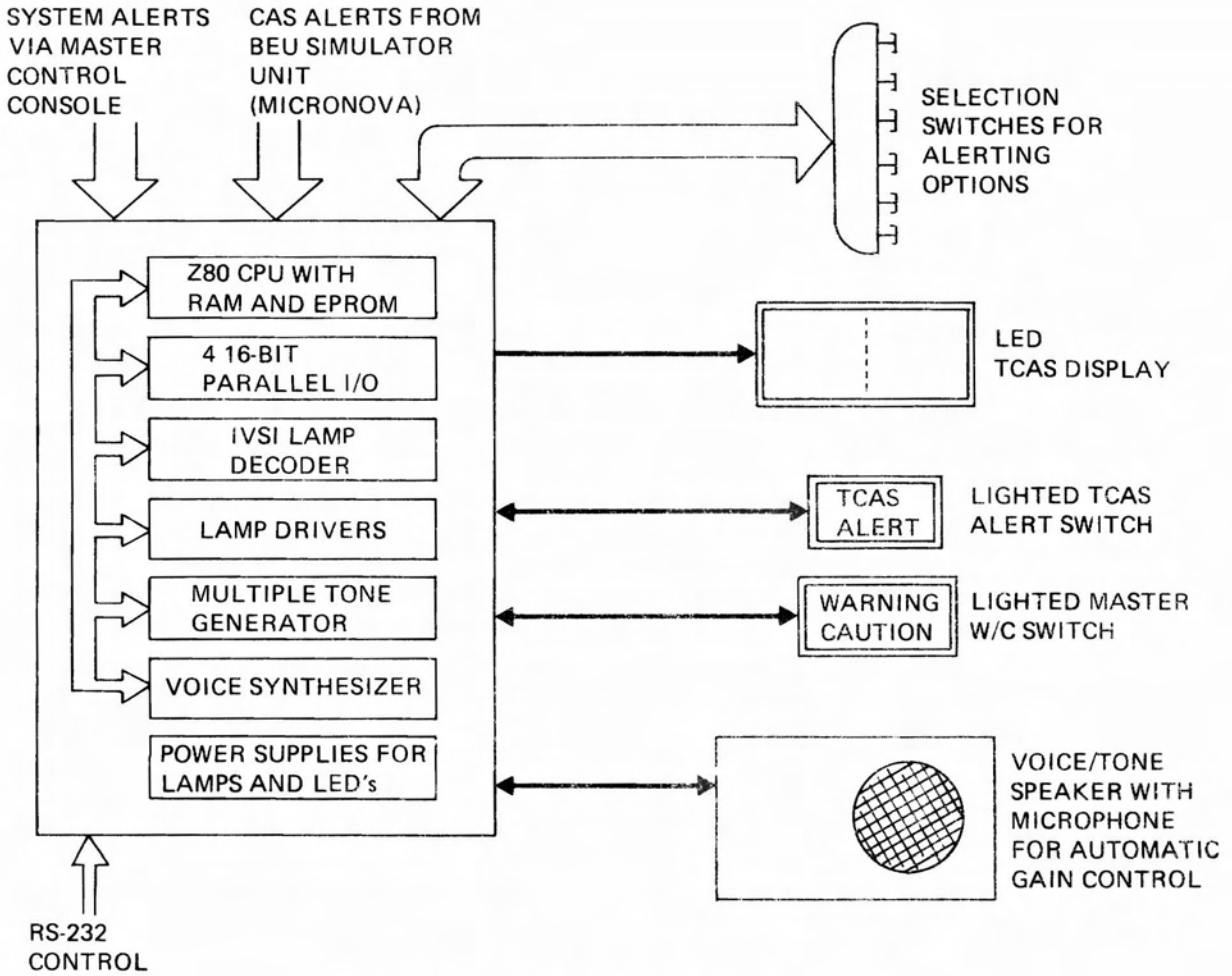

Figure A.2.3-1. TCAS Audio-Video (TAV) Unit

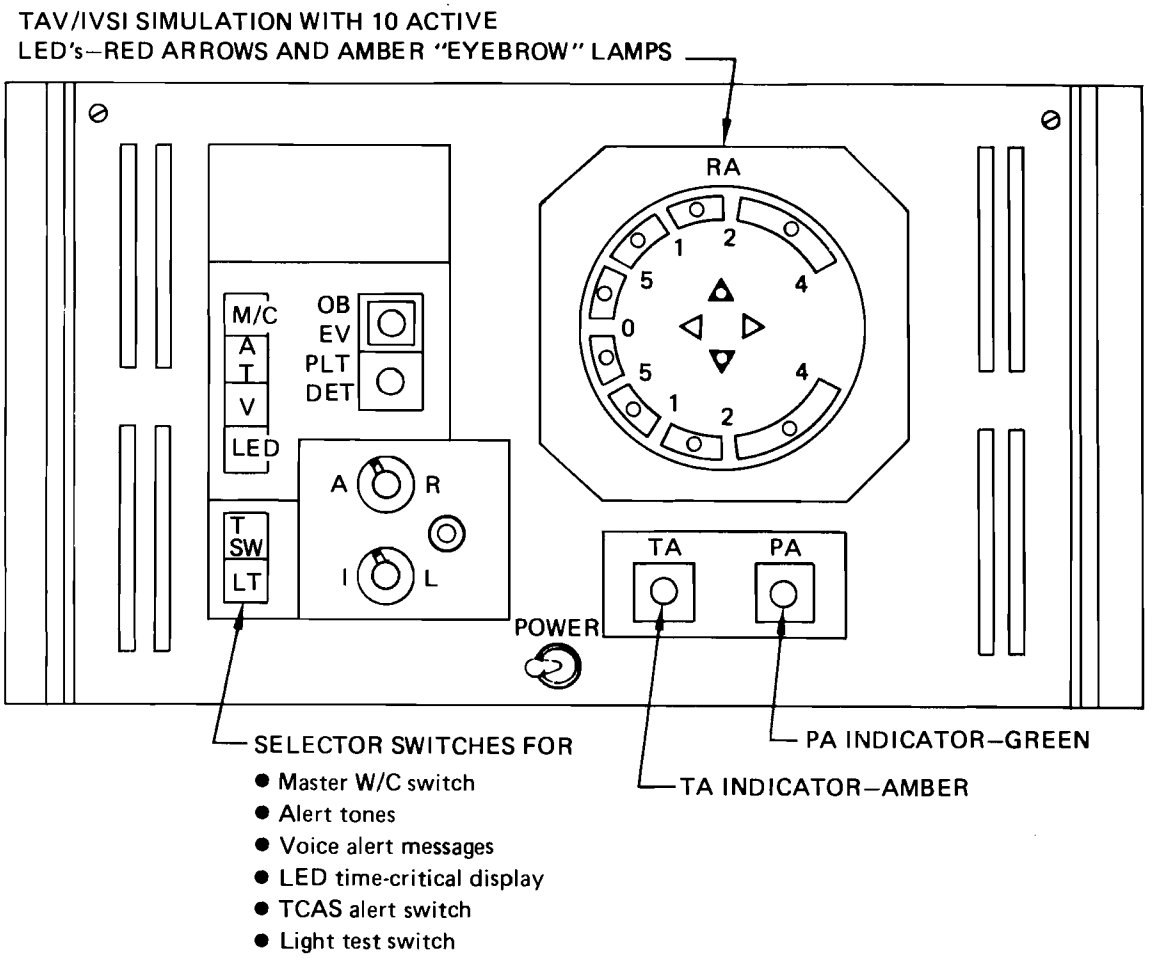

Figure A.2.3-2. TAV Front Panel Layout

A National Semiconductor voice synthesizer chip was used to produce the TCAS voice messages that are listed in Table A.2.1.2. The individual words were stored on PROM's. A total of 277 phrases, tones and pauses were available. All recordings were done by National. The complete vocabulary is listed in Table A.2.3-1.

The two lighted alerting switches were mounted on the glareshield as shown in figure A.1.1.1. The split legend Master Warning/Caution and TCAS Alert switches were controlled and sensed by the TAV unit. Both switches were also monitored by the host computer.

Figure A.2.3-3 is a block diagram of the LED TCAS display unit. The TAV unit sent an eight bit address to the LED unit to display the LED images. The bit maps for all the TCAS graphic and alphanumeric displays were stored on PROM's in the LED unit.

A.2.4 FAA CAS Advisory Display

An Airborne Intelligent Display (AID) and required support equipment were supplied by the FAA. The AID was a modified Bendix color weather radar display. A microprocessor based controller had its program stored in PROM and on power-up it initialized and assumed Tabular Display Mode. This AID was only used in tabular mode, although it had some graphic capability. A block diagram of the AID system is shown in Figure A.2.4-1.

The AID system received data from the BEU simulation unit (Micro NOVA) via RS-232 line running at 9600 baud rate. Information was transferred to the AID in formatted data blocks of up to 29 8-bit bytes once every two seconds. Each data block began with a sync byte and byte counter followed by nine byte header of own aircraft status and then up to three advisory data blocks of intruding aircraft. A data block was transferred to the AID every two seconds whether or not advisories were present. If advisories were not present nothing was displayed on the monitor. Refer to Figure A.2.4-2 for AID message byte definition.

Table A.2.3-1. Voice Vocabulary List

ONE	Q	DANGER	HAVE	NOT	SLOWER
TWO	R	DATE	HEADING	NOTICE	SMOKE
THREE	S	DAY	HELLO	NUMBER	SOUTH
FOUR	T	DE	HELP	OF	SPACE
FIVE	U	DECREASE	HERTZ	OFF	SPEED
SIX	V	DEGREE	HIGH	OHMS	SS
SEVEN	W	DEPOSIT	HIGHER	ON	STAR
EIGHT	X	DIAL	HOLD	ONWARD	START
NINE	Y	DIVIDE	HOUR	OPEN	STATION
TEN	Z	DO	IN	OPERATOR	STOP
ELEVEN	ABORT	DOLLAR	INCHES	OR	SWITCH
TWELVE	ADD	DOOR	INCORRECT	OUT	SYSTEM
THIRTEEN	ADJUST	DOWN	INCREASE	OVER	TEST
FOURTEEN	ADVISORY	EAST	INTRUDER	PARENTHESIS	TH
FIFTEEN	AGAIN	ED	IS	PASS	THAN
SIXTEEN	ALARM	EMERGENCY	IT	PER	THANK
SEVENTEEN	ALERT	END	JUST	PERCENT	THE
EIGHTEEN	ALL	ENTER	KEY	PICO	THIRD
NINETEEN	AMPERE	ENTRY	KILO	PLACE	THIS
TWENTY	AND	EQUAL	LEFT	PLEASE	TIME
THIRTY	ASK	ER	LESS	PLUS	TOTAL
FORTY	ASSISTANCE	ERROR	LESSER	POINT	TRAFFIC
FIFTY	AT	EVACUATE	LEVEL	POUND	TRY
SIXTY	ATTENTION	EXIT	LIMIT	PRESS	TURN
SEVENTY	BRAKE	FAIL	LOAD	PRESSURE	UP
EIGHTY	BUTTON	FAILURE	LOCK	PULSE	USE
NINETY	BUY	FARAD	LOW	QUARTER	UTH
HUNDRED	CALL	FAST	LOWER	RANGE	WAITING
THOUSAND	CANCEL	FASTER	MAINTAIN	RATE	WARNING
MILLION	CASE	FEET	MARK	RE	WATER
ZERO	CAUTION	FIFTH	MAXIMUM	REACH	WEIGHT
A	CENT	FIRE	MEG	READY	WEST
B	CENTI	FIRST	MEGA	RECEIVE	WINDOW
C	CHANGE	FLIGHT	METER	RECORD	YES
D	CHECK	FLOOR	MICRO	REPLACE	ZONE
E	CIRCUIT	FLOW	MILE	REVERSE	400-Hz TONE
F	CLEAR	FORWARD	MILLI	RIGHT	800-Hz TONE
G	CLIMB	FROM	MINUS	ROOM	20-ms SILENCE
H	CLOSE	FUEL	MINUTE	SAFE	40-ms SILENCE
I	COLLISION	GAS	MORE	SECOND	80-ms SILENCE
J	COMMA	GET	MOVE	SECURE	160-ms SILENCE
K	COMPLETE	GO	NEAR	SELECT	320-ms SILENCE
L	CONNECT	GOING	NEED	SEND	
M	CONTINUE	GRAM	NEXT	SERVICE	
N	CONTROL	GREAT	NO	SET	
O	COPY	GREATER	NORMAL	SIDE	
P	CORRECT	HALF	NORTH	SLOW	

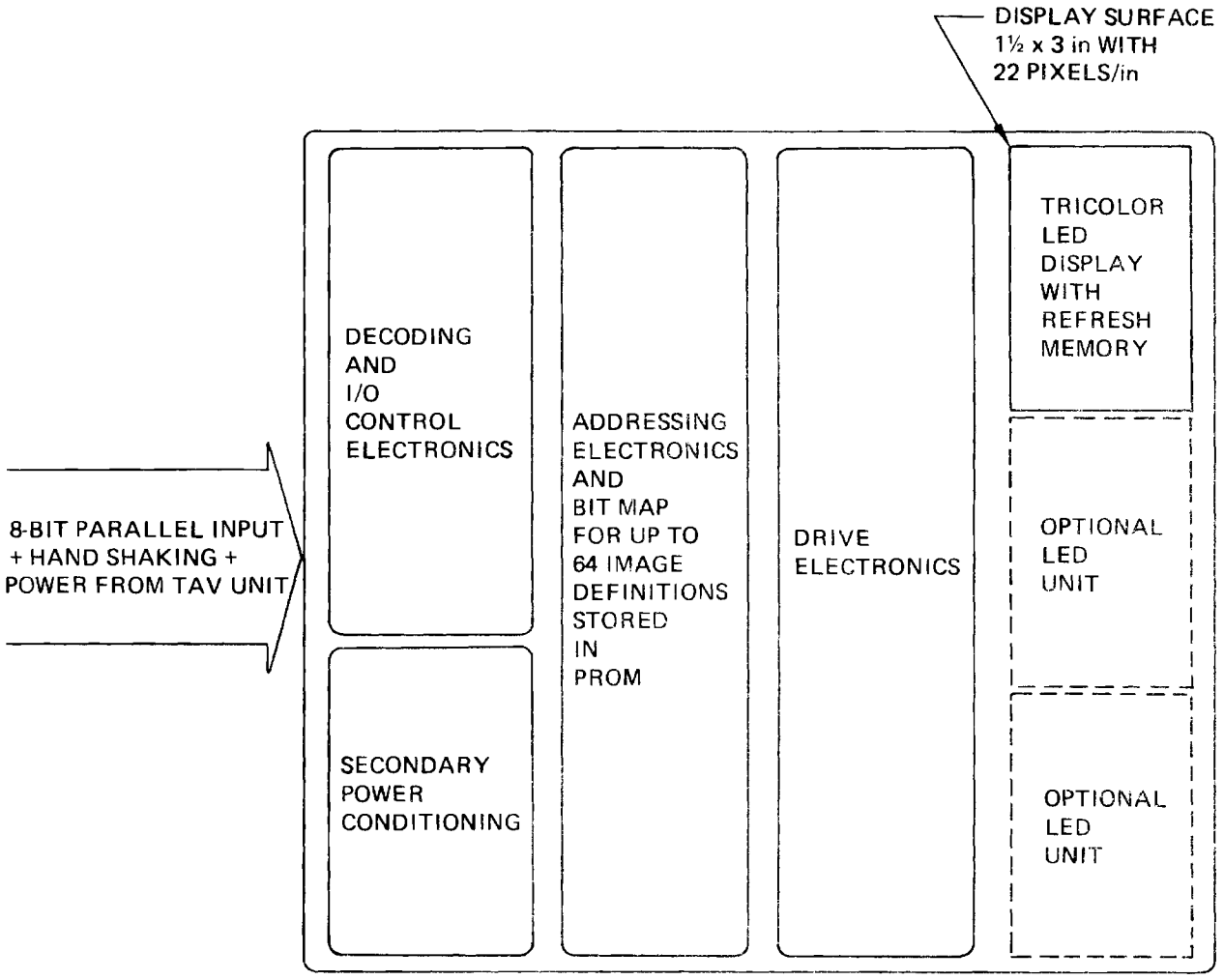

Figure A.2.3-3. Block Diagram of LED TCAS Display

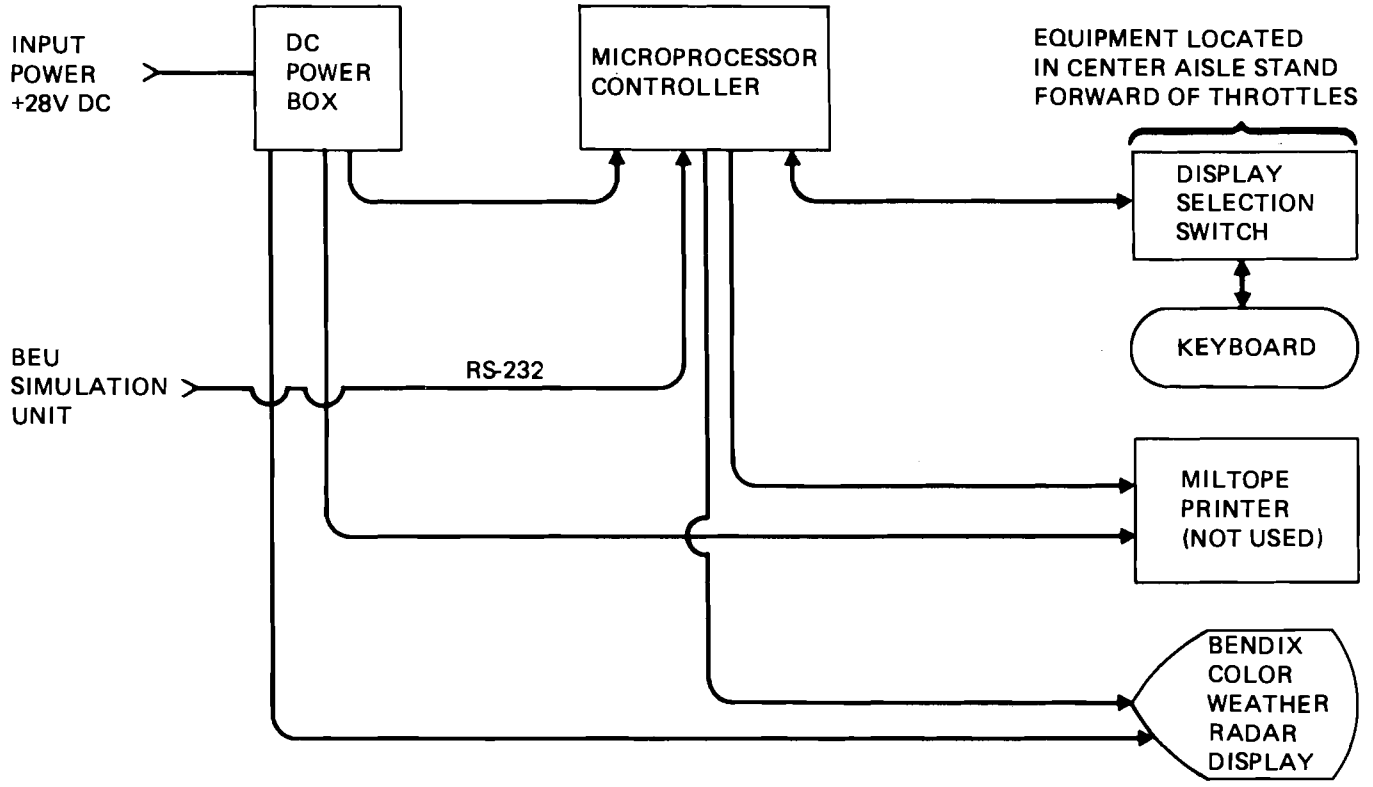

Figure A.2.4-1. Block Diagram of FAA-Supplied Airborne Intelligent Display (AID) System

BYTE ORDER	7 … 0	BIT NUMBER	
1	A 5		
2	BYTE COUNT		
3	SYSTEMTIME (hr)	1	HEADER
4	SYSTEMTIME (min)	2	
5	SYSTEMTIME (sec)	3	
6	AOA STATUS	4	
7	BEU PERFORMANCE	5	
8	SIM A/C ALT (LS BYTE)	6	
9	SIM A/C ALT (MS BYTE)	7	
10	IVSI BYTES–0	8	
11	IVSI BYTES–0	9	
12	INTRUDER–1 ID	1	ADVISORY FOR INTRUDER 1
13	INTRUDER–1 RANGE	2	
14	INTRUDER–1 RANGE RATE	3	
15	INTRUDER–1 RELATIVE ALTITUDE	4	
16	INTRUDER–1 AOA	5	
17	INTRUDER–1 CAS COMMAND	6	
18		1	ADVISORY FOR INTRUDER 2
19	SAME AS BYTES	2	
20	12 TO 17	3	
21	FOR	4	
22	INTRUDER 2	5	
23		6	
24		1	ADVISORY FOR INTRUDER 3
25	SAME AS BYTES	2	
26	12 TO 17	3	
27	FOR	4	
28	INTRUDER 3	5	
29		6	

Abbreviations:

AOA	angle of arrival
SIM A/C	simulation aircraft
LS BYTE	least significant byte
MS BYTE	most significant byte
INTRDR	intruder
CAS	collision avoidance system
REL ALT	relative altitude

Figure A.2.4-2. AID Message Byte Definition

A.2.5 GRAPHIC CAS ADVISORY DISPLAY

Graphic CAS advisories were presented on a Collins color monitor driven by a Smiths color graphics generator. The test conductor was able to select between two graphic modes. One mode was identical to the one supplied with the FAA AID. The other was an advanced graphic presentation.

The data format and bus to the Smiths graphics generator was identical to the one defined in Section A.2.4.

A.2.6 CAS/IVSI UNIT

An Intercontinental Dyanmics Corporation instantaneous vertical speed indicator (IVSI) modified with collision avoidance system director lamps was used for the tests. The IVSI analog syncro needle was driven by the host simulation computer with an analog syncro driver. The eight "eye brow" lamps and two arrows were driven by the BEU simulation unit. Refer to Figure A.2-1.

A.3 SIMULATION AUDIO AND VIDEO SUPPORT

A.3.1 Simulation Audio

A multiple tape player audio system was used to provide specific and general ATC information plus aero and engine noise. Figures A.3-1 and A.-3-2 show the audio system block diagram and equipment arrangement.

The three ATC audio cassette players and aero-engine reel-to-reel tape player were under limited control of the host computer via the Master Control Console, Section A.3.3. The aero-engine noise and ATC background audio tapes could only be started and stopped. The ATC special and ATC TCAS messages could be started by the host but they would not stop until the host signaled a stop and an end of message signal was sensed on the tapes second audio channel. This arrangement allowed the host computer to precisely start ATC messages. The tapes would stop at the end of one message and be positioned at the start of the next one.

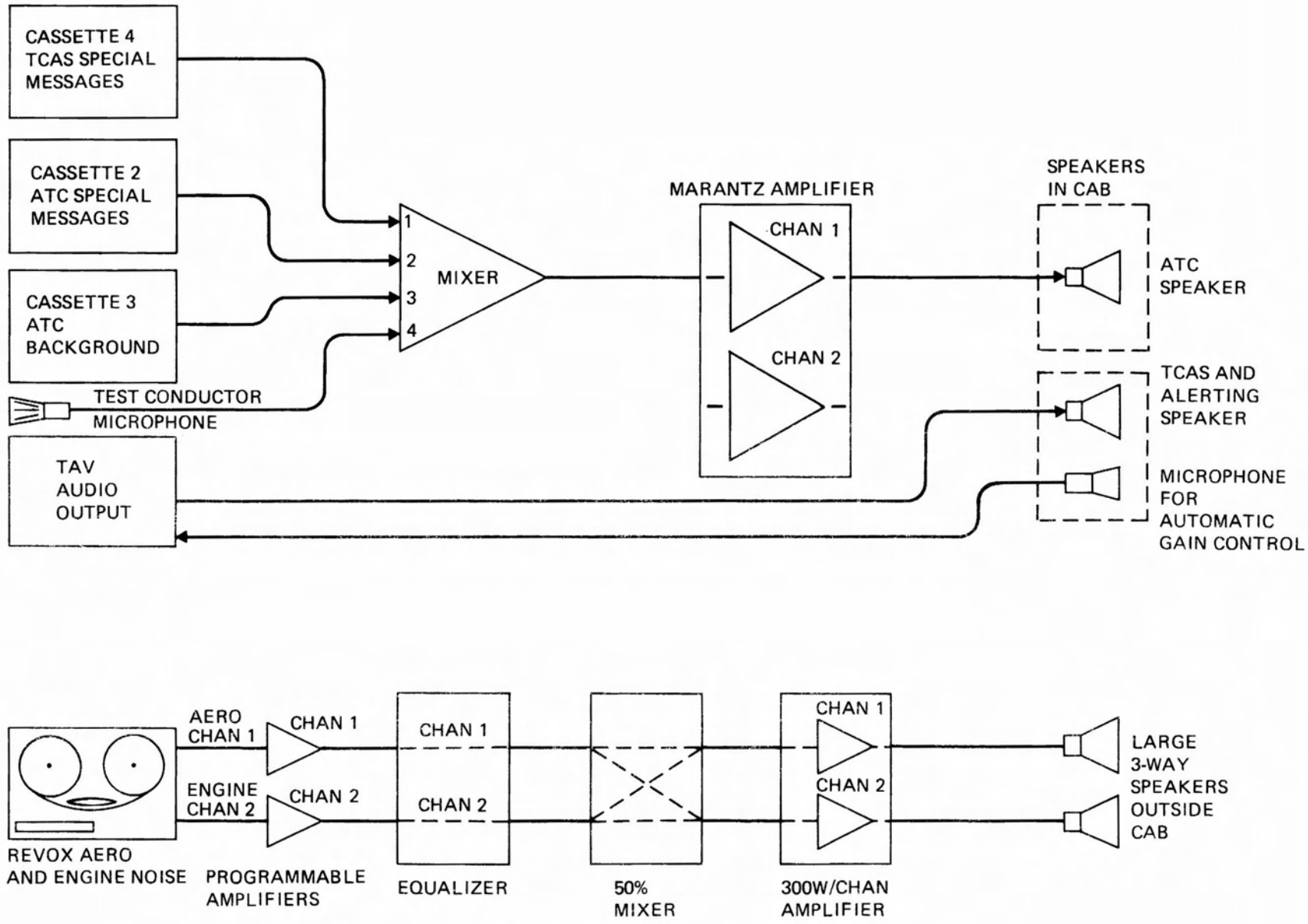

Figure A.3.1-1. Audio Equipment Block Diagram

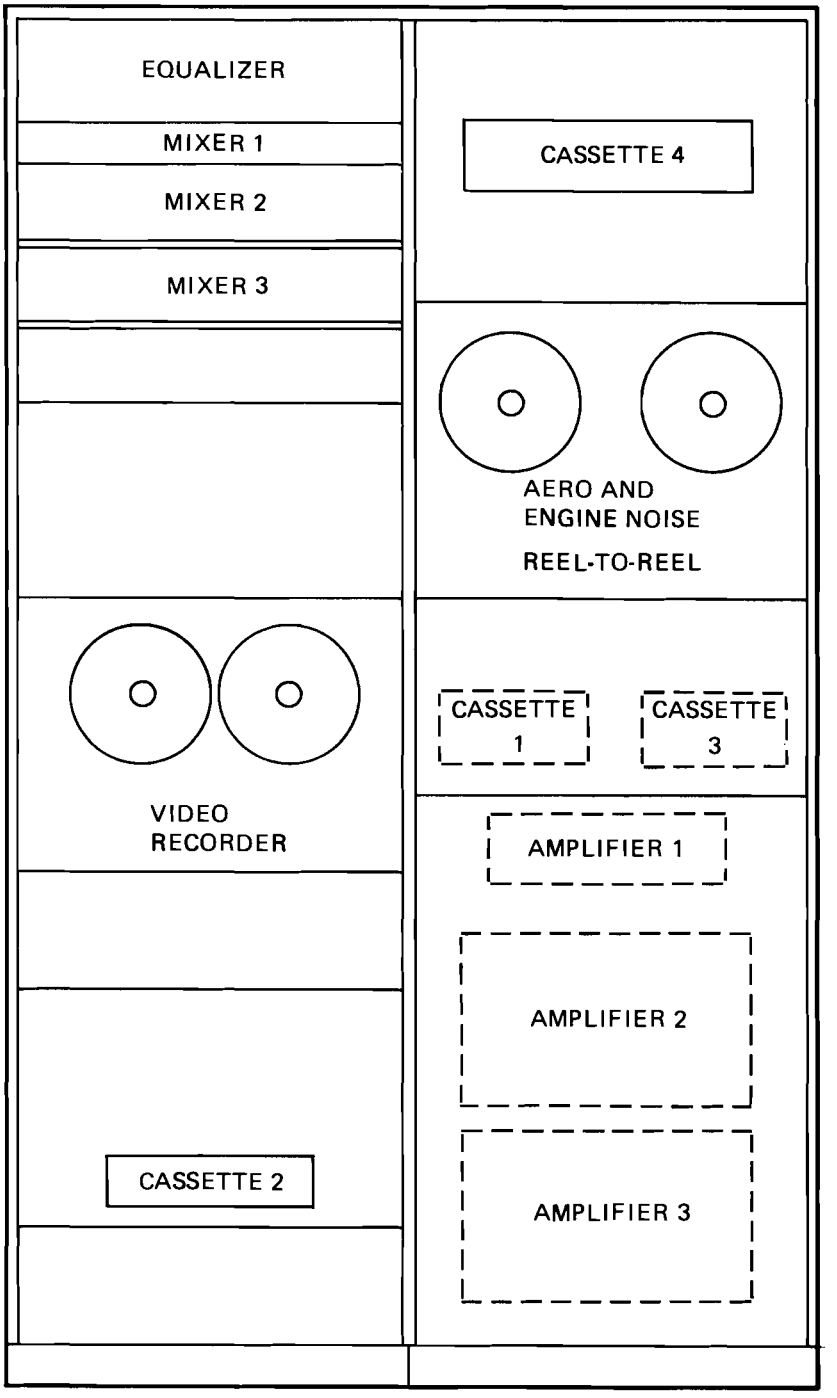

Equipment:

Audio cassette 1:	not used
Audio cassette 2:	ATC special, flightpath control
Audio cassette 3:	ATC background
Audio cassette 4:	ATC TCAS messages
Audio reel-to-reel:	aero and engine noise
Video reel-to-reel:	not used
Equalizer:	aero and engine noise
Mixer 1	ATC message mixing
Mixer 2:	not used
Mixer 3:	not used

Figure A.3.1-2. Audio Equipment Rack Layout

All the ATC audio cassettes outputs were mixed and amplified by one channel of a 60 watt per channel Morantz amplifier. A microphone input for the test conductor was also mixed with the ATC messages. This microphone was normally used before and after a mission scenario.

The aero-engine noises were output on separate channels from the reel-to-reel tape player. The host controlled the output levels of channel with programmable amplifiers. The programmable amplifiers are described in Section A.3.3. An Altec Lansing audio frequency equalizer was used to shape the aero and engine noises to make them more realistic sounding. After the equalizer, an audio mixer was used so that each of the two large speakers would have both aero-engine noises. A 300 watt per channel audio amplifier was able to boost the aero-engine noise levels to realistic volumes.

A.3.2 Simulation Visual

A moving outside visual scene was projected on a thirty foot diameter hemispherical screen in front of the cab. This scene was projected by a black and white projector that was mounted on top of the cab, directly over the pilot's head. The moving scenes were provided by a closed-circuit servo camera and "canned" visual intrusions on a video cassette player. Figure A.3.2-1 shows the video system layout.

Take-off and landing scenes were generated with the closed-circuit servo camera scanning an airport model. The intruder scenes were prerecorded on 3/4 inch video cassette. When a intrusion sequence was to start the host computer started the video player. The master control console had circuitry that would sense the end of the scene and stop the tape.

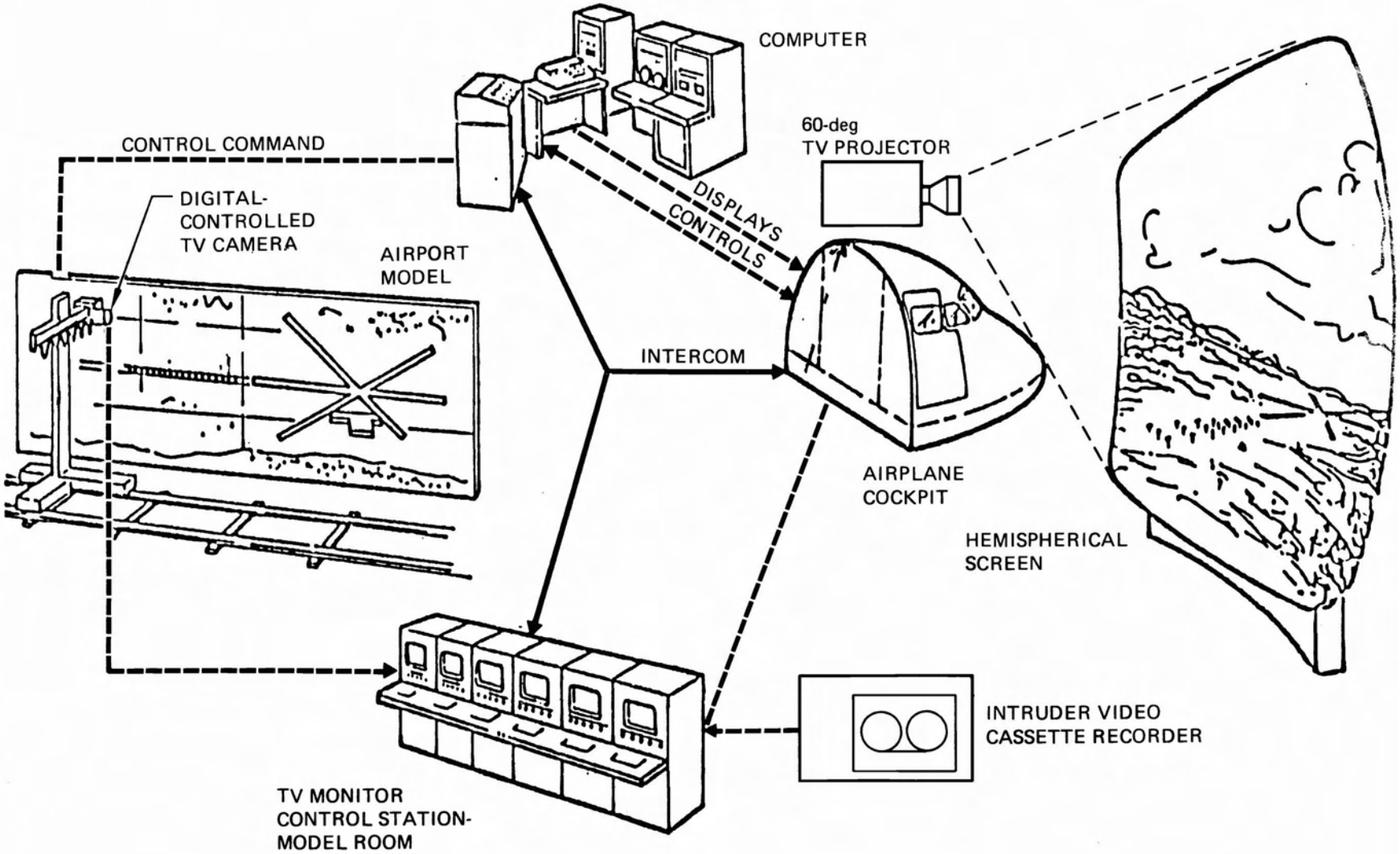

Figure A.3.2-1. Video System Layout

A.3.3 Simulation Audio and Video Control

Located next to the cab, on the main floor of the simulation room, the master conductor console provided a good view of the projection screen, the pilot station, and the audio and video equipment. Through a terminal on the console, the test conductor controlled the simulation host computer and varied simulation parameters. An intercom system permitted communication with the host computer room, the model room, and the cab. The console layout is shown in Figure A.3.3-1.

The audio equipment rack was located next to the console. Most of the audio system controls were remoted to the console, and the close proximity of the equipment rack afforded easy visual verification of actions taken. The master conductor console had an internal 16 line bus that was fed from a 16-bit interface with the host. This interface allowed the host computer to directly control the audio players, video player, three clocks, aero-engine programmable amplifiers. It also provided an interface with the TAV unit to pass aircraft system alerts. Refer to Figure A.3.3-2 for a block diagram of the interface bus. The device interfaces are defined below.

<u>Device Interface #1, Address 1 (0001B)</u>

Data Line -	0	-	slide projector direction, high = forward, low = reverse
	1	-	slide projector 1, high = enable, low = disable
	2	-	slide projector 2, high = enable, low = disable
	3	-	slide projector 3, high = enable, low = disable
	4	-	MCC, HOLD = low, RUN = high, RESET = low
	5	-	clocks low, low high
	6	-	audio cassette 1, PLAY = high, STOP = low
	7	-	audio cassette 2, PLAY = high, STOP = low
	8	-	audio cassette 3, PLAY = high, STOP = low
	9	-	audio reel, PLAY = high, STOP = low
	10	-	video cassette, PLAY Active High
	11	-	video cassette, PAUSE Active High
ADDR.	12	-	1
	13	-	0
	14	-	0
	15	-	0

Notes:
- slide projectors will not be used for TCAS study
- audio cassette 1 will play TCAS Special Messages
- audio cassette 2 will play ATC Special Messages
- audio cassette 3 will play ATC Background Communication
- audio reel will play Aero and Engine Noise

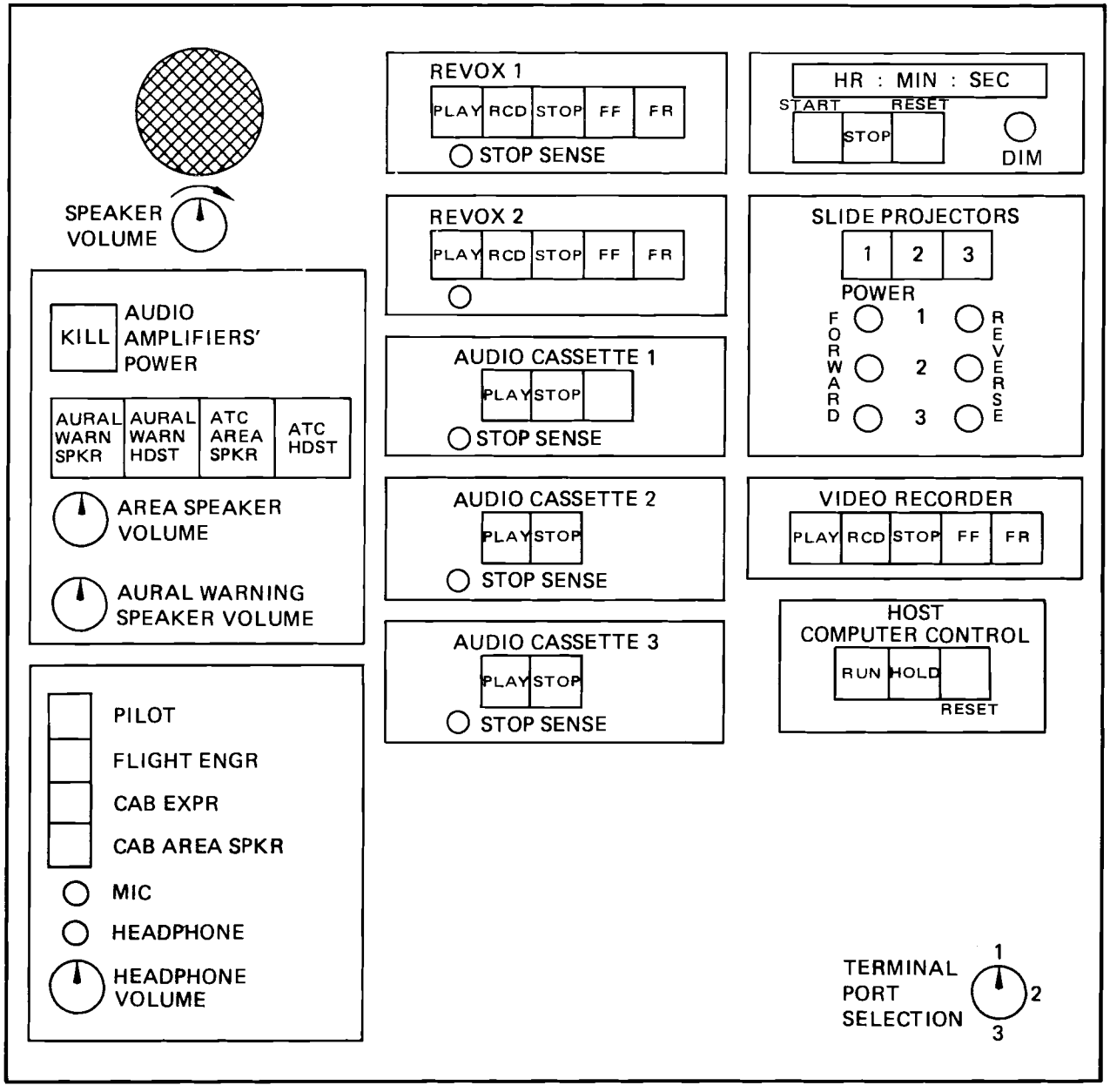

Figure A.3.3-1. Master Conductor Console Layout

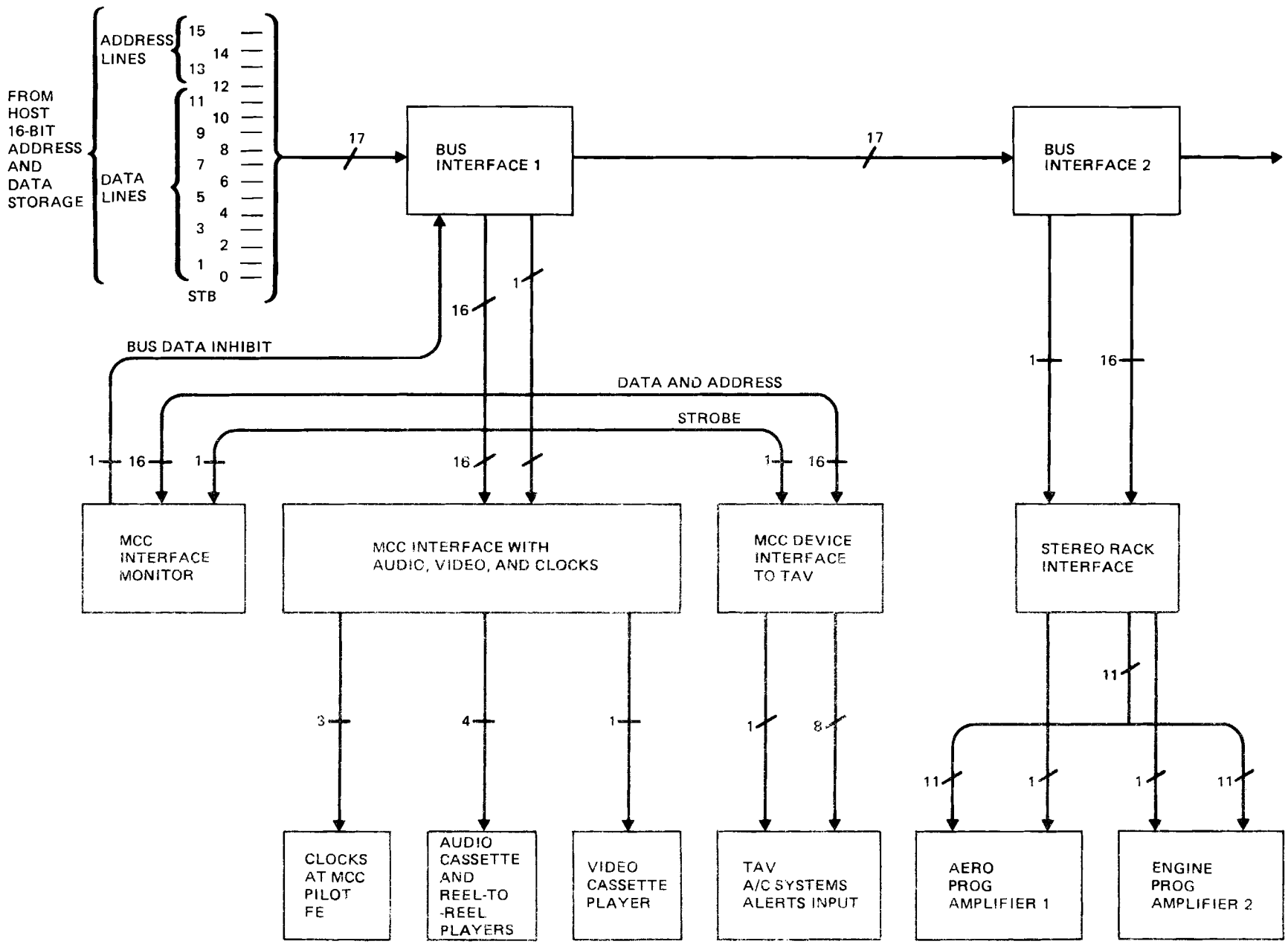

Figure A.3.3-2. System Block Diagram for Master Control Console Bus Interface

Device Interface #2, Address 2 (0010B)

This address is used to direct the TAV microprocessor or to sound the alerting tones and light the glareshield mounted master warning/caution switch. Values are latched and held until changed by host.

Data Line	0	-	master warning light, high = on, low = off
	1	-	master caution light, high = on, low = off
	2	-	warning tone, high = on, low = off
	3	-	caution tone, high = on, low = off
	4	-	advisory tone, high = on, low = off
	5	-	0
	7	-	0
	8	-	N/C
	9	-	N/C
	10	-	N/C
	11	-	N/C
ADDR.	12	-	0
	13	-	1
	14	-	0
	15	-	0

Device Interface #3, Address 3 (0011B)

This address controls the Aero and Engine Noise Programmable Amplifiers. Aero uses amp. #1 and Engine uses amp. #2. Values are latched and held until changed by the host.

Data Line	0	-	0	1
	1	-	0	1
	2	-	0	1
	3	-	0	1
	4	-	0	1 FULL ON
	5	-	0	1
	6	-	0	1
	7	-	0	1
	8	-	0	1
	9	-	0	1
	10	Sign bit - set low always		
	11	-	Amp. Selection - high = Amp 2, low = Amp 1	
	12	-	1	
	13	-	1	
	14	-	0	
	15	-	0	

A.4 HOST COMPUTER AND INTERFACING EQUIPMENT

The simulation host computer was comprised of three Varian V75 computers operating in parallel. A nine-track magnetic tape system was used to record pilot responses, flight parameters, and flight data.

All simulation equipment, including the flight instruments, were controlled by the simulation host computer through a chaining I/O controller (or chain controller). The chain controller on instruction from the host computer passed data to selected instruments (or hardware) or retrieved data from the simulator. The chain controller also interfaced with the test conductor's console and the model room. The chain controller cycled at a rate of 2.5 to 10 milliseconds. Maximum usage brought it down to 10 milliseconds per cycle. Therefore, the maximum delta between a pilot's or flight engineer's action and the notation of that action was approximately one one-hundredth of a second.

APPENDIX B

PILOT TRAINING CHECKLIST

PILOT BRIEFING CHECKLIST

I. INTRODUCTION

1. Background

a. This is an FAA program that develops a systematic approach to collision avoidance systems.
b. The program is a two-phase effort, this is the first phase.
c. This first phase evaluates elements of the potential TCAS alerting system.
d. The second phase will place a candidate system in an operational simulator.

You will participate in these tests, as well as the operational tests. Eventually, a system will go on to flight test aboard an FAA 727.

2. Phase 1 objectives

a. Evaluate TCAS display technology for both conventional and electronic flight decks.
b. Validate voice only as a viable command display.
c. Determine the effect on the pilots response performance of adding threat advisory alert(s).
d. Evaluate the effect of adding range and altitude to the threat advisory information.
e. Evaluate the effect of adding bearing to the threat advisory information.
f. Investigate the effect of presenting threat advisories which do not progress to avoidance maneuver commands.

II. FLIGHT TASK

1. Active displays
a. EADI, HUD (if installed)
b. HSI/DME/course arrow

c. Airspeed

d. Altimeter

e. Vertical speed/resolution advisory display

f. Clock

g. Alert display(s)

h. Engine instruments

i. Flaps

j. 12 key

k. LED resolution advisory display

l. AID traffic advisory display

m. CRT traffic advisory display

2. Active controls

a. Wheel and column

b. Rudder and toe brake

c. Speed brake

d. Flaps

e. Gear

f. Fire handles

g. Response switches

h. 12 key

i. Throttles

3. Flight path

a. Takeoff

b. Climb-cloud layer - VFR on top

c. Cruise

d. Descent-cloud layer - 280' ceiling

e. Land

f. Turns

g. Autothrottle

h. Windshear

i. Updates

4. ATC

a. Flight path direction

b. Traffic annunciation

III. CREW ALERTING

1. Advanced system displays
   a. Information (systems/AID/CRT)
   b. Master visual
   c. Master aural
   d. Voice alerts
   e. Time critical (LED/IVSI)
   f. EADI/HUD change

2. Conventional system display (not used in this test)
   a. Distributed alerts
   b. Annunciator panel
   c. Discrete tones

3. Alert response
   a. Flight management responses
   b. System management responses
   c. Collision avoidance responses

4. Review alerts and responses

IV. TRAINING FLIGHTS

1. Airplane familiarization flight
   a. Review handling
   b. Introduce ATC guidance
   c. Familiarization with flight plan
   d. Familiarization with visual encounters

2. TCAS system familiarization
   a. Review possible alerts
   b. Review responses

APPENDIX C

POST FLIGHT QUESTIONNAIRES

POST-FLIGHT QUESTIONNAIRE (IVSI)

Please complete the following questions with respect to the BCAS configuration that you flew with on your last flight. Use the Comments section freely since your input is important to the development of useful recommendations. Also use the Comments section to enumerate any operational difficulties you foresee with this TCAS configuration.

Pilot: _____ Date: _____

TCAS Configuration: _____

_____

1. In general, were the actions required by the commands clear and unambiguous?

Always	Usually	Sometimes	Seldom	Never
75%	25%	____	____	____

Comments: _____

_____

_____

2. Did the use of colors help in interpreting the command display?

Very much	Some	Very little	None
33%	42%	17%	8%

Comments: _____

_____

_____

3. Did the modification of the IVSI by addition of command lights detract from the primary purpose of the instrument?

YES	NO
8%	92%

Comments: _____

4. Did the command display contain TOO MUCH or TOO LITTLE information; that is, was the display too busy or not informative enough?

About right 83%

Add the following: How much and how fast, use TCAS light more _____

_____

Delete the following: _____

_____

Comments: _____

_____

_____

5. Did the display and/or command cause you to make larger than normal (.25G to 1000 fpm) vertical accelerations?

Always	Usually	Sometimes	Seldom	Never
___	17%	50	8%	25%

Comments: _____

_____

_____

6. Did the master alert(s) enhance or detract from system effectiveness?

Greatly Enhance	Enhance	No Effect	Detract	Greatly Detract
17%	50%	25%	8%	

Comments: _____

_____

_____

In the space below please describe any difficulties you had during the flight and/or with the TCAS equipment. Also use the space to give any overall comments on the TCAS display(s) and information presentation.

POST-FLIGHT QUESTIONNAIRE (LED)

Please complete the following questions with respect to the BCAS configuration that you flew with on your last flight. Use the Comments section freely since your input is important to the development of useful recommendations. Also use the Comments section to enumerate any operational difficulties you foresee with this TCAS configuration.

Pilot: _____ Date: _____

TCAS Configuration: _____

_____

1. In general, were the actions required by the commands clear and unambiguous?

Always	Usually	Sometimes	Seldom	Never
25%	50	17%	8%	____

Comments: Limit Commands difficult to read

_____

_____

2. Did the use of colors help in interpreting the command display?

Very much	Some	Very little	None
17%	66%	____	17%

Comments: _____

_____

_____

3. Did the command display contain TOO MUCH or TOO LITTLE information; that is, was the display too busy or not informative enough?

About right 42%

Add the following: 8% add rate information

Delete the following: 50% too busy, make graphics more simple

Comments:

4. Did the display and/or command cause you to make larger than normal (.25G to 1000 fpm) vertical accelerations?

Always	Usually	Sometimes	Seldom	Never
___	8%	75%	___	17%

Comments:

5. Did the master alert(s) enhance or detract from system effectiveness?

Greatly Enhance	Enhance	No Effect	Detract	Greatly Detract
17%	83%	___	___	___

Comments:

In the space below please describe any difficulties you had during the flight and/or with the TCAS equipment. Also use the space to give any overall comments on the TCAS display(s) and information presentation.

POST-FLIGHT QUESTIONNAIRE (VOICE)

Please complete the following questions with respect to the TCAS configuration that you flew with on your last flight. Use the Comments section freely since your input is important to the development of useful recommendations. Also use the Comments section to enumerate any operational difficulties you foresee with this TCAS configuration.

Pilot: _____ Date: _____

TCAS Configuration: _____

_____

1. In general, were the actions required by the commands clear and unambiguous?

Always	Usually	Sometimes	Seldom	Never
50%	50%	____	____	____

Comments: Without visual, voice/should stay on until problem is saved.

_____

_____

2. Did the command display contain TOO MUCH or TOO LITTLE information; that is, was the display too busy or not informative enough?

About right 25%

Add the following: 75% voice should stay on, need visual

_____

Delete the following: _____

_____

Comments: _____

_____

_____

3. Were the voice alerts ever interfered with by other communication?

Always	Usually	Sometimes	Seldom	Never
___	___	33%	17%	50%

Comments: _____

4. Did the display and/or command cause you to make larger than normal (.25G to 1000 fpm) vertical accelerations?

Always	Usually	Sometimes	Seldom	Never
___	25%	50%	8%	17%

Comments: _____

5. Did the master alert(s) enhance or detract from system effectiveness?

Greatly Enhance	Enhance	No Effect	Detract	Greatly Detract
17%	50%	17%	8%	8%

Comments: _____

In the space below please describe any difficulties you had during the flight and/or with the TCAS equipment. Also use the space to give any overall comments on the TCAS display(s) and information presentation.

POST-FLIGHT QUESTIONNAIRE (CURRENT GRAPHIC)

Please complete the following questions with respect to the TCAS configuration that you flew with on your last flight. Use the Comments section freely since your input is important to the development of useful recommendations. Also use the Comments section to enumerate any operational difficulties you foresee with this TCAS configuration.

Pilot: _____ Date: _____

TCAS Configuration: _____

_____

1. Were the traffic advisories presented in time to be effectively used?

Always	Usually	Sometimes	Seldom	Never
64%	36%	___	___	___

Comments: _____

_____

_____

2. Were the traffic advisories as useful as current ATC traffic advisories?

More useful	About as useful	Seldom as useful	Never as useful
64%	27%	9%	___

Comments: _____

_____

_____

3. How did the advisories affect your workload as compared to current ATC advisories?

Unacceptable increase in workload	Acceptable increase in workload	No effect on workload	Small decrease in workload	Large decrease in workload
___	73%	9%	9%	9%

Comments: Much easier than tabular, looking at screen breaks up scan

4. Do you feel the threat display would help you locate traffic you would not normally see?

Always	Usually	Sometimes	Seldom	Never
___	64%	36%	___	___

Comments: _____

5. Do you feel that the master caution alert was necessary to draw your attention to the threat display?

Always	Usually	Sometimes	Seldom	Never
27%	55%	18%	___	___

Comments: _____

6. Was the graphic format clear and unambiguous?

Always	Usually	Sometimes	Seldom	Never
27%	55%	18%	___	___

Comments: _____

7. Was there too much or too little information provided by the graphic format?

About right 73%

Add the following: 27% system accuracy, predicted track

Delete the following: _____

Comments: Suggest use of another symbol for the intruder because the triangle seems to indicate direction of movement

8. Did the use of color in the display aid you in interpreting the message?

Very much	Some	Very little	None
____	9%	73%	18%

Comments: _____

9. Were you able to use the graphic presentation of the traffic advisories to anticipate the evasive maneuver?

Always	Usually	Sometimes	Seldom	Never
9%	55%	27%	9%	____

Comments: _____

In the space below please describe any difficulties you had during the flight and/or with the TCAS equipment. Also use the space to give any overall comments on the TCAS display(s) and information presentation.

POST-FLIGHT QUESTIONNAIRE (NEW GRAPHIC)

Please complete the following questions with respect to the TCAS configuration that you flew with on your last flight. Use the Comments section freely since your input is important to the development of useful recommendations. Also use the Comments section to enumerate any operational difficulties you foresee with this TCAS configuration.

Pilot: _____ Date: _____

TCAS Configuration: _____

_____

1. Were the traffic advisories presented in time to be effectively used?

Always	Usually	Sometimes	Seldom	Never
82%	18%	___	___	___

Comments: _____

_____

_____

2. Were the traffic advisories as useful as current ATC traffic advisories?

More useful	About as useful	Seldom as useful	Never as useful
64%	27%	9%	___

Comments: _____

_____

_____

3. How did the advisories affect your workload as compared to current ATC advisories?

Unacceptable increase in workload	Acceptable increase in workload	No effect on workload	Small decrease in workload	Large decrease in workload
___	64%	9%	27%	___

Comments: _____

4. Do you feel the threat display would help you locate traffic you would not normally see?

Always	Usually	Sometimes	Seldom	Never
18%	45%	37%	___	___

Comments: Possibility of misidentification exists

5. Do you feel that the master caution alert was necessary to draw your attention to the threat display?

Always	Usually	Sometimes	Seldom	Never
18%	64%	9%	___	9%

Comments: Do not need three levels, visual and aural should come oN at the same time

6. Was the graphic format clear and unambiguous?

Always	Usually	Sometimes	Seldom	Never
36%	36%	27%	___	___

Comments: Prediction vector added unnecessary clutter

7. Was there too much or too little information provided by the graphic format?

About right 91%

Add the following: 9% instruder's speed

Delete the following: _____

Comments: _____

8. Were you able to read the tabular information fast enough?

Always	Usually	Sometimes	Seldom	Never
9%	26%	64%		

Comments: _____

9. Were you able to use the tabular data to anticipate the evasive maneuver?

Always	Usually	Sometimes	Seldom	Never
	64%	36%		

Comments: _____

In the space below please describe any difficulties you had during the flight and/or with the TCAS equipment. Also use the space to give any overall comments on the TCAS display(s) and information presentation.

POST-FLIGHT QUESTIONNAIRE (TABULAR WITHOUT BEARING)

Please complete the following questions with respect to the TCAS configuration that you flew with on your last flight. Use the Comments section freely since your input is important to the development of useful recommendations. Also use the Comments section to enumerate any operational difficulties you foresee with this TCAS configuration.

Pilot: _____ Date: _____

TCAS Configuration: _____

_____

1. Were the traffic advisories presented in time to be effectively used?

Always	Often	Sometimes	Seldom	Never
45%	36%	19%	____	____

Comments: _____

_____

_____

2. Were the traffic advisories as useful as current ATC traffic advisories?

More useful	About as useful	Seldom as useful	Never as useful
9%	36%	36%	18%

Comments: Update rate very distracting

_____

_____

_____

3. How did the advisories affect your workload as compared to current ATC advisories?

Unacceptable increase in workload	Acceptable increase in workload	No effect on workload	Small decrease in workload	Large decrease in workload
27%	64%	___	9%	___

Comments: Too much interpretation, multiple alerts impossible

4. Do you feel the threat display would help you locate traffic you would not normally see?

Always	Usually	Sometimes	Seldom	Never
___	___	91%	9%	___

Comments:

5. Do you feel that the master caution alert was necessary to draw your attention to the threat display?

Always	Usually	Sometimes	Seldom	Never
36%	46%	9%	___	9%

Comments: Chime is inadquate

6. Did the tabular data provide a clear and unambiguous representation of the threat?

Always	Usually	Sometimes	Seldom	Never
9%	9%	36%	9%	36%

Comments: Too hard to "picture" where the traffic is. Colors were more important than the actual data

7. Was there too much or too little information provided by the tabular format?

About right 27%

Add the following: 73% add bearing

Delete the following: _____

Comments: Do not like update rate

8. Were you able to read the tabular information fast enough?

Always	Usually	Sometimes	Seldom	Never
___	54%	27%	9%	9%

Comments: _____

9. Were you able to use the tabular data to anticipate the evasive maneuver?

Always	Usually	Sometimes	Seldom	Never
27%	18%	54%	___	___

Comments: Especially difficult with multiple intruders

In the space below please describe any difficulties you had during the flight and/or with the TCAS equipment. Also use the space to give any overall comments on the TCAS display(s) and information presentation.

POST-FLIGHT QUESTIONNAIRE (TABULAR WITH BEARING)

Please complete the following questions with respect to the TCAS configuration that you flew with on your last flight. Use the Comments section freely since your input is important to the development of useful recommendations. Also use the Comments section to enumerate any operational difficulties you foresee with this TCAS configuration.

Pilot: _____ Date: _____

BCAS Configuration: _____

_____

1. Were the traffic advisories presented in time to be effectively used?

Always	Usually	Sometimes	Seldom	Never
55%	36%	9%	___	___

Comments: Multiple intruders difficult _____

_____

_____

2. Were the traffic advisories as useful as current ATC traffic advisories?

More useful	About as useful	Seldom as useful	Never as useful
18%	73%	___	9%

Comments: _____

_____

_____

3. How did the advisories affect your workload as compared to current ATC advisories?

Unacceptable increase in workload	Acceptable increase in workload	No effect on workload	Small decrease in workload	Large decrease in workload
27%	64%	____	9%	____

Comments: Time consuming interpretation _____

_____

_____

4. Do you feel the threat display would help you locate traffic you would not normally see?

Always	Usually	Sometimes	Seldom	Never
____	54%	27%	18%	

Comments: _____

_____

5. Do you feel that the master caution alert was necessary to draw your attention to the threat display?

Always	Usually	Sometimes	Seldom	Never
55%	27%	18%	____	____

Comments: _____

_____

_____

6. Did the tabular data provide a clear and unambiguous representation of the threat?

Always	Usually	Sometimes	Seldom	Never
9%	36%	45%	____	9%

Comments: _____

_____

7. Was there too much or too little information provided by the graphic format?

About right 91%

Add the following: 9% direction of intruder vertical motion

Delete the following: _____

Comments: Multiple intruders could not be understood

8. Were you able to read the tabular information fast enough?

Always	Usually	Sometimes	Seldom	Never
9%	27%	64%	____	____

Comments: _____

9. Were you able to use the tabular data to anticipate the evasive maneuver?

Always	Usually	Sometimes	Seldom	Never
____	64%	36%	____	____

Comments: _____

In the space below please describe any difficulties you had during the flight and/or with the TCAS equipment. Also use the space to give any overall comments on the TCAS display(s) and information presentation.

APPENDIX D

DEBRIEFING QUESTIONNAIRE

Observer No._____

TRAFFIC ALERT AND COLLISION AVOIDANCE SYSTEM (TCAS)
FLIGHT CREW QUESTIONNAIRE

Name: _____

Company: _____ Age: _____

Present Position: _____ Aircraft: _____

Pilot Certificate(s) Held: _____

Total Hours: _____ Past Year: _____

In the space below, identify the types of aircraft you have flown. Put a 1 above the aircraft type you have flown most recently, a 2 above the next, and so on.

42%	83%	50%	17%	8%	33%	25%	8%	_____
(B-707)	(B-727)	(B-737)	(B-747)	(DC-8)	(DC-9)	(DC-10)	L-1011)	(Other)

Do you regularly fly into TCA's?

YES 100% NO _____
(approximately _____ times a year)
(which airports? _____)

Were you familiar with the TCAS program prior to your solicitation or selection to participate in this experiment?

YES 67% _____ NO 17% _____ VAGUELY 17% _____

Comments concerning TCAS: _____

_____

_____

Please complete the following questionnaire, answering the questions with your present views on aircraft separation in general and the Traffic Alert and

Collision Avoidance System (TCAS) specifically. Although the comments are optional, they can provide a valuable contribution to the test program. Comments may be used to expand upon or qualify your initial answer, or to note that the question is not framed in a manner which allows your true opinion to be expressed. Therefore, please use the Comments sections liberally to ensure proper interpretation of your answers. If you are not familiar with certain aspects of the TCAS, please answer the question and indicate in the Comments section your reservations. If you comment exceeds the space provided please continue it on the back of the page or on a separate piece of paper (be sure to number the continuation with the question number). In this section of the questionnaire there are two types of questions: The first is multiple choice in which you should select the answer that most closely matches your opinion. Secondly, there are the open-ended questions asking for a written response. Please answer these completely. Remember there is no right or wrong answer; your thoughts are important.

1. In general, do you feel that a collision avoidance system should be

___ a. Required on all aircraft immediately.

75% b. Required on all aircraft as soon as it can be implemented and demonstrated to perform reliably.

___ c. Required on all aircraft in the terminal area only.

___ d. Required on all aircraft above or below certain altitude (indicate altitude _____).
above below

8% e. Required on air carrier aircraft only.

8% f. Implemented as soon as it can be tied to the ATC system to provide total traffic control.

8% g. Not required.

Comments: Used as a back-up for ATC. System should be reliable, economically reasonable and compatible with ATC.

2a. Please rank all the display configurations that you flew during the test (1 = most preferred to 3 = least preferred.

1	IVSI AND VOICE
2	LED AND VOICE
3	VOICE ONLY

2b. Please rank all the threat advisory (TA) display formats that you observed (1 = most preferred to 6 = least preferred).

6	None
2.6	Precursor Light
4.4	Tabular without Angle of Arrival
3.2	Tabular with Angle of Arrival
2.3	Minimum Graphic
1.5	Advanced Graphic

2c. Are there any displays or formats that you would add? If so please describe them and give a rank relative to the above.

2d. What display or combination of displays would you like to see used by the TCAS system?

TCAS light plus IVSI (45%) advanced graphic plus IVSI (55%) could use EADI on new aircraft

3a. Rank the following items in relative importance for accurate resolution of a conflict (1 = most important, 18 = least important).

	Rank	Check if the item is essential
Altitude of other aircraft	1.8	100%
Heading of other aircraft	6.4	25%
Relative bearing	3.1	75%
Range of other aircraft	3.5	75%
Other aircraft type	16.8	
Vertical speed of other aircraft	8.7	17%
Horizontal closure rate	6.4	17%
Vertical closure rate	7.6	17%
Closure angle	9.7	
Other aircraft identify	17.1	
Projected miss distance horizontal	9.2	
Projected miss distance vertical	9.5	
Direction of miss (e.g., passing to left)	12.7	
Time to closest approach	9.5	17%
Turning/not turning status of intruder	9.5	8%
Whether or not the intruder is TCAS equipped	12.4	
Airspeed of intruder	11	
If intruder is ATC controlled	12.4	

Comments: _____

3b. Are there any other items of information that you would like to have in a conflict situation? If so please describe them and indicate if they are essential.

Direction of vertical movement (42%)

4a. Do you feel that both corrective (climb) and restrictive (don't descend) commands are necessary or useful?

	CORRECTIVE	RESTRICTIVE
Unnecessary		25%
Useful	8%	42%
Necessary	92%	33%

4b. Do you feel that both types of command have equal operational criticality?

Corrective more critical	Both the same criticality	Restrictive more critical
67%	33%	

4c. In your opinion, what is the best presentation format for the corrective command alerts (e.g., alphanumeric, arrows, pictorial, etc.)?

Arrow plus voice (100%)

4d. What is the best presentation format for restrictive commands?

Bars/vertical speed plus voice (92%), voice (8%)

Comments: All guidance should be positive

5. It has also been proposed the TCAS use "maintenance" alerts in conjunction with the "command" alerts. Do you feel that both maintenance (maintain climb faster than 1000 fpm) and command alerts are necessary and why?

Yes	No
67%	33%

Explain: _____

_____

_____

6. In general, were the actions indicated by the commands during the test flights clear and unambiguous?

ALWAYS	USUALLY	SOMETIMES	SELDOM	NEVER
25%	58%	17%	____	____

Comments: _____

_____

_____

7. Do you feel that the commands used in the test gave you sufficient time to react?

ALWAYS	USUALLY	SOMETIMES	SELDOM	NEVER
58%	42%	____	____	____

Comments: _____

_____

_____

8. Did you agree with the command given?

ALWAYS	USUALLY	SOMETIMES	SELDOM	NEVER
8%	92%	____	____	____

Comments: When a pilot anticipates the command and it is different he will be reluctant.

9a. Did the display and/or command cause you to make larger than briefed (.25G excersion to 1000 fpm) vertical accelerations?

ALWAYS	USUALLY	SOMETIMES	SELDOM	NEVER
8%	8%	33%	25%	17%

Comments: Should have a motion base or a G meter

9b. What changes in format should be made to the IVSI to improve system performance?

Lights are too bright, add horizontal arrows, indicate required climb rate

9c. What changes should be made in the LED display?

Too busy, move to glareshield

9d. What changes should be made in the voice?

Clarify limit command

10. Does the modification of the IVSI by addition of command lights detract from the primary purpose of the instrument?

YES	NO
8%	92%

Comments: _____

11a. Does the use of color on the command display help in interpreting the information presented?

VERY MUCH	SOME	VERY LITTLE	NONE
67%	25%	___	8%

Comments: _____

12a. There have been two ways defined to present the horizontal separation between your aircraft and an intruder. The first is by time (TAU) which takes into account not only range but also closure rate. The second is the actual range (distance to the intruder). Which information would you prefer?

Time	Range	No Preference	Other
42%	42%	___	17%

12b. Was the scale used in the test satisfactory?

Very Satisfactory	Satisfactory	Borderline	Unsatisfactory	Very Unsatisfactory
8%	67%	25%	___	___

Comments: Combine both time and range

13. The current collision avoidance system prescribes only vertical evasive maneuvers. If technology would permit, do you feel that horizontal maneuver should also be included and if so when would they be most useful - e.g., where and what speeds etc.?

YES 92% NO 8%

Comments: Avoid altitude crosses, when vertical change is inappropriate when given a hard altitude, in high density

14. Since the present system provides only vertical resolution advisory commands, how useful is the inclusion of vertical speed on the TCAS Command Display?

Extremely Useful	Useful	Of No Use	Detrimental	Extremely Detrimental
33%	50%	___	17%	___

Comments: Will be part of the maneuver so should be located in the same place?

15. Do you feel that the master visual warning was needed in addition to the master aural to draw your attention to the TCAS alerts?

ALWAYS	USUALLY	SOMETIMES	SELDOM	NEVER
25%	50%	8%	8%	8%

Comments:

16. How well do you feel the master aircraft aural alert drew your attention to the TCAS alerts?

Excellent No Changes	Good Minor Changes Beneficial	Fair Minor Changes Recommended	Poor Major Changes Recommended	Unacceptable Major Changes Required	Not Needed
33%	58%	___	8%	___	___

Comments: TCAS light very beneficial, aural must coincide with the visual

17. Are both a master aural and master visual needed to ensure TCAS alert detection under all environmental conditions (noise, light, decompression, etc.) on the flight deck?

YES 83% NO 17%

Comments:

18a. In addition to the command alerts (RA) do you feel that some form of caution alert (traffic advisory), which would preceed most RAs, would benefit TCAS?

VERY MUCH	SOME	VERY LITTLE	NONE
67%	33%	___	___

18b. If you feel these would be a benefit please explain.

Takes startle effect away, prepares crew for possible action. Builds analogical sequence.

18c. What elements would have to be added to the traffic advisory to make it an essential part of the system?

None (light only), more time.

18d. What traffic should be displayed on the threat display (TA)?

33% Only threats as defined by the TCAS algorithms.

33% TCAS threats with an option to display surrounding traffic.

33% TCAS threats with surrounding traffic displayed automatically when a threat is present.

____ All surrounding traffic displayed with some filtering logic used to reduce the number.

____ All surrounding traffic displayed.

____ Others - explain.

19. If the traffic advisories (TA) contain only altitude and range information of the threat aircraft would they still be considered an essential part of a TCAS?

VERY MUCH	SOME	VERY LITTLE	NONE
33%	17%	17%	33%

Comments:

20a. How useful do you feel the TCAS threat display will be in each flight phase?

	Very Useful	Moderately Useful	Not Useful	Undesirable
Takeoff	___	50%	17%	33%
Climb	58%	17%	8%	17%
Cruise	58%	8%	17%	17%
Descent	58%	17%	8%	17%
Approach	58%	8%	17%	17%
Landing	8%	50%	8%	33%

Comments: _____

20b. During the test flights you saw both tabular and graphic formats for the visual threat display, do you feel that the format will have an effect on the displays utilization with respect to flight phase? If so please explain.

Graphic best (100%), neither is too useful (42%)

21. In the test flights were the traffic advisories presented in time to be useful?

ALWAYS	USUALLY	SOMETIMES	SELDOM	NEVER
42%	58%	___	___	___

Comments: _____

22. What is the maximum number of traffic advisories that you believe you could monitor simultaneously while attending flight duties? _____

Comments: As few as possible

23. How helpful was the intruder's angle of arrival (AOA) or bearing in using the traffic advisory alerts?

Excellent No Changes	Good Minor Changes Beneficial	Fair Minor Changes Recommended	Poor Major Changes Recommended	Unacceptable Major Changes Required	Not Needed
58%	25%	17%	____	____	____

Explain: Will let you know when visual acquistiion is not possible

24. What type of presentation do you feel was most appropriate for the traffic advisories? (Please rank 1 = most, 7 = least)

None	Precursor light	Tabular without angle-of-arrival	Tabular with angle-of-arrival	Minimum graphics	Advanced graphics	Both tabular and graphics
7	3/5	5.1	4.1	2.2	1.4	4.7

Comments: _____

25. When all factors are considered, how would you describe the value of TA's with bearing compared to TA's without bearing?

92% Much better with bearing

8% Better with bearing

____ About the same - pro's and con's balance

____ Less valuable with bearing

____ Much less valuable - bearing is detrimental

Comments: _____

26. Were the traffic advisories as useful as verbal advisories from ATC?

MUCH MORE USEFUL	MORE USEFUL	ABOUT AS USEFUL	SELDOM AS USEFUL	NEVER AS USEFUL
8%	58%	8%	25%	____

Comments: _____

27. Did the use of colors on a threat display (Red for resolution alerts (warnings), amber for traffic advisories (caution) and Blue for a proximate advisory) help you in interpreting the threat information?

Very much	Some	Very little	None
83%	17%	____	____

Comments: Particularly at transition points

28a. Should the altitude of the intruder aircraft be given and if so in what form?

Altitude Information not Required	MSL	Relative to own Altitude
___	25%	75%

28b. In what intervals should the altitude information be given?

a.	one foot	___
b.	ten foot	___
c.	hundred foot	92%
d.	thousand foot	8%

Comments: _____

29. During the test flights were you able to visually acquire the intruder aircraft by correlating it (them) with the advisory present?

ALWAYS	USUALLY	SOMETIMES	SELDOM	NEVER
___	___	___	___	100%

Comments: Never saw the intruder

30a. Do you feel that the master caution alert was necessary to draw your attention to the traffic advisories?

ALWAYS	USUALLY	SOMETIMES	SELDOM	NEVER
8%	67%	17%	8%	___

Comments: _____

30b. Do you feel that this feature of the master caution is desirable?

ALWAYS	USUALLY	SOMETIMES	SELDOM	NEVER
42%	33%	25%	___	___

Comments: Concerned with high density activation too frequently

30. Were you able to use the traffic advisory information to anticipate the direction of the evasive maneuver?

ALWAYS	USUALLY	SOMETIMES	SELDOM	NEVER
___	58%	25%	8%	8%

Comments: _____

31. In general what do you feel about the amount of information provided by the threat display (PWI)?

75% about right _____

18% too little, add to the following critical movement of intruder

8% too much, delete the following _____

Comments: _____

32a. During the test, the intruder aircraft symbol on the threat display went away when the threat was resolved. How useful would it be if the display remained active after your maneuver to show where the target aircraft went?

Extremely Useful	Useful	Of No Use	Detrimental	Extremely Detrimental
17%	17%	67%	___	___

32b. If you feel that a delay would be useful, how long should the target remain on the screen? Pilot option, as long as it is in range, 5-10 seconds

Comments: _____

32c. Do you feel that pilots with automated threat advisories will become complacent and devote insufficient time to visual scanning for non-transponder equipped aircraft?

ALWAYS	USUALLY	SOMETIMES	SELDOM	NEVER
___	50	17	17	17

Comments: Significant challange in crew training

33. Assuming you have a command display for warnings and a threat display with bearing information, will you be concerned about maneuvering into other traffic during the escape maneuver?

ALWAYS	USUALLY	SOMETIMES	SELDOM	NEVER
25%	8%	33%	33%	___

Comments: _____

34a. If a pilot visually acquires the aircraft which he believes is causing an RA can you think of any situations which would result in the plot concluding that the RA is unnecessary? If so what are they?

System unreliability acquire the wrong target, parallel approach holding pattern, visual illusions

34b. Would the pilot be justified in not following the RA in these situations? Why or why not? No (67%) Only if he can be sure it is false, if he elects to use a horizontal maneuver, crews should be trained to follow the RA

34c. What influence does the type of TA service being provided have on your responses to these questions?

None - an RA command is a command, must be reliable, with graphics pilot may have more confidence in the RA

35. Do you feel that knowing the intruders position (altitude, range and approximate bearing) with a traffic advisory would provide enough advance information to allow you to minimize the anticipated deviation from your planned flight path?

ALWAYS	USUALLY	SOMETIMES	SELDOM	NEVER
8%	50%	33%	8%	___

Comments:

36. Do you feel that knowing the intruders position (altitude, range and approximate bearing) with a traffic advisory would provide enough information for you to begin making minor course, speed or altitude changes BEFORE making visual contact to avoid getting a maneuver command?

ALWAYS	USUALLY	SOMETIMES	SELDOM	NEVER
___	33%	58%	8%	___

Comments: Also need heading

37. What effect would the TCAS have on your confidence when overflying/ underflying another aircraft by 1000 feet?

INCREASE CONFIDENCE	NO CHANGE	LESS CONFIDENCE
67%	33%	___

Comments: If it works, if it is wrong one time confidence is gone

38a. Do you feel that use of TCAS could allow reduced vertical traPfffic separation?

MUCH REDUCED	SOMEWHAT REDUCED	NO REDUCTION	INCREASED SEPARATION
___	25%	75%	___

Comments: Only above FL 290

38b. Reduced Horizontal Traffice Separation?

MUCH REDUCED	SOMEWHAT REDUCED	NO REDUCTION	INCREASED SEPARATION
____	33%	67%	

39. Do you feel that the TCAS will result in more or less communication with ATC?

MUCH LESS	SOMEWHAT LESS	NO CHANGE	SOMEWHAT MORE	MUCH MORE
8%	33%	17%	42%	____

Comments: _____

40. Do you feel that a reliable TCAS will result in safer operations in respect to midair collisions?

MUCH SAFER	SOMEWHAT SAFER	NO CHANGE	SOMEWHAT LESS SAFE	MUCH LESS SAFE
58%	42%	____	____	____

Comments: Key is reliability, probably to the same extent that GPWS prevents collision with the ground

41. What changes would be required in aircraft and ATC operating procedures if TCAS were implemented?

Comments: RAs should be automatically transmitted, who has priority on conflicting information between alert and ATC, ATC should not rely on TCAS, Emergency authority to break clearance

SEMANTIC DIFFERENTIAL INSTRUCTIONS

The semantic differential gives us a way to judge pilot opinions of the TCAS in a systematic fashion. You can help by checking the degree to which your opinion falls between each of these 21 adjective pairs.

An example may help. Suppose we ask you to judge "politics" on the following scale:

GOOD [ ][ ][ ][ ][ ][ ][ ] BAD

If you feel that politics are very good, then you should check the box nearest that adjective. If you feel that politics are bad, then your check mark should be in one of the right-hand boxes. If your opinion is neutral, neither positive nor negative, check the center box.

There are no "right" or "wrong" answers; we are simply asking your opinion. Don't be hesitant to check the far left or far right boxes if you feel strongly about the concept. It's better that you don't change a check mark once it is made; your first opinion may be most valid.

Both positive and negative adjectives may appear on either right or left sides, so consider each pair carefully before you make the check mark.

Using the following descriptors, judge the TCAS IVSI command display and its operational uses as you currently know them.

CLEAR		CONFUSING
DEMANDING		UNDEMANDING
LIMITED		VERSATILE
DESIRABLE		UNDESIRABLE
UNTRUSTWORTHY		TRUSTWORTHY
COMPLEX		SIMPLE
ASSISTANCE		HINDRANCE
VALUABLE		WORTHLESS
NONESSENTIAL		ESSENTIAL
COMPLETE		INCOMPLETE
NATURAL		UNNATURAL
EASY		DIFFICULT
HAZARDOUS		SAFE
TIMELY		UNTIMELY
UNACCEPTABLE		ACCEPTABLE
UNBURDENING		BURDENING
STARTLING		UNOBTRUSIVE
INFORMATIVE		UNINFORMATIVE
INDISTINCTIVE		DISTINCTIVE
RELIABLE		UNRELIABLE
ACCURATE		INACCURATE

Using the following descriptors, judge the TCAS LED command display and its operational uses as you currently know them.

CLEAR		CONFUSING
DEMANDING		UNDEMANDING
LIMITED		VERSATILE
DESIRABLE		UNDESIRABLE
UNTRUSTWORTHY		TRUSTWORTHY
COMPLEX		SIMPLE
ASSISTANCE		HINDRANCE
VALUABLE		WORTHLESS
NONESSENTIAL		ESSENTIAL
COMPLETE		INCOMPLETE
NATURAL		UNNATURAL
EASY		DIFFICULT
HAZARDOUS		SAFE
TIMELY		UNTIMELY
UNACCEPTABLE		ACCEPTABLE
UNBURDENING		BURDENING
STARTLING		UNOBTRUSIVE
INFORMATIVE		UNINFORMATIVE
INDISTINCTIVE		DISTINCTIVE
RELIABLE		UNRELIABLE
ACCURATE		INACCURATE

Using the following descriptors, judge the TCAS voice command display and its operational uses as you currently know them.

CLEAR		CONFUSING
DEMANDING		UNDEMANDING
LIMITED		VERSATILE
DESIRABLE		UNDESIRABLE
UNTRUSTWORTHY		TRUSTWORTHY
COMPLEX		SIMPLE
ASSISTANCE		HINDRANCE
VALUABLE		WORTHLESS
NONESSENTIAL		ESSENTIAL
COMPLETE		INCOMPLETE
NATURAL		UNNATURAL
EASY		DIFFICULT
HAZARDOUS		SAFE
TIMELY		UNTIMELY
UNACCEPTABLE		ACCEPTABLE
UNBURDENING		BURDENING
STARTLING		UNOBTRUSIVE
INFORMATIVE		UNINFORMATIVE
INDISTINCTIVE		DISTINCTIVE
RELIABLE		UNRELIABLE
ACCURATE		INACCURATE

Using the following descriptors, judge the TCAS tabular display and its operational uses as you currently know them.

CLEAR		CONFUSING
DEMANDING		UNDEMANDING
LIMITED		VERSATILE
DESIRABLE		UNDESIRABLE
UNTRUSTWORTHY		TRUSTWORTHY
COMPLEX		SIMPLE
ASSISTANCE		HINDRANCE
VALUABLE		WORTHLESS
NONESSENTIAL		ESSENTIAL
COMPLETE		INCOMPLETE
NATURAL		UNNATURAL
EASY		DIFFICULT
HAZARDOUS		SAFE
TIMELY		UNTIMELY
UNACCEPTABLE		ACCEPTABLE
UNBURDENING		BURDENING
STARTLING		UNOBTRUSIVE
INFORMATIVE		UNINFORMATIVE
INDISTINCTIVE		DISTINCTIVE
RELIABLE		UNRELIABLE
ACCURATE		INACCURATE

Using the following descriptors, judge the TCAS graphic (minimum) display and its operational uses as you currently know them.

CLEAR		CONFUSING
DEMANDING		UNDEMANDING
LIMITED		VERSATILE
DESIRABLE		UNDESIRABLE
UNTRUSTWORTHY		TRUSTWORTHY
COMPLEX		SIMPLE
ASSISTANCE		HINDRANCE
VALUABLE		WORTHLESS
NONESSENTIAL		ESSENTIAL
COMPLETE		INCOMPLETE
NATURAL		UNNATURAL
EASY		DIFFICULT
HAZARDOUS		SAFE
TIMELY		UNTIMELY
UNACCEPTABLE		ACCEPTABLE
UNBURDENING		BURDENING
STARTLING		UNOBTRUSIVE
INFORMATIVE		UNINFORMATIVE
INDISTINCTIVE		DISTINCTIVE
RELIABLE		UNRELIABLE
ACCURATE		INACCURATE

Using the following descriptors, judge the TCAS graphic (advanced) display and its operational uses as you currently know them.

CLEAR		CONFUSING
DEMANDING		UNDEMANDING
LIMITED		VERSATILE
DESIRABLE		UNDESIRABLE
UNTRUSTWORTHY		TRUSTWORTHY
COMPLEX		SIMPLE
ASSISTANCE		HINDRANCE
VALUABLE		WORTHLESS
NONESSENTIAL		ESSENTIAL
COMPLETE		INCOMPLETE
NATURAL		UNNATURAL
EASY		DIFFICULT
HAZARDOUS		SAFE
TIMELY		UNTIMELY
UNACCEPTABLE		ACCEPTABLE
UNBURDENING		BURDENING
STARTLING		UNOBTRUSIVE
INFORMATIVE		UNINFORMATIVE
INDISTINCTIVE		DISTINCTIVE
RELIABLE		UNRELIABLE
ACCURATE		INACCURATE

SYSTEM DISPLAY DESIGN

In the following space please design the TCAS display(s) that you would put into the flight deck. Design a command display for a conventional and one for an electronic flight deck. Provided for your information are the alerts which this display must present at a minimum. Along with your design please give the location of the display in the instrument panel. Then design the information presentation that you would like to see on the threat display. Again please describe its location. Use the back side of the papers to continue your display description if you require more space.

In order to standardize the responses to this section of the questionnaire it will be necessary to use the smae prescribed alert situations and the same scenarios to illustrate your recommended threat/display relationship. We will consider two situations, one requiring a vertical command and one requiring a limit command.

(1) Vertical Command

(a) Scenario: Own aircraft is straight and level at 300 kts at 15000 ft. Threat alert aircraft is coming from 10 o'clock position and is initally 2000 ft below and 6 nmi away. This results in a closure rate of 480 knots. The threat is climbing such that it will collide which gives a climb rate of about 2600 fpm. The total length of time from start to potential collision is 45 seconds.

(b) Command: The vertical resolution advising command will be a climb command with a desired 1/4 G pullup to 1000 fpm rate of climb.

(2) Limit Command

(a) Scenario: Own aircraft is straight and descending at 2000 fpm, 250 kts, passing 10000 ft. Threat aircraft is coming from 2 o'clock, it is at your altitude and also descending at 2000 fpm. Again, you are on collision trajectories, 45 seconds from impact. Assume a closure rate of 200 kts which places you initially at 2.5 miles apart.

(b) Command: Assume you are both TCAS equipped and received complementary commands. He is commanded to descend. Your command is to Limit Descent to 500 fpm. The proposed maneuver would again be a 1/4 G pullup.

THREAT DISPLAY

Description:

CONVENTIONAL COMMAND DISPLAY

Description:

ELECTRONIC FLIGHT DECK COMMAND DISPLAY

Description:

DOT/FAA
RD-82/49

Traffic alert and collision avoidance system developmental simulation / 00026863