COPY 1
RD
82
63

DOT/FAA/RD-82/63

Systems Research &
Development Service
Washington, D.C. 20591

FAA WJH Technical Center
00026853

EMC Analysis of a Prototype Civil-Use GPS Receiver on Four Aircraft Configurations

Robert L. Mullen

IIT Research Institute
Under Contract to
Department of Defense

Electromagnetic Compatibility
Analysis Center
Annapolis, Md. 21402

TECHNICAL CENTER LIBRARY
ATLANTIC CITY NJ 08405

June 1982

Consulting Report

This document is available to the U.S. public through the National Technical Information Service, Springfield, Virginia 22161.

DOT/FAA
RD-82/63

U.S. Department of Transportation
Federal Aviation Administration

METRIC CONVERSION FACTORS

Approximate Conversions to Metric Measures

Symbol	When You Know	Multiply by	To Find	Symbol
		LENGTH		
in	inches	*2.5	centimeters	cm
ft	feet	30	centimeters	cm
yd	yards	0.9	meters	m
mi	miles	1.6	kilometers	km
		AREA		
in^2	square inches	6.5	square centimeters	cm^2
ft^2	square feet	0.09	square meters	m^2
yd^2	square yards	0.8	square meters	m^2
mi^2	square miles	2.6	square kilometers	km^2
	acres	0.4	hectares	ha
		MASS (weight)		
oz	ounces	28	grams	g
lb	pounds	0.45	kilograms	kg
	short tons (2000 lb)	0.9	tonnes	t
		VOLUME		
tsp	teaspoons	5	milliliters	ml
Tbsp	tablespoons	15	milliliters	ml
fl oz	fluid ounces	30	milliliters	ml
c	cups	0.24	liters	l
pt	pints	0.47	liters	l
qt	quarts	0.95	liters	l
gal	gallons	3.8	liters	l
ft^3	cubic feet	0.03	cubic meters	m^3
yd^3	cubic yards	0.76	cubic meters	m^3
		TEMPERATURE (exact)		
°F	Fahrenheit temperature	5/9 (after subtracting 32)	Celsius temperature	°C

*1 in = 2.54 (exactly). For other exact conversions and more detailed tables, see NBS Misc. Publ. 286, Units of Weights and Measures, Price $2.25, SD Catalog No. C13.10:286.

Approximate Conversions from Metric Measures

Symbol	When You Know	Multiply by	To Find	Symbol
		LENGTH		
mm	millimeters	0.04	inches	in
cm	centimeters	0.4	inches	in
m	meters	3.3	feet	ft
m	meters	1.1	yards	yd
km	kilometers	0.6	miles	mi
		AREA		
cm^2	square centimeters	0.16	square inches	in^2
m^2	square meters	1.2	square yards	yd^2
km^2	square kilometers	0.4	square miles	mi^2
ha	hectares (10,000 m^2)	2.5	acres	
		MASS (weight)		
g	grams	0.035	ounces	oz
kg	kilograms	2.2	pounds	lb
t	tonnes (1000 kg)	1.1	short tons	
		VOLUME		
ml	milliliters	0.03	fluid ounces	fl oz
l	liters	2.1	pints	pt
l	liters	1.06	quarts	qt
l	liters	0.26	gallons	gal
m^3	cubic meters	35	cubic feet	ft^3
m^3	cubic meters	1.3	cubic yards	yd^3
		TEMPERATURE (exact)		
°C	Celsius temperature	9/5 (then add 32)	Fahrenheit temperature	°F

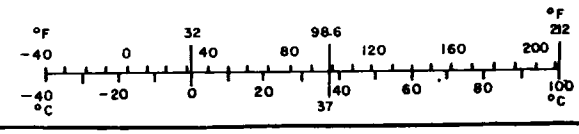

EXECUTIVE SUMMARY

The Federal Aviation Administration has requested that the DoD Electromagnetic Compatibility Analysis Center evaluate the cosite electromagnetic compatibility aspects of the simultaneous operation of a prototype civil-use Global Positioning System receiver and other avionic systems on board four specific airborne platforms, using previously developed interference criteria. The four airborne platforms included specific configurations of a Boeing 747, a Boeing 727, and two Rockwell Aerocommanders.

The analysis for each aircraft addressed the potential of interference from adjacent-signal and out-of-band transmitters. Adjacent-signal transmitters aboard the four aircraft configurations consisted of Distance Measuring Equipment interrogators, Air Traffic Control Radar Beacon System transponders, Mode S transponders, and Traffic Alert and Collision Avoidance System interrogators. The out-of-band transmitters included HF, VHF, and UHF communications equipment. The electromagnetic compatibility aspects of the GPS receiver that were examined included burnout and saturation of the limiting diode in the receiver front end, interference to signal acquisition, and interference to signal code and carrier tracking. Only radiated interference coupled from the transmit antenna to the receive antenna was examined in this analysis. Conducted interference was not considered.

For the specific configurations analyzed, no potential instances of burnout or saturation of the limiting diode due to signals from individual or multiple on-board transmitters were identified.

For the specific configurations analyzed, no potential instances were identified in which the interfering signal from an individual on-board transmitter exceeded the GPS interference thresholds.

For the specific configurations analyzed, one potential instance was identified in which the composite interfering signal from multiple on-board transmitters exceeded the GPS interference threshold for C/A signal acquisition. Alternative actions were recommended to preclude the occurrence of interference to the GPS receiver.

TABLE OF CONTENTS

Subsection	Page
SECTION 1	
INTRODUCTION	
BACKGROUND	1
OBJECTIVE	1
APPROACH	2
SECTION 2	
ANALYSIS	
GENERAL	5
ANALYSIS	10
GPS Receiver Interference Criteria	10
Adjacent-signal Interference	11
Out-of-band Transmitter Interference	12
Saturation/Burnout Calculations	13
Simultaneous Operation of Multiple Transmitters	15
SECTION 3	
CONCLUSIONS AND RECOMMENDATION	
GENERAL	17
CONCLUSIONS	17
RECOMMENDATION	18

LIST OF ILLUSTRATIONS

Figure		
1	Block diagram of the prototype civil-use GPS receiver front-end	6

TABLE OF CONTENTS (Continued)

LIST OF ILLUSTRATIONS (Continued)

Figure		Page
2	GPS receiver preamplifier selectivity	8
3	GPS receiver downconverter selectivity	9

LIST OF TABLES

Table		
1	ANTENNA MISMATCH LOSSES	14

LIST OF APPENDIXES

Appendix		
A	AVIONICS EQUIPMENT	A-1
B	GPS EMC ANALYSIS FOR THE MIT LL AEROCOMMANDER	B-1
C	GPS EMC ANALYSIS FOR THE FAA TECHNICAL CENTER BOEING 727	C-1
D	GPS EMC ANALYSIS FOR A TYPICAL BOEING 747	D-1
E	GPS EMC ANALYSIS OF THE FAA TECHNICAL CENTER AEROCOMMANDER	E-1
F	FREQUENCY-DEPENDENT REJECTION (FDR)	F-1

SECTION 1
INTRODUCTION

BACKGROUND

The Global Positioning System (GPS) is being developed by the GPS Joint Program Office of which the United States Air Force (USAF) is the lead service. It is expected to be fully operational by the mid 1980's and will consist of a system of satellite transmitters and user receivers for the purpose of ground, maritime, and aeronautical navigation. GPS uses two downlink frequency channels, L_1 and L_2, at 1575.42 MHz and 1227.6 MHz, respectively.

Navigational accuracy is dependent upon the type of receiver employed. Receivers capable of providing the most accurate positioning information will be available only to authorized users. These receivers receive both L_1 and L_2 frequency channels and process a precision (P) signal and a coarse/acquisition (C/A) signal. Receivers available to civil users will process only the C/A signal of Channel L_1 and will provide less accurate position data.

The Federal Aviation Administration (FAA) has requested that the DoD Electromagnetic Compatibility Analysis Center (ECAC) evaluate the electromagnetic compatibility (EMC) aspects of the FAA-developed experimental dual channel GPS receiver aboard four specific airborne platforms using previously developed interference criteria.

OBJECTIVE

The objective of this task was to evaluate the cosite EMC aspects of the simultaneous operation of a prototype civil-use GPS receiver and other avionic systems on board four specific aircraft configurations.

APPROACH

In this analysis, attention was directed toward potential cosite sources of interference to a prototype civil-use GPS receiver. The analysis was performed for the GPS receiver on board a Boeing 747, a Boeing 727, and two configurations of a Rockwell Aerocommander.

Information concerning antenna location and equipment characteristics for each on-board aircraft transmitter and the prototype GPS receiver was obtained from either the FAA, results of prior ECAC work, or manufacturer technical manuals.

No transmitters were identified in the four aircraft configurations that operate cochannel or in-band with the GPS receiver frequency. Therefore, the EMC analysis for each aircraft addressed the potential of interference from adjacent-signal and out-of-band transmitters. Only radiated interference coupled from the transmit antenna to the receive antenna was examined in this analysis. Conducted interference was not considered. Adjacent-signal transmitters aboard the four aircraft configurations consisted of Distance Measuring Equipment (DME) interrogators, Air Traffic Control Radar Beacon System (ATCRBS) and Mode S transponders, and Traffic Alert and Collision Avoidance System (TCAS) interrogators. The out-of-band transmitters included HF, VHF, and UHF communications equipment.

The potential of interference to the GPS receiver from adjacent-signal transmissions was considered first. The peak and average effective on-tune undesired-signal power levels that each adjacent-signal transmitter could present to the GPS receiver were calculated. The technical parameters involved in these calculations included maximum transmitter peak power, transmitter duty cycle, the gains of both the transmitter and GPS receiver antennas, frequency-dependent rejection (FDR), and the path loss due to the separation of the transmitter and receiver antennas.

The technical parameters are listed in APPENDIX A for the transmitters that were examined in this analysis. The GPS antenna gain was obtained from information provided by the FAA.[1] The GPS receiver selectivity, obtained from the Massachusetts Institute of Technology (MIT) Lincoln Laboratory (LL),[2] was used in conjunction with the transmitter emission spectrum to derive values for FDR.

FDR is the rejection experienced by the undesired emission as a result of the limited bandwidth of a receiver as well as any off-tuning of the receiver frequency with respect to the transmitter tuned frequency. For each transmitter, FDR was evaluated at the closest possible tuned frequency to the GPS receiver frequency.

Propagation losses between the transmit antennas and the GPS antenna were determined by application of either the Avionics Interference Prediction Model (AVPAK)[3] or the procedure described in an ECAC report entitled Path Loss Prediction for Irregularly Shaped Airframes.[4]

The calculated transmitter power level at the GPS receiver input was compared with interference power criteria provided by the FAA.

The HF, VHF, and UHF communication transmitters were analyzed as potential sources of harmonic and spurious-emission interference. These transmitters are multichannel and can be tuned to subharmonics of the GPS receiver frequency. Values for transmitter harmonic and spurious attenuation

---

[1] FAA/ARD-452 letter of 20 April 1981, subject: Data Items for EMC Analysis of GPS T&E Systems.

[2] MIT LL/Group 42 letter of 9 July 1981, subject: Selectivity of the FAA GPS Receiver.

[3] A Model to Predict Mutual Interference Effects On An Airframe, FAA-RD-76-50, FAA, Washington, DC.

[4] King B., Path Loss Prediction for Irregularly Shaped Airframes, ECAC-TN-76-004, ECAC, Annapolis, MD February 1976.

SECTION 2
ANALYSIS

GENERAL

The analysis that follows is general in nature and applies to all of the aircraft. Appendixes following the main body of the report relate the analysis specifically to each aircraft configuration. The MIT LL Aerocommander analysis is contained in APPENDIX B, the FAA Technical Center Boeing 727 analysis is in APPENDIX C, the analysis of the Boeing 747 is in APPENDIX D, and the FAA Technical Center Aerocommander analysis is in APPENDIX E.

Interference from aircraft search radars, Doppler radars, and radar altimeters was not analyzed in detail because the frequencies of these devices were much higher than the GPS frequency. Potential interference from the search and Doppler radars via local oscillator leakage is not possible because the GPS L1 carrier frequency is below the waveguide cutoff frequencies of the radars. Radar altimeters on these aircraft do not generate any frequency closer than approximately 1 GHz from the GPS frequency. Therefore, these three types of radar equipment will not interfere with GPS operation.

Interference caused by spurious receiver responses is not expected to occur. Spurious receiver responses arise when strong undesired signals and the receiver local oscillator signal combine in the mixer to produce a frequency on, or near, the receiver intermediate frequency. In the GPS receiver, the selectivity of the preamplifier effectively limits the number of spurious frequencies that must be considered. None of the avionics transmitters examined in this analysis produce strong undesired signals at frequencies that could cause spurious responses in the GPS receiver.

Saturation of the GPS receiver preamplifier or downconverter will not occur for the four aircraft configurations examined in this analysis. Figure 1 is a block diagram of the prototype civil-use GPS receiver front-end

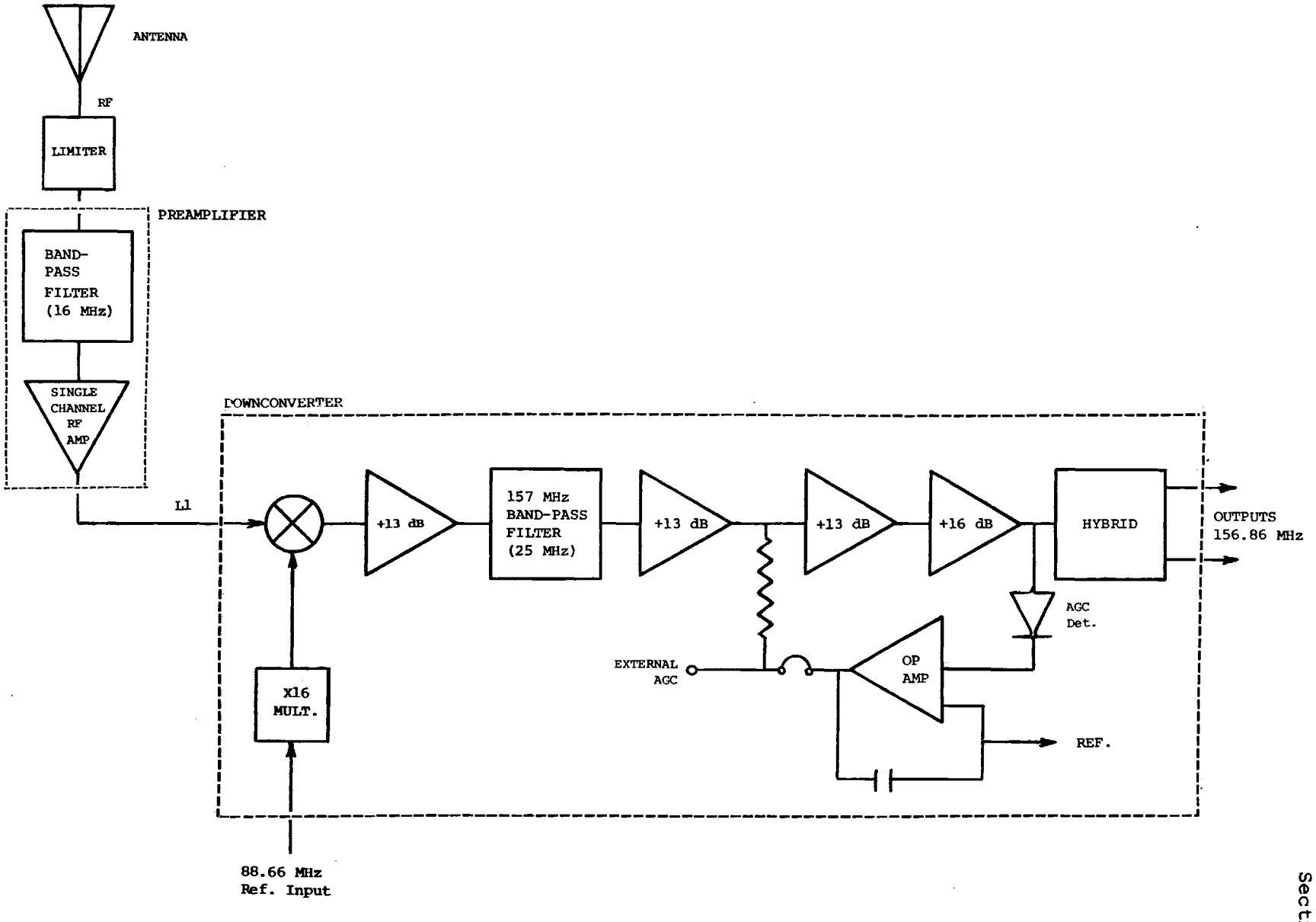

Figure 1. Block diagram of the prototype civil-use GPS receiver front-end.

obtained from Reference 2. The input power levels that will saturate the limiter, the preamplifier, and the downconverter were given in Reference 1 as +15 dBm, -38 dBm, and -45 dBm, respectively. As previously stated, there are no transmitters in the four aircraft configurations that operate in-band with the GPS receiver. The transmitters that tune closest to the GPS L1 frequency are the DME, ATCRBS, Mode S, and TCAS transmitters which are tuned 425 (min), 485, 485, and 545 MHz, respectively, below the GPS L1 frequency. In the GPS receiver preamplifier, filtering is used prior to amplification in order to select the GPS L1 signal while rejecting out-of-band interference. The selectivity of the preamplifier band-pass filter, obtained from Reference 2, is shown in Figure 2. FDR values were calculated using the preamplifier selectivity and the DME, ATCRBS, Mode S, and TCAS transmitter emission spectrums. The minimum FDR value was 68 dB. Therefore, if the interfering signal from any one of these transmitters has not saturated the limiter (i.e., $P_R \leq + 15$ dBm), then the effective interfering signal power level at the input of the preamplifier will be $I_{PA_{eff}} \leq + 15 - 68 = -53$ dBm. This is 15 dB below the preamplifier input saturation threshold of -38 dBm.

The preamplifier amplifies the GPS L1 signal by 50 dB and may increase the interfering signal too; however, the gain will be less than 50 dB. The interfering signal level at the input to the downconverter from any one of the adjacent-band transmitters will be $I_{DC} \leq -53 + 50 = -3$ dBm. The selectivity of the band-pass filter in the downconverter, obtained from Reference 2, is shown in Figure 3. FDR values were determined using the downconverter selectivity and the DME, ATCRBS, Mode S, and TCAS signal spectrums. The minimum FDR value was 64 dB. Therefore, the effective interfering signal power level at the input of the downconverter will be $I_{DC_{eff}} \leq -3 - 64 = -67$ dBm. This is 22 dB below the downconverter input saturation threshold of -45 dBm.

Therefore, for the four aircraft configurations analyzed, the preamplifier and the downconverter will not experience saturation.

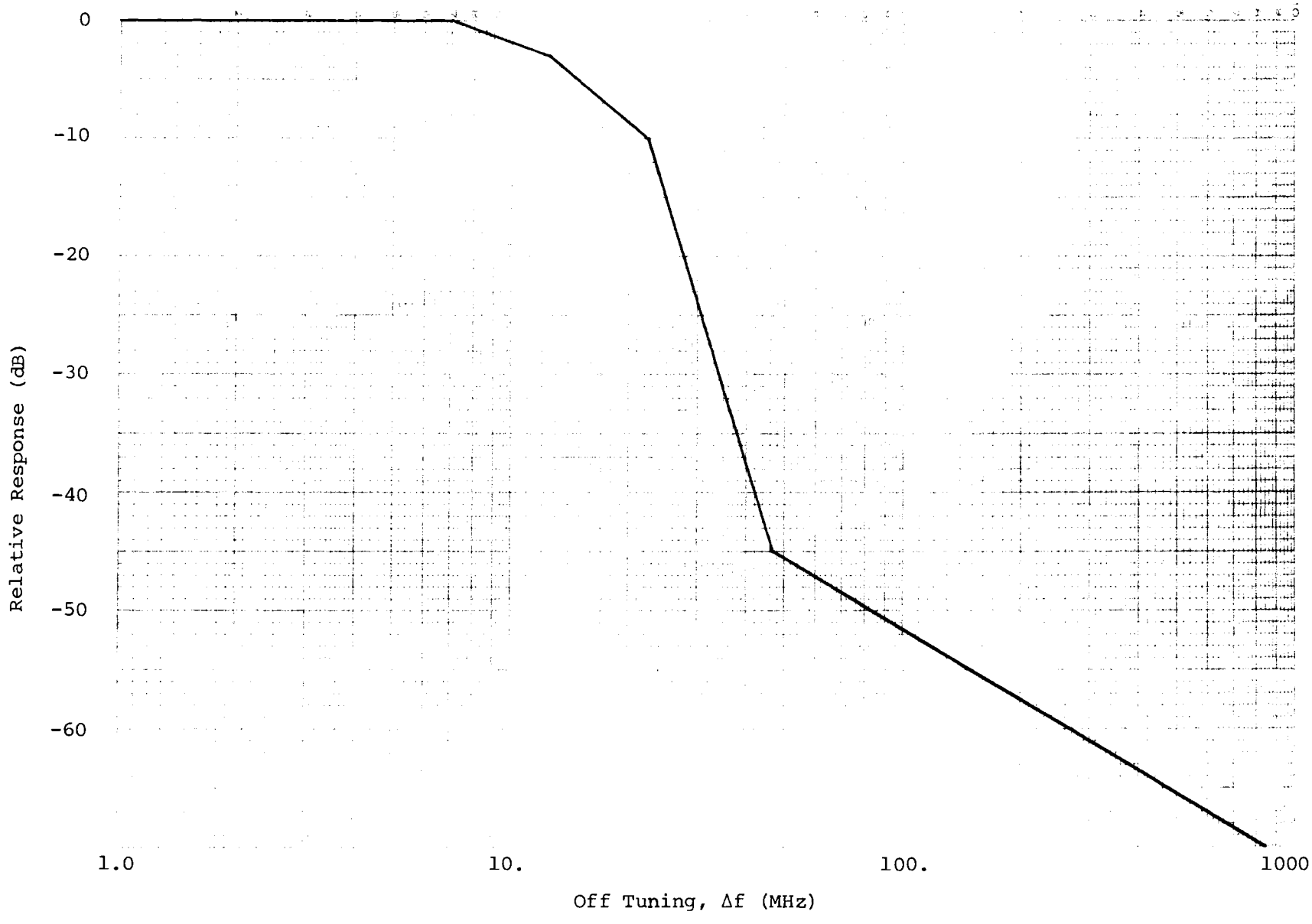

Figure 3. GPS receiver downconverter selectivity.

ANALYSIS

GPS Receiver Interference Criteria

The methods discussed below were used to calculate an equivalent on-tune average power level, from each on-board transmitter, for comparison with the GPS interference thresholds. These thresholds represent the jamming powers which will prevent acquisition and cause loss of lock. Receiver measurements performed at Lincoln Laboratory showed that a minimum carrier-to-noise spectral density ratio (C/N_o) for signal acquisition is 35 dB-Hz and that loss of lock will occur at 33 dB-Hz. The recommended GPS interference thresholds, including margins to account for manufacturing tolerances and aging are:[5]

	C/N_o	Maximum Jamming Level
Minimum for acquisition	37 dB-Hz	-109 dBm
Loss of Lock	34 dB-Hz	-106 dBm

The GPS specification (Reference 1) does not indicate any frequency dependence for burnout or saturation of the feedback limiting diode that precedes the preamplifier. The burnout and saturation limits (from Reference 1) used are:

Burnout	+37 dBm	CW power
	+55 dBm	Peak power
Saturation	+15 dBm	Peak power

Four types of potential interference were considered in the analysis: adjacent-signal interference, out-of-band transmitter interference, saturation, and burnout.

[5] MIT LL/Group 42 letter of 17 May 1982, subject: Review comments for draft report ECAC-CR-82-048.

Adjacent-signal Interference

In the analysis of adjacent-signal interference conducted for the four civil aircraft configurations, the effect of emissions from DME, ATCRBS, Mode S, and TCAS transmitters on the GPS receiver was considered. Calculations were also performed to determine the effect of CW leakage from these transmitters. The maximum allowable CW output powers for DME (-47 dBm), ATCRBS (-40 dBm), Mode S (-50 dBm), and TCAS (-60 dBm) were used for these calculations. CW emissions from these transmitters will not affect the GPS receiver operation.

For each potential interference case, the peak and average effective on-tune interference power levels referenced to the input of the GPS receiver were calculated. The parameters used in the calculation of effective on-tune interference power level were transmitter output power, transmitter and receiver antenna gains, transmitter duty cycle, frequency-dependent rejection, and path loss. Transmitter maximum power was used in this analysis. Antenna gains for the interference sources were obtained from the ECAC data base.

FDR depends on the detuning between a transmitter and a receiver, and is the rejection provided by a receiver to a transmitted signal as a result of both the limited bandwidth of the receiver with respect to the emission spectrum and the specified detuning. FDR was calculated using the bounds on the transmitter emission spectrum, the GPS receiver selectivity, and the minimum frequency separation. A detailed description of FDR is contained in APPENDIX F.

The effects of shielding by the aircraft fuselage, wings, and engine pods, where applicable, were taken into consideration in the path-loss calculations. Equation 1 was used to calculate the peak effective on-tune interference power at the input to the GPS receiver:

$$P_R = P_T + G_T + G_R - FDR - L_p \qquad (1)$$

where

P_R = peak effective on-tune interference power at the receiver, in dBm

P_T = peak transmitter output power, in dBm

G_T = transmitter antenna gain, in dBi

G_R = receiver antenna gain, in dBi

FDR = frequency-dependent rejection, in dB

L_p = path loss (calculated at the transmit frequency), in dB.

The average effective on-tune interference power at the input to the GPS receiver was calculated using Equation 2 and the results of Equation 1:

$$P_A = 10 \log \left(\frac{dc}{100}\right) + P_R \qquad (2)$$

where

P_A = average effective on-tune interference power at the receiver, in dBm

dc = the duty cycle expressed as a percentage

and P_R was defined previously.

The average interfering signal power was compared with the GPS interference thresholds in order to determine whether or not the potential for interference existed.

Out-of-band Transmitter Interference

Potential in-band interference from out-of-band transmitters was considered for each aircraft by examining the particular communication equipment on board. The potential of interference was evaluated by calculating the maximum power level that each transmitter could present to the GPS receiver and comparing it to the interference power level criteria.

SECTION 3

CONCLUSIONS AND RECOMMENDATION

GENERAL

The cosite EMC of the simultaneous operation of a prototype civil-use GPS receiver and other avionic systems was evaluated for the GPS receiver on board a Boeing 747, a Boeing 727, and two configurations of a Rockwell Aerocommander. The EMC aspects that were examined included burnout and saturation of the limiting diode, preamplifier, and downconverter, interference to C/A signal acquisition, and interference to C/A signal code and carrier tracking.

CONCLUSIONS

No potential instances were identified of burnout or saturation of the limiter, the preamplifier, or the downconverter due to signals from individual or multiple on-board transmitters.

No potential instances were identified in which the interfering signal from an individual on-board transmitter exceeded the interference thresholds for C/A signal acquisition or for C/A signal code and carrier tracking. However, in one case (i.e., the VHF #2 harmonic signal presented to the GPS #2 on the FAA Technical Center Aerocommander), the predicted interfering signal level is equal to the interference threshold for C/A signal acquisition (-109 dBm).

One potential instance was predicted in which the interfering signals from multiple on-board transmitters combined to produce an interfering signal level that exceeded the interference threshold for C/A signal acquisition. This case involved a harmonic signal from the VHF #2 transmitter and the noise skirts of the Mode S transmitter emission received simultaneously by the GPS #2 receiver on board the FAA Technical Center Aerocommander. The combined interfering signal level was -108 dBm; 1 dB above the interference threshold. Therefore, the simultaneous operation of the VHF #2 transceiver

TABLE A-1

HF TRANSCEIVER CHARACTERISTICS

	ARINC No. 533A[a]	Collins 618-T-2[b]
Frequency range (MHz)	2-30	2-30
No. of channels		28,000
Peak envelope power (PEP) output (W)		
Single-sideband	400	400
Amplitude modulation		125
Harmonic attenuation (dB)		
Minimum	40	d
At L1 frequency	d	120[c]
Spurious attenuation (dB)		
Minimum	60	d
At L1 frequency	d	120[c]
Antenna fundamental gain (dBi)	d	3.0

[a]Airborne HF SSB/AM System, ARINC Characteristic No. 533A, Aeronautical Radio, INC, Annapolis, MD, March 1966.

[b]618T-1, 618T-1B, 618T-2, 618T-2B, 618T-3, and 618T-3B Airborne SSB Transceivers, 520-5970004-A01114, Collins Radio Company, Cedar Rapids, Iowa, October, 1968.

[c]Assumed values.

[d]Not available.

TABLE A-2

VHF TRANSCEIVER CHARACTERISTICS

	ARINC No. 546[a]	NARCO MK-24[i]	KING KTR-900[c]	BENDIX RTA-42A[d]	KING KTR-9100[e]	BENDIX RTA-41A[f]	COLLINS VHF-20[g]
Frequency range (MHz)	118-135.975	118-135.950	118-135.975	116-149.975	118-135.975	118-135.975	117-135.975
No. of channels	720	180	760	1360	720	720	720
Modulation	AM	AM	AM	AM	AM/FM	AM	AM
Power Output (W)	25-50	6	25	25	25	25	20
Harmonic attenuation (dB)							
Minimum	59	h	60	60	60	h	60
At L1 frequency	h	120[b]	120[b]	120[b]	120[b]	120[b]	120[b]
Spurious attenuation (dB)							
Minimum	79	h	90	100	110	h	90
At L1 frequency	h	120[b]	120[b]	120[b]	120[b]	120[b]	120[b]
Antenna							
Fundamental gain (dBi)	3	2.1	2.1	2.1	2.1	2.1	2.1
Polarization	Vertical	Vertical	Vertical	Vertical	Vertical	Vertical	Vertical

[a]Airborne VHF Communications Transceiver System, ARINC Characteristic No. 546, Aeronautical Radio, Inc., Annapolis, MD, October 1961.

[b]Assumed values.

[c]KTR-900 VHF Communications Transceiver, 006-5006-00, King Radio Corporation, Olathe, Kansas, April 1968.

[d]RTA-42A VHF Transceiver, I.B. 1142A-1 (23-23-2), Bendix Avionics Division, Ft. Lauderdale, FL, December 1973.

[e]KTR 9100 VHF Communications Transceiver Overhaul Manual, 006-5026-02, King Radio Corporation, Olathe, Kansas, February 1970.

[f]RTA-41 VHF Communications Systems, I.B. 1141A, Bendix Radio Division, Baltimore, MD, April 1968.

[g]VHF-20 Communications System, VSMF-0651, Collins General Aviation Division, Rockwell International, Cedar Rapids, Iowa, October 1978.

[h]Not available.

[i]Nominal characteristics obtained from the ECAC data base.

TABLE A-3

UHF TRANSCEIVER CHARACTERISTICS

	Collins AN/ARC-159[b]
Frequency range (MHz)	225. - 399.975
Modulation	AM
Power output (W)	10
Harmonic attenuation (dB)	
Minimum	60
At L1 frequency	100[a]
Spurious attenuation (dB)	
Minimum	60
At L1 frequency	100[a]
Antenna	
Fundamental gain (dBi)	3
Polarization	Vertical

[a]Assumed values.

[b]Radio Set AN/ARC-159, Technical Manual NAVAIR 16-30 ARC159-1, Collins Radio Group/Rockwell International, June 1976.

TABLE A-3

UHF TRANSCEIVER CHARACTERISTICS

	Collins AN/ARC-159[b]
Frequency range (MHz)	225. - 399.975
Modulation	AM
Power output (W)	10
Harmonic attenuation (dB)	
Minimum	60
At L1 frequency	100[a]
Spurious attenuation (dB)	
Minimum	60
At L1 frequency	100[a]
Antenna	
Fundamental gain (dBi)	3
Polarization	Vertical

[a]Assumed values.

[b]Radio Set AN/ARC-159, Technical Manual NAVAIR 16-30 ARC159-1, Collins Radio Group/Rockwell International, June 1976.

DME INTERROGATOR

Distance-measuring equipment provides the pilot with the slant-range distance from the aircraft to a selected DME ground facility. The airborne unit converts elapsed time to distance by measuring the length of time between the transmission of an interrogation to the selected ground station and the reception of the reply signal. The interrogator technical characteristics are given in TABLE A-4.

ATCRBS TRANSPONDER

The airborne air-traffic control transponder receives coded interrogations from a ground interrogator and responds by transmitting coded replies. The coded replies contain pilot-selectable identification codes and automatic-altitude codes depending on the mode of interrogation received. The transponder characteristics are given in TABLE A-5.

Mode S TRANSPONDER

The Mode S, which is being developed, is designed to be an improved secondary radar system with an integrated two-way data link. Mode S will differ from ATCRBS in the manner of selecting which aircraft will respond to an interrogation. In ATCRBS, the selection is spatial; in Mode S, each aircraft will be assigned a unique address code. Thus, an interrogator will be able to limit responses to its interrogations to those targets for which it will have surveillance responsibility, and to time the interrogations to ensure that the responses do not overlap. The Mode S transponder technical characteristics are given in TABLE A-6.

TCAS INTERROGATOR

The TCAS, which is being developed, is designed to be an active airborne collision avoidance system that will transmit interrogations to elicit replies from cooperating transponders. TCAS will utilize two signal formats, one that

TABLE A-4

DME INTERROGATOR CHARACTERISTICS

	ARINC No. 568[c]	NARCO DME-195[d]	KING KN-63[e]	KING KDM-7000[f]	COLLINS 860E-3[g]	KING KN-65[h]
Frequency Range Transmit (MHz)	1025-1150	1025-1150	1025-1150	1025-1150	1025-1150	1025-1150
Channel Spacing (MHz)	1	1	1	1	1	1
Peak output power (dBW)	30±3	20	30	30	30	30
Pulse width (μs)	3.5 (±.5)	3.5	3.5	3.5	3.5	3.5
Interrogation rate, maximum (pulse pairs per second)	150	150	150	144	150	150
Duty Cycle[a], maximum (%)	0.105	0.105	0.105	0.1008	0.105	0.105
Emission Bandwidth[a] (MHz)						
@ - 3 dB level	i	0.15	0.15	0.15	0.15	0.15
@ -20 dB level	i	0.52	0.52	0.52	0.52	0.52
@ -60 dB level	i	5.2	5.2	5.2	5.2	5.2
Spurious attenuation (dB)						
Minimum	i					
At L1 frequency	i	b	b	b	b	b
Antenna						
Fundamental Gain (dBi)	3	2.1	2.0	2.1	2.1	2.1
Polarization	Vertical	Vertical	Vertical	Vertical	Vertical	Vertical

[a]Calculated

[b]Measured data on a military unit (Spectrum Signature of Radio Set AN/ARN-65, Technical Report SEG-TR-67-12, March 1967) comparable to DME were reviewed. All spurious emissions more than 130 MHz above the fundamental were harmonics. Therefore, no significant spurious emissions are expected near the L1 frequency.

[c]Mark-3 Airborne Distance Measuring Equipment, ARINC Characteristic No. 568, Aeronautical Radio, Inc., Annapolis, MD, February 9, 1968.

[d]Distance Measuring Equipment UDI-2A Interrogator, Maintenance Manual MM-03313-0600, National Aeronautical Corporation, Fort Washington, Pennsylvania, January 1976.

[e]KN-63 Digital DME System, MM-006-8313-01, King Radio Corporation, Olathe, Kansas, January 1980.

[f]KDM 7000 Digital DME System, VSMF-1469, King Radio Corporation, Olathe, Kansas, January 1980.

[g]860E-3 DME, 523-0762873-411113, Collins Radio Company, Cedar Rapids, Iowa, November 1975.

[h]KN-65/65A Distance Measuring Equipment, MM-006-5045-06, King Radio Corporation, Olathe, Kansas, September 1971.

[i]Not available.

TABLE A-6

MODE S TRANSPONDER CHARACTERISTICS

	U.S. National Standard[d]	Bendix TRU-2[e]
Frequency (transmit) (MHz)	1090	1090
Peak power output (dBW)	27	27
Pulse width (μs)	0.5/1.0	0.5/1.0
Duty cycle, long term (%)	1.0	1.0[a]
Emission bandwidth[g] (MHz)		
@ - 3 dB level	2.6	1.7[b]
@ -20 dB level	14.	12.8[b]
@ -40 dB level	46.	38.[b]
@ -60 dB level	156.	120.[b]
Spurious attenuation (dB)		
Minimum	60	60
At L1 frequency	f	105[c]
Antenna		
Fundamental gain (dBi)	3	2.1
Polarization	Vertical	Vertical

[a]Duty cycle supplied by FAA.

[b]Calculated.

[c]Assumed value.

[d]U.S. National Aviation Standard For The Discrete Address Beacon System, FAA Order 6365.1, U.S. Department of Transportation, Federal Aviation Administration, Systems Research & Development Service, Washington, D.C. December 9, 1980.

[e]TRU-2 DABS/ATC Transponder System, I.B. 1171A, Bendix Avionics Division, Ft. Lauderdale, FL, December 1980.

[f]Not available.

[g]The DABS [Mode S] National Standard values do not include a ±3 MHz reply frequency tolerance.

is compatible with the ATCRBS signal format and one that is compatible with the Mode S signal format. TCAS is intended to provide the collision avoidance function in a mixed environment of Mode S and ATCRBS transponder-equipped aircraft. The interrogator technical characteristics are presented in TABLE A-7.

TABLE A-7

TCAS INTERROGATOR CHARACTERISTICS

	FAA Engineering Requirement[b]
Frequency (transmit) (MHz)	1030
Peak power output (dBW)	30
Pulse width (μs)	0.8/1.6 (ATCRBS) 0.8/16.25/30.25 (Mode S)
Duty cycle, long term (%)	0.1[a]
Emission bandwidth (MHz)	
@ - 3 dB level	6
@ -20 dB level	21
@ -40 dB level	67
@ -60 dB level	210
Spurious attenuation (dB)	
Minimum	120
At L1 frequency	>120
Antenna	
Fundamental gain (dBi)	2.1[c]
Polarization	Vertical

[a]Value provided by FAA.

[b]Engineering Requirement for the Active Beacon Collision Avoidance System, FAA-ER-250-2, Department of Transportation, Federal Aviation Administration, Systems Research & Development Service, Washington, DC, July 18, 1979.

[c]Value assumed. FAA-ER-250-2, Section 3.2.3 states that the antenna pattern shall be essentially omnidirectional or have a slight gain in the forward direction

Figure B-3 is a sketch of the Aerocommander airframe showing front and side views. Since the Aerocommander airframe is noncylindrical, AVPAK, which models an airframe as a cylinder of finite length, was not used in determining the path loss between antennas. Instead, the procedure described in Reference 4 was used in determining the airframe path losses.

For each case, the peak and average on-tune, interfering-signal power levels that the transmitter may present to the GPS receiver were calculated. TABLE B-1 contains a summary of the calculations. None of the calculated levels exceeded the specified interference criteria, hence, the DME and ATCRBS systems aboard the MIT LL Aerocommander are not expected to interfere with the GPS operation.

OUT-OF-BAND TRANSMITTER ANALYSIS

Signal sources investigated in this analysis included two on-board VHF communication transmitters. The potential for interference was evaluated by comparing the possible harmonic/spurious power level each transmitter could present to the GPS receiver with an interference threshold. Received power levels were calculated at the L1 GPS frequency. A summary of the results is presented in TABLE B-2. The levels calculated for VHF #1 and VHF #2 were 17 dB and 21 dB, respectively, below the interference criterion. As a result, the VHF communication transmitters aboard the MIT LL Aerocommander are not expected to interfere with the GPS operation.

BURNOUT LIMITER ANALYSIS

The degradation criteria for the feedback limiting diode preceding the preamplifier are as follows. The diode can tolerate CW power of 5 watts and peak power of 300 watts. The maximum leakage power (saturation threshold) is 32 mW. A summary of the burnout/saturation calculations is presented in

TABLE B-3
SUMMARY OF THE CALCULATIONS FOR THE MIT LL AEROCOMMANDER
SATURATION/BURNOUT ANALYSIS[a]

Transmitter ID	GPS ID	Tx Peak Output Power (dBm)	Tx Antenna Gain (dBi)	GPS Antenna Gain (dBi)	Path Loss (dB)	Antenna Mismatch (dB)	Peak Received Power (dBm)[b]	Tx Duty Duty Cycle (%)	Average Received Power (dBm)[c]
VHF #1	GPS	38	0	-7	15	31	-15	100	-15
VHF #2	GPS	44	0	-7	25	31	-19	100	-19
DME #1	GPS	50	0	-7	82	--	-39	0.105	-69
DME #2	GPS	60	0	-7	98	--	-45	0.105	-75
ATCRBS	GPS	57	0	-7	82	--	-32	1.35	-51

[a]Transmitter parameters are given in APPENDIX A.

[b]The peak received power may be compared with the saturation threshold (+15 dBm) and, for pulsed signals, with the peak burnout threshold (+55 dBm) of the feedback limiting diode.

[c]The average received power may be compared with the average burnout threshold (+37 dBm) of the feedback limiting diode.

TABLE C-1
SUMMARY OF THE CALCULATIONS FOR THE FAA TECHNICAL CENTER
BOEING 727 ADJACENT-SIGNAL ANALYSIS[a]

Transmitter ID	GPS ID	Tx Peak Output Power (dBm)	Tx Antenna Gain (dBi)	GPS Antenna Gain (dBi)	FDR (dB)	Path Loss (dB)	Peak Received Power (dBm)	Transmitter Duty Cycle (%)	Average Received Power (dBm)[b]
TACAN/DME #1	GPS #1	60	0	0	129	97	-166	0.10	-196
TACAN/DME #1	GPS #2	60	0	-7	129	90	-166	0.10	-196
TACAN/DME #1	GPS #3	60	0	-7	129	90	-166	0.10	-196
TACAN/DME #2	GPS #1	60	0	0	129	97	-166	0.10	-196
TACAN/DME #2	GPS #2	60	0	-7	129	90	-166	0.10	-196
TACAN/DME #2	GPS #3	60	0	-7	129	90	-166	0.10	-196
ATCRBS	GPS #1	57	0	0	96	98	-137	1.35[c]	-156
ATCRBS	GPS #2	57	0	-7	96	84	-130	1.35[c]	-149
ATCRBS	GPS #3	57	0	-7	96	84	-130	1.35[c]	-149
Mode S (T)	GPS #1	57	0	0	96	57	- 96	1.0[c]	-116
Mode S (T)	GPS #2	57	0	-7	96	66	-112	1.0[c]	-132
Mode S (T)	GPS #3	57	0	-7	96	67	-113	1.0[c]	-133
Mode S (B)	GPS #1	57	0	0	96	98	-137	1.0[c]	-157
Mode S (B)	GPS #2	57	0	-7	96	84	-130	1.0[c]	-150
Mode S (B)	GPS #3	57	0	-7	96	84	-130	1.0[c]	-150
TCAS LL (T)	GPS #1	57	0	0	83	56	-82	0.1[c]	-112
TCAS LL (T)	GPS #2	57	0	-7	83	65	-98	0.1[c]	-128
TCAS LL (T)	GPS #3	57	0	-7	83	65	-98	0.1[c]	-128
TCAS LL (B)	GPS #1	57	0	0	83	98	-124	0.1[c]	-154
TCAS LL (B)	GPS #2	57	0	-7	83	84	-110	0.1[c]	-140
TCAS LL (B)	GPS #3	57	0	-7	83	84	-110	0.1[c]	-140
TCAS DV (T)	GPS #1	57	0	0	83	56	-82	0.1[c]	-112
TCAS DV (T)	GPS #2	57	0	-7	83	65	-98	0.1[c]	-128
TCAS DV (T)	GPS #3	57	0	-7	83	65	-98	0.1[c]	-128
TCAS DV (B)	GPS #1	57	0	0	83	98	-124	0.1[c]	-154
TCAS DV (B)	GPS #2	57	0	-7	83	84	-110	0.1[c]	-140
TCAS DV (B)	GPS #3	57	0	-7	83	84	-110	0.1[c]	-140

[a]Transmitter parameters are given in APPENDIX A.

[b]The average received power level may be directly compared with the GPS interference thresholds for C/A signal acquisition (-109 dBm) and C/A signal code and carrier tracking (-106 dBm).

[c]Duty cycle supplied by FAA.

TABLE C-2
SUMMARY OF THE CALCULATIONS FOR THE FAA TECHNICAL CENTER
BOEING 727 OUT-OF-BAND ANALYSIS[a]

Transmitter ID	GPS ID	Tx Output Power (dBm)	Tx Antenna Gain (dBi)	GPS Antenna Gain (dBi)	Harmonic Attenuation (dB)	Path Loss (dB)	Received Power (dBm)[b]
UHF	GPS #1	40	0	0	100	84	-144
UHF	GPS #2	40	0	-7	100	77	-144
UHF	GPS #3	40	0	-7	100	77	-144
VHF #1	GPS #1	44	0	0	120	56	-132
VHF #1	GPS #2	44	0	-7	120	61	-144
VHF #1	GPS #3	44	0	-7	120	62	-145
VHF #2	GPS #1	44	0	0	120	77	-153
VHF #2	GPS #2	44	0	-7	120	72	-155
VHF #2	GPS #3	44	0	-7	120	72	-155
VHF #3	GPS #1	44	0	0	120	77	-153
VHF #3	GPS #2	44	0	-7	120	72	-155
VHF #3	GPS #3	44	0	-7	120	72	-155
HF	GPS #1	56	0	0	120	62	-126
HF	GPS #2	56	0	-7	120	58	-129
HF	GPS #3	56	0	-7	120	58	-129

[a]Transmitter parameters are given in APPENDIX A.

[b]The average received power level may be directly compared with the GPS interference thresholds for C/A signal acquisition (-109 dBm) and C/A signal code and carrier tracking (-106 dBm).

TABLE D-3
SUMMARY OF THE CALCULATIONS FOR THE BOEING 747
SATURATION/BURNOUT ANALYSIS[a]

Transmitter ID	GPS ID	Tx Peak Output Power (dBm)	Tx Antenna Gain (dBi)	GPS Antenna Gain (dBi)	Path Loss (dB)	Antenna Mismatch (dB)	Peak Received Power (dBm)[b]	Transmitter Duty Cycle (%)	Average Received Power (dBm)[c]
VHF #1	GPS #1	44	0	0	31	31	-18	100.	-18
VHF #1	GPS #2	44	0	0	42	31	-29	100.	-29
VHF #1	GPS #3	44	0	0	45	31	-32	100.	-32
VHF #2	GPS #1	44	0	0	63	31	-50	100.	-50
VHF #2	GPS #2	44	0	0	63	31	-50	100.	-50
VHF #2	GPS #3	44	0	0	62	31	-49	100.	-49
VHF #3	GPS #1	45	0	0	34	31	-20	100.	-20
VHF #3	GPS #2	45	0	0	31	31	-17	100.	-17
VHF #3	GPS #3	45	0	0	39	31	-25	100.	-25
HF #1	GPS #1	56	0	0	6[d]	60	-10	100.	-10
HF #1	GPS #2	56	0	0	6[d]	60	-10	100.	-10
HF #1	GPS #3	56	0	0	6[d]	60	-10	100.	-10
HF #2	GPS #1	56	0	0	6[d]	60	-10	100.	-10
HF #2	GPS #2	56	0	0	6[d]	60	-10	100.	-10
HF #2	GPS #3	56	0	0	6[d]	60	-10	100.	-10
ATCRBS #1	GPS #1	57	0	0	116	0	-59	1.35	-78
ATCRBS #1	GPS #2	57	0	0	109	0	-52	1.35	-71
ATCRBS #1	GPS #3	57	0	0	106	0	-49	1.35	-68
ATCRBS #2	GPS #1	60	0	0	117	0	-57	1.35	-76
ATCRBS #2	GPS #2	60	0	0	109	0	-49	1.35	-68
ATCRBS #2	GPS #3	60	0	0	107	0	-47	1.35	-66
DME #1	GPS #1	60	0	0	119	0	-59	0.10	-89
DME #1	GPS #2	60	0	0	110	0	-50	0.10	-80
DME #1	GPS #3	60	0	0	107	0	-47	0.10	-77
DME #2	GPS #1	60	0	0	119	0	-59	0.10	-89
DME #2	GPS #2	60	0	0	110	0	-50	0.10	-80
DME #2	GPS #3	60	0	0	107	0	-47	0.10	-77

[a]Transmitter parameters are given in APPENDIX A.

[b]The peak received power may be compared with the saturation threshold (+15 dBm) and, for pulsed signals, with the peak burnout threshold (+55 dBm) of the feedback limiting diode.

[c]The average received power may be compared with the average burnout threshold (+37 dBm) of the feedback limiting diode.

[d]Assumed minimum loss of 6-dB.

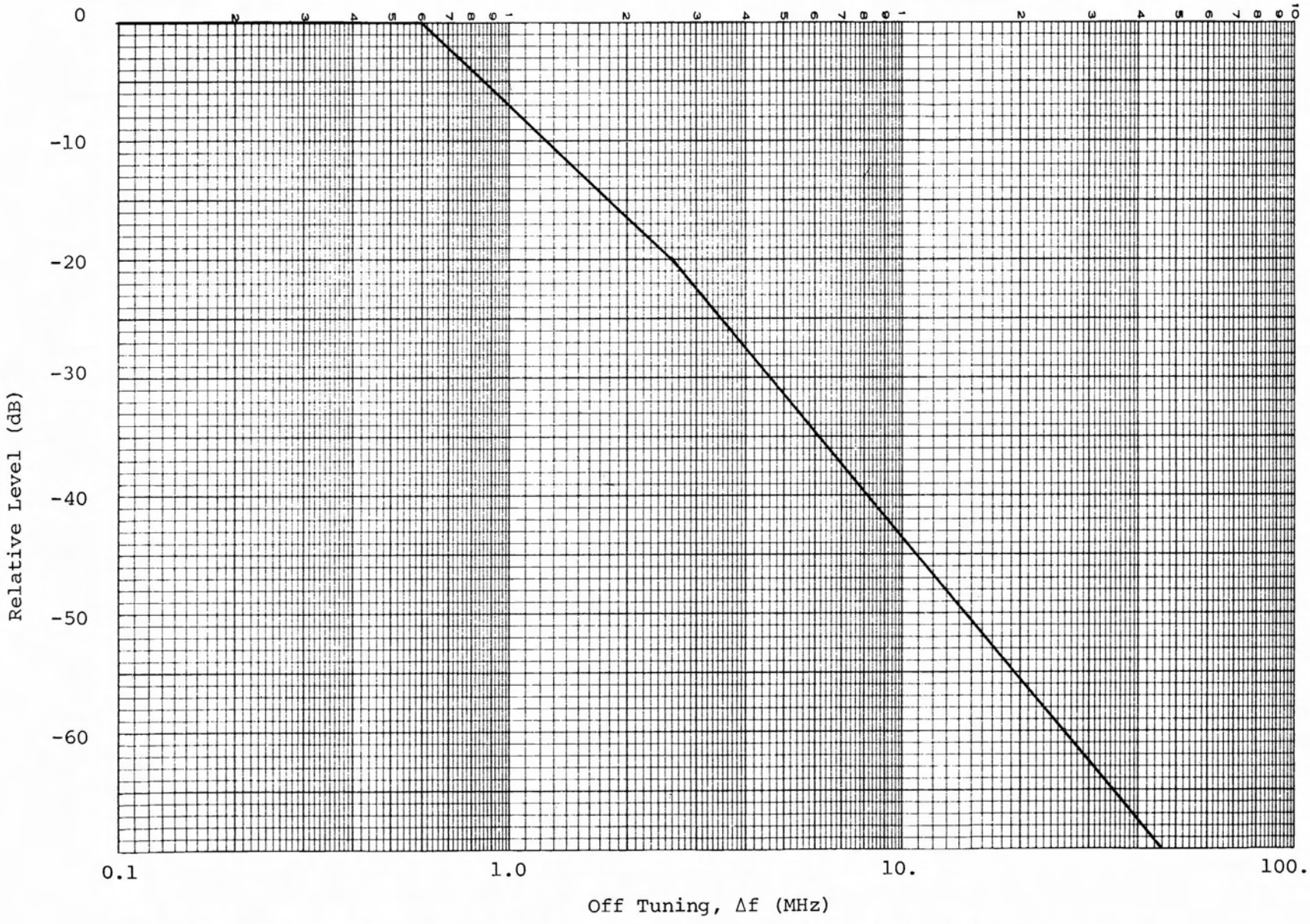

Figure F-1. Normalized power spectral density boundary of the DME interrogator.

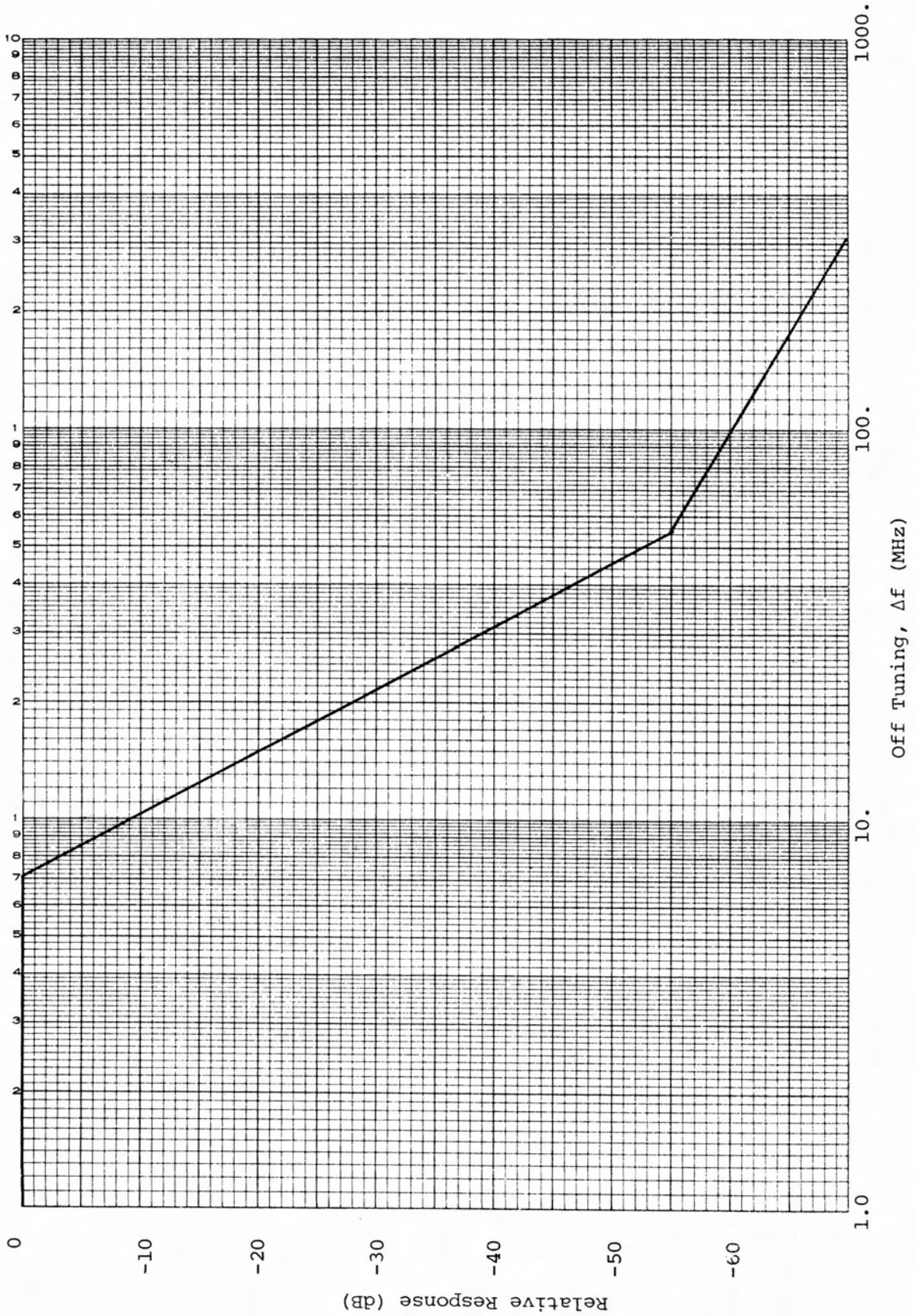

Figure F-2. GPS preamplifier selectivity.

DOT/FAA
RD-82/63

EMC analysis of a prototype civil-use GPS receiver on four aircraft configurations / 00026853