RD
91/24

DOT/FAA/RD-91/24

Research and
Development Service
Washington, D.C. 20591

# Subsurface Drainage of Pavement Structures:
## Current Corps of Engineers and Industry Practice

Wendy L. Allen

U.S. Army Cold Regions Research and
Engineering Laboratory
Hanover, New Hampshire 03755-1290

1992

December 1991

This document is available to the public
through the National Technical Information
Service, Springfield, Virginia 22161

U.S. Department of Transportation
**Federal Aviation Administration**

*NOTICE*

*This document is disseminated under the sponsorship of the Department of Transportation in the interest of information exchange. The United States Government assumes no liability for its contents or use thereof.*

**Technical Report Documentation Page**

| 1. Report No. | 2. Government Accession No. | 3. Recipient's Catalog No. |
|---|---|---|
| DOT/FAA/RD-91/24 | | |

| 4. Title and Subtitle | 5. Report Date |
|---|---|
| Subsurface Drainage of Pavement Structures: Current Corps of Engineers and Industry Practice | December 1991 |
| | 6. Performing Organization Code |
| 7. Author(s) | 8. Performing Organization Report No. |
| Wendy L. Allen | CRREL Report 91-22 |
| 9. Performing Organization Name and Address | 10. Work Unit No. (TRAIS) |
| U.S. Army Cold Regions Research and Engineering Laboratory<br>72 Lyme Road<br>Hanover, New Hampshire 03755-1290 | 11. Contract or Grant No.<br>DTFA01-89-Z-02050 |
| 12. Sponsoring Agency Name and Address | 13. Type of Report and Period Covered |
| U.S. Department of Transportation<br>Federal Aviation Administration<br>Research and Development Service<br>Washington, D.C. 20591<br><br>U.S. Army<br>Office of the Chief of Engineers<br>Washington, D.C. 20314-1000 | Final |
| | 14. Sponsoring Agency Code |
| | ARD-200 |

15. Supplementary Notes

16. Abstract

Drainage of pavement structures is recognized as a key factor in improving the performance and extending the maintenance-free life of pavement systems. The use of pavement drainage structures to remove water introduced to the pavement system by surface infiltration, melting of ice lenses formed during freeze–thaw cycles and groundwater sources has become more prevalent during the last decade. The components that make up a well-drained pavement section are commonly known: adequate surface drainage, permeable base courses, filters and a system of collector pipes. However, the details of the design of these components change with the agency constructing the pavement and the use of the pavement. The criteria and specifications of Federal and State governments, and private industry, along with those currently used by the Corps of Engineers,will be presented in this document. A comparison of the practices used in designing pavement drainage systems, among agencies, is presented to show where some design practices may benefit from technologies already accepted by others.

| 17. Key Words | | 18. Distribution Statement |
|---|---|---|
| Airfields<br>Base course<br>Cold regions | Drainage<br>Drains<br>Highways<br>Pavements | This document is available to the public through the National Technical Information Service, Springfield, Virginia 22161. |

| 19. Security Classif. (of this report) | 20. Security Classif. (of this page) | 21. No. of Pages | 22. Price |
|---|---|---|---|
| Unclassified | Unclassified | 39 | |

**Form DOT F 1700.7** (8-72) Reproduction of completed page authorized

## PREFACE

This report was prepared by Wendy L. Allen, Research Civil Engineer, Civil and Geotechnical Engineering Research Branch, Experimental Engineering Division, U.S. Army Cold Regions Research and Engineering Laboratory, Hanover, New Hampshire. Funding for this study was provided by the Federal Aviation Administration and the Office of the Chief of Engineers through DA Project 4A76278AT42, *Cold Regions Engineering Technology*; Task BS, *Base Support*; Work Unit 003, *Asphalt Pavements in Cold Regions*.

This report was reviewed technically by Dr. Walter Barker (USAWES) and Dr. Stephen Ketcham (USACRREL).

The contents of this report are not to be used for advertising or promotional purposes. Citation of brand names does not constitute an official endorsement or approval of the use of such commercial products.

## CONTENTS


| | Page |
|---|---|
| Abstract | i |
| Preface | ii |
| Conversion table | v |
| Introduction | 1 |
| Purpose | 2 |
| Scope | 2 |
| Estimation of precipitation, infiltration and the flow capacity of drained pavements | 2 |
| Precipitation | 3 |
| Infiltration | 3 |
| Permeability of soils and the quantity of flow | 6 |
| Design of pavement drainage | 12 |
| Drainage systems | 12 |
| Preliminary site investigation | 15 |
| Surface drainage design | 15 |
| Base and subbase course design | 16 |
| Filter design | 18 |
| Collector pipe | 21 |
| Manholes, observation basins, outlets and risers | 26 |
| Retrofit edge drains | 27 |
| Construction | 27 |
| Cold regions considerations | 28 |
| Conclusions | 29 |
| Literature cited | 30 |
| Bibliography | 31 |


## ILLUSTRATIONS


| Figure | |
|---|---|
| 1. Design storm index | 3 |
| 2. Frost-susceptibility of soils | 5 |
| 3. Estimate of inflow from ice lens melt water | 6 |
| 4. Typical gradations and permeabilities of open-graded and filter materials | 6 |
| 5. Nomograph for estimating the coefficient of permeability of granular drainage and filter materials | 7 |
| 6. Variation of the viscosity of water with temperature | 7 |
| 7. Permeability chart | 9 |
| 8. Pavement dimensions for base course drainage design | 10 |
| 9. Groundwater conditions after installation of subdrains | 11 |
| 10. Thickness of groundwater layer in relation to shape factor | 12 |
| 11. Typical details of base and subbase drains | 13 |
| 12. Typical details of subgrade drains | 14 |
| 13. Typical intercepting drain | 15 |
| 14. Geotextile placement in subsurface drains | 21 |
| 15. Nomograph for airfield drainage | 24 |
| 16. Geocomposite fin drain | 25 |
| 17. FHWA shallow drains | 25 |
| 18. FHWA deep drains | 26 |

Figure Page
19. Typical base course and drain configurations ..... 26
20. Typical drain trench details ..... 27
21. Typical riser ..... 27
22. Subdrains for cold regions ..... 29

## TABLES

Table
1. Permeability based on the no. 100 sieve ..... 8
2. Permeability of remolded samples ..... 8
3. AASHTO quality of drainage criteria ..... 10
4. Subgrade permeability with relation to groundwater depth ..... 15
5. ASTM aggregate gradations ..... 17
6. New Jersey gradation ..... 17
7. Pennsylvania open-graded aggregate ..... 17
8. Free-draining, open-graded and rapid-draining aggregates ..... 17
9. Additional properties of open-graded and rapid-draining mixes ..... 18
10. Geotextile criteria ..... 20
11. Geotextile strength criteria ..... 21
12. AASHTO geotextile criteria ..... 22

## CONVERSION FACTORS: U.S.CUSTOMARY TO METRIC (SI) UNITS OF MEASUREMENT

These conversion factors include all the significant digits given in the conversion tables in the ASTM *Metric Practice Guide* (E 380), which has been approved for use by the Department of Defense. Converted values should be rounded to have the same precision as the original (see E 380).

| *Multiply* | *By* | *To obtain* |
|---|---|---|
| Btu/(foot hour °F) | 1.730735 | watt/(meter kelvin) |
| inch | 25.4 | millimeter |
| foot | 0.3048 | meter |
| $foot^3$/minute | 0.0004719474 | $meter^3$/second |
| degrees Fahrenheit | $t_C = (t_F - 32)/1.8$ | degrees Celsius |

# Subsurface Drainage of Pavement Structures
## Current Corps of Engineers and Industry Practice

WENDY L. ALLEN

## INTRODUCTION

Drainage of pavement structures is recognized as a key factor in improving pavement performance and extending the maintenance-free life of pavement systems. A conservative estimate of the increase in life of drained rigid and flexible pavements, as compared to their undrained counterparts, is 50 and 33% respectively (Forsyth et al. 1987). Incorporation of drainage into the pavement structure can also affect the necessary design criteria. The American Association of State Highway and Transportation Officials' (AASHTO 1986a) design procedure allows for modification of the design equations to take advantage of the benefits of drainable pavement materials to reduce the structural section of the pavement.

Poorly drained pavements exhibit several different types of distress. In flexible pavements, the reduced strength of saturated unbound granular base and subbase materials weakens the pavement structure, causing tensile stresses at the bottom of the asphalt layer, which may lead to cracking of the surface course. The weakened base and subbase layers may also rut. Additionally, water trapped in the asphalt concrete may cause stripping of asphaltic cement from the aggregates. In rigid pavements, water may cause erosion and ejection of subgrade or subbase materials through pumping action of the slabs, leading to the formation of voids beneath the slabs, and therefore a reduction in foundation support. The distresses that may result from or be accelerated by reduced foundation support in rigid concrete are faulting, corner breaking, transverse and diagonal cracking and edge punchout.

Several agencies have produced guidance on drainage of pavement structures or are currently studying the question. The U.S. Army Corps of Engineers (U.S. Army 1988) is producing guidance on permeable base materials and continues to update its criteria to include better drainage practices. AASHTO has included drainage of pavements in the *Guide for Design of Pavement Structures* (AASHTO 1986a,b). The FHWA has produced *Highway Subdrainage Design* (Moulton 1980), a comprehensive document on all aspects of pavement drainage. The FHWA is also currently funding a project on rehabilitation of Portland cement concrete pavements using edge drains (Baumgardner and Mathis 1989). The Transportation Research Board has published a Synthesis of Highway Practice Report on pavement subsurface drainage systems (Ridgeway 1982). Many states have been using drainage systems for the last decade or more, including California, New Jersey and Oregon, as well as the Canadian province of Ontario.

Pavement drainage systems incorporate features that both prevent water from infiltrating into the pavement and remove water that has infiltrated. Water is removed in two basic ways, a surface or storm drain and a subsurface drain. Surface drainage removes much of the surface runoff before it can infiltrate through the pavement or ground surface. Subsurface drainage should remove water that has infiltrated into the pavement structure through the surface course, the surface of the shoulders, the sides of the pavement structure and the subgrade.

In general, drainage design requires that the engineer estimate the design rainfall, surface infiltration and the permeability of the base course, specify the filter and trench backfill material, and determine the geometry of the drain system, the sizing of the pipe, the spacing of the outlets and rodent control measures. Reluctance to conform with practices that improve the drainage of a pavement still exists among designers, engineers and construction personnel. Their concerns include providing sufficient pavement strength, the high cost of clean open-graded aggregates and changes required in construction practice to place open-graded aggregates. These concerns contribute to an inertia keeping transportation agencies and contractors from implementing changes that could save future maintenance expenses.

## PURPOSE

The purpose of this report is to summarize drainage criteria for pavements found in Corps of Engineers documents. A similar summary of the practices mandated by private, state and federal agencies such as the American Association of State Highway and Transportation Officials (AASHTO) and the Federal Highway Administration (FHWA) will also be presented. These two sets of information will describe the current state of the practice for drainage of subsurface structures. A comparison of the two will allow for discussion of present deficiencies in the Corps criteria, as will additional discussion based on current research at CRREL that has not yet been incorporated into Corps criteria.

## SCOPE

For years advocates of well-drained pavements have been publishing material detailing the issues of pavement drainage. Discussions range from basic introduction of the hydrologic cycle, and definition of hydrological terms and quantities, to procedures for estimating the time required to achieve a specific degree of drainage, and design procedures to achieve this. The scope of this report is the design of pavement drainage systems, with an emphasis on subsurface drainage. The topics discussed include 1) estimation of precipitation, 2) estimation of surface infiltration, 3) flow capacity of base and subbase drainage layers, 4) aggregate for drainable base and subbase courses, 5) filters, 6) pipes, 7) construction and 8) cold regions considerations. Surface drainage is included as an integral part of a well-drained pavement. Details on the design of catch basins and other fixtures of surface drains are omitted.

The literature reviewed for this report includes that produced by the Corps of Engineers, the FHWA, AASHTO and several states and universities. The bulk of this material originates in the United States, with a few articles from Canada included. The information in these documents relevant to the design of a drained pavement structure will be presented in this report. Additional information, such as details of the Corps of Engineers construction specifications, are not presented in this report. The Corps of Engineers has several series of documents that deal with drainage of pavement structures. They are Technical Manuals (designated TM), Corps of Engineers Guide Specifications (CEGS), Corps of Engineers Guide Specification (for) Mobilization Construction (MOGS) and Engineer Technical Letters (ETL). Technical Manuals give the most complete and general discussion of their subject, and typically have broader topics. Guide Specifications pertain to more specific topics. Engineer Technical Letters are interim documents on criteria that have not yet been permanently entered into the Technical Manuals.

The documents directly related to drainage of pavement structures are TM 5-818-2, *Pavement Design for Seasonal Frost Conditions* (U.S. Army 1985), TM 5-820-1, *Surface Drainage Facilities for Airfields and Heliports* (U.S. Army 1977), TM 5-820-2, *Subsurface Drainage Facilities for Airfield Pavements* (to be updated in fiscal year 1989) (U.S. Army 1979), TM 5-820-3, *Drainage and Erosion Control Structures for Airfields and Heliports* (U.S. Army 1978), TM-5-852-7, *Surface Drainage Design for Airfields and Heliports in Arctic and Subarctic Regions* (U.S. Army 1981), CEGS 02710, *Subdrainage Drainage System* (U.S. Army 1989a), CEGS 02720, *Storm Drainage System* (U.S. Army 1989b), and MOGS 02233, *Graded Crushed Aggregate Base* (U.S. Army 1983a). Other Technical Manuals and Guide Specifications in the pavement series reference the above publications with regard to drainage. An Engineering Technical Letter that addresses the drainage issue—ETL 1110-3-381, *Rapid Draining Base Courses for Pavements* (U.S. Army 1988)—is also being revised at this time. Outside of the Department of Defense there is quite a body of work on drainage of pavement structures that has been produced in the last few decades. General material on drainage issues can be found in the work of Cedergren (1974, 1977). This work has spanned decades and involved several state, federal and educational agencies.

## ESTIMATION OF PRECIPITATION, INFILTRATION AND THE FLOW CAPACITY OF DRAINED PAVEMENTS

The first parameter to be determined when designing a well-drained pavement is the amount of water the structure will have to be able to handle. The precipitation that will fall at the specific site, the amount of water the pavement surface will allow to infiltrate and the quantity of water that the pavement will have to be designed to remove in a specified time must be determined before materials for the base and subbase course, collector pipes and other components can be selected and the geometry of the drainage system determined.

This section includes a discussion of the design precipitation event and the amount of water that will infiltrate through the surface of the pavement, a short discussion of infiltration from snow melt and the melting of ice lenses associated with frost heave, and the equations to determine the quantity of water that must be removed from the system and that are used to determine

the thickness of the permeable layers in the pavement.

### Precipitation

Predicting the amount of precipitation available to the pavement surface is probably the single most important parameter for determining the amount of water that will infiltrate into a pavement and therefore needs to be collected by the surface drains or removed by the subsurface drains. The amount of precipitation during the design storm chosen, or the amount of snow melt predicted, controls the amount of water available for infiltration through the pavement surface. The duration and intensity of a given rainfall event are both influential. Ridgeway (1976) believes that duration is the more important factor in determining the amount of free water available to the pavement for infiltration.

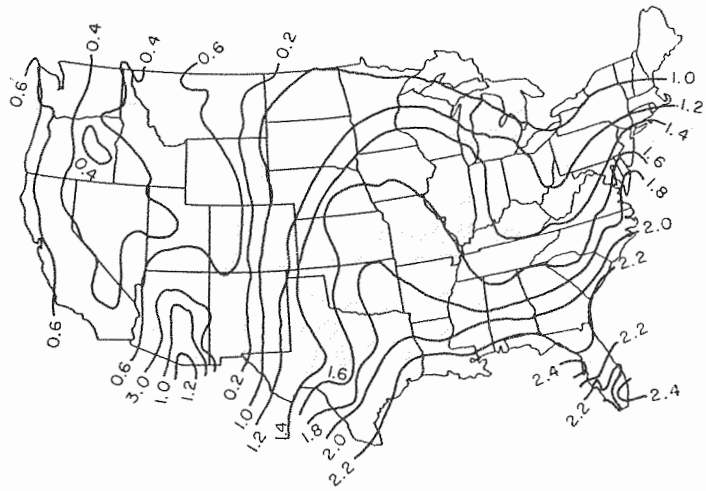


*Figure 1. Design storm index (in.): 1-hour rainfall intensity–frequency data for the lower 48 states (after U.S. Army 1988b).*

In the Corps criteria (U.S. Army 1977), the drainage system capacity is designed using the rainfall rate, $R_i$, a value in inches per hour, for a given design storm. A surface drainage system should be designed to remove runoff from the 2-year design frequency rain event, unless exceptional circumstances require greater capacity. The 2-year design storm is also recommended by TM 5-852-7 (U.S. Army 1981) for airfields and heliports in arctic and subarctic regions. TM 5-852-7 additionally discusses hydrological criteria. Subsurface drainage systems, under new Corps criteria (U.S. Army 1988), will be designed to handle infiltration of water through the pavement from a design storm of 1-hour duration at an expected return frequency of 2 years. Figure 1 shows the design rainfall rate for the continental United States.

Cedergren (1974) bases his infiltration estimates on design precipitation rates developed for the Federal Highway Administration's Guidelines (Cedergren et al. 1973), whose design precipitation rate is the 1-hr/1-yr frequency. Lytton et al. (1990) have developed a precipitation model as part an integrated model of climatic effects on pavements. This model provides simulated raw rainfall data in the form of wet and dry days for each month during the period under consideration, and the amount of rainfall on each wet day.

The amount of water available from snow melt is also simulated in the model by Lytton et al. (1990). They assume that the equivalent amount of moisture that falls in the form of snow during the cold season will infiltrate into the pavement during the first half of the first month of the thawing season, when the average monthly temperature rises above 30°F. Nichols (1987) remarks that the quantity of water associated with melting snow depends not only on the temperature, but also whether or not there is associated rain, and the degree of compaction of the snow during the winter. Nichols does not, however, offer a procedure to quantify the amount of available water.

### Infiltration

Once the amount of precipitation that will fall on the site has been estimated, the portion that will infiltrate through the pavement surface into the structure can be calculated. Additional infiltration by water resulting from ice lenses that form in frost-susceptible soils may also be considered.

Water can infiltrate into a pavement structure through the shoulders, the pavement surface or the sides of the bottom of the pavement layers. The assumptions made about these elements can vary the amount of water estimated to have infiltrated through the pavement surface.

For surface drainage design procedures, the Corps (U.S. Army 1977) considers the pavement surface to be impermeable. However, for the Corps (U.S. Army 1979) subsurface drainage design, the pavement surface is assumed to be permeable.

Ridgeway (1976) assumes that Portland cement concretes and the dense-graded bituminous concretes used in pavement surfaces are virtually impermeable. Therefore, any water infiltrating the pavement surface must enter through either construction joints or cracks that the pavement will develop through its life.

The amount of water entering a crack depends on the crack length and width. Markow (1982) assumes that for cracks, or open joints, covering 50% or more of the pavement surface (a highly cracked pavement), 99% of all water falling on the pavement area will infiltrate.

Alternatively, Cedergren (1974) assumes that bituminous concrete is a permeable material. Cedergren (1974) reports permeability values ranging from several hundred feet per day for unsealed asphalt concrete mixes down to virtually zero for well-sealed pavements. The design infiltration through a permeable pavement can then be calculated as the design precipitation rate multiplied by a coefficient between 0.50 and 0.67 for Portland cement concrete pavements and 0.33 and 0.50 for asphalt concrete pavements (Cedergren et al. 1973).

Ridgeway (1976) states that pavement structures should be designed to drain the following amount of free water that will enter the pavement through its surface. For Portland cement concrete pavements

$$Q = 0.1\left[N + 1\left(W/S\right)\right] \tag{1}$$

and for asphalt pavements

$$Q = 0.1\left[N + 1 + \left(W/40\right)\right] \tag{2}$$

where $Q$ = infiltration amount ($ft^3$/hr per linear ft of pavement)
0.1 = infiltration rate ($ft^3$/hr per ft of crack)
$N$ = number of lanes
$W$ = pavement width (ft)
$S$ = Portland cement concrete slab length (ft)
40 = average distance between transverse cracks (ft).

The above design equations are based on data collected on Connecticut highways. They may be applicable in some areas, but not in others where infiltration rates or crack spacing are different. Lytton et al. (1990) use a variation of these equations.

In addition to Ridgeway's equations, Lytton et al. (1990) allow use of a second equation generated by Dempsey and Robnett (1979) from field data taken in Georgia and Illinois. Four Portland cement concrete pavements (plain, jointed, continuously reinforced and reinforced jointed), with asphalt or bituminous mix shoulders, were monitored to correlate outflow from the pavement drain with precipitation. A regression equation for the drain outflow was developed for each pavement. The equation chosen from Dempsey and Robnett's work for inclusion in the work by Lytton et al. was the one with the highest regression coefficients (eq 3 presented in its original units; 1 $m^3$ = 35.3 $ft^3$)

$$PO = 0.48PV + 0.32 \tag{3}$$

where $PO$ = pipe outflow volume ($m^3$)
$PV$ = precipitation volume ($m^3$).

The FHWA (Moulton 1980) uses a uniform design infiltration rate $q_i$ to be estimated as

$$q_i = I_c\left[\frac{N_c}{W} + \frac{W_c}{WC_s}\right] + k_p \tag{4}$$

where $q_i$ = design infiltration rate ($ft^3$/day per $ft^2$ of drainage layer)
$I_c$ = crack infiltration rate ($ft^3$/day per ft of crack)
$N_c$ = number of contributing longitudinal cracks
$W_c$ = length of contributing transverse cracks of joints
$W$ = width of the granular base or subbase subjected to infiltration
$C_s$ = spacing of transverse cracks or joints
$k_p$ = rate of infiltration, numerically equal to the coefficient of permeability, through the uncracked pavement surface.

For Portland cement concrete pavements and most dense-graded, well-compacted bituminous concrete pavements, the value of $k_p$ in eq 4 is considered relatively insignificant and ignored. For cases where $k_p$ is considered to be significant, design values should be based on laboratory and field tests of the permeability of the surface course material.

Moulton recommends that a value of $I_c$, in eq 4, of 2.4 $ft^3$/day per ft be used for most design applications; however, local observations may indicate a need to increase or decrease the value of $I_c$.

For "normal" cracking or joints in new pavements, $N_c$ in eq 4 can be taken as $N_c = (N + 1)$ where $N$ is the number of traffic lanes. Where the pavement drainage is to be designed for other than "normal" or new pavement cracking, $N_c$ should be taken as the equivalent number of continuous contributing longitudinal cracks.

Moulton recommends that the "normal" value of $C_s$ in eq 4 be taken as the regular transverse joint spacing for new Portland cement concrete pavements and as the anticipated average transverse crack spacing for new continuously reinforced Portland cement concrete and bituminous concrete pavements. However, "normal" transverse cracking as a result of thermal and moisture changes can be extremely variable, especially in continuously reinforced concrete pavements, where such factors as slab thickness and percentage of reinforcement may exert an important influence. Therefore, it is recommended that "normal" design values of $C_s$ be developed on the basis of local observations of regular transverse cracking for the type of pavement under consideration. If, however, the pavement drainage is designed for other than "normal" cracking, then an average crack spacing consistent with the degree of assumed structural damage should be selected.

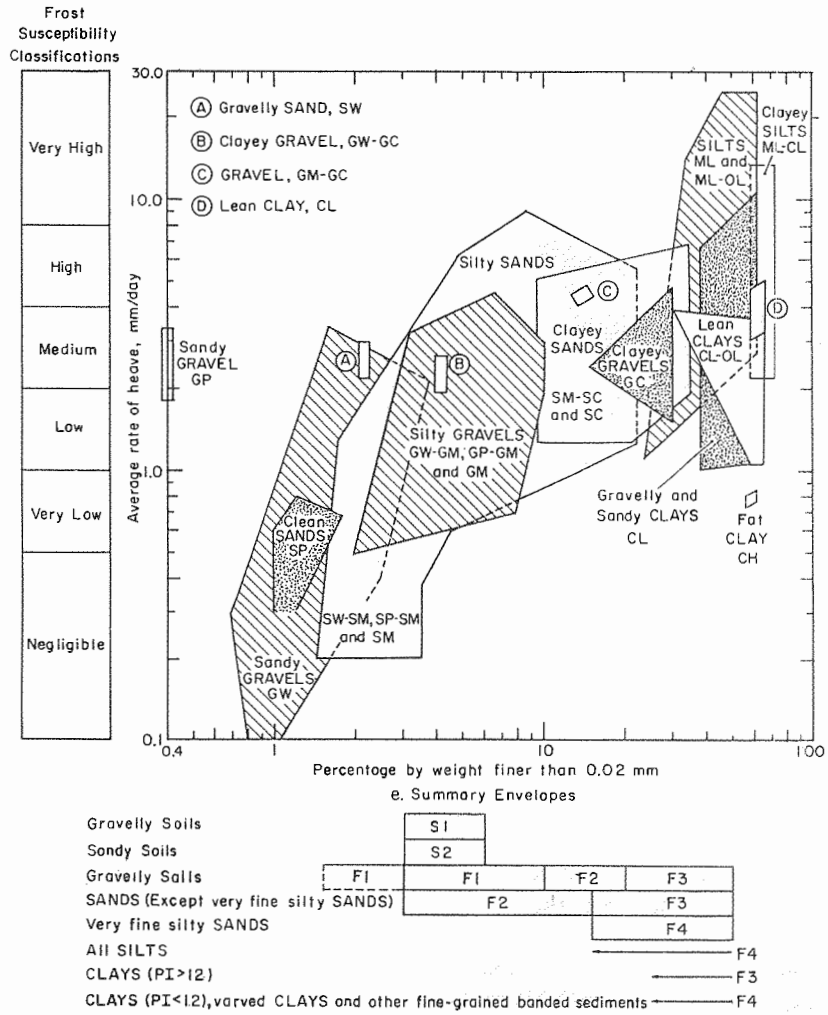


*Figure 2. Frost-susceptibility of soils (from U.S. Army 1985).*

For the Corps (U.S. Army 1988) subsurface drainage design procedure, the quantity of water that infiltrates through the pavement surface is determined by multiplying the design rainfall rate by an infiltration coefficient, $I_c$. This coefficient will vary over the life of the pavement, depending on the type of pavement, surface drainage, pavement maintenance and on the structural condition of the pavement. Since the variation in the coefficient is very large, a single value of 0.5 is recommended for design (U.S. Army 1988). The value of this coefficient may be changed to fit local conditions. The rate of water inflow is then computed by (U.S. Army 1988)

$$q = L \times I_c \times R_i / 12 \qquad (5)$$

where $q$ = rate of water inflow (ft$^3$ per ft of pavement per hr)
$L$ = length of the drainage layer (ft)
$I_c$ = infiltration coefficient (assume 0.5)
$R_i$ = rainfall rate (in./hr).

Water may also infiltrate into the pavement through the subgrade during frost penetration. This water will form ice lenses. As the ice lenses melt, the water will have to be removed through the subsurface drainage system. Moulton (1980) offers an estimate of the design inflow rate $q_m$ of melt water from ice lenses into the pavement base course, based on the frost-susceptibility of the soils involved. Moulton's procedure involves two figures. First, the average heave of the soil is calculated by the laboratory frost heave test or, if laboratory results are not available, estimated using Figure 2. Then, the value for frost heave is entered into Figure 3, and with the the addition of $\sigma_p$, the stress imposed on the subgrade soil by the pavement structure above, a determination of $q_m$, the amount of melt water, can be made.

The rate at which water drains from the consolidating soil is at a maximum immediately following thawing, and decreases quite rapidly as time goes on. Since the maximum rate of drainage exists for only a short time, the design inflow rate of the ice lens melt water $q_m$,

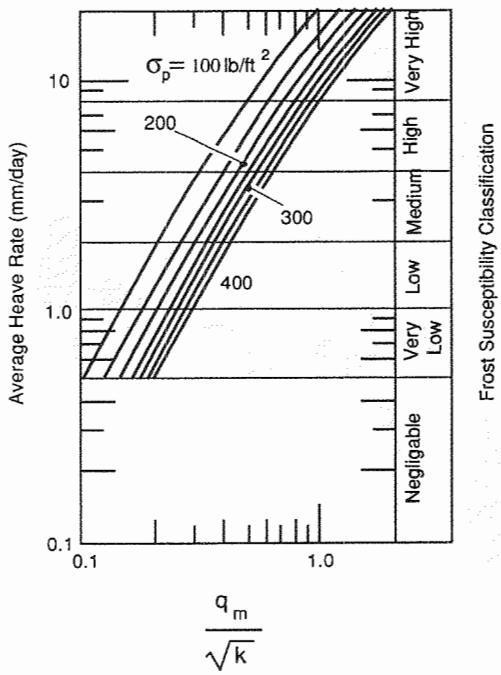


*Figure 3. Estimate of inflow from ice lens melt water (after Moulton 1980).*

presented in Figure 3, is taken as the average inflow rate occurring during the first day (24 hours) following thawing. Although Moulton (1980) states that this is quite conservative, it is possible that pavement drainage layers designed on this basis might become saturated for as much as 6 hours following thawing. If this condition cannot be tolerated, then it may be necessary to design for more rapid drainage.

**Permeability of soils and the quantity of flow**

Once the amount of water that will infiltrate into the pavement structure has been estimated, the capacity of the base and subbase courses that will function as drainage layers to transmit flow must be quantified. The amount of flow that a base and subbase can transmit depends on the permeability of the material, the slope of the layer and the area of the material available for flow.

The coefficient of permeability, slope and thickness of the base layer may all be changed to increase the flow capacity of the layer. Typically, the thickness of a given material is increased to increase the capacity of the layer. Additionally, a limitation on the amount of time for a required percentage of the free water to drain is often specified.

A discussion of Darcy's Law, typically used to describe the relationship between flow, permeability, gradient and flow area, follows.

*Darcy's law and the permeability of soil aggregates*

*Darcy's law.* Modeling flow of water through soils typically involves the assumption that the soil is saturated, and that the water flowing is free water that is being driven by the hydraulic gradient supplied by elevation, often called gravity flow. The equation most commonly used to predict the flow of water through soils is Darcy's law

$$Q = kiA \tag{6}$$

where $Q$ = the quantity of flow ($L^3/T$)
$k$ = coefficient of permeability (hydraulic conductivity [$L/T$])
$i$ = hydraulic gradient ($L/L$)
$A$ = cross-sectional area normal to the direction of flow ($L^2$).

Darcy's law assumes laminar flow, which may not be true for some of the more open-graded aggregates. However, Darcy's law may be used for pavement drainage calculations because the errors caused by using Darcy's law are small in comparison to the variability and errors introduced by other facets of the drainage system, and its design, construction and maintenance.

*Coefficient of permeability.* Using Darcy's law requires a value for the coefficient of permeability, or hydraulic conductivity, $k$. The coefficient of permeability, which has units of velocity, is a measure of the ease with which a fluid can flow through a given medium. In the case of water and soil or aggregate, permeability depends largely on 1) the viscosity of the water flowing through the soil, 2) the water content or degree of saturation of the soil, and 3) the size and continuity of the pore spaces or joints through which the water flows, which, in the case of soil, depend on the size and shape of the soil particles, the density of the soil mass, the

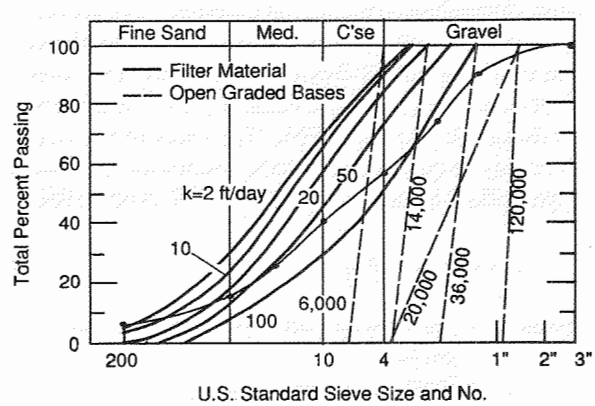


*Figure 4. Typical gradations and permeabilities of open-graded and filter materials (after Cedergren et al. 1973).*

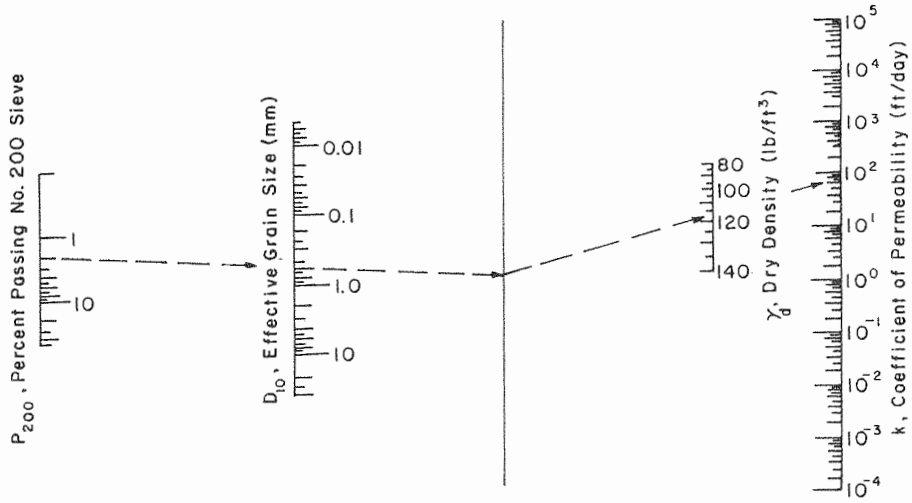


*Figure 5. Nomograph for estimating the coefficient of permeability of granular drainage and filter materials (after Moulton 1980).*

detailed arrangement or structure of the individual soil grains and the presence of discontinuities (Cedergren 1977).

The Corps (U.S. Army 1979) uses eq 7 to define the coefficient of permeability. The equation was developed using Poiseuilles' law and is based on flow through porous media similar to flow through a bundle of capillary tubes

$$K = D_s^2 \frac{\gamma}{\mu} \frac{e^3}{(1+e)} C \tag{7}$$

where $k$ = the coefficient of permeability
$D_s$ = some effective particle diameter
$\gamma$ = unit weight of water
$\mu$ = viscosity of permeant
$e$ = void ratio
$C$ = shape factor.

An estimate of the permeability of typical pavement materials and soils can also be taken from Figure 4, presented by Cedergren et al. (1973) or the nomograph by Moulton (1980), shown in Figure 5. The Hazen equation for loose filter sands may also give an approximation for the coefficient of permeability (AASHTO 1986b)

$$k = 2835 \times 100 \left(D_{10}\right)^2 \tag{8}$$

where $D_{10}$ is the effective grain size of the aggregate.

Ridgeway (1982) and the Corps (U.S. Army 1979) recommend that a correction to the coefficient of permeability be made based on the change in the viscosity of water with temperature. Over the range of temperatures ordinarily encountered in seepage problems, viscosity varies about 100%. This variation is shown in Figure 6.

The coefficient of permeability will vary with the change in viscosity as follows

$$k_1 : k_2 = \mu_1 : \mu_2 \tag{9}$$

where $k_1$ = permeability at temperature 1
$k_2$ = permeability at temperature 2
$\mu_1$ = viscosity at temperature 1
$\mu_2$ = viscosity at temperature 2.

The value of the coefficient of permeability is strongly affected by the presence of air in the soil voids. Therefore, to obtain an accurate laboratory value for the coefficient of permeability of the in-situ soil, test specimen sampling, shipping and preparation must be conducted in such a way to prevent intrusion of air into the soil sample.

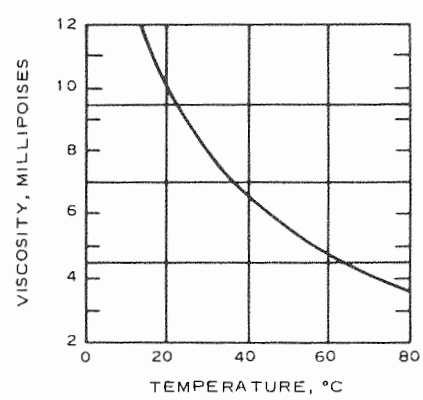


*Figure 6. Variation of the viscosity of water with temperature ($T_F = [T_C \times 1.8] + 32$) (from U.S. Army 1979).*

**Table 1. Permeability based on the no. 100 sieve (after Cedergren 1977).**

| *Percent by weight passing no. 100 sieve* | *Permeability (ft/day)* |
|---|---|
| 0 | 80 to 300 |
| 2 | 10 to 100 |
| 4 | 2 to 50 |
| 6 | 0.5 to 20 |
| 7 | 0.2 to 3 |

**Table 2. Permeability of remolded samples (after U.S. Army 1979).**

| *Percent by weight passing no. 200 sieve* | *Coefficient of permeability for remolded samples (cm/s)* | *(ft/min)* |
|---|---|---|
| 3 | $0.51\times10^{-1}$ | $10^{-1}$ |
| 5 | $0.51\times10^{-2}$ | $10^{-2}$ |
| 10 | $0.51\times10^{-3}$ | $10^{-3}$ |
| 15 | $0.51\times10^{-4}$ | $10^{-4}$ |

Darcy's law, with the assumption of saturated flow, is appropriate for pavement drainage design because the pavement design engineer is interested in unsaturated flow as an analysis tool rather than a design tool. That is, the engineer is more concerned with the moisture conditions caused by unsaturated flow, and their potential effect on soil strength, than with designing a subdrainage system with the principles of unsaturated flow (Ridgeway 1982).

For soils that are not 100% saturated, the higher the degree of saturation of the soil, the higher the permeability. However, the development of a relationship between the two is not feasible because of the great influence of soil fabric or microstructure on the permeability.

The influence of soil particle size, void size and continuity, soil density and soil structure on the permeability of the soil mass are all interrelated. In general, the smaller the particles, the smaller the voids that constitute the flow channels, and the lower the permeability. Also, the shape of the voids has a marked influence on the permeability. No simple relationships have been found between permeability and grain size except for fairly coarse soils with rounded grains. For example, Koenig (as cited in U.S. Army 1979) developed a formula for the permeability of loose filter sands as $k = CD_{10}^{2}$ where $C$ is approximately 100 cm/s (3.3 ft/s) and $D_{10}$ is expressed in centimeters.

The more dense a soil, i.e., the smaller the void ratio, the lower the soil permeability. From the least to most dense condition, permeability may vary 1 to 20 times (U.S. Army 1979). As a general rule, the more narrow the range of particle sizes in granular materials, the less the permeability is influenced by density.

Generally, in-situ soils also show a certain amount of layering. Water-deposited soils usually exhibit a series of horizontal layers that vary in grain-size distribution and permeability. These deposits can be 1 to 100 times more permeable in the horizontal than in the vertical direction. Windblown sand and silts are often more permeable vertically than horizontally because of voids left by decayed plant or grass roots. Many variations in structure and stratification occur, and an understanding of the methods of formation of soils aids in evaluating their engineering properties.

Discontinuities in a soil mass greatly affect the permeability of the material. Holes, fissures and voids caused by frost action, alternate wetting and drying and the effects of vegetation and small organisms may change even the most impervious clay into a porous material. In such a case tests on individual samples may be very misleading. While this does not affect most problems in the field of earthwork and foundation engineering, it is of importance to the use of soil for drainage.

The Corps (U.S. Army 1979) offers further guidance on the estimation of permeability of pavement aggregates. The influence of fines on the permeability of manufactured filter aggregates is illustrated by the data in Table 1. The table presents ranges in permeability of washed aggregates graded from 1 in. to finer than the No. 100 sieve. The permeability is reduced more than three orders of magnitude as the percentage by weight of fine particles smaller that the No. 100 sieve is varied from 0 to 7%.

The coefficient of permeability of sand and gravel courses, graded between limits usually specified by the Corps for base and subbase materials, depends principally upon the percentage by weight of sizes passing the No. 200 mesh sieve (U.S. Army 1979). Table 2 may be used for preliminary estimates of the average coefficient of permeability of remolded samples of these materials. The coefficient of permeability of crushed rock and slag, each without many fines, is generally greater than 0.5 cm/s (0.20 in./s). The coefficient of permeability of sands and sand and gravel mixtures may be approximated from Figure 7.

The coefficient of permeability of a base or subbase course in a horizontal direction (parallel to compaction planes) may be ten times greater than the average value tabulated above. For uniformly graded sand bases, the coefficient of permeability in a horizontal direction may be about four times greater than the value determined by

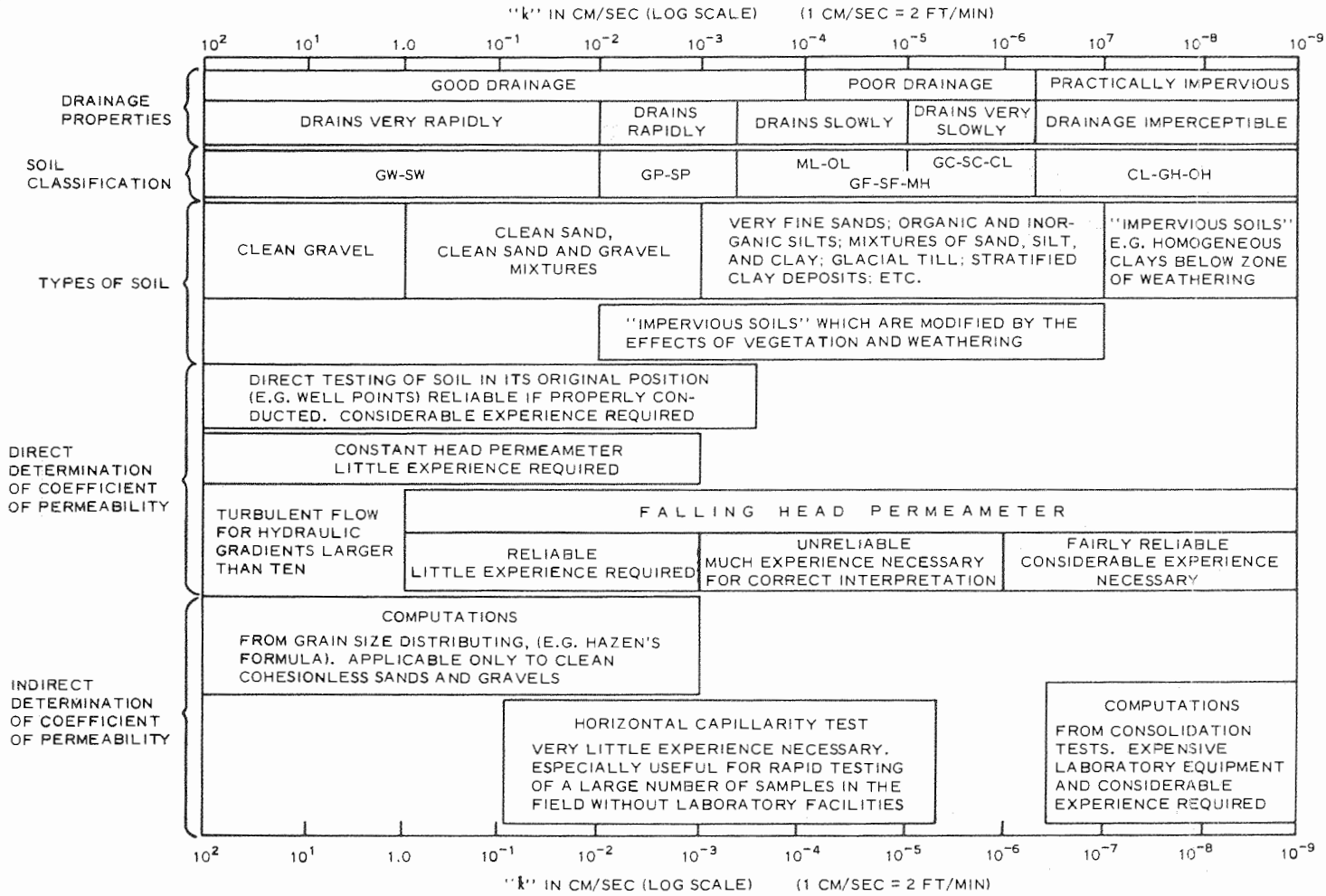


*Figure 7. Permeability chart (from U.S. Army 1979).*

tests on remolded samples. Very pervious base materials, such as crushed rock or slag with few fines, have essentially the same permeability in the vertical and horizontal directions. When more than one material is used for the base and subbase, the weighted coefficient of horizontal permeability determined in accordance with the following formula results in a reasonable design value (U.S. Army 1979)

$$k = \frac{k_1 d_1 + k_2 d_2 + k_3 d_3 + \ldots}{d_1 + d_2 + d_3 + \ldots} \tag{10}$$

where $k$ = weighted coefficient of permeability
$k_1, k_2$ = coefficient of permeability of individual layers
$d_1, d_2$ = thickness of individual layers.

For design, laboratory values of the coefficient of permeability from the constant head or falling head permeability test should be used when possible. A more complete dissertation on fluid flow through porous media is available in texts by Cedergren (1974, 1977).

*Degree of drainage and time constraints to achieve drained conditions*

The Corps (U.S. Army 1979) criteria for removal of water from a base course or subbase layer are based on the degree of drainage. The degree of drainage is defined as the ratio, in percent, of the amount of water drained in a given time to the total amount of water that can possibly drain from a given material. The following formula, based on work done by Casagrande, may be used to determine the time required for a saturated base course to reach a degree of drainage of 50% (U.S. Army 1979)

$$t = \frac{n_e D^2}{2880 k H_0} \tag{11}$$

where $t$ = time (days)
$n_e$ = effective porosity

$k$ = the coefficient of permeability (ft/min)
$D, H_0$ = dimensions of the pavement base course (ft) as shown in Figure 8.

To estimate the volume of water that can be drained from a soil mass in a given time, the effective porosity as well as the permeability must be known. Effective porosity is defined as the ratio of the volume of the voids that can be drained under gravity flow to the total volume of soil, as follows (U.S. Army 1979)

$$n_e = 1 - \frac{\gamma_d}{G_s\,\gamma_w}\left(1 + G_s\,w_e\right) \qquad (12)$$

where $\gamma_d$ = dry density of the specimen
$G_s$ = specific gravity of solids
$\gamma_w$ = unit weight of water
$w_e$ = effective water content (after the specimen has drained water to a constant weight) expressed as a decimal fraction relative to dry weight.

Limited test data for well-graded base-course materials, such as bank-run sands and gravels, indicate a value for effective porosity of not more that 0.15 (U.S. Army 1979). Uniformly graded soils, such as medium or coarse sands, typically have effective porosities of not more that 0.25.

The Corps (U.S. Army 1979) requires that base and subbase courses should be able to attain a 50% degree of drainage in not more than 10 days. Since the time required to drain horizontal layers is a function of the square of the length of the flow path, the flow paths should be as short as possible. This requirement is currently being revised in an Engineering Technical Letter (U.S. Army 1988).

AASHTO (1986a) also has a criterion for rating pavement drainability based on the time for 50% drainage of the free water. AASHTO's rating system is shown in Table 3. AASHTO uses the same equation as the Corps does to calculate the time for drainage (eq 11).

When the time in days determined using eq 11 is greater than 10 days, the spacing between drains can be decreased until the time of drainage is 10 days or less, or a more pervious base and subbase material can be selected or a greater thickness of base and subbase used to improve the design. For most runways and taxiways with widths from crown to edge of not more that 75 ft, a single line of base and subbase drains along the edges should meet the design criteria. In wider pavements, or where reasonably pervious base and subbase course materials are not locally available, it may be necessary to install an intermediate line of drains to provide satisfactory base and subbase drainage.

The degree of drainage to be achieved using the new Corps criteria (U.S. Army 1988) is 85% within 1 day of the end of the precipitation. The drainage layer is to be placed as low in the pavement structure as possible. It should have a filter on both the top and bottom, if necessary, to protect it from infiltration of finer materials from surrounding layers.

*Quantity of flow*

*Base and subbase.* To simplify the analysis and design of base and subbase of drainage, the Corps (U.S. Army 1979) assumes that the base and subbase courses are fully saturated and that there is no inflow during drainage, that the subgrade constitutes an impervious boundary, and that the base and subbase courses have a free outflow into the drain trench.

The Corps uses the following equation, derived from Darcy's Law, to determine the maximum rate of discharge from a saturated base and subbase course of dimensions shown in Figure 8 (U.S. Army 1979)

$$q = \frac{kHH_0}{60\,D} \qquad (13)$$

where $q$ = peak discharge quantity of drain ($ft^3/s$ per linear ft)

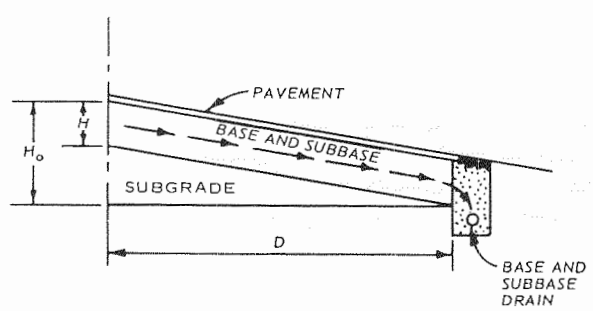


*Figure 8. Pavement dimensions for base course drainage design (from U.S. Army 1979).*

**Table 3. AASHTO quality of drainage criteria (after AASHTO 1986b).**

| *Quality of drainage* | *Water removed within* |
|---|---|
| Excellent | 2 hours |
| Good | 1 day |
| Fair | 1 week |
| Poor | 1 month |
| Very poor | (water will not drain) |

$k$ = coefficient of horizontal permeability (ft/min)

$H$, $H_0$, and $D$ = dimensions as shown in Figure 8.

New Corps criteria (U.S. Army 1988) introduce base course gradations designed to have much higher permeabilities than those previously used by the Corps. The gradations are called open graded and rapid draining. A different equation is used to calculate the flow capacity of these two materials.

The flow capacity of the open-graded and rapid-draining base courses layers, $Q$ in ft$^3$/ft of pavement, is based on the effective porosity ($n_e$) and the volume of water draining from the layer in 1 hour. Since the criteria require a degree of drainage of 0.85 in 24 hours, the assumption is that only 85% of the voids are available for storage of water. The capacity of the layer can be calculated by the following equation (U.S. Army 1988)

$$Q = [0.85\,(n_e)\,(h/12)]\,(L) + k/24(i)\,(t)\,(h/12)/2 \qquad (14)$$

where $Q$ = capacity of the drainage layer (ft$^3$/ft)

$n_e$ = effective porosity

$h$ = thickness of the drainage layer (in.)

$L$ = length of the drainage layer (ft)

$k$ = permeability of the drainage layer (ft/day)

$i$ = slope of the drainage layer (ft/ft)

$t$ = 1 hour (length of design storm).

*Subgrade.* The amount of water that can be removed from subgrade soils by a drain depends on the soil characteristics, such as hydraulic conductivity, density, specific gravity, grain size, particle shape and the location of the drain with respect to the elevation of the groundwater table. Gravity drainage cannot remove all the water in the subgrade. Soil particles will retain thin adhered films of water and the soil structure as a whole will retain water held within the pores by surface-tension forces. In fine-grained soils, the amount of water retained can result in a significant water content value for the soil mass.

To simplify the analysis of drainage of subgrade materials, the Corps (U.S. Army 1979) makes the following assumptions: 1) the subgrade is saturated below the groundwater table, 2) infiltration has raised the groundwater table in the shoulder area adjacent to a subgrade drain as shown in Figure 9, 3) no appreciable quantity of flow develops from the subgrade beneath the paved area, and 4) the drains must have a capacity sufficient to collect the peak flow from the shoulder. This peak flow occurs immediately after the groundwater table has risen to its maximum height, as shown in Figure 9.

The amount of water discharged by the subgrade soil and collected by the drain may be determined using the

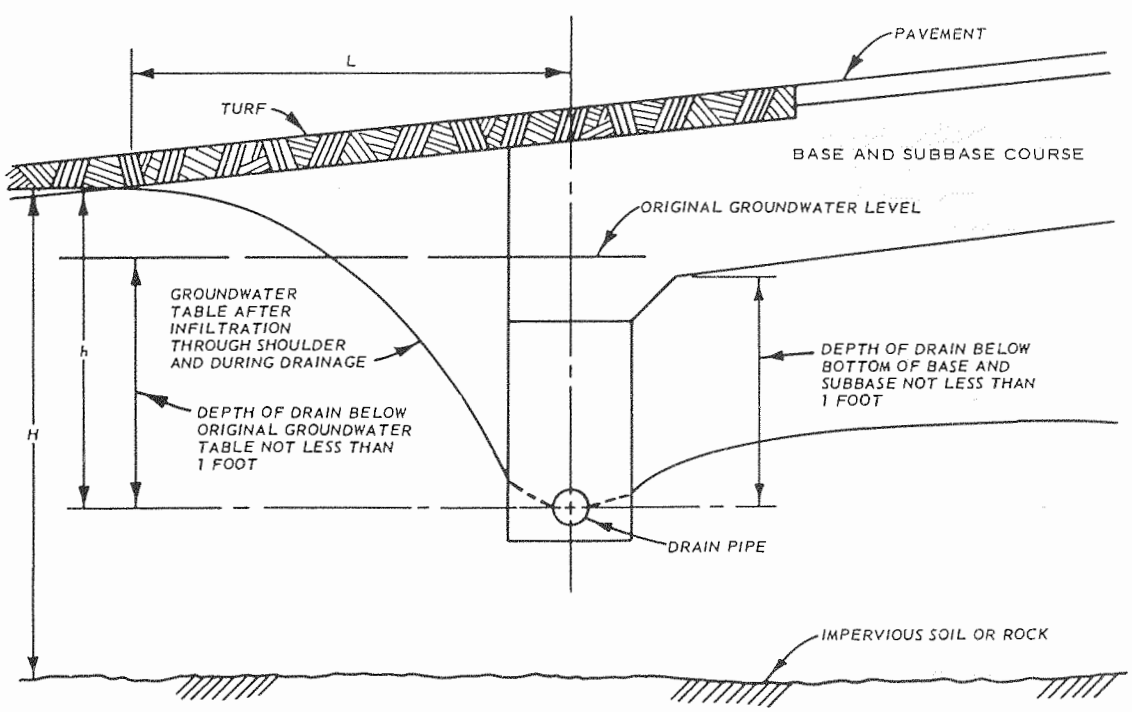


*Figure 9. Groundwater conditions after installation of subdrains (from U.S. Army 1979).*

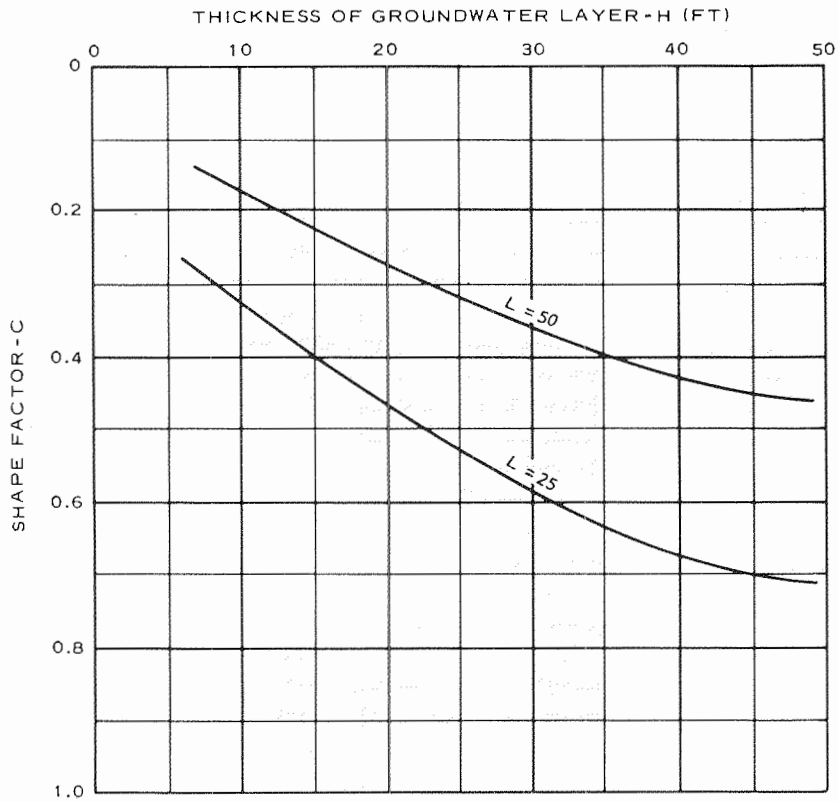


*Figure 10. Thickness of groundwater layer in relation to shape factor (from U.S. Army 1979).*

following formula (U.S. Army 1979)

$$q = \frac{khc}{60} \tag{15}$$

where $q$ = discharge quantity of drain ($ft^3/s$ per linear ft)
$k$ = coefficient of horizontal permeability of soil in the shoulder (ft/min)
$h$ = difference in elevation between the midpoint of the pipe and the ground surface at $L$ distance from the drain as shown in Figure 9 (ft)
$c$ = shape factor dependent upon $L$ and $H$, where $H$ if the thickness in feet of the soil being drained as shown in Figure 9; $c$ is determined from Figure 10 using $L = 50$ for a $k$ larger than 10 ft/min.

## DESIGN OF PAVEMENT DRAINAGE

Once the amount of water that will enter the pavement system has been estimated, the drainage system can be designed. The design of drainage systems involves investigating the site, planning surface grading and ditching, and designing the permeable layers, filters, trenches and collector pipe systems. This section will discuss the design of surface and subsurface drainage for paved roads and airfields, and construction concerns for placing drainage materials. The practice of retrofitting edge drains to pavements exhibiting moisture damage will also be briefly discussed.

### Drainage systems

In a well-drained pavement structure, water that is introduced to the boundaries of the pavement system must be removed, either before it can infiltrate into the pavement or soon after it has infiltrated. Surface drainage removes water from the surface of the pavement before it infiltrates, while subsurface drainage removes water that has infiltrated into the base and subbase through the surface of the pavement, the shoulders, laterally from the surrounding soils or vertically from beneath the pavement profile. The combination of the two functions, surface and subsurface drainage, into one network of pipes is not allowed by the Corps criteria for airfield pavements (U.S. Army 1979).

In a well-drained pavement structure, the drainage systems can be divided into several components, which together function to drain the pavement. These components include 1) a surface graded to promote runoff, 2) ditches, 3) a permeable base or subbase, or both, 4) a drainage trench to hold the collector pipe, 5) collector pipes, 6) filters to prevent soil migration into the pipes and more open-graded aggregates, 7) inlets or catch

basins, and 8) outlets. Construction methods to facilitate installation of improved drainage systems should also be considered in the overall design.

*Surface drainage*

Surface drainage provides for the channeling and fast removal of surface water. A typical surface drainage system includes surfaces graded to promote runoff, ditches, catch basins, collector pipes, and perhaps curbs and gutters. No subdrainage system can perform acceptably without the problem of surface runoff first being adequately addressed. New Jersey reports that "to minimize the amount of surface water entering the pavement, it is obvious that every effort should be made to have a fully effective surface drainage system" (Kozlov 1984). As a part of the surface drainage effort, pavement cracks, through which a large percentage of the infiltrated water flows, must be sealed.

*Subsurface drainage*

A subsurface drainage system is designed to remove 1) water that has infiltrated through the pavement surface and shoulder area of the pavement, 2) melt water from ice lenses formed during frost penetration into the structure and 3) groundwater in areas of high water table. Subsurface drainage may be categorized, according to its purpose, as 1) base and subbase course drainage, 2) subgrade drainage and 3) intercepting drainage. Base and subbase drainage remove water from surface infiltration and ice lens melt, subgrade drainage removes groundwater and intercepting drainage removes water that may flow laterally into the pavement structure.

*Base and subbase drainage*

Base and subbase course drainage typically consists of a permeable base or subbase layer, and buried perforated and unperforated drain pipes laid parallel and adjacent to pavement edges with pervious backfill material connecting the base and subbase course to the drain. The top of the subgrade beneath paved shoulder areas should be sloped to provide drainage to subsurface drainage pipelines. Additional lines of pipe may be required beneath large paved areas with relatively flat slopes to obtain adequate base and subbase course drainage. Sketches of typical base and subbase drains are shown in Figure 11.

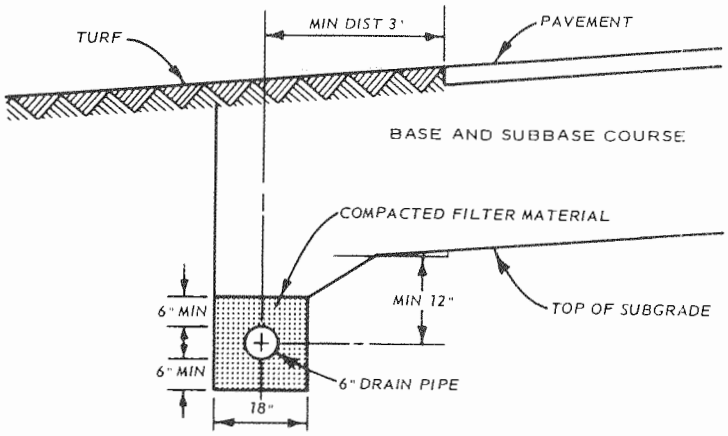


*a. One gradation of filter material.*

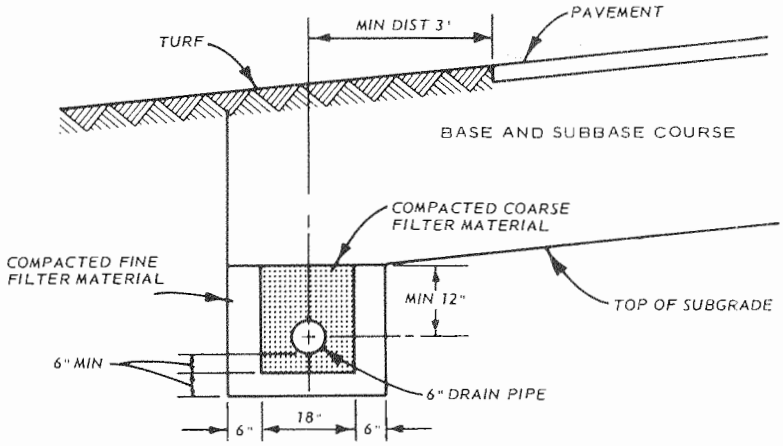


*b. Two gradations of filter material.*

*Figure 11. Typical details of base and subbase drains (from U.S. Army 1979).*

Base and subbase course drainage is required by the Corps in the following cases (U.S. Army 1979, 1988):

1. For all rigid pavements, and for flexible pavements having a structural thickness of 8 in. or more and where the subgrade permeability is less than 20 ft/day, except where it can be shown that water will not be a factor.

2. Where frost action occurs in the subgrade beneath the pavement.

3. Where the groundwater rises to the bottom of the base or subbase course as a result of either seasonal conditions, ponding of surface runoff, or consolidation of soil under the weight of the base and subbase course (U.S. Army 1979).

4. At locations where the pavement may become flooded and the water will not drain on its own because of the impermeability of the subgrade. Subsurface drainage is required if the subgrade coefficient of permeability is smaller than the value shown in Table 4 for the given depths to the groundwater table. Where subgrade soils vary greatly in coefficient of permeability with depth, care should be exercised in determining the need for base and subbase course drainage.

5. At the low point of longitudinal grades in excess of 2%, except where the subgrade coefficient of permeability is $1 \times 10^{-3}$ ft/min or greater.

*Subgrade drainage*

Subgrade drainage primarily removes water from subgrades with high groundwater tables. These drains generally consist of either buried drainpipes or open ditches. The type, location, depth and spacing of drains depend upon the soil characteristics and depth to groundwater table. Sketches of a typical subgrade drainage installation and layout using pipe are shown in Figure 12. Subgrade drainage is required at locations where seasonal variation of the groundwater may raise the top of the water table to within 1 ft of the bottom of the base or subbase course.

*Intercepting drainage*

Circumferential or intercepting drainage is provided to intercept groundwater under artesian pressure found flowing in pervious foundation strata or water flowing horizontally from springs toward the pavement section. The type and depth of drains depend upon the soil and groundwater conditions. These drains may consist of

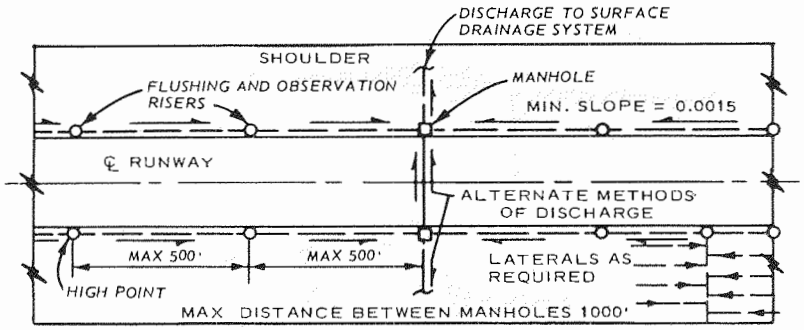


*a. Subsurface drainage system.*

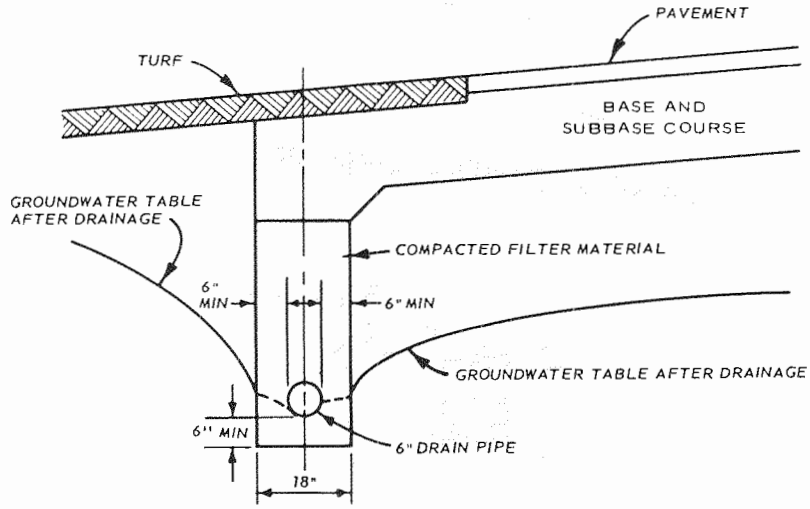


*b. Cross section of subgrade drain.*

*Figure 12. Typical details of subgrade drains (from U.S. Army 1979).*

**Table 4. Subgrade permeability with relation to groundwater depth (after U.S. Army 1979)**

| *Depth to groundwater table (ft)* | *Minimum coefficient of subgrade permeability, k (ft/min)* |
|---|---|
| <8 | $1\times10^{-5}$ |
| 8–25 | $1\times10^{-6}$ |
| >25 | $1\times10^{-7}$ |

either subsurface drainpipes or ditches. Certain applications may use methods such as dry wells that are designed to drain a perched water table into a lower groundwater reservoir. A schematic of a typical pipe installation is shown in Figure 13. Intercepting drainage is required where seeping water in a pervious stratum will raise the groundwater table locally to a depth of less than 1 ft below the bottom of the base and subbase course.

The pipes used for the the different subsurface drainage systems—base and subbase, subgrade and intercepting drainage—are typically combined into one system.

**Preliminary site investigation**

Initial investigations to determine site conditions and the soil parameters for use in the design of a subsurface drainage system should include many of the tasks already planned for the general site investigation for the design of the structure. Topographic surveys and aerial photogrammetric studies of the project area are required to locate all streams, ditches, wells and natural reservoirs and establish general soil and groundwater conditions. Topographic surveys and photogrammetric studies also provide a graphical record showing the extent, boundaries and surface features of soil patterns occurring at the ground surface, the presence of vegetation and the slopes of terrain.

A thorough study of the soils from the site and site conditions that affect the soil behavior is also needed. Specifically, soil characterization tests to determine soil strength, compressibility, swell and dispersion characteristics, in-situ and compacted unit dry weights, coefficient of permeability, in-situ water content, specific gravity, grain-size distribution, effective void ratio and frost-susceptibility are required. Groundwater conditions with location and depth of permanent and perched groundwater tables should be reported and soil profiles drawn. The profiles should indicate the range of coefficients of permeability of major soil strata encountered and the elevations of known and anticipated fluctuations of the groundwater table drawn.

**Surface drainage design**

*Surface grading*

To provide a hydraulic gradient great enough to promote surface runoff, the road should be crowned or super-elevated. An adequate crown also eliminates ponding on the road surface. The grading requirements mandated by the Corps for the pavement surface are as follows (U.S. Army 1977): a minimum gradient of 1.5% in the direction of drainage is recommended, except for rigid pavements where 1.0% is adequate or when existing grades, arid or semiarid conditions, the presence of non-cohesive and free-draining subgrades, and the locations of existing drainage structures indicate that a lower gradient will be acceptable. Nichols (1987) recommends

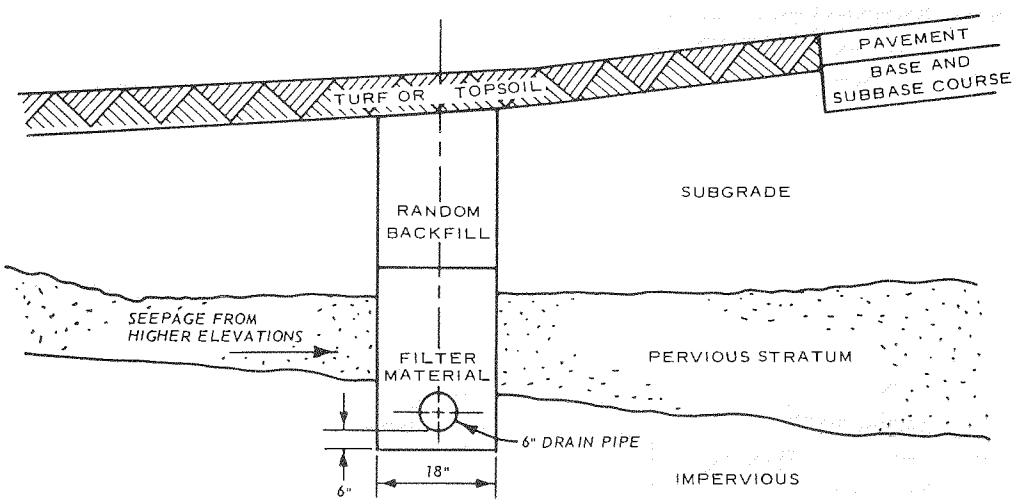


*Figure 13. Typical intercepting drain (from U.S. Army 1979).*

a cross slope of 0.125 to 0.25 in./ft (1.04 to 2.08%) for an asphalt surface. For an aggregate surface Nichols suggests a cross slope between 0.5 and 0.75 in./ft (4.17 to 6.25%).

*Shoulders*

Paved shoulders can decrease the amount of water infiltration substantially. Observations by the state of West Virginia indicated that on new drained pavements, the shoulder areas may be the primary source of infiltration (Baldwin and Long 1987).

Work in the province of Ontario has resulted in pavement designs that include edge drains and paved shoulders to help alleviate moisture infiltration during the winter and spring months. Ontario has observed that during the winter, snow banks that have built up along the roadside restrict the drainage of water from the pavement surface. Melt water, which results from salting and the warming effect of sunlight on the black asphalt surface, remains on the pavement until it either infiltrates through cracks or unpaved shoulders, or evaporates. The province of Ontario advocates partially paved shoulders to reduce infiltration of surface water (MacMaster et al. 1982).

*Ditching*

Ditches should be constructed so that the grade assures proper velocity of flow to help keep the channel clear. Regular maintenance and cleaning will prevent accumulation of debris and encroachment of vegetation. The channel should also be regularly checked for erosion damage.

To increase the capacity of the surface drainage system, the Corps allows temporary surface ponding of the water adjacent to the runway and taxiway aprons on airfield pavements (U.S. Army 1977). However, the possible damage to pavement subgrades and base courses as a result of occasional flooding must be considered. Also, ponding of water should be avoided in arctic and subarctic regions (U.S. Army 1981).

**Base and subbase course design**

Numerous studies have advocated the use of permeable, open-graded base courses to eliminate moisture related pavement problems, such as excess pore water pressures, which may cause pumping, and channelization of flow under Portland cement slabs (Dempsey 1982). The characteristics of a drainable base course are summarized by Kozlov (1984)—it must be open enough to drain water in a reasonable length of time, yet with low enough flow rates to prevent internal erosion; it must be dense enough to support traffic loads; and it must possess filtration characteristics compatible with base and subbase materials.

Drainable base course materials have coefficients of permeability much greater than those of the dense-graded base courses that are commonly used to provide high structural strength. Cedergren (1977) has advocated materials with permeabilities of greater than 1000 ft/day. These materials are typically well- or open-graded gravels with a very small amount of fines.

A reservation to using these open-graded materials is their instability and tendency to rut under construction traffic. Highlands and Hoffman (1987), however, report that instability of the base course was not a problem during construction. Stability varies with the particular gradation of the aggregate. If a stability problem does occur, it can be alleviated by the use of smaller size "choke" stone with the open-graded gravels, or stabilizing the aggregate with asphalt or Portland cement.

Stabilization with asphalt and Portland cement means using just enough binder to completely coat each individual aggregate particle and bind the layer together. In their experimental free-draining test section, the West Virginia Department of Transportation (DOT) used 2% of asphalt by weight, and encountered no stability problems during construction (Baldwin and Long 1987).

Segregation of the open-graded aggregate has also been reported. Smith et al. (1964) report that dampening the mixes during placement can help control this problem.

After placement, under the action of traffic, fine-grained subbase or subgrade materials have the potential to migrate into the base, changing the gradation of the layer and thus reducing the permeability of the drainage material (Dempsey 1982). Use of appropriate filter materials, aggregate or geotextile, will eliminate this migration. Alternatively, stabilization or modification of the subgrade soil may also be effective in preventing intrusion of the subgrade into the base course (Barenberg and Tayabji 1974).

Despite potential problems, several agencies are now using open-graded base courses. The New Jersey DOT (Kozlov 1984) advocates the use of ASTM no. 57 stone, choked with a no. 9 stone in a 50/50 blend, to provide construction stability (Table 5). New Jersey also advocates an asphalt stabilized base course that consists of bitumen, an antistripping agent and aggregate with the gradation shown in Table 6. This gradation can be obtained by modification of the ASTM no. 8 stone with large size aggregate (Kozlov 1984).

The Pennsylvania DOT requires the placement of an open-graded subbase directly below rigid concrete slabs. The gradation of the aggregate is shown in Table 7 (Highlands and Hoffman 1987). Other state and federal agencies are using similar materials.

A restriction on the percentage of material passing a certain sieve size is typical for permeable base courses.

**Table 5. ASTM aggregate gradations (after ASTM 1987).**

| *Sieve size* | *Allowable percent passing* |
|---|---|
| **No. 57 stone** | |
| 1.5 in. | 100 |
| 1 in. | 95–100 |
| 0.5 in. | 25–60 |
| No. 4 | 0–10 |
| No. 8 | 0–5 |
| **No. 9 stone** | |
| 0.375 in. | 100 |
| No. 4 | 85–100 |
| No. 8 | 10–40 |
| No. 16 | 0–10 |
| No. 50 | 0–5 |

**Table 6. New Jersey gradation (after Kozlov 1984).**

| *Sieve size* | *Allowable percent passing* |
|---|---|
| 1 in. | 100 |
| 0.75 in. | 90–100 |
| 0.5 in. | 85–100 |
| 0.375 in. | 60–90 |
| No. 4 | 15–25 |
| No. 8 | 2–10 |
| No 16 | 2–5 |
| No. 200 | — |

For the portion passing the no. 200 sieve, 2% by weight of the total mix of mineral filler should be added. The bitumen content for the mix is 3 ± 0.5% by weight of the total weight of dry aggregate and mineral filler.

**Table 7. Pennsylvania open-graded aggregate (after Highlands 1987).**

| *Sieve size* | *Allowable percent passing* |
|---|---|
| 2 in. | 100 |
| 0.75 in. | 52–100 |
| 0.375 in. | 36–65 |
| No. 4 | 18–40 |
| No. 16 | 0–12 |
| No. 200 | 0–5 |

The percentage passing the no. 100 and 200 sieves and the 2.00-mm sieve are typically chosen for restriction. The coefficient of permeability of sand and gravel materials, graded between limits usually specified by the Corps for cement or asphalt stabilized material, depends principally upon the percentage by weight of particles passing the no. 200 sieve (U.S. Army 1979). The influence of fines on the permeability of manufactured filter aggregates is illustrated by the data in Table 1. The table presents ranges in permeability of washed aggregates graded from 1 in. to finer than the no. 100 sieve. The permeability is reduced more than three orders of magnitude as the percentage by weight of fine particles smaller that the no. 100 sieve is varied from 0 to 7%. Nichols (1987) suggests less than 10% fines (e.g., silt) in gravel base course materials.

For the last several years, the Corps only recommended one gradation for drainable base course materials, and this material was only required in areas that experienced seasonal frost. This gradation is designated as "free-draining" base material. The manual for pavement design in for seasonal frost areas (U.S. Army 1985) defines the specifications for the free-draining base course. The manual states:

> "that if the combined thickness, in inches, of pavement and contiguous bound base courses is less than 0.09 multiplied by the design freezing index (this calculation limits the design freezing index at the bottom of the bound base to about 20 degree-days), not less than 4 inches of "free draining" material shall be placed directly beneath the lower layer of bound base or, if there is no bound base, directly beneath the pavement slab or surface course."

If the structural criteria for design of the pavement do not require granular unbound base other than the 4 in. of free-draining material, the material in the 4-in. layer must be checked for conformance with the filter requirement. If it fails the test of conformance, an additional filter layer meeting those requirements must be provided (U.S. Army 1985).

The free-draining base material contains 2.0% or less, by weight, passing the no. 200 sieve (Table 8). Screening and washing the material may be necessary to meet the gradation requirements. The material in the 4-in. layer must also conform with the filter requirements prescribed by the Corps.

**Table 8. Free-draining, open-graded and rapid-draining aggregates (after U.S. Army 1989b).**

| | | *Drainage layer material* | |
|---|---|---|---|
| *Sieve designation* | *Free-draining base* | *Rapid-draining base* | *Open-graded base* |
| 1.5-in. | 70–100 | 100 | 100 |
| 1-in. | 45–80 | 70–100 | 100 |
| 0.75-in. | — | 55–100 | 90–100 |
| 0.5-in. | -60 | 40–80 | 40–80 |
| 0.375-in. | — | 30–65 | 30–50 |
| no. 4 | 20–50 | 10–50 | -5 |
| no. 8 | — | 0–25 | 0–2 |
| no. 10 | 16–40 | — | — |
| no. 16 | — | 0–5 | — |
| no. 40 | 5–25 | — | — |
| no.100 | 0–10 | — | — |
| no. 200 | 0–2 | — | — |

**Table 9. Additional properties of open-graded and rapid-draining mixes (after U.S. Army 1989b).**

| | *Permeability (ft/day)* | *Percent fractured faces** | $C_v$† | $C_c$** | *LA abrasion* |
|---|---|---|---|---|---|
| Rapid-draining material | 1000–5000 | 90% for 80 CBR<br>75% for 50 CBR | >3.5 | 0.9< × <4.0 | <30 |
| Open-graded material | >5000 | 90% for 80 CBR<br>75% for 50 CBR | — | — | <30 |

* Corps of Engineers method.
† Uniformity coefficient = $D_{60}/D_{10}$.
** Coefficient of curvature = $D_{30}^2/(D_{10} \times D_{60})$.

A new Corps document (update of U.S. Army 1988) defines two new gradations for permeable base courses and eliminates the need for the older free-draining base. Based on recent literature reviews, site visits and laboratory work conducted by the Waterways Experiment Station, this draft Engineering Technical Letter advocates the use of coarser graded aggregates for the drainage layer within the pavement system. The two base materials are defined as follows: rapid-draining base with a permeability between 1000 and 5000 ft/day and open-graded base with a permeability exceeding 5000 ft/day (Table 8). Additional properties of the mixes are shown in Table 9.

The drainage layer is to be placed as low in the pavement structure as possible. It should have a filter on both the top and bottom, if necessary, to protect it from infiltration of finer materials from surrounding layers.

The layer thickness $h$ required is calculated by setting the capacity (eq 14) equal to the infiltration (eq 5), which results in the following equation (U.S. Army 1988)

$$h = 48\ FRL/[40.8\ n_e L + ki]\ . \qquad (16)$$

If the term ($ki$) is small in comparison to the term (40.8 $n_e L$), which is typically the case for long drainage paths, than the equation can be simplified to

$$h = (FR)/(0.85\ n_e) \qquad (17)$$

where $L$ = length of drainage path (ft)
$F$ = infiltration coefficient
$R$ = design rainfall (in./hr)
$n_e$ = effective porosity
$k$ = permeability of the drainage layer (ft/day)
$i$ = slope of the drainage path (ft/ft)
$h$ = thickness of the drainage layer (in.).

In no case should the thickness of the drainage layer be less than 4 in.

To improve the stability and strength or to prevent degradation of the aggregate during handling, the rapid-draining and open-graded mixes may be stabilized either with choke stone or a binder. The choke stone is a hard, durable crushed aggregate having 90% fractured faces.

The Corps (U.S. Army 1983) defines a piece of aggregate as having fractured faces if it has two or more freshly fractured faces with the area of each face being at least equal to 75% of the smallest midsectional area of the piece. When two fractures are contiguous, the angle between planes of the fractures must be at least 30° to count as two fractures faces. The ratio of the $D_{15}$ of the coarse aggregate to the $D_{15}$ of the choke stone must be less than 5 and the ratio of the $D_{50}$ of the coarse aggregate to the $D_{50}$ of the choke stone must be greater than 2.

Both cement and asphalt are acceptable binders, and only enough asphalt or cement paste to coat the aggregate should be used. The voids should not be filled with excess binder.

**Filter design**

In drainage systems for pavement structures there are three locations where filter layers, either appropriately graded aggregates or geotextile fabrics, are typically found: 1) between the base or subbase course and the subgrade, 2) around the drainage trench, and 3) around the perforated collector pipe. If the trench backfill itself is specified appropriately as a filter between the base course and the perforated pipe, a filter around the perforated pipe, or an additional filter for the subgrade around the drainage trench, may not be required.

Filter material used to backfill the drainage trench, or between an open-graded base course and subgrade, must meet three general requirements: 1) it must prevent finer material from piping or migrating into the drainage layer or pipe and clogging it, 2) it must be permeable enough to carry water without any significant resistance and 3) it must be strong enough to carry loads applied to it, and prevent damage to the pipe or provide for distribution of loads to the subgrade.

Observation has shown that fine-grained subgrade soils will migrate into a coarse, open-graded overlying gravel or crushed stone base course under the kneading action of traffic or, alternatively, the open-graded aggregates will be pushed into the subgrade soils under the the stresses induced by traffic.

Barker (1990) indicates that the major consideration in designing a layer to be placed between the base or subbase and subgrade is to keep the base course material from punching into the subgrade. This implies that the most important aspect of the layer design is the structural

strength, with the permeability and relative grain size being secondary considerations. Such a layer should be designated as a separator layer rather than a filter layer and should be of subbase quality, be nonerodible and be somewhat more permeable than the subgrade.

Subgrade fines are likely to migrate into open-graded base courses, however, during the frost-melting period (U.S. Army 1985). For this reason, a layer designed to perform as a filter course is required between subgrade and base course materials if the base course does not meet specifications discussed below to prevent migration of the subgrade material into the base in areas that experience seasonal frost.

*Filters over subgrade for frost areas*

In seasonal frost areas, a minimum of 4 in. of the bottom of the base course is designated as a filter layer (U.S. Army 1985). The filter layer is required for both rigid and flexible pavements. The thickness of filter does not reduce the the required thickness of the free-draining base layer or the amount of flow that the drainage layer must carry.

The filter layer should consist of sand, gravelly sand, screenings or similar material, and the gradation of the filter material should be in accordance with general granular filter criteria mandated by the Crops, with the added overriding limitation that the material must be non-frost-susceptible, or of frost group S1 or S2.

The 4-in. minimum filter thickness is determined primarily by construction requirements and limitations. Greater thicknesses should be specified when required. Over weak subgrades, a 6-in. or greater thickness may be necessary to support construction equipment and to provide a working platform for placement and compaction of the base course.

*Aggregate filters and trench backfill*

In Corps documents (U.S. Army 1979), trench backfill material is often called filter material, reflecting its role as a filter between base course or subgrade materials, or both, and perforations in the drainage pipe. When the backfill is specified so that it serves as a filter, the aggregate prevents the movement of particles of the soil being drained, is permeable enough to allow free water to enter the pipe, and yet is coarse enough not to migrate into open joints and perforations of the pipe. Backfill should be designed to maintain progressively greater outflow capabilities in the direction of flow. It must also carry any vehicle loading without allowing the pipe to be damaged.

Typically, the backfill used in trench drains is the same material as that used for the base course. If this material is not graded so that it meets typical filter criteria between it and the surrounding soil or between the material and the pipe perforations, then either an additional granular or geotextile filter is required.

A minimum thickness of 6 in. of granular filter material should be provided around all types of subsurface drains (U.S. Army 1979). From the standpoint of simpler construction and lower costs, a single layer of filter material should be used whenever possible. If several layers of filter material are required, each layer must be designed in accordance with the filter criteria stated in this section.

*Gradation requirements for aggregate filters*

The Corps filter criteria result from work proposed by Terzaghi and substantiated by Corps of Engineers tests on protective filters used in the construction of earth dams (U.S. Army 1979). The criteria for the gradation of granular filters and pipe perforation sizing are intended to keep the protected soil particles from entering the filter or pipe in significant quantities. The criteria are based on the particle sizes of the filter material and the protected soil.

The criteria for preventing movement of particles of the protected soil into or through the filter or filters are (U.S. Army 1979):

$$\frac{\text{15\% size of filter material}}{\text{85\% size of protected soil}} \leq 5 \qquad (18)$$

and

$$\frac{\text{50\% size of filter material}}{\text{50\% size of protected soil}} \leq 25 \ . \qquad (19)$$

The above criteria are used for the protection of all soils except for nondispersive medium to highly plastic clays without sand or silt particles, which by the above criteria may require multiple-stage filters. For these clay soils, the $D_{15}$ size of the filter may be as great as 0.4 mm and the above $D_{50}$ criteria will be disregarded (U.S. Army 1979). This relaxation in criteria for protecting medium to highly plastic clays will allow the use of a single-stage filter material; however, the filter must be well graded, and have a coefficient of uniformity of not greater than 20 to minimize the tendency of the gradation to segregate. For dispersive clays, filter tests will be conducted to evaluate the effectiveness of the proposed filter material. Additional information on the use of granular filters with dispersive clays is given by Perry (1975).

When pipes are placed in backfilled trenches, no unplugged ends should be allowed and the filter material in contact with pipes must be coarse enough not to enter

the perforations or openings. To prevent clogging of the pipe with filter material, the following criteria must be satisfied (U.S. Army 1979). For slots

$$\frac{\text{85\% size of filter material}}{\text{slot width}} > 1.2 \qquad (20)$$

and for circular holes

$$\frac{\text{85\% size of filter material}}{\text{hole diameter}} > 1.0\,. \qquad (21)$$

For subgrade water to reach the pipe easily, the filter material must be many times more pervious than the protected soil. The following criterion ensures sufficient permeability of the backfill material (U.S. Army 1979)

$$\frac{\text{15\% size of filter material}}{\text{15\% size of protected soil}} \geq 5\,. \qquad (22)$$

In specifying a suitable filter material, the gradation of filters within the zone of frost penetration should be examined with respect to frost-susceptibility. For the design of filters in frost-susceptible areas, the criteria stated previously should be taken into account.

If there is a problem finding a gradation that satisfies both the criterion that it be a filter for the drained soil and the requirement to prevent migration into the pipe openings, a geotextile may be used in the place of an additional granular filter layer. Between the filter fabric and the protected soil, requirements stated pertaining to the adjacent granular material should be satisfied. This use of filter cloth is restricted to situations where the soil to be protected is sand (SW, SP, SW-SM). For protection of the pipe openings, a filter fabric with openings approximately the size of the no. 40 sieve, wrapped around open joints of unperforated pipe or around the entire length of perforated of unperforated pipe, is appropriate. Additional information on geotextile filters follows.

Moulton (1980) has adopted several of the Corps filter criteria for his design procedure. Moulton specifies eq 12, 13, 16 and 20 with the addition of the following

$$D_5 \text{ filter} \geq 0.074 \text{ mm}. \qquad (23)$$

The requirement of eq 20 can be waived if the soil to be protected is a medium to high plasticity clay. When the soil to be protected contains a substantial amount of coarse material, the design should be based on the gradation of the portion finer than the 1-in. sieve (Moulton 1980).

*Geotextile filters*

With the increase in the number of manufacturers, and the different properties of the fabrics that can be obtained, the use of geotextiles in filter applications has become more common. Both the Corps and other agencies recommend geotextile fabrics if they are properly specified for the soils with which they are to interact.

Geotextile filters are defined by Corps criteria (U.S. Army 1989a) as pervious sheets of polyester, nylon or polypropylene filaments, woven or otherwise formed into a uniform pattern with distinct and measurable openings. The guide specification for subdrainage systems provides a blank for specifying a grab strength of the fabric in accordance with ASTM D 1682 testing. The fabrics should also be resistant to deterioration from heat and ultraviolet exposure.

The most extensive criteria provided by the Corps (U.S. Army 1989a) for geotextile filter fabrics are based on values of the Equivalent Opening Size (EOS), Percent Open Area (POA), and the permeability of the geotextile ($K_s$) as shown in Table 10. The EOS is defined as the number of the U.S. standard sieve having openings closest in size to the largest openings in the fabric. The EOS is used to specify both woven and nonwoven geotextiles, and is a means of evaluating the piping resistance of the fabric. The POA is used only for woven geotextiles, and is intended to assure adequate flow

**Table 10. Geotextile criteria (after U.S. Army 1989).**

| *Protected soil passing no. 200 sieve (%)* | *Piping maximum EOS (mm)** | *Minimum POA* | |
|---|---|---|---|
| | | *Woven* | *Nonwoven* |
| < 5 | $D_{85}$ | 10% | $K_s$ |
| 5–50 | $D_{85}$† | 4% | $K_s$** |
| 50–85 | $D_{85}$ Upper limit on EOS is EOS (mm) = 0.212 mm (no. 70 U.S. standard sieve) | 4% | $K_s$ |
| > 85 | $D_{85}$ Lower limit on EOS is EOS (mm) = 0.125 mm (no. 120 U.S. standard sieve) | | $K_s$ |

* When the protected soil contains appreciable quantities (20 to 30%) of material retained on the no. 4 sieve, use only the soil passing the no. 4 sieve in selecting the EOS of the filter fabric. The EOS requirement should be specified as a range to allow for manufacturing tolerances. The smallest sieve opening size of the EOS range should not be smaller than the openings of a U.S. Standard Sieve Size no. 120 (0.125 mm). It is preferable to specify a filter fabric with openings as large as allowed by the criteria.

†$D_{85}$ is the grain size in millimeters for which 85 percent of the sample by weight has smaller grains.

**$K_s$ is the permeability of the protected soil.

**Table 11. Geotextile strength criteria (after U.S. Army 1989a). Filter fabrics used to wrap collector pipes should be surrounded by at least 6 in. of granular material. If filter fabric is used to line a trench, the collector pipe should be separated from the fabric by a minimum of 6 in. of granular backfill material.**

| *Type* | *Minimum* | *Test* |
|---|---|---|
| Tensile | 100 lb | ASTM D 1682 grab test, 1 in. square and 12 in. per minute constant rate of traverse. |
| Elongation | 15% | ASTM D 1682, determine apparent breaking elongation. |
| Puncture | 40 lb | ASTM D 3787, except polished steel ball replaced with a 5/16-in.-diameter solid steel cylinder with a hemispherical tip centered within the ring clamp. |
| Tear | 25 lb | ASTM D 1117, trapezoidal tear strength. |

through the fabric and adequate resistance to clogging over time. The permeability test is used for both woven and nonwoven fabrics and measures the ability of the fabric to pass water without any soil on or in the fabric.

Geotextile strength requirements vary with the application of the fabric and construction procedures. Experience has shown that when a heavier nonwoven fabric is used, the bedding material can often be reduced in thickness or completely eliminated. Recommended values are shown in Table 11.

Ridgeway (1982) recommends the Corps criteria for filter fabrics as a design guide for selection of geotextiles for drainage systems. AASHTO (1986b) presents filter fabric criteria that are very close to those presented by the Corps (Table 12).

*Position of filter fabric*

The FHWA (Baumgardner and Mathis 1989) canvassed State DOTs to find out how they designed drainage for rigid concrete pavement construction. They found that the placement of filter fabric is perhaps the most difficult and controversial item in the edge drain design. Three distinct design approaches are reported.

In the first approach, the entire perimeter of the trench is wrapped in filter fabric to separate the backfill from the subgrade, base, subbase and whatever material covers the trench (Fig. 14a). Any fines that may erode from or migrate through the base course have the potential to clog the filter fabric. The Corps (U.S. Army 1989a) requires that if a geotextile is used to line the drainage trench, the pipe should be separated from the fabric by a minimum of 6 in. of granular backfill.

The second approach leaves the interface between the trench backfill and the base and slab open. Therefore, any fines washed through the base will not clog the fabric, but may clog the pipe itself. This approach would have the shortest time to drain and thus the least time of saturation (Fig. 14b).

The third approach is a compromise in which the pipe itself is wrapped in a filter fabric and the trench is backfilled with a material that meets the filter requirements for the surrounding soils, such as a coarse sand (Fig. 14c). This backfill material will have a coefficient of permeability much lower than the open-graded aggregates used in the other two approaches.

The Corps (U.S. Army 1989a) requires that when filter fabrics are used to wrap collector pipes, at least 6 in. of granular material should surround them.

Baumgardner and Mathis (1989) point out that in all of these approaches any erodible fines in the base course will still be washed out. The difference in the approaches is the manner in which fines are handled.

Baumgardner also noted that there is no way to prevent a filter adjacent to a material with a high percentage of fines from eventually clogging. If there are no voids between the filter material cloth and the adjacent material to be drained or if the voids are small, the filter won't clog as rapidly, and will function for a longer period. If, however, voids are present between the material to be drained and the filter, soil particles can go into suspension and will eventually clog the filter; therefore, filter fabrics need to be in intimate contact with the material to be drained.

**Collector pipe**

To remove water quickly once it has been collected by the base and subbase, the subgrade or other pervious

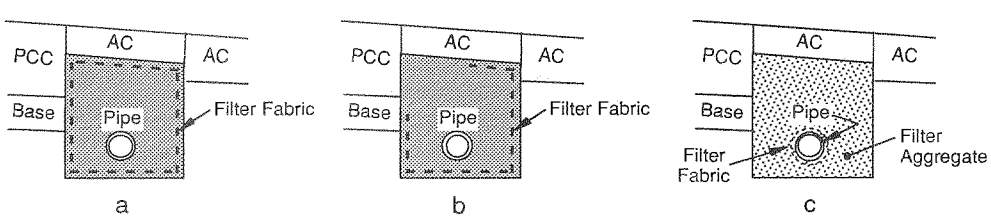


*Figure 14. Geotextile placement in subsurface drains (after Baumgardner and Mathis 1989).*

**Table 12. AASHTO geotextile criteria (after AASHTO 1986b).**

**I. Piping resistance (soil retention—all applications).**

A. Soils with 50% or less particles by weight passing U.S. no. 200 sieve:

EOS no. (fabric) ≥ 30 sieve.

B. Soils with more than 50% particles by weight passing U.S. no. 200 sieve:

EOS no. (fabric) ≥ 50 sieve.

*Notes:*

1. Whenever possible, fabric with the lowest possible Equivalent Opening Size (EOS) no. should be specified.

2. When the protected soil contains particles from 1-in. size to those passing the U.S. no 200 sieve, use only the gradation of soil passing U.S. no. 4 sieve in selecting the fabric.

**II. Permeability.**

| *Critical/severe applications** | *Normal applications* |
|---|---|
| $k$ (fabric) ≥ 10 $k$ (soil) | $k$ (fabric) ≥ $k$ (soil) |

* Woven monofilament fabrics only: percent open area ≥ 4.0 and EOS no. 100 sieve.

**III. Chemical composition requirements and considerations.**

A. Fibers used in the manufacture of civil engineering fabrics shall consist of a long chain synthetic polymer, composed of at least 85% by weight polyolephins, polyesters or polyamides. These fabrics shall resist deterioration from ultraviolet exposure.

B. The engineering fabric shall be exposed to ultraviolet radiation (sunlight) no more than 30 days total in the period of time following manufacture until the fabric is covered with soil, rock, concrete, etc.

**IV. Physical property requirements (all fabrics).***

| | *Fabric* | |
|---|---|---|
| | *unprotected* | *protected*†† |
| Grab strength (ASTM D-1682) (minimum strength in either principal direction) | 180 lb | 80 lb |
| Puncture strength (ASTM D-751-68)† | 80 lb | 25 lb |
| Burst strength (ASTM D-751-68)** | 290 lb/in.$^2$ | 130 lb/in.$^2$ |
| Trapezoid tear (ASTM D-1117) (any direction) | 50 lb | 25 lb |

* All numerical values represent minimum average roll values (i.e., any roll in a lot should meet or exceed the minimum values in the table).

† Tension testing machine with ring clamp, steel ball replaced with a 5/16-in.-diameter solid steel cylinder with hemispherical tip centered within the ring clamp.

** Diaphragm test method.

†† Fabric is said to be protected when used in drainage trenches or beneath/behind concrete (Portland or asphalt cement) slabs. All other conditions are said to be unprotected. Examples of each condition are:

Protected: Highway edge drains, blanket drains, smooth, stable trenches less than 10 ft deep. In trenches in which the aggregate is extra sharp, additional puncture resistance may be necessary.

Unprotected: Stabilization trenches, interceptor drains on cut slopes, rocky or caving trenches or smooth, stable trenches more that 10 ft deep.

strata, perforated pipes are placed adjacent to the water-bearing material. From the perforated pipes, it is typical to use solid-walled pipe to remove the water from the vicinity to ditches or over embankments, which will channel the water to a natural water course or some other area away from the pavement.

The top of the subgrade beneath paved shoulder areas should be sloped to provide drainage to subsurface pipelines. A sketch of a typical base and subbase drain is shown in Figure 11.

Perforated collector pipes are typically placed longitudinally, along one or both edges of a pavement, within the shoulder, with pervious backfill material connecting the base and subbase course to the drain. For airfields, or large parking areas where placing the drain only at the edge of the pavement would result in a drainage path of unacceptable length, drains are placed typically along a center line or at some other interval beneath the pavement. In especially wet areas, and sometimes in rigid pavement construction, drains are place transversely within the pavement. In the case of jointed Portland cement concrete pavements, drains have been constructed under the joint areas to remove water that will infiltrate at this area if the joint sealer does not provide complete protection (Better Roads 1990).

The practice of extending the base course to the surface of the ground on the embankment slope beyond the shoulder, or "daylighting" the base course, and not including a collector pipe, is not recommended. It is common for this type of system to become clogged and cease to function.

*Transverse drains*

Transverse drains are typically used in areas where the grade of the road is greater than the slope or cross slope of the section and, therefore, water is more apt to run parallel to the centerline than perpendicular and out of the pavement section. Sag curves are typical location for transverse drains.

Recently, the state of Wisconsin has been placing transverse drainage under transverse joints on newly constructed Portland cement concrete to channel water as soon as it enters the pavement system (ACPA 1989).

*Longitudinal drains*

The drain itself can be constructed in several different methods and still be effective. A trench drain with a perforated pipe and backfill graded to provide both a permeable path and a filter for the surrounding soil is common. The use of a geotextile envelope, either around the pipe itself or around the backfilled trench, is a common method to provide a filter between adjacent soils or the soil and the perforated pipe. Geocomposites, or fin drains, are gaining popularity and with new technology can easily be placed without a large amount of backfill. Geocomposites also lend themselves to retrofitting into thin slots cut in the pavement and base course along the lane–shoulder interface.

*Subgrade drains*

The Corps requires (U.S. Army 1979) that subgrade drain pipes be placed at a depth of not less than 1 ft below the bottom of the base and subbase course and not less that 1 ft below the groundwater table. Frequently, depth of cover is controlled by frost conditions or loading requirements. Subgrade drains are generally required only at pavement edges.

*Intercepting drains*

Intercepting drains are placed in the impervious layer immediately below the intercepted seepage or water bearing layer where it is at a reasonable depth (Fig. 13). The construction of intercepting drains requires careful workmanship and close supervision to allow for the varying slope and direction of the seepage layer.

The amount of water collected by an intercepting drain is often difficult to determine. In general, 6-in. drainpipe in lengths of not over 1000 ft will have adequate capacity (U.S. Army 1979).

*Specification of pipes*

Various types of standard manufactured pipe may be used in subsurface drainage systems. The type of pipe selected should meet design requirements for site conditions such as soil type, required loading and amount of cover. Issues of cost and the availability of pipe should be considered. The following types of pipe are listed by the Corps (U.S. Army 1979) as available—perforated, bell and spigot, cradle invert (skip), porous concrete, bituminized fiber, farm tile and plastic.

Pipe selection involves consideration of factors including strength under either maximum or minimum cover provided, pipe bedding and backfill conditions, anticipated loadings, length of pipe sections, ease of installation, resistance to corrosive action by liquids carried or surrounding soil materials, suitability of jointing methods, provisions for expected deflection without adverse effects on the pipe structure or on the joints or overlying materials, and cost of maintenance (U.S. Army 1978).

Except for long intercepting lines and drains at sites with extremely severe groundwater conditions, the Corps (U.S. Army 1979) states that 6-in.-diameter pipes are satisfactory for all subsurface drainage installations. However, infiltration calculations for subsurface flows (eq 15) should be used to check if the flow available will be too great for the capacity of a 6-in. pipe.

The nomograph shown in Figure 15 may be used to design drainpipes for subsurface drains. The values to be used for the coefficient of roughness $n$ are as follows:

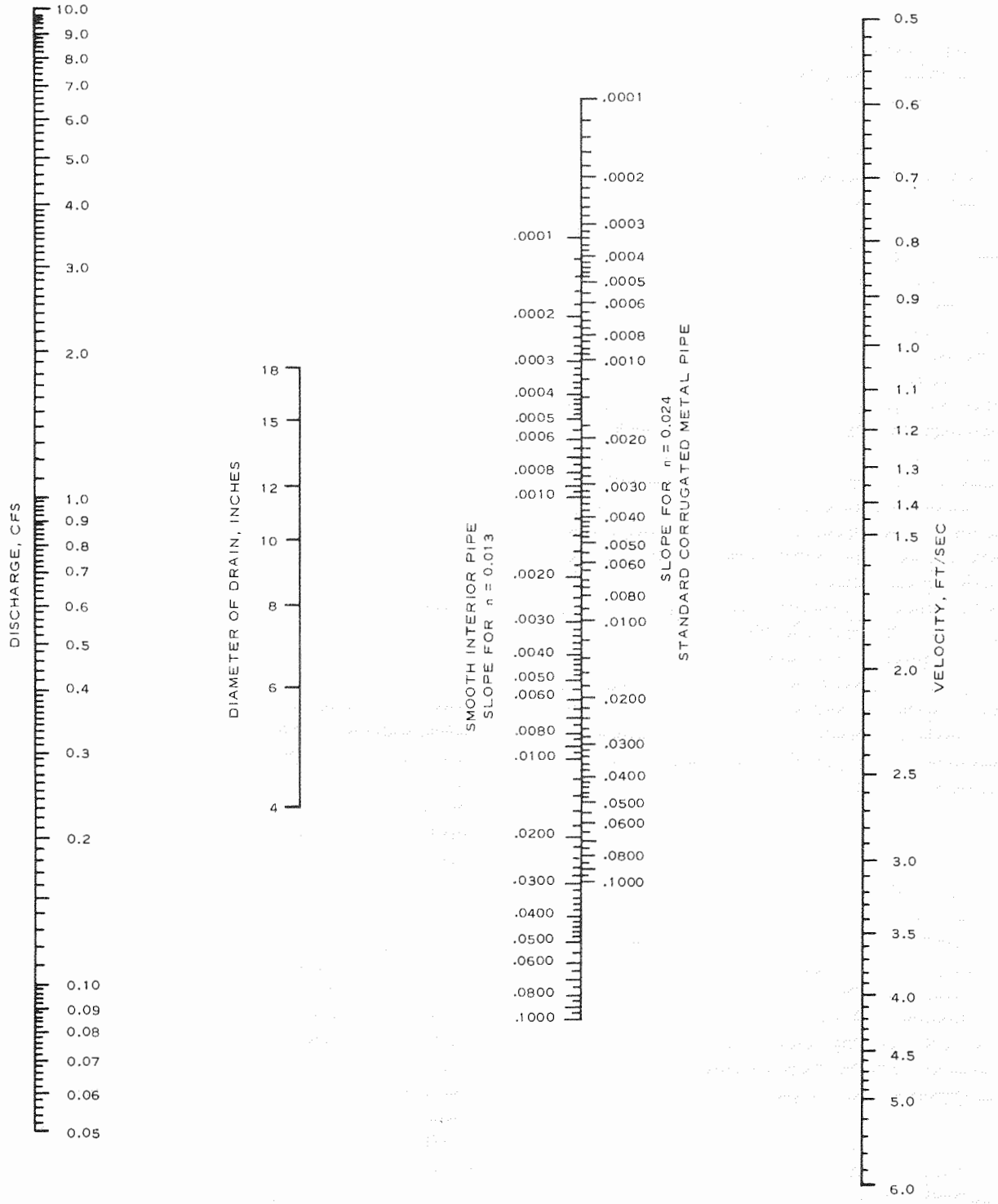


AIRFIELD DRAINAGE NOMOGRAPH
FOR COMPUTING REQUIRED SIZE OF
CIRCULAR DRAIN, FLOWING FULL
n = 0.013 AND n = 0.024

*Figure 15. Nomograph for airfield drainage (from U.S. Army 1979).*

| *Type of pipe* | n |
|---|---|
| Clay, concrete, bituminized fiber and asbestos–cement pipe | 0.013 |
| Bituminous-coated or uncoated corrugated metal pipe | 0.124 |

The recommended minimum slope for subdrain pipes is 0.15 ft in 100 ft (U.S. Army 1979).

Moulton (1980) indicates the pipe diameter should be 4 in. for a pipe slope greater than 0.004 and 6 in. for a slope between 0.002 and 0.004. AASHTO (1986b) specifies a pipe size of 6 to 12 in.

To check the capacity of standard sized drains, the Manning equation for flow in an open channel and other appropriate fluid flow equations may be used. Consideration of the appropriate roughness factors for the pipe material specified should be given.

Geocomposite drains are placed similarly to conventional trench drains, up against the edge of the pavement lane, under the shoulder (Fig. 16). The University of Illinois and others have done research on the flow capacities and performance of these drainage composites (Dempsey 1987). The fin-drain, as many geocomposites are called owing to their geometry, will perform as well as or better than more traditional pipe and trench methods if properly specified and placed.

The collector drain pipe should have a minimum grade of 1% for smooth pipe and 2% for corrugated pipe. Collector pipes should be a minimum of 4 in. in diameter. In areas of large groundwater flow, a 6-in.-diameter pipe should be used (Nichols 1987).

*Depth of cover over drainage pipe*

Depth of cover over drain pipes depends on loading and frost requirements. Two types of loads are of principal concern—dead loads consisting of the weight of the trench backfill and pavement, plus stationary surface loads, and live or moving loads, including the impact loading of vehicles or aircraft. Live loads are more important the shallower the pipe is buried. Cover requirements for different design aircraft wheel loads mandated by the Corps (U.S. Army 1978) are not included here.

In seasonal frost areas, the depth of cover to the center line of pipe shouldn't be less than the depth of frost penetration as determined by the Corps procedure (U.S. Army 1978). The trench for subdrains in seasonal frost areas should be backfilled with free-draining, non-frost-susceptible material. Within the depth of frost penetration, gradual transitions should be provided between non-frost-susceptible trench backfill and frost-susceptible subgrade materials around drains placed beneath pavements. This will prevent detrimental differential frost heave, particularly if the design is based on reduced subgrade strength.

*Drain trench geometry*

AASHTO (1986b) dictates that the drainage trench be 1.5 ft wide with a minimum of 2 in. of bedding under the drain pipe. The depth of the pipe will be 2 to 5 ft into the subgrade.

The geometry of the drainage trench recommended by the FHWA (Moulton 1980) is 1.5 ft wide with a minimum of 3 in. of bedding under the drain pipe. Typically, a drain is placed with the top of the pipe almost even with the bottom of the base course, as shown in Figure 17. The FHWA specifies only that the drain be placed within the subgrade in frost areas (Fig. 18).

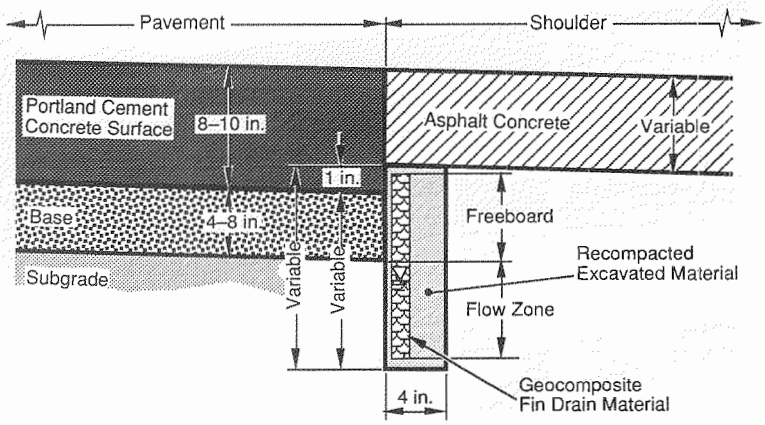


*Figure 16. Geocomposite fin drain (after Dempsey 1987).*

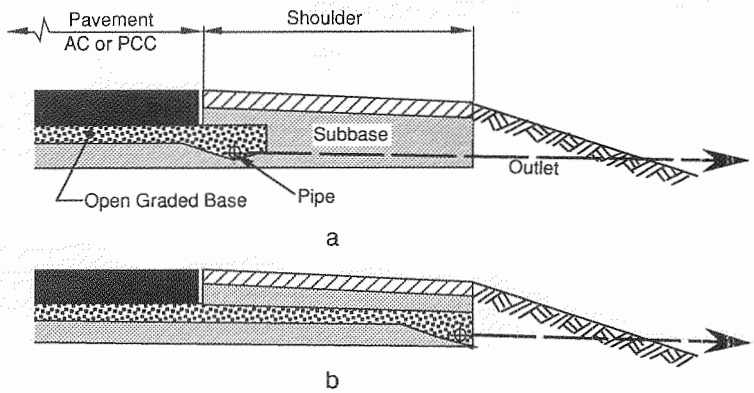


*Figure 17. FHWA shallow drains (after Moulton 1980).*

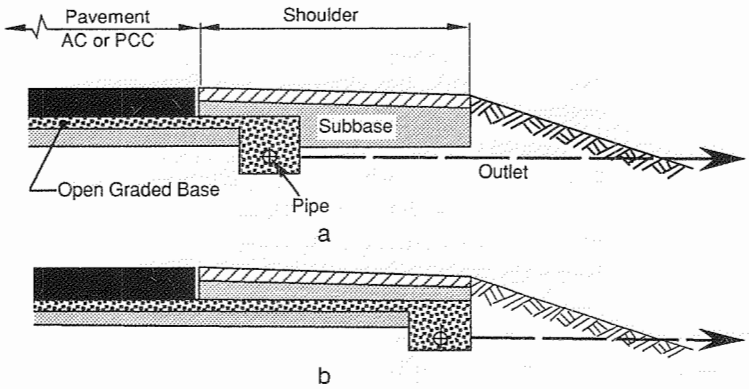


*Figure 18. FHWA deep drains (after Moulton 1980).*

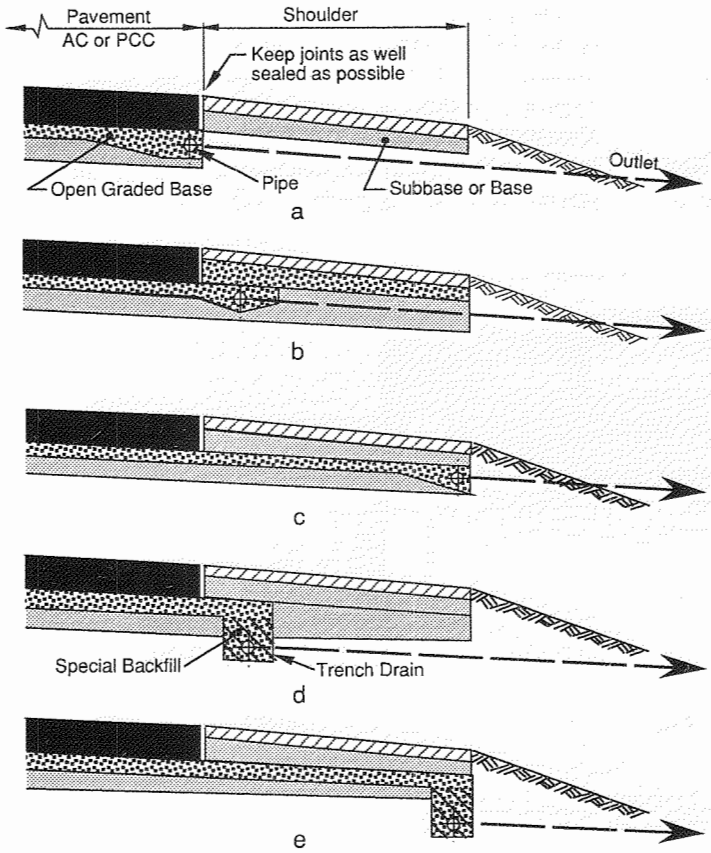


*Figure 19. Typical base course and drain configurations (after AASHTO 1986b).*

The New Jersey DOT (Kozlov 1984) advocates 3 in. of bedding beneath the pipe, and a depth to pipe of 12 in. from the bottom of the pipe to the top of the subgrade or, in frost areas, at least 12 in. from the bottom of the pipe to the frost line. Nichols (1987) advocates a deep trench when frost may penetrate and freeze the water in a shallow trench. Some additional standard drainage geometries from several sources are shown in Figures 19 and 20.

**Manholes, observation basins, outlets and risers**

Outlets for the collector pipe provide a way to convey the water away from the pavement into the surface drainage system, and can also be used to maintain the pipe. The location of the outlets will be somewhat affected by topographic and geometric features and the overall drainage pattern. The maximum spacing for outlets, however, has been cited by several agencies as approximately 500 ft (Kozlov 1984).

Drainage outlets should be designed in such a way as to keep out small rodents, prevent erosion around the outlet and allow for mowing, either by flagging the outlet so it can be avoided (most typical), or constructing it in such a way that a mower could run over it without causing the outlet or the mower damage. The use of protective headwalls, made of steel, concrete or some other durable material, to protect the outlet pipe is typically recommended. Where outlet pipes aren't subject to backwater or flooding, grates or heavy screen should be placed at the outlet to prevent vandalism or inhabitation by rodents. However, if debris is washed through the pipe, it may be caught in the screen, and will plug the outflow. If an outlet is subjected to flooding, a check or flap valve should be used to prevent back-flow (U.S. Army 1978).

Manholes, observation basins and risers are installed on subsurface drainage systems to provide access to the buried pipe to observe its operation and to flush or rod the pipe for cleaning. Manholes on base and subbase course or subgrade pipe drains should be at intervals of not over 1000 ft, with one flushing riser located between manholes and at dead ends. Manholes should be provided at principle intersections of several drains.

Risers are typically vertical pieces of pipe with either a constructed angle or a piece of flexible pipe attached to the horizontal drain pipe (Fig. 21). The attachment is made so that an inserted cleaning device (i.e., a sewer rodder) would be guided downstream. They should be placed at intervals within the pipe that allow the cleaning device to extend from one riser to the next, typically 200–250 ft. Each riser is capped to stop debris from entering the system

The Corps specifies (U.S. Army 1978) details on drainage fixtures. Inlets and box drains are specified, as

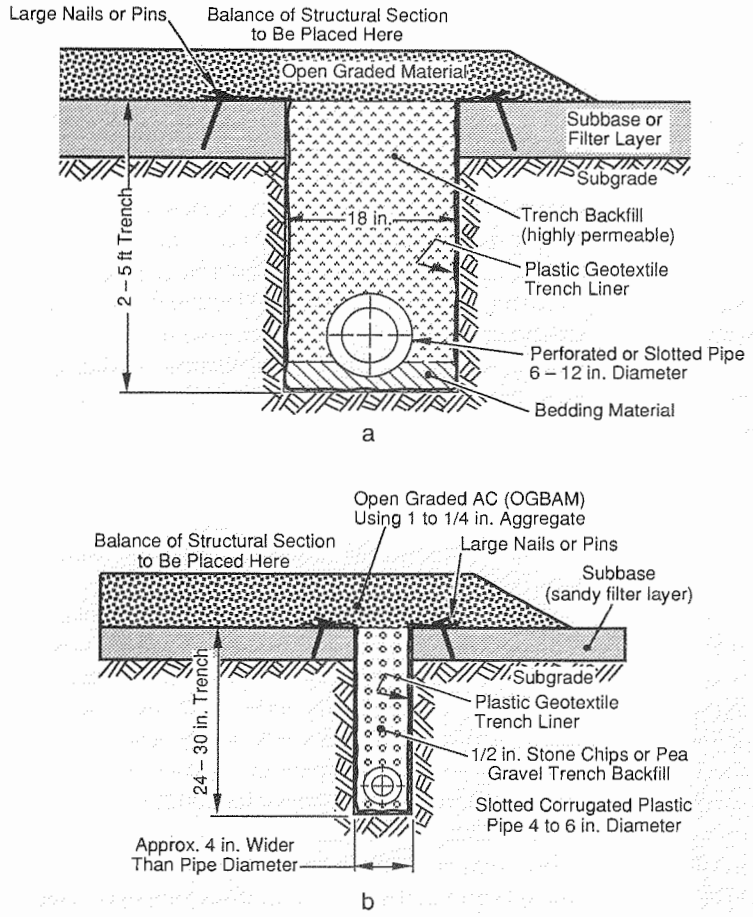


*Figure 20. Typical drain trench details (after AASHTO 1986b).*

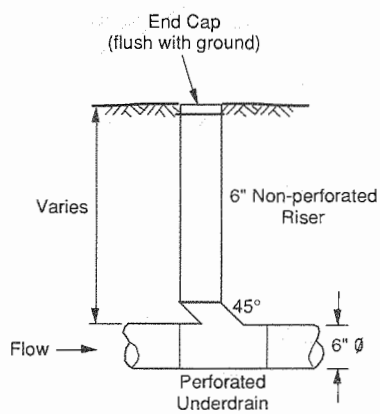


*Figure 21. Typical riser.*

well as criteria for headwalls, drop structures, check dams, chutes, stilling basins, gutters, open channels, erosion control and riprap protection. Drainage during construction is also given a short discussion. These subjects will not be discussed further in this report.

**Retrofit edge drains**

Where pavements were not built with drainage and have begun to show moisture-related distress, it is becoming more common to retrofit the pavement with an edge drain to try to alleviate the problem.

The experience with retrofit edge drains varies. New Jersey DOT (Kozlov et al. 1982) reports that pumping action under Portland cement concrete pavements was only partially arrested by the retrofit of edge drains, and that eventually the under drains became clogged with pumped fines.

Hallin (1988) reports that retrofitting edge drains on concrete pavements with erodible bases having a high percentage of fines, such as typical dense-graded bases, may not be an effective rehabilitation technique. Several states have reported that when edge drains were added to pavements where the base had a high percentage of material passing the no. 200 sieve, edge drains may actually accelerate distress. The edge drains are believed to permit fines to erode from the base, creating voids beneath the pavement. When filter fabrics are included in these systems, the fabric become clogged and the drains cease to function.

**Construction**

*Base and subbase*

Placement of the rapid-draining and open-graded mixes is relatively new and requires following certain guidelines. The material must be placed in such a way to prevent or minimize segregation and obtain a uniform layer thickness. The rapid-draining material requires extra care in stockpiling and handling.

The Corps permeable Open-Graded and Rapid-Draining Mixes (OGM and RDM) may be best placed with an asphalt paver (U.S. Army 1988). To ensure proper compaction, lift thickness should be kept at 6 in. or less. If choke stone is used on the open-graded mix, it should be placed after compaction of the final lift. The choke stone is spread in a thin lift not more the 1.2 in. thick using a spreader or the paver, and worked into the surface of the OGM with a vibratory roller and wetting.

To determine the compaction effort required for the OGM and RDM aggregates, a test section is recommended (U.S. Army 1988). The test section should be closely monitored to determine when crushing of the aggregate becomes excessive. Experience has shown that sufficient compaction can be obtained with six passes or less of a 10-ton vibratory roller. Unstabilized

material should be kept moist during compaction. Asphalt-stabilized material must be compacted at a somewhat lower temperature than standard dense-graded mixes. In most cases it will be necessary to allow the mix to cool to less that 200°F before compaction (U.S. Army 1988). West Virginia allows asphalt stabilized materials to cool to approximately 130 to 150°F before compaction is attempted (Baldwin and Long 1987).

After compaction, the drainage layer should be protected from contamination by fines from the construction traffic. It is recommended that the surface layer be placed as soon as possible after placement of the drainage layer. Precautions must be taken to protect the drainage layer from disturbance by the equipment placing the surface layer. Only tracked pavers should be allowed for paving on unstabilized base courses. Truck drivers should avoid rapid acceleration, hard braking and sharp turns on the completed drainage layer.

*Filter material*

The major difficulties in construction of the filter are the problem with compaction in a restricted working space and the tendency toward segregation of particles (U.S. Army 1979). Segregation of coarse particles results in the formation of voids through which fine particles may wash from the subgrade material. A material with a high coefficient of uniformity will tend to segregate during placement; therefore, a coefficient of uniformity less than 20 is recommended. For the same reason, filter materials should not be skip graded. Segregation can best be prevented by placement of moist material. However, moist placement of sand may cause bulking of the sand particles. The use of water during installation of the filter material will collapse the structure of the bulked sand, therefore aiding in compaction and forming satisfactory transition zones between the various materials.

Kozlov (1984) reports that the best method for building underdrains in roadways is first to construct all subbases. If required, the top of the subbase is then stabilized and the filter cloth barrier is placed to provide a construction platform and to prevent the intrusion of subbase fines into the overlying drainage layer. This is followed by the construction of the collection system. Finally the drainage system is placed.

## COLD REGIONS CONSIDERATIONS

Preventing damage to pavements in cold regions is of particular concern because of the action of freeze–thaw cycling. If a pavement does not drain well, frost-susceptible soils will be more likely to heave because of the water retained within the structure. In the spring, water resulting from melting ice lenses will cause thaw weakening of the pavement structure, making it more prone to damage by traffic loads. In some areas this behavior results in roads being closed to heavy truck traffic during the spring thaw season to prevent damage.

During warm days plowed granular shoulders and the base under the asphalt surface may thaw slightly because of their dark surfaces. As they thaw, more water can penetrate into the pavement. The area adjacent to the pavement, under the insulating effects of the snow bank, will remain frozen, as will deeper areas of the structure, forming a bathtub for the thawed material. If, during the night, the pavement refreezes, heaving will occur. Repeated freeze–thaw cycles in the late winter and early spring over-stress the asphalt and cause longitudinal cracking to develop at the pavement edge. In time these cracks propagate and may eventually cause pavement breakup, especially in thin asphalt pavements (MacMaster et al. 1982).

Several issues arise when designing pavement drainage systems to be installed in cold regions. Previously, the gradations and filter requirements for base courses of pavement in seasonal frost areas were discussed. The following discussion deals with some additional concerns, such as 1) the influence of depth of frost penetrations, 2) differential pavement icing and 3) frost heave of drainage fixtures and pipes.

In a study by CRREL for the state of New Jersey, the data indicated that pavement profiles with open-graded base courses had frost penetration equal to or slightly less than that beneath similar pavement profiles without drainage layers. The stabilization of the open-graded material has no influence on the depth of frost penetration within the pavement (Berg 1978).

Another consideration voiced is whether or not the low conductivities of the open-graded drainage layers, as compared to the thermal conductivities of conventional base and subbase material, will cause the pavement surface over an open-graded drainage layer to become icy before the pavement without a drainage layer does. Owing to the small nature of the difference between the thermal conductivity between open-graded layer material (0.54 Btu/ft hr °F) and the base and subbase course materials used in the particular study investigated (about 1.1 Btu/ft hr °F), no significant difference in surface conditions between the two pavements is anticipated (Berg and McGaw 1978). However, no data have been collected to support this conclusion, to the author's knowledge.

Drains, culverts and other utilities are frequently sites of severe differential heaving of pavement surfaces. Differential frost heave may result in both fatigue of the pavement, which may lead to cracking, and unacceptable roughness of the pavement surface. Also, heaving

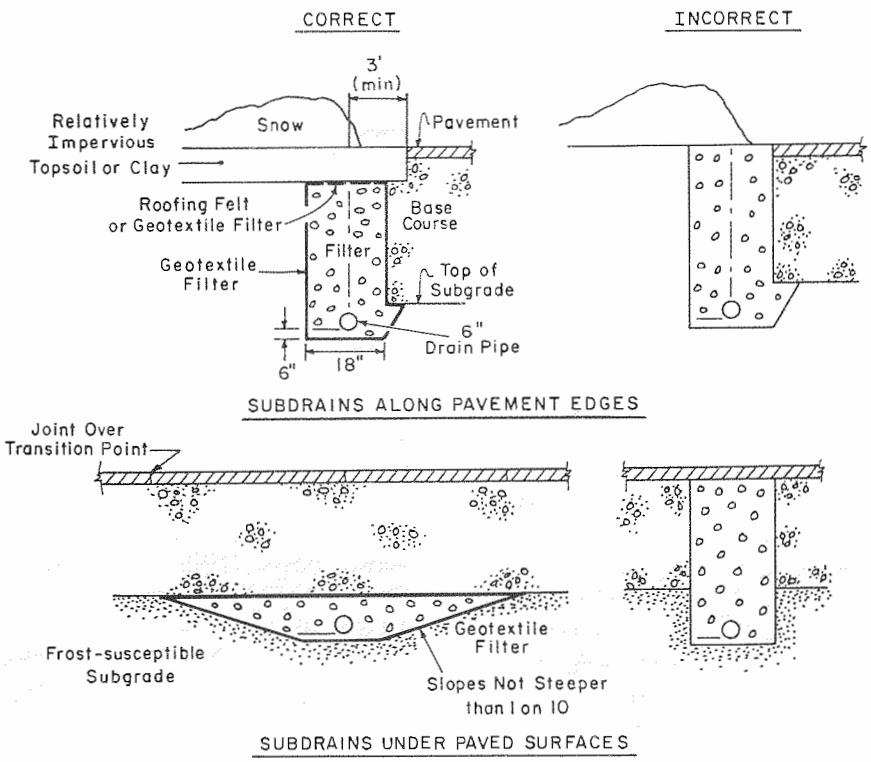


*Figure 22. Subdrains for cold regions (from U.S. Army 1985).*

of the pipe may cause it to break or become misaligned. Detrimental effects of heaving of frost-susceptible soils around and under drainage pipes are a principal consideration in the design of drainage systems in seasonal frost areas. The freezing of water within the system, with the exception of icing of the inlets, is of secondary consideration, provided the hydraulic design assures minimum velocity of flow. The Corps (U.S. Army 1979) provides guidance on the control of differential frost heave at drainage structures such as inlets and culverts.

The Corps (U.S. Army 1978) recommends that the placement of drains under the pavement should be avoided, if possible, and where the pipes must be placed under the pavement, wide trenches that provide transitions should be used and the pipes placed before placement of the base course. Methods for placement of base and subbase drain pipes and pipes that must be placed beneath paved surfaces in cold regions are shown in Figure 22. Excavating into an existing pavement and base course for placement of drains is not recommended because placing backfill in the excavation to recreate the same frost heave characteristics as the adjacent pavement is nearly impossible.

The Corps (U.S. Army 1981) provides specifications for storm drainage systems in permafrost and other arctic and subarctic regions, which are defined as having temperatures in their coldest month below 32°F, the mean temperature for the warmest month above 50°F and in which there are less than 4 months having a mean temperature above 50°F.

## CONCLUSIONS

The criteria produced by the Corps of Engineers for drainage of pavement structures and the practices of those outside the Corps do not vary greatly. This is principally because of the Corps guidance being produced by WES that requires the use of the rapid-draining and open-graded materials. Also, much of the work done for the Corps, or incorporated into the Corps literature, has been disseminated into the mainstream work by the authors of the Corps work themselves, or by others. For years the Corps has either had in their employ or contracted with people who are the leaders in their fields, and many of these are the staunchest advocates of drained pavements.

For designing drainage systems for cold regions, Corps and other criteria are both somewhat lacking. A prediction of the drainage capacity needed to provide for snowmelt, especially on roads and small runways where the snowbanks and the geometry of the section may conspire to allow for a continuous flow of meltwater across the pavement surface (i.e., super-elevated curves)

is not present in the Corps criteria. In the outside sector, Texas A&M and some others have begun to incorporate snowmelt into their required capacities. While a qualitative discussion of the effects of temperature, degree of compaction, albedo and rainfall on the melt rate of snow banks can be produced, there is, however, no model that realistically quantifies the amount of water available for infiltration into a pavement system from snowmelt.

For cold regions engineering, everywhere in the drainage literature that the potential for damage to and by the mower is mentioned, the word snowplow should be inserted during the winter months. Flagging may have limited use when weather conditions obscure the view of the plow operators, and therefore all drainage fixtures should be flush with the ground surface. If the material around the drain is going to tend to heave, the fixtures may need to be below the ground surface.

If a fixture such as a riser or outlet is going to have a removable cap or a grate, a connection of some type should be made to tie the cap to the pipe, so that if it gets knocked off it can be replaced. Or the maintenance truck should be supplied with extra caps to replace lost ones.

In one issue the Corps has made a point that is seldom seen in drainage designs from other agencies, except by chance. The use of broad, sloping trenches for pipes under paved surfaces is necessary to prevent differential frost heave in the section. The Corps also has designs for catch basins and other structures to mitigate differential frost heave.

In all sectors, from the Corps through the rest of the pavement community, the principles of good drainage are well known. The high cost of permeable aggregates, and the extra care needed to place drainable bases and collectors, are the main factors that prevent the regular construction of well-draining pavements.

## LITERATURE CITED


**American Association for Testing and Materials (ASTM)** (1987) *Annual Book of ASTM Standards*. Section 04, Volume 04.02, D 448-86, *Classification for Standard Sizes of Aggregate and Bridge Construction*. Philadelphia.

**American Association of State Highway and Transportation Officials** (1986a) *AASHTO Guide for Design of Pavement Structures*, Volume 1.

**American Association of State Highway and Transportation Officials** (1986b) *AASHTO Guide for Design of Pavement Structures*, Volume 2.

**American Concrete Paving Association** (1989) Drain it? Dowel it? Seal it? *ACPA Journal*, **25**(2).

**Baldwin, J. and D. Long** (1987) Design, construction and evaluation of West Virginia's first free draining pavement system. Preprint, Transportation Research Board 67th Annual Meeting. Washington, D.C.: Transportation Research Board, National Academy of Sciences.

**Barenberg, E. and S. Tayabji** (1974) Evaluation of typical pavement drainage systems using open-graded bituminous aggregate mixture drainage layers. UILU-EHG-74-2009, Illinois Department of Transportation, University of Illinois.

**Baumgardner, R. and D. Mathis** (1989) Experimental Project No. 12, concrete pavement drainage rehabilitation. State of the Practice Report, U.S. Department of Transportation.

**Berg, R. and R. McGaw** (1978) Improved drainage and frost action criteria for New Jersey pavement design, Phase 2: Frost action. USA Cold Regions Research and Engineering Laboratory, Special Report 78-9.

**Better Roads** (1990) TIC drains protect road base. *Better Roads*, **60**(4), April.

**Cedergren, H.** (1974) *Drainage of Highway and Airfield Pavements*. New York: John Wiley & Sons.

**Cedergren, H.** (1977) *Seepage, Drainage, and Flow Nets*. Second Edition. New York: John Wiley & Sons.

**Cedergren, H.R., J.A. Arman and K.H. O'Brien** (1973) Development of guidelines for the design of subsurface drainage systems for highway pavement structural sections. *Guidelines for Design*, FHWA-RD-73-14. Washington, D.C.: Federal Highway Administration.

**Dempsey, B.J.** (1982) Laboratory and field studies of channeling and pumping. Transportation Research Record 849. Washington, D.C.: Transportation Research Board, National Academy of Sciences,

**Dempsey, B.J.** (1987) Core flow capacity requirements of geocomposite fin-drain materials utilized in pavement subdrainage. Prepared for Transportation Research Board, 1988 Annual Meeting. Washington, D.C.: Transportation Research Board, National Academy of Sciences.

**Dempsey, B. J. and Q.L. Robnett** (1979) Influence of precipitation, joints, and sealing on pavement drainage. Transportation Research Record 705. Washington, D.C.: Transportation Research Board, National Academy of Sciences.

**Forsyth, R., G. Wells, J. Woodstrom** (1987) The economic impact of pavement subsurface drainage. Washington, D.C.: Transportation Research Board, National Academy of Sciences.

**Hallin, J.P.** (1988) Edge drains oust excess moisture. *Roads and Bridges*, March.

**Highlands, K. and G. Hoffman** (1987) Subbase permeability and pavement performance, Preprint, Transportation Research Board 67th Annual Meeting. Washington, D.C.: Transportation Research Board, National Academy of Sciences.

**Kozlov, G.** (1984) Implementation of internal drainage design and application. Transportation Research Record 993. Washington, D.C.: Transportation Research Board, National Academy of Sciences.

**Kozlov, G., V. Mottola and G. Mehalchick** (1982) Investigations for subsurface drainage design. FHWA-NJ-7740. Trenton: New Jersey Department of Transportation.

**Lytton, R.L., D.E. Pufahl, C.H. Michalak, H.S. Liang, and B.J. Dempsey** (1990) An integrated model of the climatic effects on pavements. FHWA, Texas Transportation Institute, Texas A&M University.

**MacMaster, J.B., G.A. Wrong and W.A. Phang** (1982) Pavement drainage in seasonal frost area, Ontario. Transportation Research Record 849. Washington, D.C.: Transportation Research Board, National Academy of Sciences.

**Markow, M.** (1982) Simulating pavement performance under various moisture conditions. Transportation Research Record 849. Washington, D.C.: Transportation Research Board, National Academy of Sciences.

**Moulton, L.** (1980) Highway subdrainage design. Report No. FHWA-TS-80-224. Washington, D.C.: Federal Highway Administration.

**Nichols, R.** (1987) Highway drainage. CLRP Report No. 87-2. Ithaca, New York: Cornell University Local Roads Program.

**Perry, E.B.** (1975) Piping in earth dams constructed of dispersive clay: Literature review and design of laboratory tests. Vicksburg, Mississippi: U.S. Army Waterways Experiment Station, Technical Report S-75-15.

**Ridgeway, H.** (1976) Infiltration of water through the pavement surface. Transportation Research Record 616. Washington, D.C.: Transportation Research Board, National Academy of Sciences.

**Ridgeway, H.** (1982) Pavement subsurface drainage systems, NCHRP. Synthesis of Highway Practice Report 96. Washington, D.C.: Transportation Research Board, National Academy of Sciences.

**Smith, T.W., H.R. Cedergren and C.A. Reyner** (1964) Permeable materials for highway drainage. Highway Research Record No. 68. Washington, D.C.: Highway Research Board, National Academy of Sciences.

**U.S. Army** (1977) Surface drainage facilities for airfields and heliports. Technical Manual TM 5-820-1.

**U.S. Army** (1978) Drainage and erosion-control structures for airfields and heliports. Technical Manual TM 5-820-3.

**U.S. Army** (1979) Drainage and erosion control subsurface drainage facilities for airfield pavements. Technical Manual TM 5-820-2.

**U.S. Army** (1981) Surface drainage design for airfields and heliports in arctic and subarctic regions. Technical Manual TM 5-852-7.

**U.S. Army** (1983) Graded crushed aggregate base course. Corps of Engineers Guide Specification Mobilization Construction MOGS 02233.

**U.S. Army** (1985) Pavement design for seasonal frost conditions. Technical Manual TM 5-818-2.

**U.S. Army** (1988) Rapid draining base courses for pavements. Engineer Technical Letter 1110-3-381.

**U.S. Army** (1989a) Subdrainage drainage system. Corps of Engineers Guide Specification for Military Construction CEGS 02710.

**U.S. Army** (1989b) Storm drainage system. Corps of Engineers Guide Specification for Military Construction CEGS 02720.

## BIBLIOGRAPHY

**Cedergren, H.R., J.A. Arman and K.H. O'Brien** (1972) Development of guidelines for the design of subsurface drainage systems for highway pavement structural sections. *Guidelines for Design—Final Report*, FHWA-RD-72-30. Washington, D.C.: Federal Highway Administration.

**Federal Aviation Administration** (no date) Airport drainage. Draft Advisory Circular, 150/5320-5C.

**Hoffman, G.** (1982) Subbase permeability and pavement performance. Transportation Research Record 849. Washington, D.C.: Transportation Research Board, National Academy of Sciences.

**Liang, Hui Sheng and R. Lytton** (1989) Rainfall estimation for pavement analysis and design. Preprint, Transportation Research Board 68th Annual Meeting. Washington, D.C.: Transportation Research Board, National Academy of Sciences.

**Liu, Shang and R. Lytton** (1985) Environmental effects of pavements, Volume 4. Drainage manual. FHWA/RD-84/116. Texas Transportation Institute, Texas A&M University.

**U.S. Army** (1983) Drainage for areas other than airfields. Technical Manual TM 5-820-4.



☆ U. S. GOVERNMENT PRINTING OFFICE: 1992--600-063--42045