DOT/FAA/TC-12/15

Federal Aviation Administration
William J. Hughes Technical Center
Aviation Research Division
Atlantic City International Airport
New Jersey 08405

General Aviation Accident Prevention—Basic Envelope Protection

Phase II: Simulator Design, Envelope Protection Algorithms, and Initial Simulator Findings

October 2012

Final Report

This document is available to the U.S. public through the National Technical Information Services (NTIS), Springfield, Virginia 22161.

This document is also available from the Federal Aviation Administration William J. Hughes Technical Center at actlibrary.tc.faa.gov.

U.S. Department of Transportation
Federal Aviation Administration

NOTICE

This document is disseminated under the sponsorship of the U.S. Department of Transportation in the interest of information exchange. The U.S. Government assumes no liability for the contents or use thereof. The U.S. Government does not endorse products or manufacturers. Trade or manufacturer's names appear herein solely because they are considered essential to the objective of this report. The findings and conclusions in this report are those of the author(s) and do not necessarily represent the views of the funding agency. This document does not constitute FAA policy. Consult the FAA sponsoring organization listed on the Technical Documentation page as to its use.

This report is available at the Federal Aviation Administration William J. Hughes Technical Center's Full-Text Technical Reports page: actlibrary.tc.faa.gov in Adobe Acrobat portable document format (PDF).

Technical Report Documentation Page

1. Report No.	2. Government Accession No.	3. Recipient's Catalog No.
DOT/FAA/TC-12/15		

4. Title and Subtitle	5. Report Date
GENERAL AVIATION ACCIDENT PREVENTION—BASIC ENVELOPE PROTECTION PHASE II: SIMULATOR DESIGN, ENVELOPE PROTECTION ALGORITHMS, AND INITIAL SIMULATOR FINDINGS	October 2012
	6. Performing Organization Code
7. Author(s)	8. Performing Organization Report No.
John Wilson and Mark Peters	
9. Performing Organization Name and Address	10. Work Unit No. (TRAIS)
Sensis Corporation Seagull Technology Center 1700 Dell Avenue Campbell, CA 95008	
	11. Contract or Grant No.
12. Sponsoring Agency Name and Address	13. Type of Report and Period Covered
U.S. Department of Transportation Federal Aviation Administration Central Region – Small Airplane Directorate 907 Locust Street Kansas City, MO 64106	Final Report
	14. Sponsoring Agency Code ACE-110

15. Supplementary Notes

The Federal Aviation Administration William J. Hughes Technical Center Aviation Research Division COR was Robert McGuire.

16. Abstract

This document describes the second phase of a Federal Aviation Administration-funded project to define and develop flight envelope protection (EvP) concepts and systems for light general aviation (GA) aircraft.

This report documents the development and initial use of a high-fidelity pilot-in-the-loop flight simulation of a Cessna 182 light aircraft.

A high-fidelity Cessna 182 simulator was built to explore full-time stability augmentation and EvP for light GA aircraft. This simulator includes an actual salvage Cessna 182 fuselage cab including original primary flight controls. Realistic control yoke forces were provided during all phases of flight. This facility has been used to show that full-time stability augmentation and EvP can be implemented without it resulting in objectionable changes to manual control of the aircraft. Force contributions from high-bandwidth, force-limited servos are limited so that they are essentially transparent to the pilot manually manipulating the controls during normal maneuvering. When the aircraft approaches the edges of the normal flight envelope, EvP features automatically engage to push the aircraft away from a hazardous flight condition. The simulation facility has enabled the development and clarification of a number of general design principles that are applicable to any stability augmentation or EvP system for light GA aircraft.

17. Key Words	18. Distribution Statement
Flight control, Autopilot, Envelope protection, Stability augmentation, General aviation, Light aircraft, Force gradient control	This document is available to the U.S. public through the National Technical Information Service (NTIS), Springfield, Virginia 22161. This document is also available from the Federal Aviation Administration William J. Hughes Technical Center at actlibrary.tc.faa.gov.

19. Security Classif. (of this report)	20. Security Classif. (of this page)	21. No. of Pages	22. Price
Unclassified	Unclassified	39	

Form DOT F 1700.7 (8-72) Reproduction of completed page authorized

TABLE OF CONTENTS

			Page
EXECUTIVE SUMMARY			ix
1.	INTRODUCTION		1
2.	SIMULATOR DEVELOPMENT		2
	2.1	Rationale	3
	2.2	Fuselage Cab	4
	2.3	Flight Controls	6
	2.4	Hardware Architecture	7
	2.5	Control Loaders	9
	2.6	Flight Displays	11
3.	FEEDBACK ALGORITHMS		15
	3.1	Lateral AP	16
		3.1.1 Wing Leveler	16
		3.1.2 Heading Capture	17
	3.2	Longitudinal AP	18
		3.2.1 The VS Mode	18
		3.2.2 The FLCH Mode	18
		3.2.3 Altitude Hold and Capture	19
		3.2.4 Control Surface Deflections	20
	3.3	Lateral Stability Augmentation	21
	3.4	Longitudinal Stability Augmentation	22
	3.5	Lateral EvP	23
	3.6	Longitudinal EvP	24
		3.6.1 Stall	25
		3.6.2 Overpitch	25
		3.6.3 Overspeed	26
		3.6.4 Mode Switching	27
4.	SUMMARY OF LESSONS LEARNED		27
	4.1	General Feasibility of Full-Time Stability Augmentation and EvP	27
	4.2	Tactile Characteristics of Control	28
	4.3	Mode Clarity	28

4.4 Pilot Override of Features 29
4.5 Methodology for Evaluation of Candidate Systems 29

5. FUTURE DIRECTIONS 29

6. REFERENCES 30

LIST OF FIGURES

Figure		Page
1	Functioning Cessna 182 Simulator	2
2	Cessna 182 Simulator Instrument Panel	3
3	Salvage Cessna 182 Cab	4
4	Original Cab Panel	4
5	Cab Interior	5
6	Metal Flat Panel	5
7	Simulator Cockpit and all Functioning Aircraft Controls	6
8	Diagram of the Hardware Architecture	7
9	Hardware in Rear of Cab Supporting the Simulation	8
10	Solid Model Isometric View of Roll and Pitch Control Loader Actuators on Firewall	9
11	Solid Model Front View of Roll and Pitch Control Loader Actuators on Firewall	10
12	Solid Model Side View of Roll and Pitch Control Loader Actuators on Firewall	10
13	Completed Control Loader Apparatus	11
14	Primary Flight Instruments	12
15	Secondary Flight Instruments	13
16	The AP CDU	14
17	Lateral Wing Leveler	17
18	Heading Control	17
19	The VS Controller	18
20	Speed Capture for FLCH Mode	19
21	Altitude Hold and Capture	20
22	Controller for Commanding Control Surface Deflections	21
23	Bank Angle Stability Augmentation	22
24	Longitudinal Stability Augmentation	23
25	Bank Angle Envelope Control	24
26	Stall Prevention	25
27	Overpitch EvP	26
28	Overspeed EvP	26

LIST OF SYMBOLS AND ACRONYMS

ϕ	Roll angle
ϕ_c	Commanded Roll Angle
e	General error
e_h	Error in altitude
$e_{\dot{h}}$	Error in altitude rate (vertical speed)
k_i	Integrator gain
k_p	Proportional gain
δ_{ail}	Aileron deflection
δ_{ail_e}	Commanded aileron deflection
x	State vector (in this case for the aircraft dynamics)
$\dot{x}$	State vector derivative
u	Input vector
y	Output vector
Act	Actuator Dynamics
A	The state matrix for state space representation of a dynamic system
B	The input matrix for state space representation of a dynamic system
C	The output matrix for state space representation of a dynamic system
ψ	Heading
$\dot{\psi}$	Heading (turn) rate
$\dot{\psi}_c$	Commanded turn rate
$K_{\dot{\psi}}$	Turn rate gain
h	Altitude
h_c	Commanded altitude
$\dot{h}$	Altitude rate (vertical speed)
$\dot{h}_c$	Commanded altitude rate
δ_e	Elevator deflection
δ_{e_c}	Commanded Elevator Deflection
k_b	Feedback gain used for stabilization
V_{IAS}	Indicated airspeed
V_{IAS_c}	Commanded indicated airspeed
k_d	Derivative gain
K_h	Altitude rate gain
k_i	Integrator gain
k_p	Proportional gain
$F_{\delta_{ail}}$	Force applied to the aileron
F_{δ_e}	Force applied to the elevator
θ	Pitch angle

θ_c	Commanded pitch angle
α	Angle of attack
α_c	Commanded angle of attack
K_θ	Pitch gain
n_z	Z axis accelerations (g-loads)
n_{z_c}	Commanded Z axis accelerations
V_{IAS}	Indicated airspeed gain
s	Laplace parameter ($\sigma+i\omega$)
ALT	Altitude
AoA	Angle of Attack
AP	Autopilot
CDU	Control display unit
CFR	Code of Federal Regulations
EV	Envelope
EvP	Envelope protection
FLCH	Flight level change
g	Flight load
GA	General aviation
HDG	Heading
LVL	Level
STB	Stability
VS	Vertical speed

EXECUTIVE SUMMARY

This document describes the second phase of a Federal Aviation Administration-funded project to define and develop flight envelope protection (EvP) concepts and systems for light general aviation (GA) aircraft.

This report documents the development and initial use of a high-fidelity pilot-in-the-loop flight simulation of a Cessna 182 light aircraft. This simulator includes realistic cockpit controls and implements accurate control yoke forces for all phases of flight. It has been used to develop feedback control algorithms for full-time aircraft stability augmentation and flight EvP appropriate to small GA aircraft.

From initial experiments in the simulator, it is evident that full-time stability augmentation and EvP can be designed so that there are no objectionable changes to the feel of the primary flight controls. The force contributions from the high-bandwidth, force-limited servos are programmed to be essentially transparent to the pilot manually manipulating the controls during normal maneuvering. When the pilot removes his hands from the controls, he may notice a tendency for the aircraft to return to straight and level flight. During operation at the edges of the normal flight envelope, when EvP features automatically engage, the pilot becomes aware of active control inputs from the feedback control system to push the aircraft away from a hazardous flight condition.

While the stability augmentation and flight EvP systems are intended to be nominally “on” by default, it is possible, for flight training purposes or other unusual operational reasons, for the pilot to selectively disengage these features, in much the same way as the traction control system in modern automobiles may be disengaged even though “on” by default.

The simulation facility has allowed the development and clarification of a number of general design principles that are applicable to any stability augmentation or EvP system for light GA aircraft. A number of these initial lessons learned are discussed in this report.

The next phase of the current work is planned to include validation of the simulator findings through flight test in a light aircraft.

1. INTRODUCTION.

This report discusses the second phase of a Federal Aviation Administration (FAA)-funded project to define and develop flight envelope protection (EvP) concepts and systems for light general aviation (GA) aircraft, which includes the design and construction of a Cessna 182 aircraft simulator with realistic flight controls and control loaders. This simulator was used to explore stability augmentation and EvP control and display concepts. A number of general design principles were elucidated using the simulator, and these initial findings are noted.

Although recently developed technologies for light GA aircraft have greatly benefited overall situational awareness, they do not explicitly address aircraft loss of control, which remains a significant contributor to fatal accidents. Loss of control may occur as a result of disorientation during low-speed operation in Instrument Meteorological Conditions, due to an uncoordinated stall and subsequent spin, or as a result of other conditions in flight. Loss-of-control accidents account for roughly 38% of all GA aircraft accidents, or about 100 accidents and 185 lives lost each year [1].

To reduce loss-of-control accidents, previous research programs have sought to simplify the task of flying the airplane through some form of advanced flight control. Several successful control systems have been developed and demonstrated in flight; however, so far these efforts have not achieved a comprehensive solution to loss of control that includes a clear roadmap to the certification and implementation of such systems [2]. Complete implementation of these solutions would likely require full fly-by-wire control, making hardware and certification costs impractical for light aircraft, which are typically controlled with cable and pulley actuation. Fly-by-wire would be especially ill-suited for retrofit into existing older aircraft, which constitute the vast majority of the GA fleet in the U.S.

There is a precedent for very limited forms of EvP in light aircraft. All Title 14 Code of Federal Regulations (CFR) Part 23 aircraft must have a stall warning (14 CFR 23.207), which is an advisory-only type of EvP. Stall barrier systems (stick pushers) that are implemented on certain high-performance aircraft are of even greater significance. These devices, covered under 14 CFR 23.691, are designed to provide a pitch motion that is equivalent to that experienced during stalls of airplanes that naturally meet the stall requirements. It is particularly significant that these artificial barrier devices are automatically activated when certain criteria are met and directly manipulate a flight control against the actions of the pilot. 14 CFR 23.691 even identifies the usage of the autopilot (AP) pitch servo as one means to accomplish this action. Therefore, there is a regulatory precedent for an AP system providing EvP for light GA aircraft.

During the first phase of this project, the concepts of stall warning and stick pusher systems were expanded by considering the capabilities afforded by modern microprocessor and solid-state sensor packages. Several concepts for light aircraft EvP were developed. At a minimal level of sophistication, more complete advisory-only systems can complement existing stall warning devices and make developing hazardous flight conditions more readily apparent to the pilot. At the higher end, sophisticated APs that have EvP built in as a standard feature are considered. The concept of force gradient control would enable full-time stability augmentation and EvP in cable-

controlled aircraft without resorting to fly-by-wire control design. By leveraging a more advanced type of AP servo capable of high-bandwidth, force-limited contributions to the overall control surface deflections still allow the pilot complete freedom to manipulate the controls at the same time.

This report documents the development and initial use of a dedicated flight simulation facility that was used to explore and develop feedback control algorithms suitable for force gradient control application to light GA aircraft to provide aircraft stability augmentation and flight EvP.

2. SIMULATOR DEVELOPMENT.

To test the feasibility of a full-time EvP system in a cable-controlled aircraft, a human-in-the-loop cockpit simulator of a Cessna 182 was constructed, as shown in figure 1.

Figure 1. Functioning Cessna 182 Simulator

The simulator is a refurbished, salvage Cessna 182 fuselage cab, which features

- electric control actuators to create realistic stick force gradients.
- a flat metal instrument panel with flat-panel displays.
- a 180° surround display outside the window.

Particular attention was given to the tactile elements associated with the stick force gradients of the aircraft. A photograph of the instrument panel is shown in figure 2.

Figure 2. Cessna 182 Simulator Instrument Panel

2.1 RATIONALE.

A ground simulator was determined to be the most efficient means of exploring the complex interactions of force gradient control, cockpit displays, and annunciations. By developing a simulator that accurately modeled aircraft dynamics, including primary flight control forces, human-in-the-loop control concepts could be explored and refined through a rapid iterative process before proceeding to test these concepts on an aircraft in flight.

To explore human-in-the-loop performance of EvP systems with an adequate degree of fidelity, a simulator with a realistic cockpit environment including primary flight controls was desirable. To have maximum ability to alter displays and controls, the flexibility to make changes to all aspects of the simulator software was also desired, making it unlikely that a commercially available simulator would suffice. It was determined that a custom simulator system would meet the project requirements most fully, if it could be developed for a reasonable cost by leveraging extensive use of commercial components.

2.2 FUSELAGE CAB.

For the simulator cab, an actual aircraft fuselage was obtained from a salvage yard. This solution was chosen since its realism was indisputable and all primary and secondary control linkages would already be in place. Figures 3 through 5 show the Cessna 182 fuselage. The empennage was removed, and the remainder of the fuselage was refurbished and shipped to the project laboratory.

Figure 3. Salvage Cessna 182 Cab

Figure 4. Original Cab Panel

Figure 5. Cab Interior

To support the research needs, the original instrument panel was replaced with a flat metal panel, enabling a broader range of instrumentation concepts to be explored. The fabricated panel is shown in figure 6.

Figure 6. Metal Flat Panel

2.3 FLIGHT CONTROLS.

The simulator was fully equipped with all the flight controls necessary to simulate in-flight visual flight rule operations. Figure 7 shows all the functioning controls.

Figure 7. Simulator Cockpit and all Functioning Aircraft Controls

Both control yokes were fully functional with built-in force feedback that accurately models the forces that would be felt from control surface deflections in flight and enable the addition of AP-related forces as desired.

Yoke position was measured and used to calculate the simulated control surface position for use in the flight dynamics model; and the dynamics model, in turn, determines what the applied force should be on the yoke. The rudder pedals are similarly driven, with realistic forces applied to them as well.

The elevator trim wheel position was measured and sent to the dynamics model. The trim wheel information is used to determine the equilibrium position for the yoke. As the elevator trim wheel is moved, the yoke moves accordingly, simulating the behavior of the actual aircraft. Rudder trim position is read and results in slight displacement of the rudder pedals as in the actual aircraft.

The flap lever (mostly obscured by the right control yoke in the photograph) operates the flaps, and the flap position is displayed on the flap indicator on the secondary display.

The engine control positions are sensed and used to provide inputs to the simulator engine model. The master switch and the ignition switch are also functional, and the engine can be shut off and restarted using them. The AP control display unit (CDU) is a touch screen that enables the operator to command the AP to perform various functions.

There are only three items in the panel that do not function as of this writing: the cowl flaps, the fuel selector, and the brakes. Although the cowl flap lever and the fuel selector can be moved, they do not provide inputs to the aircraft model. The toe brakes are not currently functional; although the aircraft dynamics model has the ability to model brakes, a mechanical apparatus for sensing brake application has not been installed.

The simulator emergency stop switch is one control in the cabin that is not found in an actual aircraft. This was added for safety (for personnel and equipment) due to the experimental nature of the work. The control actuators can produce in excess of 80 pounds of force, and it was determined that operators in the cabin should have an emergency shutdown capability in case of unstable behavior.

2.4 HARDWARE ARCHITECTURE.

The system electronic hardware consists of five computers, three projectors, three flat-panel displays, three linear motors, the associated motor drives, and all the sensors and controls required to simulate the aircraft. The system schematic is shown in figure 8.

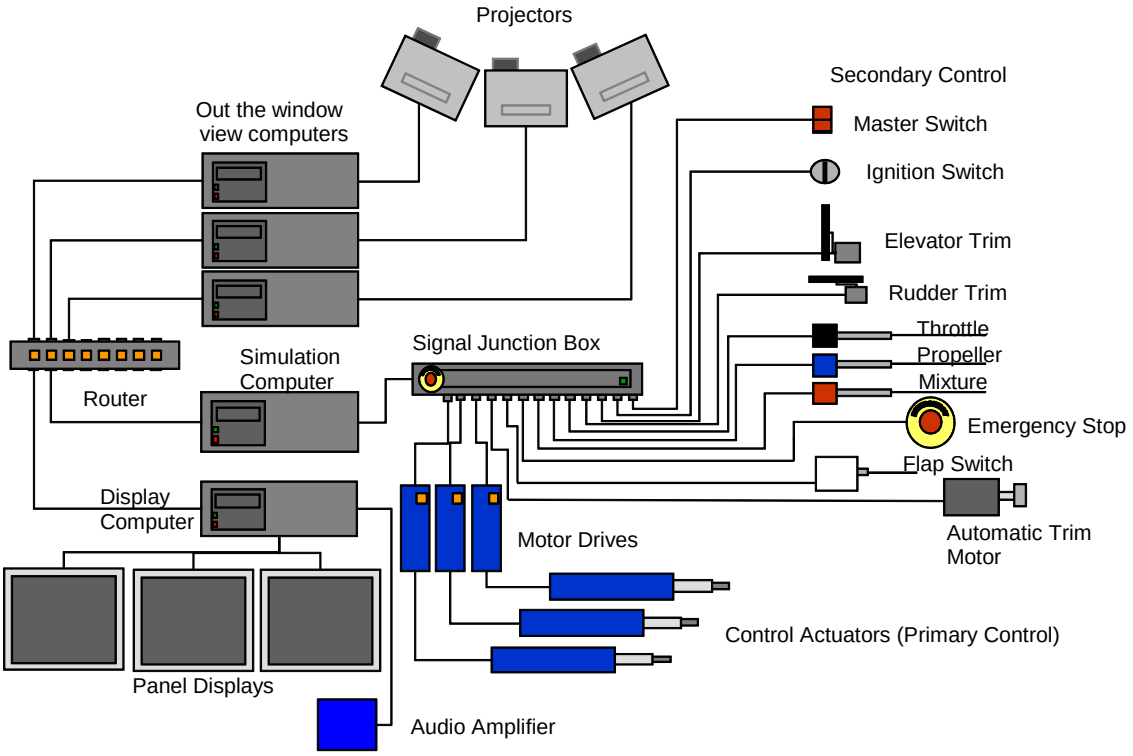

Figure 8. Diagram of the Hardware Architecture

The core of the simulation is the simulation computer, which runs the aircraft dynamics and the AP software. The simulation computer runs real-time Linux and has no graphics capability.

The display computer generates the instrumentation displays within the cab. The flat-panel liquid crystal displays (LCD) are connected directly to the display computer's graphics-processing card. The center screen is a touch screen that enables the operator to enter commands to the display computer. The display computer receives aircraft state information and AP status from the simulation computer for driving the displays. In turn, the simulation computer receives operator commands for the AP from the display computer. The display computer drives the aural warnings and is connected to the audio amplifier, which, in turn, drives speakers in the cab.

The simulation computer sends state information to the three out-the-window view computers, each of which drives a 60° viewing angle. The images are projected onto the screen using high-brightness digital projectors.

The simulation computer has several data acquisition cards that interface with a signal junction box. The junction box collects all the individual analog and digital signals from the peripherals and relays them via data cables to the simulation computer. These peripherals include the master switch, ignition switch, potentiometers measuring trim wheel positions, engine controls, and flap switch.

The junction box also interfaces with the motor drives for the control actuators. The motor drives send actuator positions through the junction box to the simulation computer, and receive the commanded applied forces from the simulation computer. The actuators have built-in encoders that provide measured actuator positions. Figure 9 shows a portion of the electronic hardware, which is located in the rear of the fuselage cab.

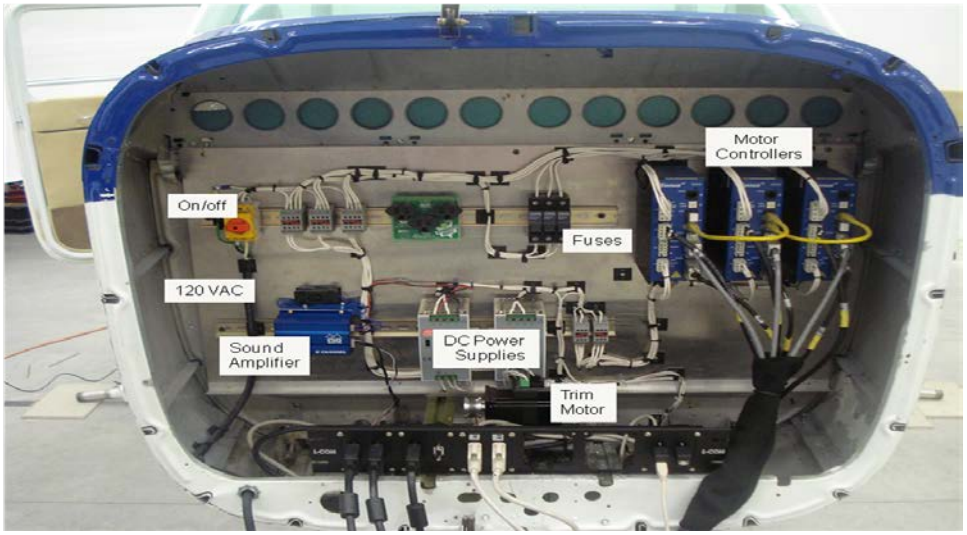

Figure 9. Hardware in Rear of Cab Supporting the Simulation

The elevator trim position can be driven by AP commands by means of a stepper motor, which receives signals through the junction box as well. The system has two emergency stop switches,

one in the cab and one on the junction box, which disable the actuators in case of undesirable behavior.

2.5 CONTROL LOADERS.

The primary flight controls are driven by linear control motors that are attached directly to the control yokes using a steel frame mounted to the engine mount attach points. An initial design option was to use rotary actuators acting on the control cables to provide simulated control forces but, due to the amount of force needed to simulate air loads, this solution was deemed undesirable. To simulate all possible flight circumstances, the servo needs to push/pull forces as high as 50 to 80 pounds to the control yokes (and rudder pedals). Because the yokes are designed to provide high mechanical advantage (about 4 to 1) over the control surfaces, the actuators that would be needed to provide the required loads on the cables were large and expensive. Therefore, it was determined that a direct connection from the control loaders to the primary flight controls would be a more attractive design option.

The placement of the linear actuators used for roll and pitch loading is shown in figures 10 through 12.

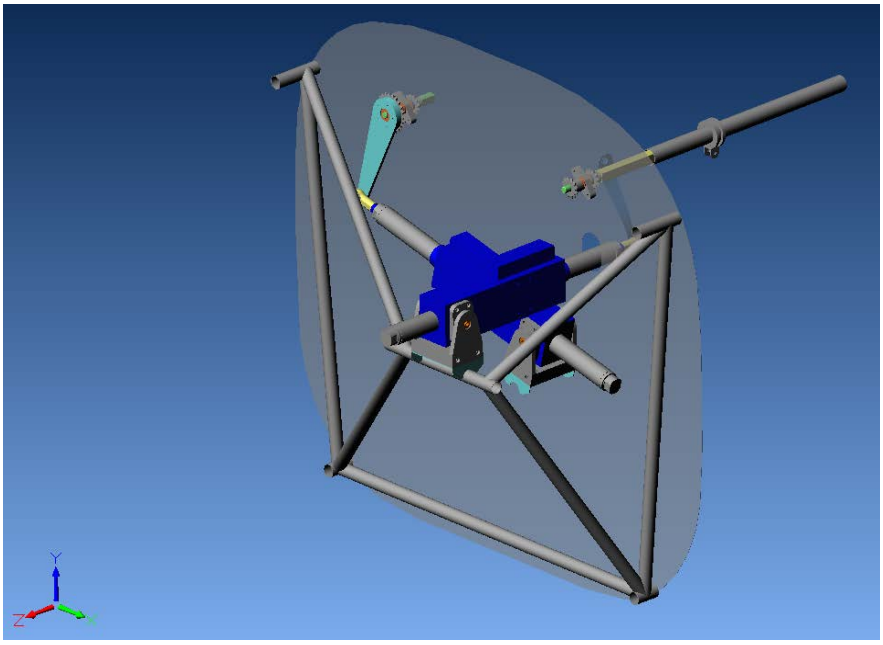

Figure 10. Solid Model Isometric View of Roll and Pitch Control Loader Actuators on Firewall

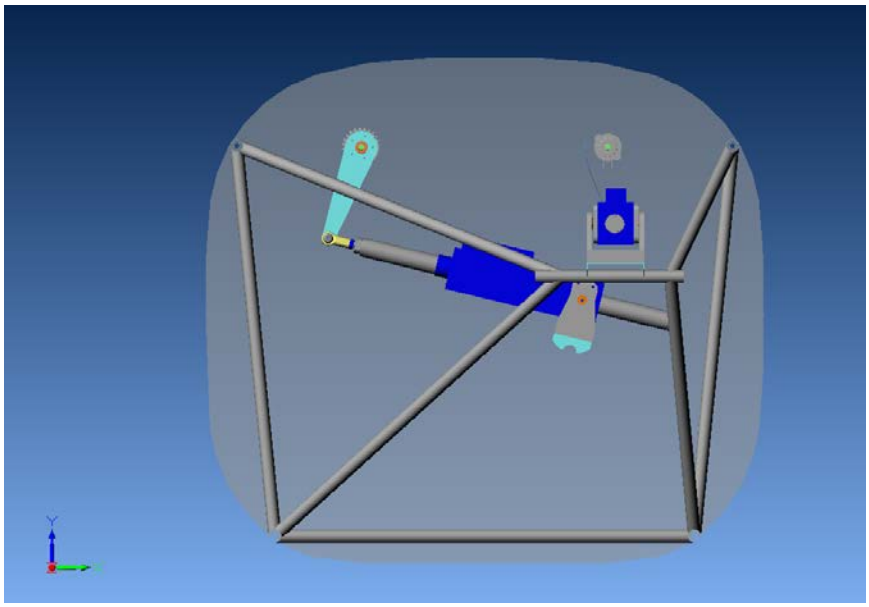

Figure 11. Solid Model Front View of Roll and Pitch Control Loader Actuators on Firewall

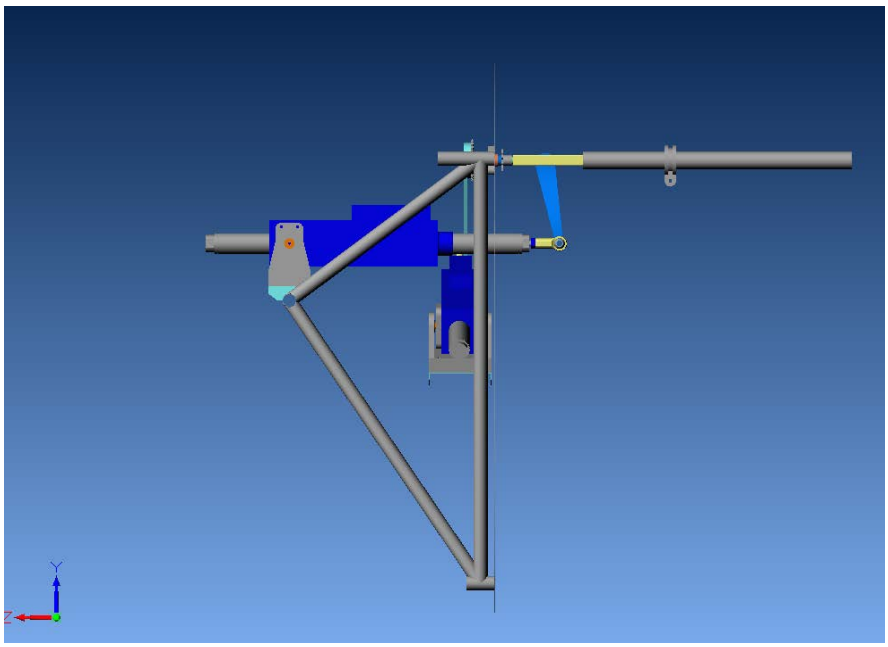

Figure 12. Solid Model Side View of Roll and Pitch Control Loader Actuators on Firewall

There were few places on the aircraft rigid enough to bear the loads of the actuators. Therefore, a steel frame replicating an engine mount was constructed and attached to the original engine mount attach points. Special parts were machined to interface with the original control system hardware so little of the original control system needed to be changed.

The completed actuator installation is shown in figure 13. The control loader for the rudder is just visible at the bottom edge of the photograph.

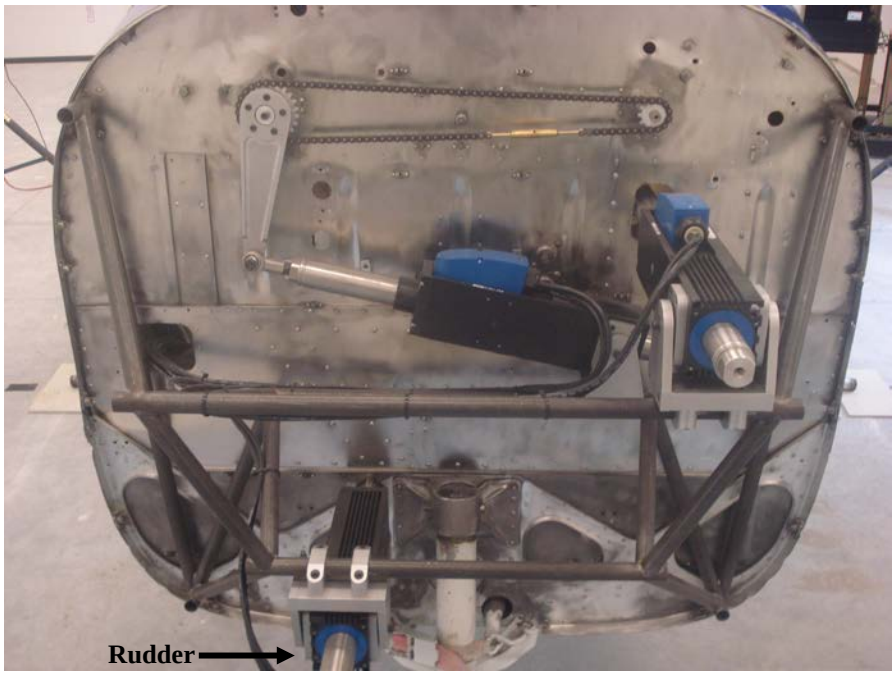

Figure 13. Completed Control Loader Apparatus

2.6 FLIGHT DISPLAYS.

All the software for cockpit instrument display graphics is written in OpenGL using gnu C++ and is compiled and run on a Linux computer using several high-end Nvidia™ graphics cards. There are three flight displays in the instrument panel:

- Primary panel
- Secondary panel
- AP CDU

The primary panel, shown in figure 14, is on the left side of the panel, and provides a computer-generated version of the following six standard instruments:

- Airspeed indicator
- Attitude indicator
- Altimeter
- Turn coordinator
- Directional gyro
- Vertical speed (VS) indicator

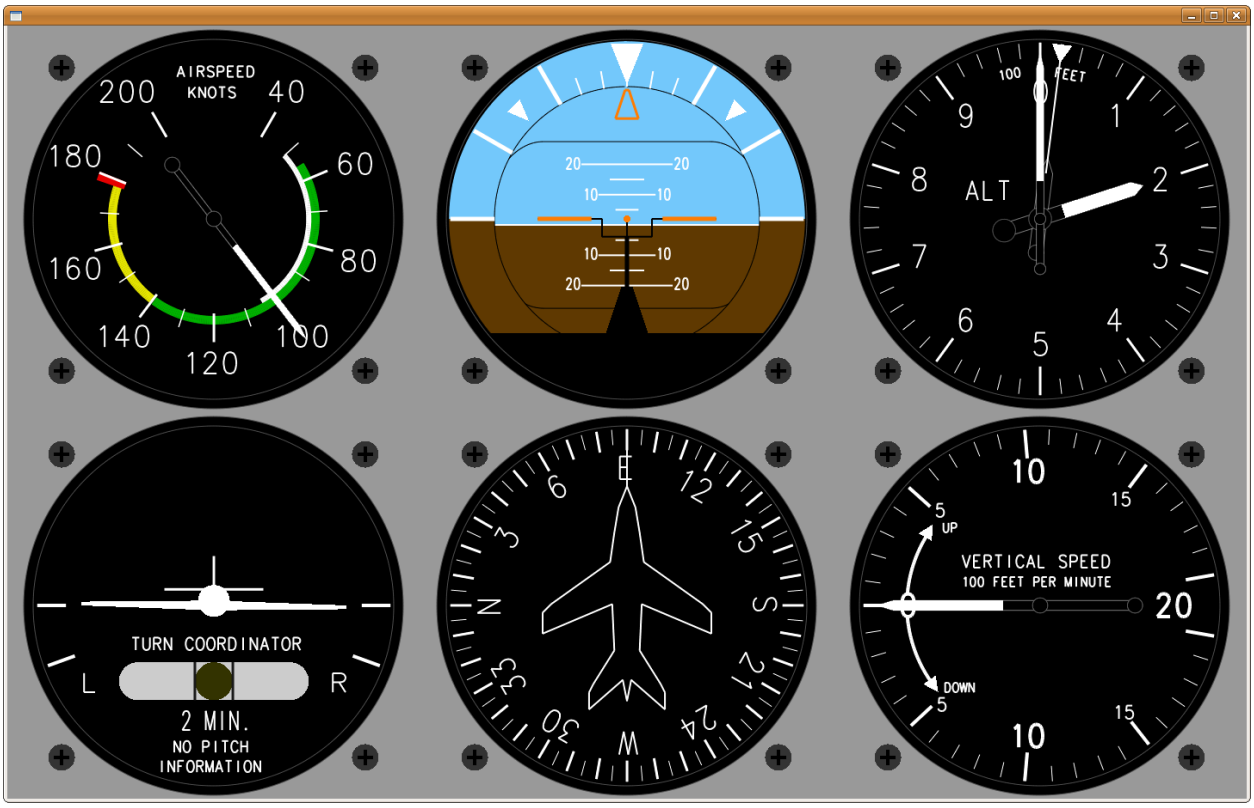

Figure 14. Primary Flight Instruments

The secondary panel contains four display elements and is located on the right side of the instrument panel. A screen capture from this display is shown in figure 15. The elements contained in the display are:

- Manifold pressure
- Engine RPM (rotations per minute) (tachometer)
- Flap position
- Angle of Attack (AoA)/flight load (g) meter

The manifold pressure gauge and tachometer are drawn to emulate the original Cessna 182 engine instruments. The flap indicator is modeled after the flap position indicator installed in older versions of the Cessna 182. The AoA/g meter is a hypothetical instrument that shows the aircraft's AoA and g's in a digital format on an instrument that could conceivably fit in a standard 3″ instrument hole. In addition to numerical readouts, the information is graphically represented on display bars that grow and change color with the magnitude of the signal. While the aircraft is in a safe range, AoA and g levels are indicated by green bars. As the levels increase, the bars change to yellow, indicating caution, and finally to red, indicating a dangerous situation.

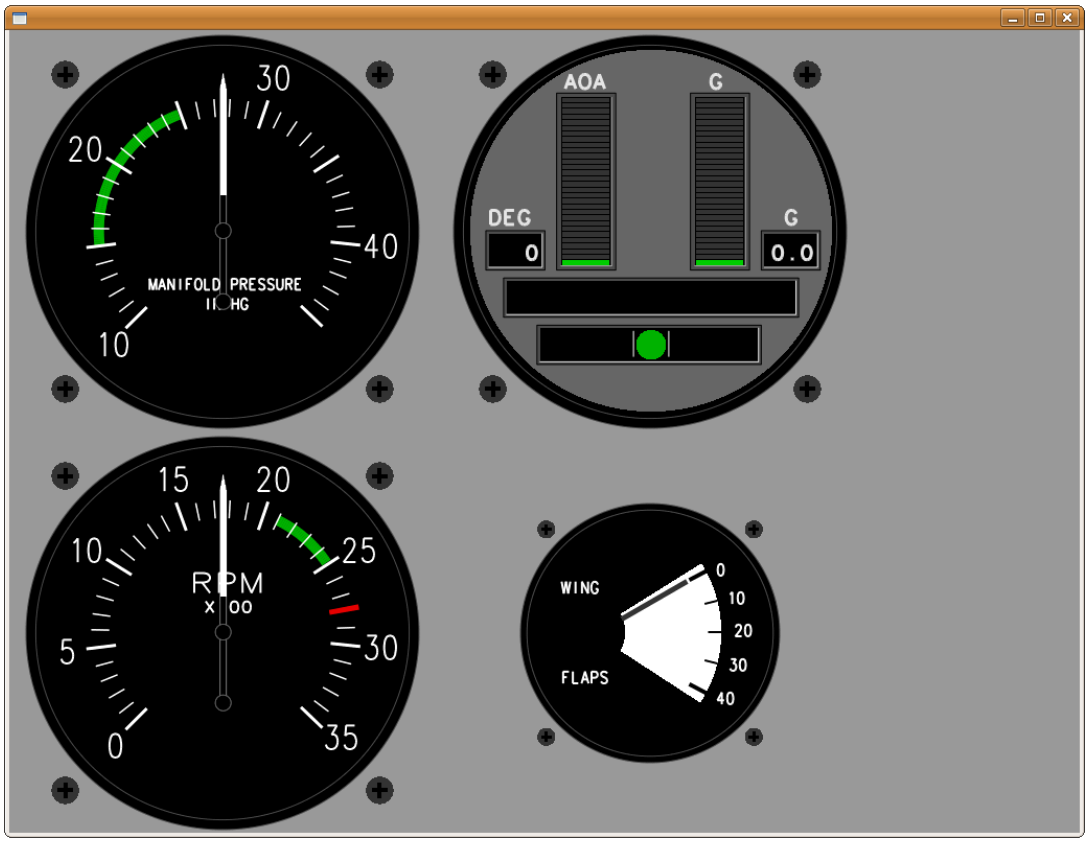

Figure 15. Secondary Flight Instruments

The third display is the center console containing the AP CDU. The screen is a touch screen and enables the operator to control the AP functions.

The simulator AP is a full-function AP, with additional nonstandard EvP features.

Among the standard AP features are a wing leveler and a heading capture algorithm for lateral control. For longitudinal control, the AP has VS and flight level change (FLCH) modes for controlling climbs and descents. Additionally, it has altitude capture and hold including altitude preselect. The AP features a straight and level button for automatically recovering from unusual attitudes after selection by the pilot.

Within the EvP system itself, there are four separate functional divisions. These are:

- Lateral stability augmentation
- Lateral EvP
- Longitudinal stability augmentation
- Longitudinal EvP

Figure 16 shows the CDU of the simulator AP. Note, each button changes to green to indicate when it is turned on. Additionally, in the event that EvP actions activate, corresponding visual warnings appear in the WARNINGS section of the CDU, in addition to aural annunciations.

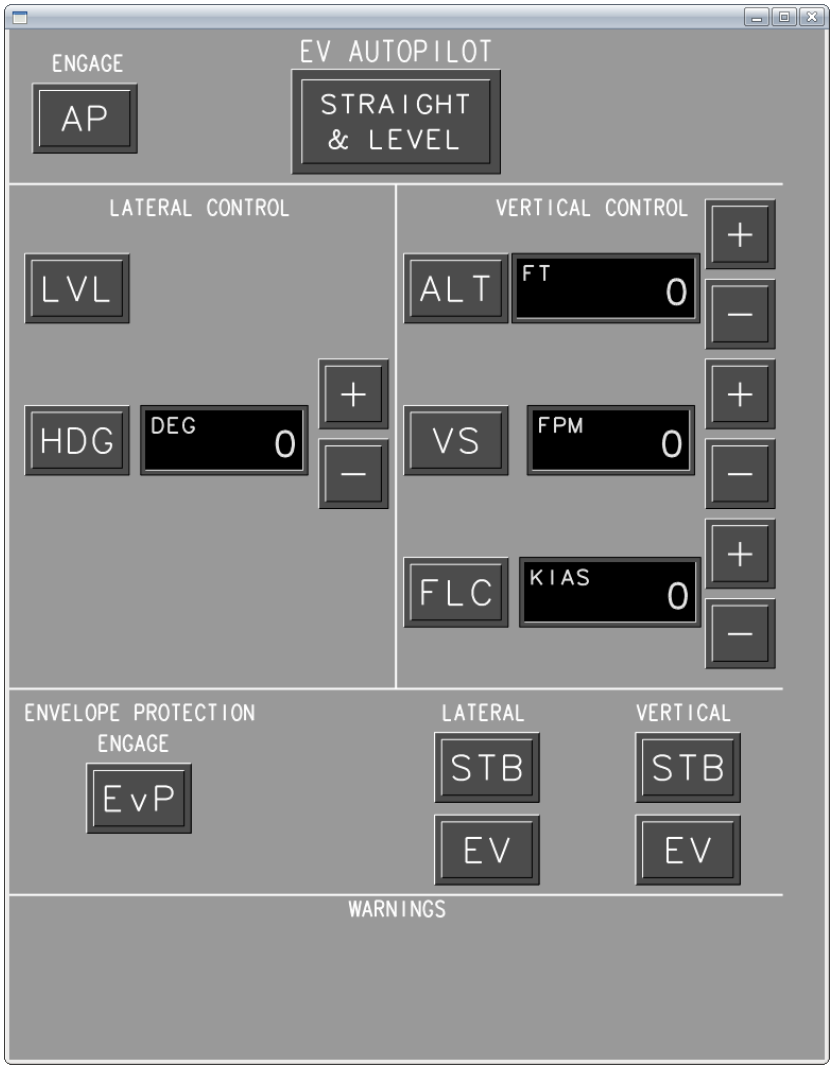

Figure 16. The AP CDU

A description of the individual features available through the CDU follows

- AP button—The AP button enables and disables the AP, but does not engage any particular AP function. EvP is controlled separately and is normally on by default. The principal purpose for the AP button is to give the pilot an efficient way to turn off all AP functions at once if so desired. The AP is automatically enabled if any of the AP mode buttons are pressed when the AP is off.

- Straight & Level button—The straight and level button recovers the aircraft from most unusual attitudes and engages the LVL and VS functions when complete.

- LVL button—The LVL button engages the lateral AP and rolls the wings level.

- HDG button—The HDG button engages the heading capture mode. The aircraft will turn towards the selected heading using a standard rate turn and capture the heading.

- ALT button—The ALT button engages altitude hold, which will command the aircraft to capture the current altitude (not the altitude displayed in the window, which is used for altitude capture purposes.

- VS button—The VS button commands the aircraft to climb or descend at the prescribed VS in the adjacent window. The aircraft will climb/descend towards the capture altitude displayed in the altitude capture window. At the appropriate time, the AP transitions to altitude hold and capture the altitude in the adjacent window.

- FLCH button—The FLCH button commands the aircraft to climb or descend at the prescribed indicated airspeed in the adjacent window. The aircraft will climb/descend towards the capture altitude displayed in the altitude capture window. At the appropriate time, the AP transitions to altitude hold and captures the altitude in the adjacent window.

- EvP button—The EvP button engages and disengages all EvP features.

- Lateral Stability (STB) button—The lateral STB button engages and disengages lateral stability augmentation, which gives the aircraft the tendency to always return to a wings-level attitude.

- Lateral EV button—The lateral envelope (EV) button engages and disengages lateral EvP, which resists bank angles greater than a desired magnitude (currently 45 degrees).

- Longitudinal STB button—The longitudinal STB button engages and disengages the longitudinal stability augmentation, which brings the aircraft to a near-level pitch attitude.

- Longitudinal EV button—The longitudinal EV button engages and disengages the longitudinal EvP, which resists overspeed conditions, excessive pitch angles, and near-stall AoAs.

3. FEEDBACK ALGORITHMS.

The EvP AP functionality is achieved using a series of feedback control algorithms, which are divided into three categories.

- AP functions
- Stability augmentation functions
- EvP functions

Generally, AP functions encompass conventional AP functionality in that they drive the aircraft to a particular state and do not allow simultaneous pilot interaction. AP functions are always

user-activated and do not have any capacity to self-engage, although they may self-disengage in some circumstances.

In contrast, the stability augmentation algorithms are designed to be on during piloted control of the aircraft. Stability augmentation algorithms are intended to be nearly imperceptible to the pilot while gently increasing the aircraft's tendency to return to a desirable state. Stability augmentation systems are on by default and remain on until disengaged; after disengagement, they may also be manually re-engaged.

The EvP features' general function is to drive the aircraft away from any particularly dangerous states but without any precise end-state target identified. They are designed to be tactilely obvious to a pilot without causing alarm. The EvP features are on in the background by default, but do not actively function until the aircraft state enters an undesirable region of the flight envelope. Since they do self-engage and self-disengage, they must be carefully designed to ensure that they do not create undesirable discontinuities in aircraft behavior when engaged.

Generally, all functions are separated into lateral and longitudinal modes of operation.

3.1 LATERAL AP.

The lateral AP has two modes of operation. The first is a wing leveler, and the second is a heading capture algorithm.

3.1.1 Wing Leveler.

The wing leveler is a basic bank angle controller, as shown in figure 17. Bank angle error is used to generate an aileron command to level the aircraft. In an ideal setting, this control law could exclusively consist of proportional control due to the natural integrating relationship between aileron deflection and bank angle. However, in cases where a roll bias exists (e.g., uneven fuel load), pure proportional control can fail to achieve a wings-level condition. To correct for this problem, a small amount of integrator control is added to remove any unexpected roll bias. The commanded aileron deflection is then sent to the actuator controller, which commands the surface to the desired position.

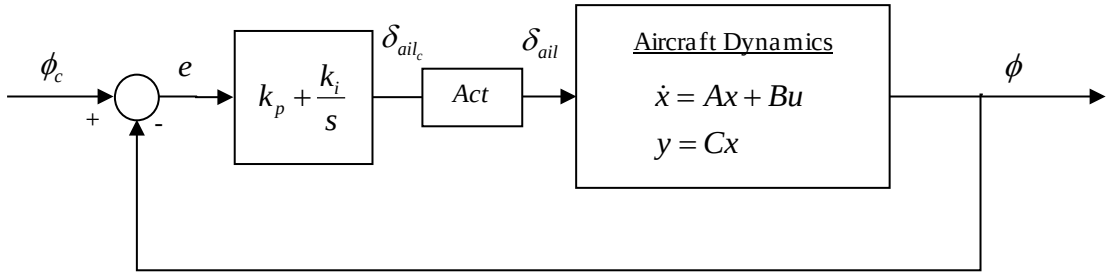

Act	Actuator dynamics	k_i	Integrator gain
ϕ	Roll angle	k_p	Proportional gain
ϕ_c	Commanded roll angle	s	Laplace parameter ($\sigma + i\omega$)
e	General error	$\dot{x}$	State vector derivative
δ_{ail}	Aileron deflection	y	Output vector
δ_{ail_e}	Commanded aileron deflection		

Figure 17. Lateral Wing Leveler

3.1.2 Heading Capture.

For heading control, a proportional heading loop is cascaded with a turn-rate controller, as shown in figure 18. The inner loop, turn rate control, uses proportional plus integral control to capture a particular turn rate. The commanded turn rate is calculated based on heading error. To prevent excessive turn rates, the commanded turn rate is bounded at the 3°/sec standard turn rate for instrument procedures.

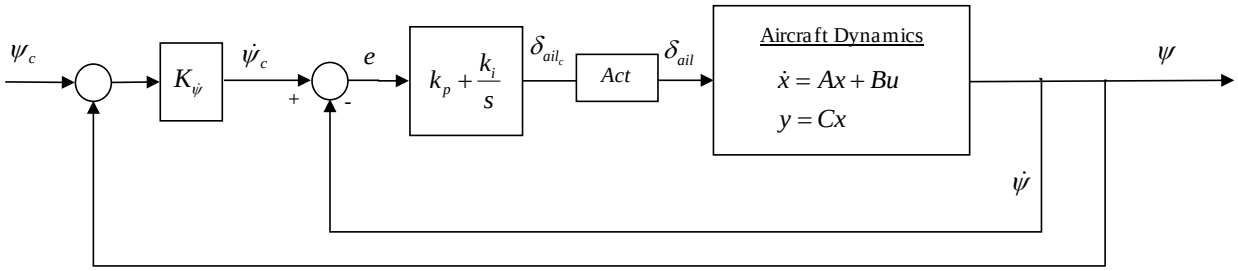

Act	Actuator Dynamics	$K_{\dot{\psi}}$	Turn rate gain
δ_{ail}	Aileron deflection	k_i	Integrator gain
δ_{ail_e}	Commanded aileron deflection	k_p	Proportional gain
ψ	Heading	s	Laplace parameter ($\sigma + i\omega$)
$\dot{\psi}_c$	Commanded turn rate	$\dot{x}$	State vector derivative
e	General error	y	Output vector

Figure 18. Heading Control

3.2 LONGITUDINAL AP.

The longitudinal AP has three main functions.

- VS
- FLCH
- Altitude hold/capture

3.2.1 The VS Mode.

The VS controller, as shown in figure 19, feeds back altitude rate errors to a proportional plus integral controller, which commands a given elevator position. The commanded elevator is then sent to the actuator controller, which drives the elevator to the desired position.

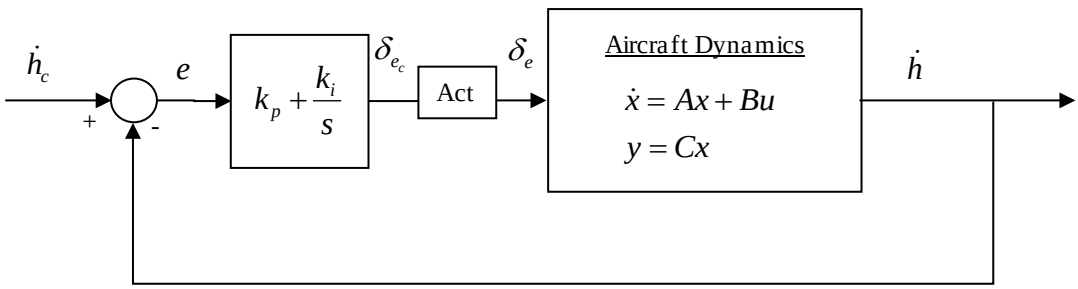

Act	Actuator Dynamics	s	Laplace parameter ($\sigma + i\omega$)
$\dot{h}_c$	Commanded altitude rate	δ_e	Elevator deflection
e	General error	δ_{e_c}	Commanded Elevator Deflection
$\dot{h}$	Altitude rate (VS)	$\dot{x}$	State vector derivative
k_p	Proportional gain	y	Output vector
k_i	Integrator gain		

Figure 19. The VS Controller

3.2.2 The FLCH Mode.

The FLCH mode is a speed on pitch control law. This control law consists of a proportional plus integral compensator in the feed-forward path with speed, and an altitude rate loop in the feedback path. The altitude rate loop is required for system stability, but does not change the commanded airspeed and resulting aircraft rate of climb. The control law is represented in equation 1.

$$\delta_{e_c} = \left(k_p + \frac{k_i}{s}\right)\left(V_{IAS_c} - V_{IAS}\right) - k_b\dot{h} \tag{1}$$

where

δ_{e_c}	= Elevator deflection
k_p	= Proportional gain
k_i	= Integrator gain
V_{IAS}	= Indicated airspeed
V_{IAS_c}	= Commanded indicated airspeed
k_b	= Feedback gain used for stabilization
$\dot{h}$	= Altitude rate (VS)

The block diagram is shown in figure 20.

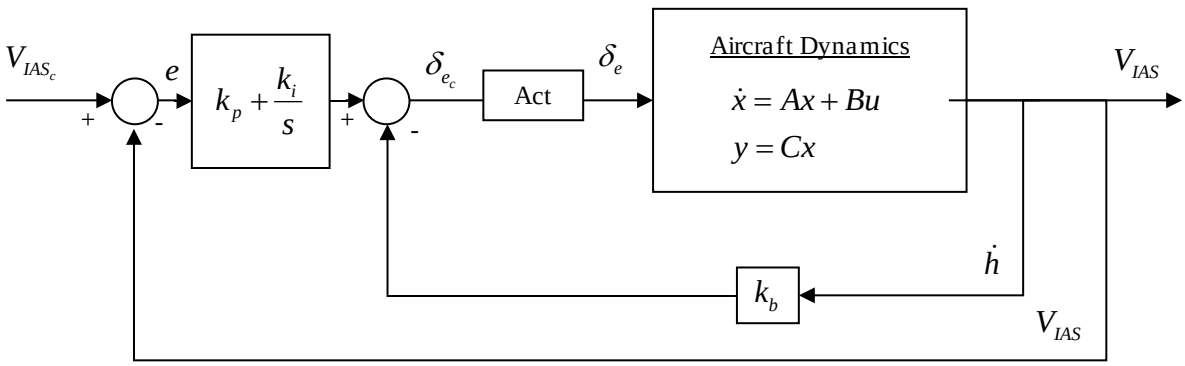

Act	Actuator Dynamics	δ_{e_c}	Commanded Elevator Deflection
e	General error	$\dot{x}$	State vector derivative
$\dot{h}$	Altitude rate (VS)	y	Output vector
k_p	Proportional gain	V_{IAS}	Indicated airspeed
k_i	Integrator gain	V_{IAS_c}	Commanded indicated airspeed
s	Laplace parameter ($\sigma + i\omega$)		
δ_e	Elevator deflection		

Figure 20. Speed Capture for FLCH Mode

3.2.3 Altitude Hold and Capture.

Altitude hold commands the aircraft to maintain a specific altitude, but rather than feed back altitude directly to the elevator, altitude error is used to generate a commanded altitude rate signal using a gain, $K_{\dot{h}}$. Equation 2 shows the relationship.

$$\dot{h}_c = K_{\dot{h}}\left(h_c - h\right) \tag{2}$$

where

h	= Altitude
h_c	= Commanded altitude

$\dot{h}_c$ = Commanded altitude rate

$K_{\dot{h}}$ = Altitude rate gain

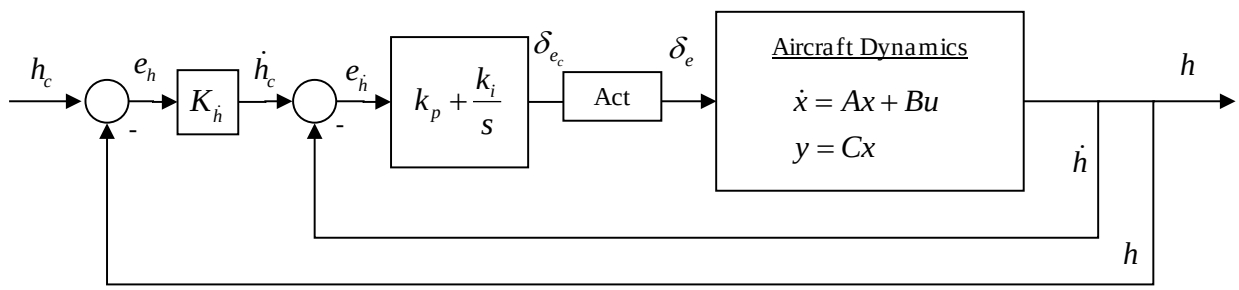

Act	Actuator Dynamics	$K_{\dot{h}}$	Altitude rate gain
h	Altitude	k_i	Integrator gain
h_c	Commanded altitude	k_p	Proportional gain
$\dot{h}$	Altitude rate (VS)	s	Laplace parameter ($\sigma + i\omega$)
$\dot{h}_c$	Commanded altitude rate	δ_e	Elevator deflection
e_h	Error in altitude	δ_{e_c}	Commanded Elevator Deflection
$e_{\dot{h}}$	Error in altitude rate (VS)	$\dot{x}$	State vector derivative
		y	Output vector

Figure 21. Altitude Hold and Capture

When an aircraft climbs or descends to a new altitude, the climb is accomplished using either VS mode or the FLCH mode. In either case, a transition must be made to capture the altitude at some point. The point where altitude hold is engaged is determined by evaluating the current climb rate with respect to the gain $K_{\dot{h}}$. To ensure a smooth transition, the altitude hold function is engaged when the product of the altitude error with $K_{\dot{h}}$ equals the current VS. The relation is shown in equation 3.

$$\left|\dot{h}\right| \geq \left|K_{\dot{h}}\left(h_c - h\right)\right| \tag{3}$$

where

h = Altitude

$\dot{h}$ = Altitude rate (VS)

h_c = Commanded altitude

$K_{\dot{h}}$ = Altitude rate gain

3.2.4 Control Surface Deflections.

Achieving the proper control surface deflections, even within the simulator, required the movement of the control linkage hardware to achieve the proper deflection. This proved more challenging than initially anticipated, so a special actuator controller was written to ensure that

the actual control displacements were close to the commanded value. To achieve this, a proportional plus integral plus derivative controller was implemented to command a control force based on control surface position. To prevent any large step inputs to the system, a "shaper" is used to preprocess the commanded control surface position. The shaper simply applies a low-pass filter to the intended control surface deflections to eliminate sharp discontinuities in commanded control surface deflections. The shaped command is then fed to the controller. The controller commands a force based on the control law, and that commanded force is sent to a limiter, which bounds the applied force. The controllers for both the elevator and aileron are shown in figure 22.

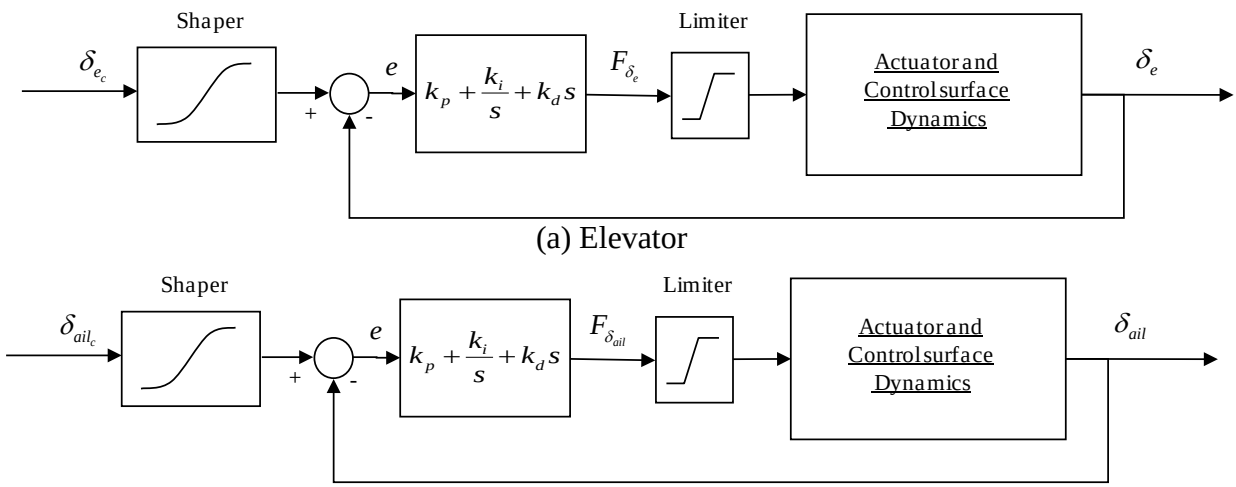

(a) Elevator

(b) Aileron

Figure 22. Controller for Commanding Control Surface Deflections

3.3 LATERAL STABILITY AUGMENTATION.

The purpose of lateral stability augmentation is to improve the lateral stability of the aircraft without interfering with its ability to be manually flown by the pilot. In this instance, improved stability is defined by giving the aircraft the tendency to always return to a wings-level position. The aircraft behaves as though it has greater dihedral in the wings; however, when the aircraft returns to level flight, it maintains precisely 0° bank. It is important to note that this type of full-time stability augmentation in a cable-controlled aircraft would require a different servo-actuation device than those currently used for light GA aircraft. To enable such features, the servo design must be force-limited and implemented so that the pilot retains full control of the aircraft while the servo is active.

The bank angle control law from the AP is used to add extra lateral stability, with two important additions:

- Reduced allowable control force
- Integrator disabled outside of 5° of bank

The reduced control force enables the pilot to easily override the always-on wing leveler. The wing leveler is only powerful enough to gently displace the ailerons from their equilibrium position. The reduced allowable control force is obtained by changing the actuator controller settings.

The integration part of the control law is disabled at bank angles above 5° because, if enabled during long piloted turns, the integrator would wind up at its allowable limit. This would create an undesirable roll bias in the opposite direction when the controls are neutralized. To avoid the problem, the integrator is deactivated when the bank angle exceeds 5°. The proportional control alone is allowed to function, and is sufficient to right the aircraft to within 5° of level. At that point, the integrator reactivates and the aircraft is returned to level flight. Figure 23 shows the bank angle stability augmentation.

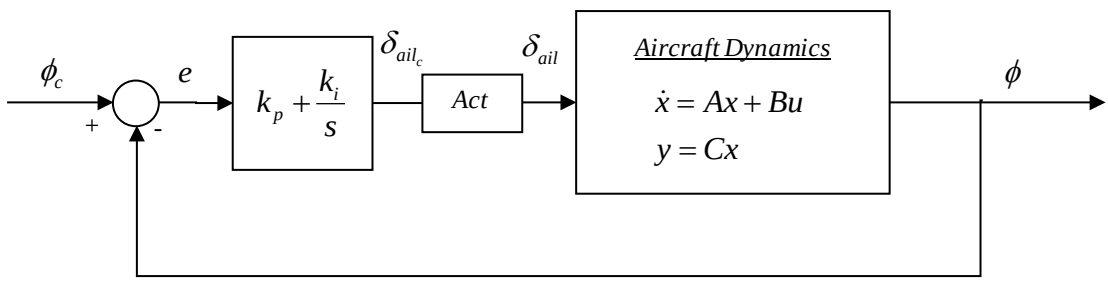

ϕ	Roll angle	δ_{ail}	Aileron deflection
ϕ_c	Commanded Roll Angle	s	Laplace parameter ($\sigma + i\omega$)
e	General error	$\dot{x}$	State vector derivative
k_i	Integrator gain	y	Output vector
k_p	Proportional gain		

Figure 23. Bank Angle Stability Augmentation

3.4 LONGITUDINAL STABILITY AUGMENTATION.

The purpose of the longitudinal stability augmentation is to increase the ease of flying the aircraft in pitch. However, unlike in the lateral case, there is no obvious design goal for control for longitudinal stability augmentation.

Initially, increased pitch rate damping was considered. However, pitch rate damping generally has the effect of increasing short-period damping rather than effectively damping the phugoid mode, which is the dominant mode for controllability in light aircraft. To change phugoid damping, pitch feedback is required. The problem with pitch feedback in this instance is that, unlike roll, there is no good pitch target that is always appropriate. The required pitch angle varies with aircraft trim and with the phase of flight. Therefore, it is not clear that pure pitch feedback would have the desired effect of increasing longitudinal stability, especially when introduced simultaneously with a human operator.

In simulator experiments, however, pitch feedback appears to work fairly well. Proportional pitch feedback, using a zero-pitch set point implemented with a control force limiter achieves the

desired stability augmentation results (see figure 24). Since the controller is strictly proportional, the human operator can easily override the controller with the yoke or the trim. At high pitch angles, the controller contributes a bias to the control force, which is indistinguishable from normal pitch force. However, the controller is quite effective at preventing large pitch swings due to an excited phugoid oscillation.

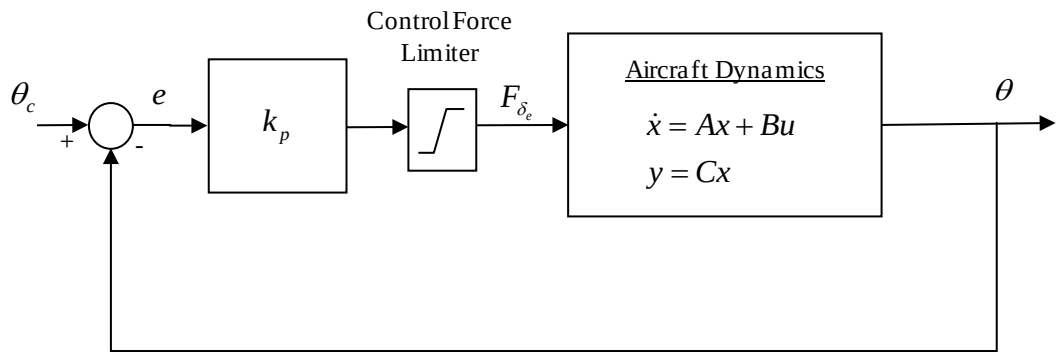

θ	Pitch angle	F_{δ_e}	Force applied to the elevator
θ_c	Commanded pitch angle	$\dot{x}$	State vector derivative
e	General error	y	Output vector
k_p	Proportional gain		

Figure 24. Longitudinal Stability Augmentation

One flight scenario, in particular, is useful for demonstrating the advantage of pitch feedback. In this scenario, an aircraft trimmed for level flight in cruise is pitched to a high pitch angle long enough for some airspeed to bleed off. At this point, the yoke is released and allowed to return to its equilibrium position. In this instance, the aircraft begins a gradual pitch change to a nose-down attitude. In an unaugmented aircraft, speed builds quickly and the aircraft often overspeeds and/or impacts the ground before the slow phugoid dynamics return the aircraft to level. However, with the stability-augmented aircraft, the pitch controller stops the aircraft at or near a zero-pitch attitude, preventing the wide oscillations in pitch.

3.5 LATERAL EvP.

The purpose of lateral EvP is to prevent excessive and presumably unintentional bank angles. On the surface, solving this problem appears straightforward. If the aircraft banks beyond a certain point, the controller can apply a restoring force, using some proportional control law. However, there are two problems with this simple approach:

- Controls can “snap back” if the pilot suddenly releases the yoke.
- Abrupt disengagement of the system can yield a perceived “bump” in the controls.

The first problem was observed during initial simulator tests, when a fairly benign control law slammed the aileron control to the extreme opposite position when the pilot released the yoke. In this case, the applied control force was being calculated as a simple function of bank angle, not aileron position, and the aircraft could not react fast enough in bank to prevent the controller

from slamming the yoke to the opposite extreme. Forces high enough to be noticeable to the pilot for the purposes of EvP were strong enough to cause this problem. Once the aircraft started to recover, this primitive controller suddenly turned itself off, and the air loads on the ailerons abruptly moved them back towards the neutral position.

To prevent this problem, aileron deflection rate is used as a feedback parameter, as shown in figure 25. With the rate term added to the feedback path of the controller, a large damping force is generated any time the ailerons start moving too fast. With sufficient tuning of the gains, a desirable response is achieved.

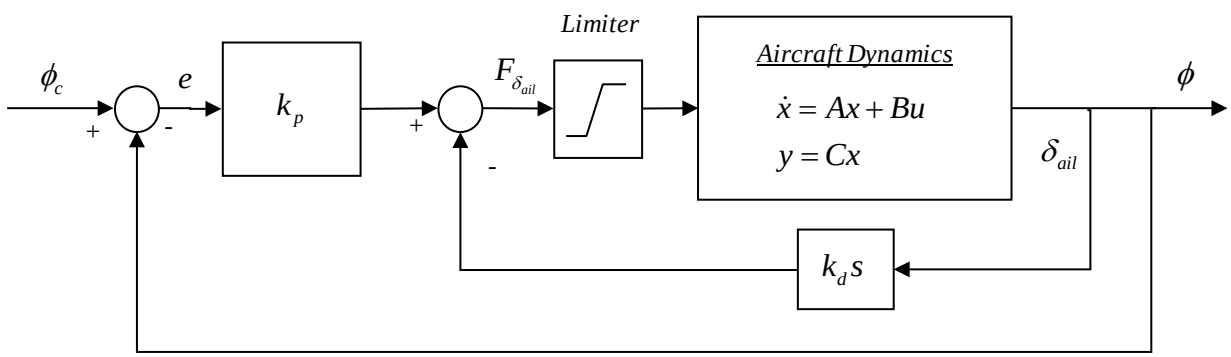

Figure 25. Bank Angle Envelope Control

The second problem encountered was a perceived discontinuity in control forces, or bump, when the system disengaged. Initially, the system simply disengaged when the bank angle of the aircraft returned to normal limits. However, if the ailerons were in motion at that time, a bump could be felt in the control yoke upon disengaging. The solution currently used to eliminate this problem is to maintain damping for several seconds after the proportional part of the controller ceases operating and gradually taper the damping term to zero.

3.6 LONGITUDINAL EvP.

There are three conditions that the longitudinal EvP system is designed to protect against:

- Stall
- Overpitch
- Overspeed

Each of these conditions involves applying pitch control force to move the aircraft away from the dangerous situation. The initial lessons learned from the development of lateral EvP are applied to the longitudinal cases as well; control surface rate is used in each case to avoid control yoke snap-back tendencies, and damping terms are tapered to zero upon disengaging the mode.

3.6.1 Stall.

Stall protection is one of the most important elements of EvP. It is designed to prevent the pilot from stalling the aircraft, which, at low altitude, could be catastrophic. In the current system, to prevent a stall, AoA is measured; if in excess of a certain prestall limit, AoA is fed back through a proportional controller to generate a nose-down stick force. Elevator deflection rate feedback is used to prevent any discontinuous yoke movements if a pilot releases the yoke. A force limiter is used as well to prevent large commanded forces. Figure 26 shows the stall prevention block diagram.

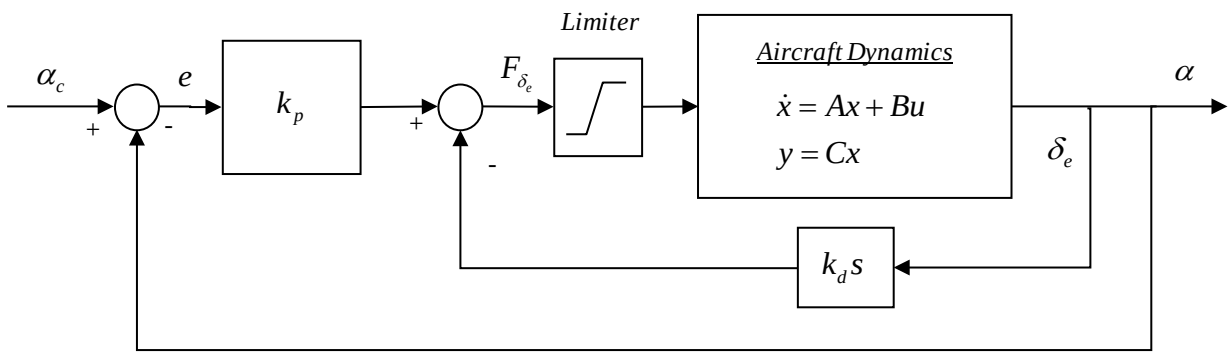

Figure 26. Stall Prevention

One problem unique to the stall system is the problem of very low-speed flight. If the pilot pulls the aircraft into a high pitch attitude and lets the speed drop well below normal stall speed and stalls the airplane, the initial force-based controller has the tendency to push the yoke full forward, since there is little aerodynamic stick force to oppose it. To solve this problem, the force limiter was modified to scale the maximum allowable force as a function of airspeed.

3.6.2 Overpitch.

Overpitch protection is activated when the aircraft exceeds a certain pitch bound, usually 20° in either direction. As with roll and stall EvP, an initial pitch EvP system was implemented as a force-limited proportional controller with control surface rate feedback to eliminate yoke snap-back tendencies. The problem encountered with overpitch was the tendency to overstress the aircraft when recovering. Several methods were considered as potential solutions to this problem, including implementing a force limiter as a function of airspeed. Ultimately, a more formal solution was employed using an inner loop to command g-force directly. In this controller, a proportional plus integral controller is contained in the inner loop around measured g-forces. The control force limiter and the control surface rate loop are contained in this loop as well (see figure 27).

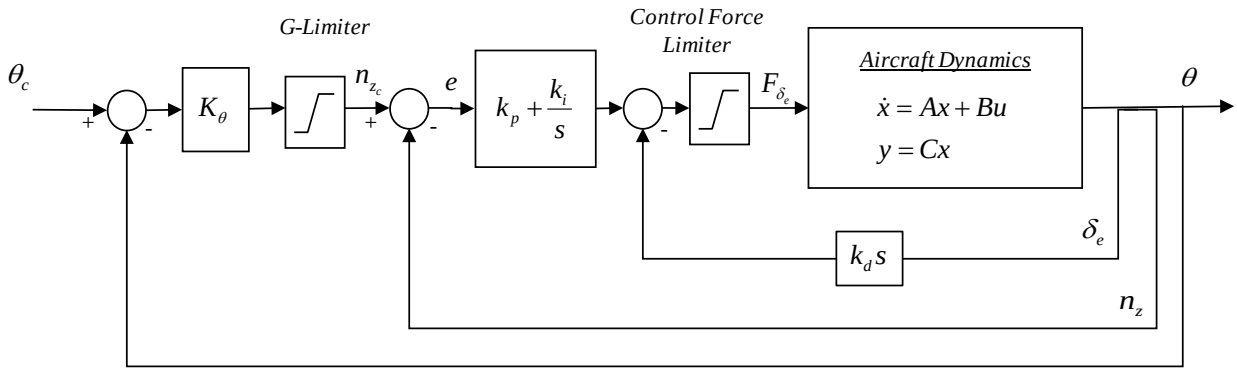

Figure 27. Overpitch EvP

Once a successful g-controller was functioning, a proportional pitch outer loop was employed to correct for excessive pitch. In the outer loop, a g-limiter is employed to ensure that commanded g-forces stay within a reasonable bound.

3.6.3 Overspeed.

The overspeed control law is designed to prevent the aircraft from exceeding its maximum speed. When the aircraft approaches maximum allowable speed, the aircraft will pitch up to prevent overspeed. Initial versions of this control law would invariably overstress the airframe, so a g-limiting strategy is employed in similar fashion to that used in the overpitch control. In this controller, a proportional plus integral controller is contained in the inner loop around measured g-forces. The control force limiter and the control surface rate loop are contained in this loop as well. Indicated airspeed is controlled in the outer loop.

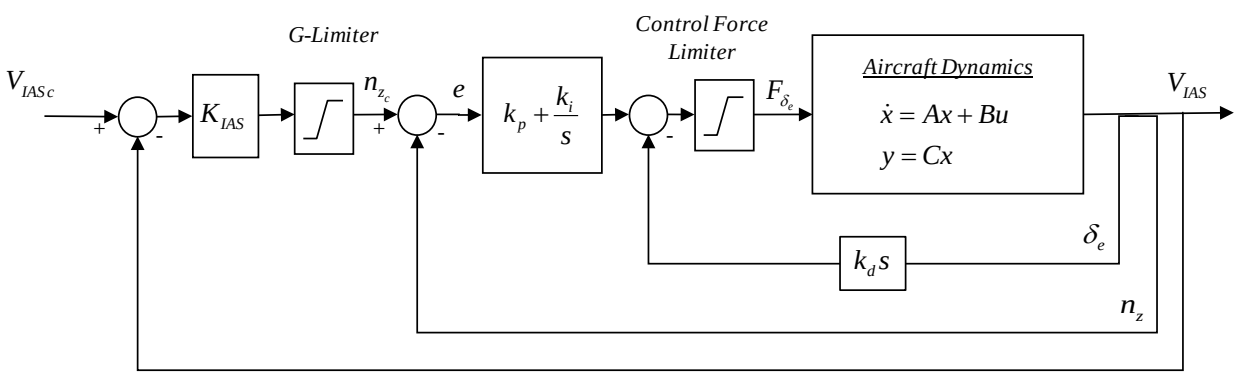

Figure 28. Overspeed EvP

3.6.4 Mode Switching.

One of the challenges in managing EvP features is establishing appropriate mode switching between the various control laws. Generally, mode-switching problems are of two distinct types.

- Mode switching between stability augmentation and EvP
- Prioritizing among simultaneous adverse conditions

As a general rule, only one control law should be running at a time. Otherwise, the system behavior may be unpredictable. Therefore, it is necessary to manage the prioritization between control laws in various situations.

With lateral control, mode-switching concerns are minimal; the stability augmentation system does not interfere with EvP and, therefore, both modes can run simultaneously. With longitudinal control, however, the stability augmentation system can interfere with the EvP features and potentially result in unpredictable behavior. In this case, it is clear that only one control law can run at a time. This means that the stability augmentation system must be carefully suspended before, and reactivated after, EvP features become active. To do this, a soft start is employed to allow the stability augmentation system to gracefully reengage without resulting in perceived discontinuities in control yoke forces.

In some cases, simultaneous adverse conditions can exist. This is not a problem in the lateral case since there is only one adverse condition to protect against. However, in the longitudinal case, it is possible for the aircraft to experience several adverse conditions at once. For instance, an aircraft can overspeed while in an excessive pitch down attitude and stall while in an excessively high pitch attitude. To solve this problem, a control law priority list was developed for longitudinal control. If an aircraft experiences multiple adverse longitudinal conditions at once, the EvP system will address them according to the following priority list, in order of decreasing priority:

- Stall
- Overspeed
- Overpitch

4. SUMMARY OF LESSONS LEARNED.

As of this writing, the Cessna 182 simulator continues to be used to derive important design principles that would apply to full- or part-time stability augmentation and EvP systems in light GA aircraft. The lessons learned to date are discussed the following sections.

4.1 GENERAL FEASIBILITY OF FULL-TIME STABILITY AUGMENTATION AND EvP.

Judging from the experience of three GA pilots who flew the simulator during its development, there did not appear to be any fundamental reason why full-time, always-on stability augmentation and EvP is objectionable. Assuming the existence of high-bandwidth, force-

limited servos, it is possible to limit the force contribution of the stability augmentation and EvP system such that it is virtually transparent to the pilot manually manipulating the controls. During normal maneuvering, the pilot would only notice a particular tendency for the aircraft to return to straight and level flight when hands are removed from the controls. Only during operation at the edges of the normal flight envelope, when EvP features automatically engage, would the pilot become aware of active control of the aircraft by the feedback control system pushing it away from a hazardous flight condition.

While the stability augmentation and flight EvP systems would nominally be "on" by default, it would be possible for flight training purposes or other unusual operational reasons for the pilot to disengage these features, in much the same way as the traction control system in modern automobiles may be disengaged, but is on by default.

4.2 TACTILE CHARACTERISTICS OF CONTROL.

The quality of tactile feedback is important to the pilot when flying an airplane equipped with full-time stability augmentation and EvP. Although it is generally unlikely that the pilot will become aware of the system state through the forces perceived through the control yoke (except in extreme situations, such as push-forward during stall protection), it is important not to provide disconcerting tactile cues through the control yoke as the system engages and disengages. To accommodate this requirement, a simple temporal shaping of the control surface deflection commands generated by the control surface, prior to sending them to the servos, is sufficient to eliminate sudden and rapid changes in control forces.

In addition, it is important to guard against sudden, rapid deflections of the controls in the event the pilot is exerting considerable force and suddenly releases the control yoke or stick. One simple mechanism for accomplishing this is to add a damping term to the control system, where the damping is proportional to the rate of change of control surface deflections.

4.3 MODE CLARITY.

It is crucially important that it be absolutely clear to the pilot what the AP, stability augmentation system, and/or EvP system are doing. In this regard, although the continuing operation of typical feedback control features (such as full-time lateral or longitudinal stability augmentation) need not be specially annunciated, it should be easy for the pilot to check visually to verify that these features are on. Good design dictates that it should be easy, at a glance, to verify which features of the AP/stability augmentation/EvP system are enabled to perform their intended function at any particular time.

In addition, whenever a special intervention occurs, such as the application of larger forces to command down elevator during an incipient stall, this must be annunciated in an unmistakable manner to the pilot to avoid confusion. It is clear from operating the simulator during such EvP interventions that visual annunciation alone is generally insufficient, as the pilot may not be looking at the instrument panel during the operation, but may be looking out the window. Audio annunciation is crucially important, and should consist not merely of a generic sound, such as a beep or buzzer, but should be a plain-language audio annunciation of the condition that has led to

the intervention. Examples during a stall intervention would be "Stall, Stall" and during an overbank situation would be "Overbank, Overbank." This type of plain-language audio annunciation gives the pilot the necessary mental cue to understand why the control system is doing what it is doing. A visual annunciation is also desirable at a suitable location (e.g., on the primary flight display, if so equipped, or on the AP control/display unit, if not) to reinforce the audio information that is being heard.

4.4 PILOT OVERRIDE OF FEATURES.

As a general design principle of any AP, stability augmentation, or EvP system, it should be possible for the pilot to override the system in the following two ways.

First, by simple application of sufficient force to the controls, it should be possible to overrule whatever commands the AP system is attempting. In practice, this is accomplished in conventional APs with servo slip clutches or shear pins. In full-time stability augmentation and EvP systems, it is usually implemented by active force limiting of the servo-actuation mechanisms, to allow the pilot to retain manual override if desired, in addition to standard design safety features, such as slip clutches or shear pins.

Second, even in systems that are on by default, it should be possible to manually deactivate the system. However, in this case, the aircraft is no longer protected as it normally would be, and the fact that this less-protected state has been entered should be made obvious to the operator. Suitable means would be a combination of clear visual display of the disabling of the system, and regular audio annunciation of the fact that it is disabled. These general principles have not been fully explored in the simulator as of this current report.

4.5 METHODOLOGY FOR EVALUATION OF CANDIDATE SYSTEMS.

One lesson of the simulator stands out with respect to certification of future systems. The cockpit of an aircraft is a complex, evolving environment subject to a wide array of circumstances and a flow of events that cannot be adequately captured on paper. It is not possible to fully appreciate the cadence and interactions of any candidate AP/stability augmentation, or EvP system in combination with aircraft and human operator, solely by reference to written evidence alone. To render judgment on the appropriateness of any design, the operation of the system in a variety of representative circumstances by pilots and designers skilled and knowledgeable in the art of aircraft cockpit design and aircraft operations must be undertaken. General principles apply, but their significance can only be properly appreciated in the real-time environment of aircraft operations.

5. FUTURE DIRECTIONS.

For the immediate future, it is recommended to continue using the simulator described herein to further identify, define, and elaborate on the needed characteristics of full-time stability augmentation and EvP systems for light GA aircraft. The simulation facility does have utility in this regard, and may have future utility for addressing other human-in-the-loop questions regarding systems for GA aircraft as well.

While the simulator is a very useful tool for such purposes, it has certain limitations that should be noted. Currently, it is not equipped with the full set of navigation instrumentation that would make it suitable for assessing Instrument Flight Rules operations, although this could be added in the future, if desired. For the purposes of the current work, the most obvious limitation of the system is that it does not expose the pilot to the inertial stimuli due to acceleration and rotation of the aircraft that would be present in actual flight (or, to some degree, in a full-motion simulator). It is notable that in the absence of acceleration stimuli, when exploring the outer edges of the flight envelope, pilots tend to engage in flight maneuvers that yield higher-amplitude accelerations than they would in an actual aircraft in flight.

For these and other reasons, it is still desirable to test system concepts initially developed in a ground simulator by taking them to the next stage of development, which requires using a flight test vehicle.

6. REFERENCES.

1. Krey, N.C., "2007 Nall Report, Accident Trends and Factors for 2006," AOPA Air Safety Foundation, 2007.

2. Duerksen, N., "Fuzzy Logic Adaptive Decoupled Flight Controls for General Aviation Airplanes," Doctoral Thesis, Wichita State University, 1996.