DOT/FAA/TC-13/1

Federal Aviation Administration
William J. Hughes Technical Center
Aviation Research Division
Atlantic City International Airport
New Jersey 08405

Sensory Prognostics and Management Systems (SPMS)

June 2013

Final Report

This document is available to the U.S. public through the National Technical Information Services (NTIS), Springfield, Virginia 22161.

This document is also available from the Federal Aviation Administration William J. Hughes Technical Center at actlibrary.tc.faa.gov.

U.S. Department of Transportation
Federal Aviation Administration

NOTICE

This document is disseminated under the sponsorship of the U.S. Department of Transportation in the interest of information exchange. The U.S. Government assumes no liability for the contents or use thereof. The U.S. Government does not endorse products or manufacturers. Trade or manufacturers' names appear herein solely because they are considered essential to the objective of this report. The findings and conclusions in this report are those of the author(s) and do not necessarily represent the views of the funding agency. This document does not constitute FAA policy. Consult the FAA sponsoring organization listed on the Technical Documentation page as to its use.

This report is available at the Federal Aviation Administration William J. Hughes Technical Center's Full-Text Technical Reports page: actlibrary.tc.faa.gov in Adobe Acrobat portable document format (PDF).

Technical Report Documentation Page

1. Report No.	2. Government Accession No.	3. Recipient's Catalog No.
DOT/FAA/TC-13/1		

4. Title and Subtitle	5. Report Date
SENSORY PROGNOSTICS AND MANAGEMENT SYSTEMS (SPMS)	June 2013
	6. Performing Organization Code
7. Author(s)	8. Performing Organization Report No.
Kirby Keller and Jeanne Maggiore	
9. Performing Organization Name and Address	10. Work Unit No. (TRAIS)
The Boeing Defense, Space and Security P.O. Box 516 St. Louis, Missouri 63166	
	11. Contract or Grant No. OTA DTFACT-09-R-80001
12. Sponsoring Agency Name and Address	13. Type of Report and Period Covered
U.S. Department of Transportation Federal Aviation Administration Northwest Mountain Region—Transport Airplane Directorate 1601 Lind Avenue, SW Renton, WA 98057	Final Report October 2009 to January 2012
	14. Sponsoring Agency Code ANM-11

15. Supplementary Notes

The Federal Aviation Administration William J. Hughes Technical Center Aviation Research Division COR was Michael Walz.

16. Abstract

This document is the final report for the Sensory Prognostics and Management Systems (SPMS) program. The SPMS program developed and evaluated designs to integrate advanced diagnostic and prognostic capabilities onto commercial aircraft. This included gathering and communicating data from the continuous monitoring of aircraft systems, the observation of current system states, and the processing of these data to support proper maintenance and repair actions. In this program, baseline commercial aircraft were identified as well as SPMS applications for various subsystems. The list of possible applications was downselected to a reduced number that were believed to offer the highest value. Requirements, designs, and system architectures were developed for these applications. The application areas are engine life-ing, engine condition-based maintenance, thrust reverser, engine start, tires and brakes, Environmental Control System (pneumatics and air conditioning), generator, and hard landing/structural loading. The SPMS program products include 1) application sensors, functions, and interfaces; 2) health management system architecture, descriptions of certification requirements, and approaches; 3) the results of cost-benefit analyses, and 4) recommended standards and technology gaps. In this program, the Boeing Company was supported by Hamilton Sundstrand, Teledyne, and Scientific Monitoring, Inc.

17. Key Words	18. Distribution Statement
Diagnostics, Prognostics, Health management, Usage based, Cost benefit analysis, Sensors, Wireless, Communications, Avionics architectures, Health management architectures, System integration, Commercial aircraft, Standards and technology gaps.	This document is available to the U.S. public through the National Technical Information Service (NTIS), Springfield, Virginia 22161. This document is also available from the Federal Aviation Administration William J. Hughes Technical Center at actlibrary.tc.faa.gov.

19. Security Classif. (of this report)	20. Security Classif. (of this page)	21. No. of Pages	22. Price
Unclassified	Unclassified	152	

Form DOT F 1700.7 (8-72) Reproduction of completed page authorized

ACKNOWLEDGEMENTS

The Boeing Company team would like to thank the Federal Aviation Administration technical point of contact, Mike Walz, general engineer for the software and electronics section ANG-E271, for his insightful technical expertise and programmatic guidance throughout the program.

TABLE OF CONTENTS

			Page
EXECUTIVE SUMMARY			xiv
1.	INTRODUCTION		1
2.	BASELINE AIRCRAFT AND ARCHITECTURE		4
	2.1	The Dedicated SPMS Architecture	6
		2.1.1 Advantages of Dedicated Architecture	7
		2.1.2 Disadvantages of Dedicated Architecture	7
	2.2	The Shared SPMS Architecture	8
		2.2.1 Advantages of Shared Architecture	9
		2.2.2 Disadvantages of Shared Architecture	9
	2.3	The Hybrid SPMS Architecture	9
3.	THE SPMS EFFECTIVENESS METRICS		11
4.	IDENTIFICATION OF HIGH-POTENTIAL SPMS APPLICATIONS		13
5.	THE SPMS DEFINITION AND SYSTEM DESIGN		14
	5.1	The Health Management Design Considerations	15
		5.1.1 Cost Factors	15
		5.1.2 The SPMS Market Share	16
		5.1.3 The Health Management Maturation	18
		5.1.4 Extracting Data From Existing Subsystem Controllers	18
		5.1.5 Implementation Flexibility	19
		5.1.6 Exploiting Estimates of RUL	19
		5.1.7 Handling of Subsystem Data	20
		5.1.8 Certification Approaches for SPMS Designs	20
6.	INTRODUCTION TO SPMS APPLICATIONS		22
	6.1	Engine Life-ing Application Requirements and Description, Designs, Cost-Benefit Analysis, and Certification Considerations	23
		6.1.1 Engine Life-ing Application Requirements and Description	23
		6.1.2 Engine Life-ing Design	24
		6.1.3 Engine Life-ing Cost-Benefit Analysis	26

6.1.4 Engine Life-ing Certification Considerations and Approach 28

6.2 Engine CBM Application Requirements and Description, Designs, Cost-Benefit Analysis, and Certification Considerations 28

6.2.1 Engine CBM Application Requirements and Description 28
6.2.2 Engine CBM Design 29
6.2.3 Engine CBM Cost-Benefit Analysis 35
6.2.4 Engine CBM Certification Considerations and Approach 36

6.3 Thrust Reversers Application Requirements and Description, Designs, Cost-Benefit Analysis, and Certification Considerations 37

6.3.1 Thrust Reverser Application Requirements and Description 37
6.3.2 Thrust Reverser Design 39
6.3.3 Thrust Reverser Cost-Benefit Analysis 41
6.3.4 Thrust Reverser Certification Considerations and Approach 42

6.4 Engine Start SPMS Requirements, Designs, Cost-Benefit Analysis, and Certification Considerations 42

6.4.1 Air Starter System Application Requirements and Description 42
6.4.2 Air Starter Application Design 46
6.4.3 Air Starter Cost-Benefit Analysis 48
6.4.4 Air Starter Certification Considerations and Approach 48

6.5 Tire Application Requirements and Description, Designs, Cost-Benefit Analysis, and Certification Considerations 49

6.5.1 Tire Application Requirements and Description 49
6.5.2 Tire Design 49
6.5.3 Tires Cost-Benefit Analysis 54
6.5.4 Tires Certification Considerations and Approach 54

6.6 Brakes SPMS Application Requirements and Description, Design, Cost-Benefit Analysis, and Certification Considerations 55

6.6.1 Brakes SPMS Application Requirements and Description 55
6.6.2 Brakes Application Design 57
6.6.3 Brakes Certification Considerations and Approach 60

6.7 Environmental Control System SPMS Requirements, Designs, Cost-Benefit Analysis, and Certification Considerations 60

6.7.1 The ECS Application Requirements and Description 60
6.7.2 The SPMS Design 62

6.7.3 Air Conditioning and Pneumatic Cost-Benefit Analysis 74
6.7.4 The ECS Air Conditioning Cost-Benefit Analysis for Hybrid Aircraft 75
6.7.5 The ECS Certification Considerations and Approach 75

6.8 Generator SPMS Requirements, Designs, Cost-Benefit Analysis, and Certification Considerations 75

6.8.1 Generator SPMS Application Requirements and Description 75
6.8.2 Generator Design 76
6.8.3 Generator Cost-Benefit Analysis 81
6.8.4 Generator Certification Considerations and Approach 81

6.9 Hard Landing SPMS Requirements, Design, Cost-Benefit Analysis, and Certification Considerations 82

6.9.1 Hard Landing SPMS Application Requirements and Description 82
6.9.2 Hard Landing Design 82
6.9.3 Hard Landing/Structural Loading Cost-Benefit Analysis 87
6.9.4 Hard Landing/Structural Loading Certification Considerations and Approach 87

7. SYSTEM DESIGN AND ARCHITECTURE 88

7.1 Dedicated Platform 89
7.2 Hybrid Platform 94
7.3 Shared Platform 95

8. SYSTEM COST-BENEFIT MODELING AND ANALYSIS 97

8.1 Flight Operations for Baseline Aircraft 97
8.2 Supporting Data and Modeling Aircraft Subsystems and Faults 98
8.3 The SI Cost 99
8.4 Modeling Health Management Capabilities 99

8.4.1 Prognostic Coverage 99
8.4.2 Diagnostics 100
8.4.3 Life-ing 101

8.5 Cost Model Ground Rules and Assumptions 101

9. TECHNOLOGY GAPS, SPMS STANDARDS, AND ROADMAP 103

9.1 Roadmap 103
9.2 System Level Technology and Standards 105

9.2.1 Low Footprint Communications Links 105

9.2.2 High-Power Energy Harvesting 108
9.2.3 Accessing Data From Subsystem Controllers 109
9.2.4 Modular Architecture 109
9.2.5 Software Architecture 110
9.2.6 Hardware Interfaces 110

9.3 Summary of Application Technologies, Standards, and Guidelines 110

9.3.1 Engine Life-ing 112
9.3.2 Engine CBM 113
9.3.3 Engine Starter 113
9.3.4 Pneumatics 114
9.3.5 Air Conditioning 114
9.3.6 Thrust Reverser 115
9.3.7 Tires and Brakes 115
9.3.8 Hard Landing/Structural Integrity 116
9.3.9 Generator 116

10. SYSTEM DEMONSTRATIONS 117

10.1 Wireless Landing Gear Strain Monitoring Demonstration 117
10.2 Wireless Connectivity 118

10.2.1 Test Setup 118
10.2.2 Test Results 119

11. REFERENCES 119

APPENDIX A—Descriptions of Pre-Down-Selected System Applications

LIST OF FIGURES

Figure		Page
1	The SPMS Program Plan	4
2	Dedicated SPMS Architecture	6
3	Shared SPMS Architecture	8
4	Hybrid SPMS Architecture	10
5	Downselection of SPMS Application Areas	14
6	Representative Handling Critical Data Within SPMS	21
7	Engine Life-ing	26
8	Data to Support Oil Debris and Vibration Analysis	32
9	Blade Tip Clearance and Timing	32
10	Engine CBM Dedicated and Hybrid Design	34
11	Thrust Reverser Hydraulic Actuating System	37
12	Thrust Reverser Actuator	38
13	Thrust Reverser Slide and Track	39
14	Acoustic Monitoring Schematic for Thrust Reverser Dedicated Architecture	40
15	Thrust Reverser Hybrid Architecture	41
16	Engine Air Starter System	43
17	Typical Solenoid Valve	45
18	Typical Pneumatic Valve Open and Close	45
19	Air Starter HM—Dedicated and Hybrid Aircraft	47
20	The TPMS	50
21	Retrofit of a Commercial Off-the-Shelf Tire Pressure Monitoring System	51
22	Wireless Tire Pressure Sensor, Local Health Node, With an SPMS Processor	52
23	Brake Wear Pin	56
24	Brake Wear Estimation Based on Usage	58
25	The Brake Monitoring System	59
26	Pneumatically-Controlled Valve Prognosis Architecture	61
27	The ECS HM System	65
28	Fuel Valve Characteristic Transition Signatures	66
29	Fuzzy Sets Used in Generating Valve Health Indicator	66
30	Local Health Node for Motor Driven or Pneumatic Valve	67
31	Pneumatic Dedicated HM Design With Prognostics	69
32	Dedicated ECS (Air Conditioning and Pneumatics) HM Design	72
33	The IDG Mounted on Engine Accessory Drive	76
34	Interfaces for Dedicated and Hybrid Platform With Engine Area Node	79
35	Interfaces for Generator HM Shared Platform	80
36	Hard Landing Configurations for Dedicated and Hybrid Platforms	85
37	Architecture for Local Nodes in Hard Landing Application	88
38	Top-Level Conventional Design for Dedicated Platform	89
39	Engine Area Conventional Design for Dedicated System	90
40	Conventional Design for Hard Landing/Structural Loading	91
41	Design for Air Conditioning Area	91
42	The SPMS Design Exploiting Wireless Communications	92

43	The SPMS Shared Architecture	96
44	Hard Landing/Structural Loading Application Schematic for the Shared Architecture	97
45	Roadmap of Technologies and Standards	104
47	Representative Landing Gear Configuration	117
48	The Boeing 737-200 Airplane and Compartments	118

LIST OF TABLES

Table		Page
1	Baseline Fleet Properties	4
2	Metrics to Consider and Their Influencing Factors	12
3	Costs and Benefits of Prognostics and Usage-Based Life-ing vs Upgrades to Improve LRU Reliability	17
4	The ECS Components	63
5	Technologies to Monitor Generator Health	77
6	Flight Operations for Baseline Aircraft	97
7	Prognostic Coverage by Application	100
8	Summary of Technology Gaps	111

LIST OF ACRONYMS

AC	Alternating current
APU	Auxiliary Power Unit
ARINC	Aeronautical Radio, Inc.
ASN	Autonomous System Number
ATA	Air Transport Association of America
ATB	Aircraft Turn Back
BIT	Built-in test
BITE	Built-in test equipment
BTMS	Brake Temperature Monitoring System
CAC	Cabin Air Controller
CBA	Cost-benefit analysis
CBM	Condition-based Maintenance
CG	Center of gravity
CO	Carbon monoxide
COTS	Commercial Off-the-Shelf
CPC	Cabin Pressure Control
CRC	Cyclic Redundancy Check
ECS	Environmental Control System
EEC	Electronic Engine Control
EMA	Electro-Mechanical Actuator
ETOPS	Extended Operations
DC	Direct current
FAA	Federal Aviation Administration
FCC	Flight control computer
FHA	Fault Hazard Analysis
FOD	Foreign object debris
FFT	Fast Fourier Transform
FLG	Front loading gear
GCU	Generator Control Unit
GW	Gross weight
HLAS	Hard Landing Analysis System
HM	Health Management
IDG	Integrated Drive Generator
LRU	Line-replaceable unit
LVDT	Linear Variable Differential Transformer
MEL	Minimum Equipment List
MEMS	Microelectromechanical System
MIMOSA	Machinery Information Management Open Systems Alliance
MLG	Main landing gear
N_2O	Nitrous oxide
NASA	National Aeronautics and Space Administration
NAVAIR	Naval Air Systems Command
NFF	No Fault Found
NLG	Nose landing gear
NPV	Net Present Value

O&S	Operations and support
ODM	Oil Debris Monitoring
OEM	Original Equipment Manufacturer
OSA-CBM	Open System Architecture for Condition-based Maintenance
PDS	Power distribution system
PICAM	Probabilistic IVHM Cost-benefit Analysis Model
PLC	Power line communications
PRSOV	Pressure Regulator and Shutoff Valve
R&R	Removals and repairs
RF	Radio frequency
RFID	Radio Frequency Identification
RTOK	Retest OK
RUL	Remaining Useful Life
RVDT	Rotary Variable Differential Transformer
SAW	Surface acoustic wave
SCV	Starter Control Valve
SHOAM	System Health Operation Analysis Model
SI	Schedule interruption
SME	Subject Matter Expert
SPMS	Sensory Prognostics and Management System
TOA	Time of arrival
TPMS	Tire Pressure Monitoring System
TRL	Technology Readiness Level
USAF	United States Air Force
WIU	Wheel Interface Unit

EXECUTIVE SUMMARY

The SPMS program investigated and developed the capability to perform prognostics, maintenance and installation, and real-time systems evaluations on commercial aircraft. This included gathering and communicating data from the continuous monitoring of aircraft systems, the observation of current system states, and the processing of these data to support maintenance and repair actions. The SPMS program also considered the implementation of faster reaction times, greater diagnostics abilities, and methods to achieve a better understanding of incident precursors and repair and maintenance techniques for the hardware necessary for the use of SPMS capabilities. Finally, the program studied current guidelines, standards, and regulations related to the sensory and communication technologies.

The major accomplishments and findings of the Sensory Prognostics and Management Systems (SPMS) program, generated or substantiated, are as follows:

- Health Management (HM) capabilities consisting of advanced diagnostics, usage-based life-ing, and prognostics that provide maintenance advisories are support, not flight critical, and should generally be partitioned from flight critical elements to reduce cost and increase the flexibility to update and mature these capabilities.

- The concept of progressively maturing HM capabilities to higher levels of certification through use on the aircraft is a cost-effective approach.

- Hardware and software to support HM should be implemented as plug-and-play additions to current Line-replaceable units (LRU) to provide flexibility in its deployment.

- Although desirable, HM hardware does not necessarily have to be more reliable than the subsystem/component it is monitoring.

- Implementing HM as a substitute for hardware redundancy or to automate inspections is a challenging task that is not well-defined.

- Extending the life on the wing of the component based on usage estimates has to prove that the minimal safety margins have not been reduced.

- The role of HM-like functions as a way to monitor for environmental compliance will probably grow. HM is moving from discrete diagnostics to parametric health assessment to parametric capability monitoring.

- A weakness in current HM research is the focus on developing a prognostic for a specific fault mode versus considering all of the major fault modes and required inspections in developing a more comprehensive HM strategy.

- Subsystem/component behavior can change with aircraft age, which will impact the HM capability.

- The effectiveness of wireless communications as an enabling technology is very dependent on a local source of power.

- Supporting HM with energy harvesting generally requires a light weight, local energy storage capability.

- The integration of HM hardware (e.g., sensors, processing, and communications) is not the same as hardware for controls and requires different methods and designs that have not been extensively investigated.

- The ability to trade hardware reliablity rather than virtual reliability that can be implemented via HM is not part of the aerospace deisgn culture and is relatively unexplored territory.

- The HM does not seem to present any major requirement to rethink current certification methods and rules.

- The HM has advanced to the point where it is now seen as a possible competitive advantage in both product sales and support and services. This situation has raised proprietary concerns in regard to data collection and the ownership and use of higher fidelity subsystem data.

The analysis of potential benefit-identified system and subsystem applications will be studied and evaluated in the SPMS program. These applications, the results of the cost-benefit analysis (CBA), and rationale for the CBA for three baseline aircraft will be discussed in this report. The cost-benefit analysis results presented may not accurately reflect what might be experienced in real operations because of the limited scope of the CBA and the complexity of the problem. The CBA results do provide insight into the major factors that contribute to the profitability or lack of it for the applications examined.

The technology areas that should be addressed by development funding, standards, and guidelines to enable more rapid deployment and cost effective implementation of HM include the following:

- Low footprint onboard communication methods, such as wireless and power line communications

- Energy harvesting

- Management of energy resources

- Modular hardware interfaces tailored to HM requirements

- Configuration of local HM nodes for easy installation and maintenance

- High temperature sensing (position, pressure, and current)

- Wireless sensing (e.g., surface acoustic wave)

1. INTRODUCTION.

Historically, diagnostics have been implemented on aircraft primarily to detect system failures and trigger redundancy management, operator displays, or both, to reduce the failure event. Diagnostics refers to the ability to detect a system failure and determine the root cause of that failure, localized to some level of ambiguity in regard to the specific failed component.

Recent advances in sensing technology and the need to reduce support costs have motivated the development of health management (HM) technology. The HM technology comprises the following capabilities:

- Prognostics—Predict the health state or performance level of a line-replaceable unit (LRU) for future usage or wear.

- Usage-Based Life-ing—Estimate the useful life of an LRU based on accumulated usage.

- Advanced Diagnostics—The detection and determination of the root cause of an LRU failure as indicated by a discrete component is extended to reduce ambiguity in the diagnostic and to provide a parametric or gray-scale health assessment or indication of health.

These capabilities lower maintenance costs by reducing troubleshooting and inspections, and provide the basis to 'fix it before it breaks' or predictive maintenance. Predictive maintenance promises to reduce operational delays and enable uninterrupted operations that will motivate investment in HM.

Operators of aircraft expect HM to:

- Increase affordable readiness and availability levels.

- Reduce redundancies (i.e., vehicles, spares, sub-systems, support, crews, and maintainers).

- Provide a competitive discriminator in maintenance operations.

Original Equipment Manufacturers (OEMs) expect that HM will provide the following:

- Competitive discriminator for products
    - Life cycle cost
    - Availability and readiness metrics

- Competitive discriminator for services
    - Leveraging technology and engineering base
    - Operations and Support (O&S) costs
    - Availability and readiness metrics

In addition to the economic impact, HM has safety implications involving adding hardware to the aircraft and the fact that good maintenance supports safe flight.

The Sensory Prognostics and Management Systems (SPMS) program objective is to investigate evolving HM technology and practices to provide insight into questions such as:

- What aircraft systems and subsystems are the main drivers for HM?
- What are the metrics for determining HM payoff?
- What hardware and software are necessary to implement HM?
- What goes onboard vs offboard and what are the trade-offs?
- How does this impact the current avionics architecture for legacy and new aircraft?
- What are the enabling technologies to increase the implementation of HM?
- What are the certification, safety, and standards considerations related to HM and its implementation?

The SPMS program investigated and developed the capability to perform prognostics, maintenance and installation, and real-time systems evaluation on commercial aircraft. This included gathering and communicating data from the continuous monitoring of aircraft systems, the observation of current system states, and the processing of these data to support maintenance and repair actions. The SPMS program studied the feasibility of technologies, such as wireless communication and Radio Frequency Identification (RFID) tags, and the ability of these technologies to meet the certification requirements needed for their implementation into an aircraft environment. The SPMS program also considered the implementation of faster reaction times, greater diagnostics abilities, and methods to achieve a better understanding of incident precursors and repair and maintenance techniques for the hardware necessary for the use of SPMS capabilities. Finally, the program studied current guidelines, standards, and regulations related to the sensory and communication technologies.

This document is the final report for the SPMS program and summarizes the work performed per the program tasks over the last two years, as shown in figure 1. Within previous reports the program tasks and findings were as follows:

- Task 1: Establish Program Plan—Defined the program tasks and schedule and the baseline aircraft to be considered in this study.

- Task 2: Implement SPMS Assessment Methodology—Described the metrics and cost-benefit analysis (CBA) tools.

- Task 3: Identify High-Potential SPMS Applications—Identified an initial list of SPMS applications.

- Task 4: Identify SPMS Requirements and Technologies—Refined this list of SPMS applications and downselected the applications for which application designs were generated.

- Task 5: Design SPMS Configurations—Developed paper hardware and software designs for the selected applications that included required functions, processes, interfaces, and sensors. This also included a system-level architecture for the baseline aircraft.

- Task 6: Evaluate SPMS System Designs—A CBA was performed for the selected applications.

- Task 7: Technology Demonstrations—A demonstration was developed that used a wireless sensor to determine the strain placed on a landing gear.

- Task 8: Develop SPMS Standards and Roadmap—An analysis identified technology gaps and recommended standards and guidelines to facilitate faster adoption and broader application of HM.

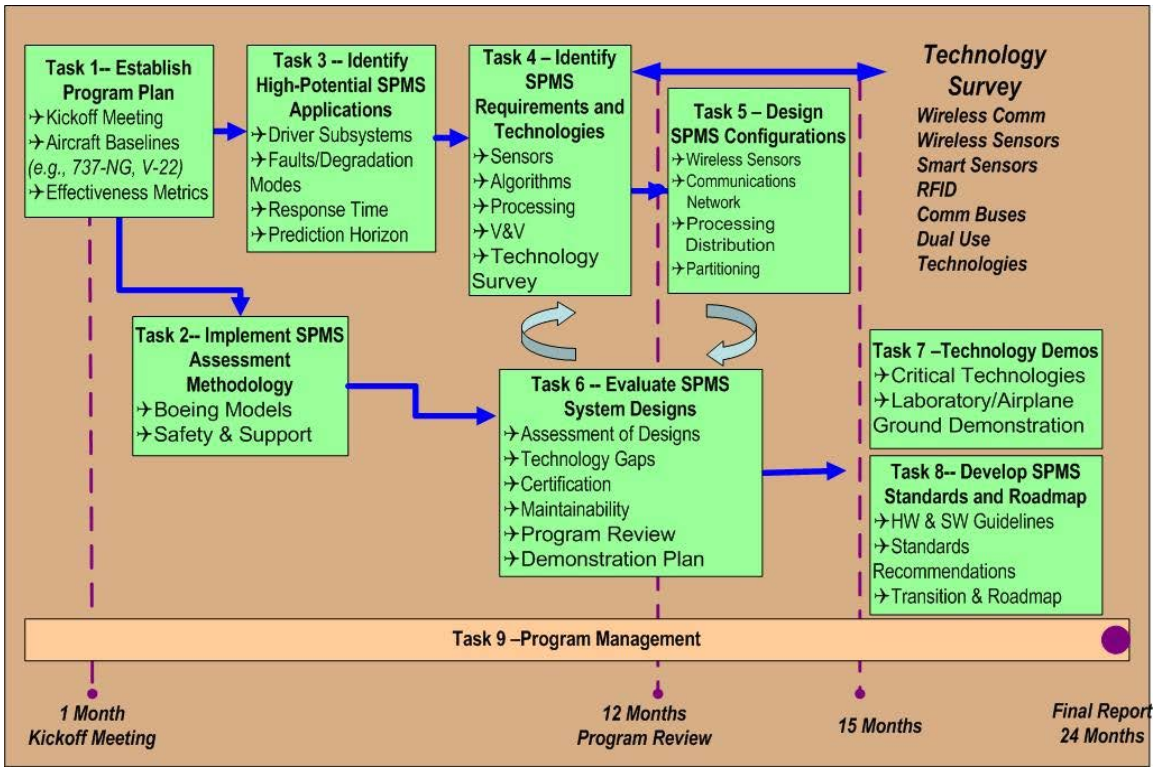

Figure 1. The SPMS Program Plan

While this report attempts to be as complete and comprehensive as possible in addressing the various topics related to HM, proprietary data concerns limit the depth of the descriptions in certain cases. The material contained herein is what could be made available given the circumstances and scope of the program. A proprietary version of this same report was also generated.

2. BASELINE AIRCRAFT AND ARCHITECTURE.

The SPMS study selected a range of commercial aircraft and aircraft fleets to address the sensitivity of HM to fleet size and operations. These aircraft are a shorter-haul, single-aisle Boeing 737-type aircraft, a longer-haul Boeing 777-type aircraft, and a longer-haul, future aircraft known as a Boeing 787+. The selections provided diversity of fleet size, concepts-of-operation, and avionics architecture. The baseline fleet properties are shown in table 1.

Table 1. Baseline Fleet Properties

Aircraft Type	Fleet Size	Average Flight	Number of Flights per Day/Year	Flight Hours in 25 Year Life
Single-Aisle	200	1.9	5/1825	86687
Longer-Haul	50	4.5	2.2/803	90337
Future Longer-Haul	50	4.5	2.2/803	90337

For the purpose of implementing a SPMS top-level design on legacy and new aircraft, the three baseline aircraft are further defined in terms of their ability to support HM.

The following developed baseline aircraft were selected:

- A single-aisle, legacy airplane, of which the Boeing 737 is representative, is assumed that no LRU is capable of data collection or distribution to support HM.

- A double-aisle, legacy baseline airplane with more advanced avionics, of which the Boeing 777 is representative, is assumed that limited LRUs are capable of necessary data collection and distribution. The Boeing team considered the Boeing C-17 and Boeing 777 as a reference in this category due to familiarity with many relevant systems and proprietary data concerns.

- A future aircraft with state-of-the-art avionics, as represented by a Boeing 787+, is assumed to be the most capable of data collection and distribution for HM because there would be designed-in capability not available on the other two baseline airplanes.

In this report, these baselines and architectures are referred to as Dedicated, Hybrid, and Shared, respectively, and represent potential hosts for HM where it is more likely that various elements of HM can be implemented cost effectively. Strapping or, some would say, scabbing-on the hardware and software to implement an HM function after-the-fact on a legacy aircraft and turning a profit is no small achievement.

Each of the architectures has been developed to meet top-level requirements as follows:

- Failure of the SPMS system should not cause any control equipment malfunction. These failures include electronic hardware, software, and communications failures. The result of this requirement is that the SPMS system should not use existing control sensors unless the digital data are made available on an external data bus.

- Data used for Condition-Based Maintenance (CBM) should be highly reliable. The system must warn the user if a data collection failure occurs.

- Data transmission and storage integrity must be maintained (i.e., Cyclic Redundancy Checks (CRC) could be used to ensure integrity).

- The SPMS system should support the aircraft architecture (e.g., two engines, two Cabin Air Controllers (CAC), three generators, two main landing gear, etc.).

- Proprietary data collected should be encrypted before transmission.

- Data collected should be compressed when transmitted or stored.

- The SPMS architecture should be distributed.

- The SPMS architecture should allow the use of wireless sensors.

- The SPMS should have a central computer for data storage, processing, and aircraft offload.

Each SPMS baseline is described in more detail in sections 2.1, 2.2, and 2.3. The applications referenced in the figures are those selected for design in the SPMS program and are described in later sections.

2.1 THE DEDICATED SPMS ARCHITECTURE.

The Dedicated architecture assumes that the relevant data required for a functional SPMS system are not available from the existing aircraft LRUs. Although the existing aircraft might have communication buses, it is assumed that these buses do not have the capacity for the additional prognostic data. Therefore, the Dedicated architecture would require dedicated data collector LRUs, sensors, a communication system, and a central hub for sending data from aircraft to ground specifically for the SPMS system. The Dedicated architecture does not interfere or interface with any of the equipment currently on the baseline aircraft, and because the Dedicated SPMS system architecture stands on its own, the architecture concept can be implemented on all three of the previously mentioned baseline aircraft, as shown in figure 2.

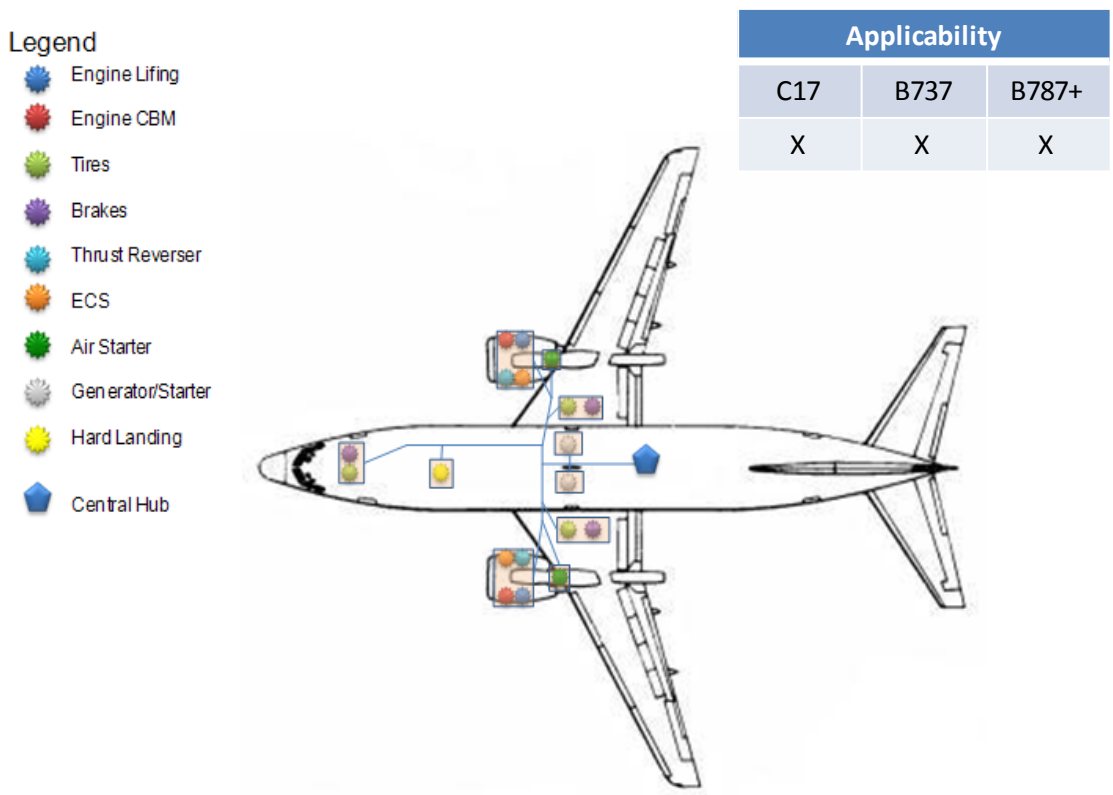

Figure 2. Dedicated SPMS Architecture

The Dedicated architecture is a distributed architecture. Data collector LRUs would be located near their subject LRUs and sensors throughout the aircraft. The information collected would be sent via a communication bus to the central hub for data offloading. Each data collector would be customized for their respective subsystem with the exception of a common platform for computation, power supply, and communication.

2.1.1 Advantages of Dedicated Architecture.

- The existing aircraft LRUs would not require changes or modifications with the Dedicated architecture, thus eliminating the need for recertification or revalidation of any legacy hardware.

- The SPMS LRUs are isolated from LRUs used for control. The architecture ensures that any event within the SPMS system would not negatively affect any aircraft control equipment.

- The SPMS data buses are isolated from the existing aircraft data buses. The architecture ensures that required SPMS system communication is not interrupted or eliminated by legacy aircraft communication or possible modifications to the aircraft that may require use of additional bandwidth, thus minimizing the amount available for the SPMS system.

- Technologies can be selected independently of the existing aircraft and the Dedicated architecture allows for ultimate flexibility. Because there is no requirement to fit into an existing system or architecture, technologies and communication schemas can be selected without concern for legacy aircraft capabilities subject to the constraints of cost and benefit.

- Resolutions can be chosen and collected without regard for current legacy aircraft—although, again, subject to the constraints of cost and benefit.

- Data synchronization can be easily implemented.

2.1.2 Disadvantages of Dedicated Architecture.

- The architecture adds many new LRUs to the aircraft.

- The Dedicated system does not take advantage of any of the current hardware on the aircraft; therefore, all hardware and cabling required for the SPMS would need to be added to the aircraft, increasing its weight and cost.

- Because the Dedicated architecture does not take advantage of any hardware or signals from the legacy aircraft, new sensors, as well as supporting infrastructure (e.g., power and data channels), would need to be added for each of the subsystems, increasing the weight and cost of the aircraft. The location of these sensors would need to be sensitive to certification requirements. Accordingly, it

may not be possible to place them in optimum locations in case they pose a safety risk or a significant certification challenge that would increase costs.

2.2 THE SHARED SPMS ARCHITECTURE.

The Shared architecture assumes that most of the relevant low-speed data and some of the high-speed data required for a functional SPMS system are available from existing LRUs. The Shared architecture also assumes that there is a system-wide aircraft communication bus that can be used for data transmission and monitoring, as well as a central aircraft computer that can collect, collate, and send data from aircraft to the ground. The Shared architecture would use existing aircraft sensors, LRUs, data processing computers, aircraft system computer, and communication systems for the SPMS system. Some of the data required for a functional SPMS system may not be available from some existing LRUs. In these cases, a limited number of new LRUs would need to be developed to collect data not available from existing aircraft LRUs. It may be possible to change the software in some of the existing LRUs to make the required data available. The Shared architecture uses most of the information that is already being captured on the aircraft. As shown in figure 3, of the three baseline aircraft, only the Boeing 787+ is capable of supporting this architecture.

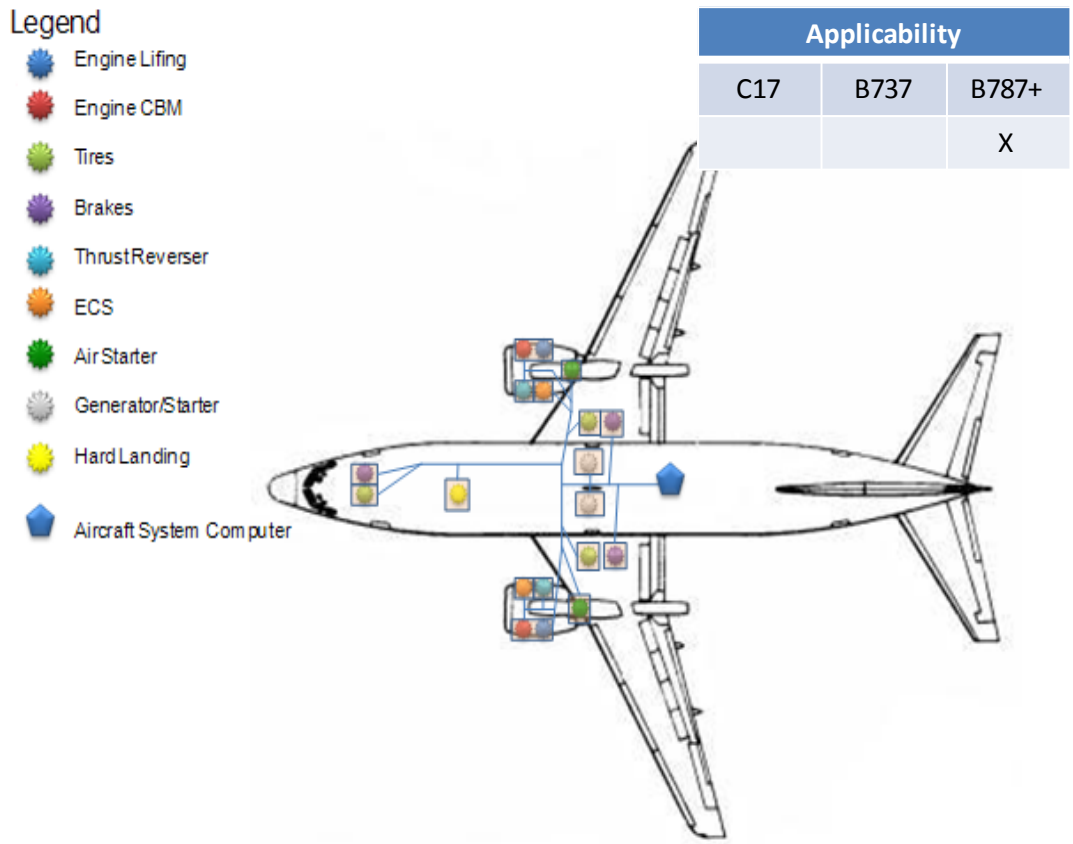

Figure 3. Shared SPMS Architecture

The shared architecture is also a distributed architecture. Existing LRUs are located at various locations around the aircraft. The information collected would then be sent via the current aircraft communication bus to the current aircraft system computer for data offloading.

2.2.1 Advantages of Shared Architecture.

- The Shared architecture does not require a new communication bus. Newer aircraft, such as the Boeing B787, are capable of sending and receiving great quantities of data to and from the system computer. Typically, these communication buses are designed to allow much more room for data transmission than necessary for the current aircraft requirements. This allows the SPMS system to use the additional bandwidth for its purposes. No additional weight is added to the aircraft for SPMS communication.

- The architecture uses most existing aircraft LRUs for collection of data. Minimal additional weight is added for SPMS data collection.

- Shared architecture uses existing central aircraft core computing resources, thus avoiding adding weight to the aircraft. The existing data are validated and verified.

2.2.2 Disadvantages of Shared Architecture.

- Data synchronization across multiple LRUs may be a challenge.

- The central aircraft computer would need upgrading to support SPMS functions, including data encryption and software level isolation.

- The communication bus must prioritize control function communication from SPMS function.

- Existing aircraft LRUs may not collect data at the rate and resolution required for SPMS. This may require software and hardware changes in existing LRUs as shown with the Dedicated architecture. In this advanced platform, it is beneficial to include partitioned processing and communications, as well as the capability to support SPMS-specific sensors. The partitioning would avoid certification concerns and reduce the cost of lower-criticality SPMS functions.

2.3 THE HYBRID SPMS ARCHITECTURE.

As shown in figure 4, the Hybrid SPMS architecture is a combination of the Dedicated and Shared architectures.

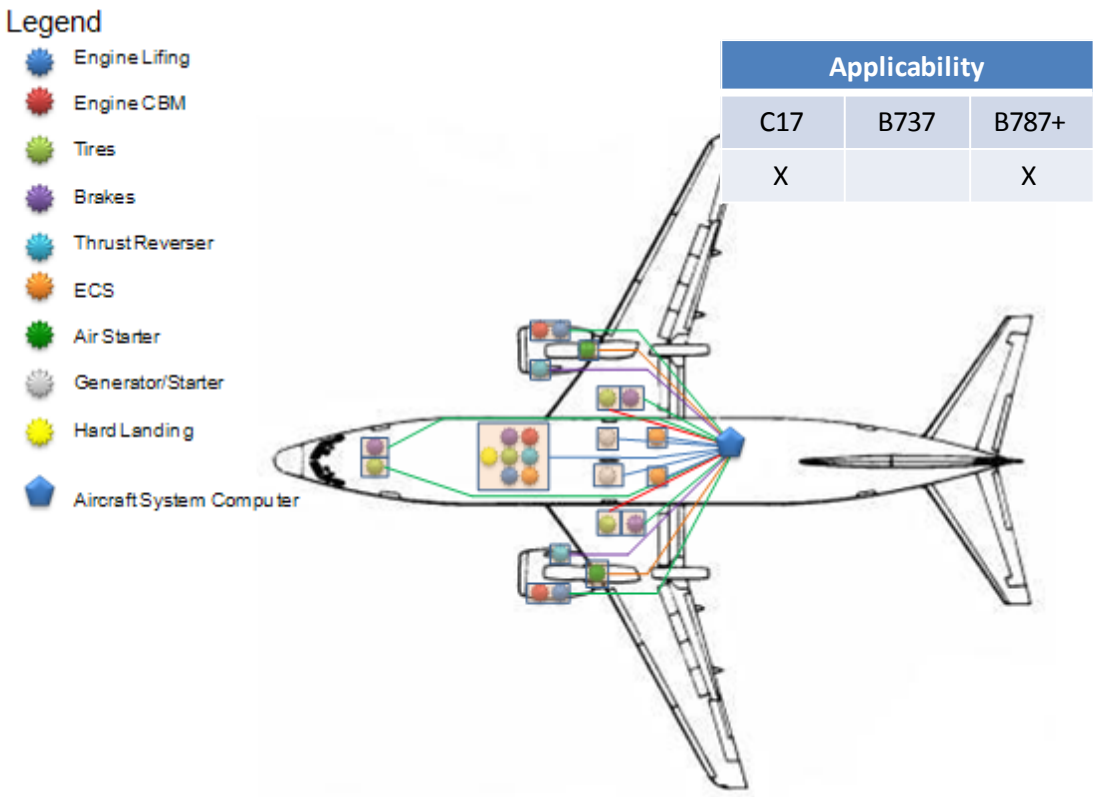

Figure 4. Hybrid SPMS Architecture

The baseline aircraft for this architecture has more usable and available information for the SPMS system than the Dedicated Boeing B737, but not as much as the Shared Boeing B787+. The architecture assumes that there are some relevant data available from some existing LRUs, that there are multiple aircraft communication buses that can be used for data transmission and monitoring, and that there may or may not be a central aircraft computer that can collect, collate, and offload data. The architecture would use both existing and new sensors, LRUs, data processing computers, and communication buses based on SPMS needs and aircraft capabilities. It would also need a Dedicated aircraft system computer for data collection and offloading. The custom LRUs would have the same architecture as the Dedicated LRUs because they would require their own data bus for communication between the LRUs and the aircraft system computer. Because this architecture uses some components and information from the existing aircraft, this architecture concept could only be implemented on the Boeing 777/C-17 and B787+ baseline aircraft.

The Hybrid architecture is a distributed architecture. Existing and custom LRUs would be located at various locations throughout the aircraft. The information collected would be sent via multiple communication buses to the aircraft system computer for data offloading. Required custom LRUs would have a common platform for computation, power supply, and communication.

The advantages and disadvantages of the Hybrid system are roughly a combination of the advantages and disadvantages of the Shared and Dedicated architectures. Each system will have to be examined to see if it adequately supports the SPMS requirements. There is significant risk since the data available may not be at the desired rate or resolution. This may create a trade-off in using available data as is, or augmenting the LRU to achieve the desired level of performance. Examination of the available data is required, as it is not an uncommon occurrence in legacy systems to have some inconsistency or delay in writing data to the bus, which can affect the performance of SPMS algorithms.

3. THE SPMS EFFECTIVENESS METRICS.

The key element of the Boeing team assessment methodology, and the driver for the subsequent analysis and design tasks is the identification of the ways that the SPMS technology can impact current and future aircraft operations. These relationships organize the approach when identifying SPMS capabilities and technologies as well as in determining benefit. In this regard, Boeing used the following SPMS impact areas:

- Operational availability and reliability
- Maintenance cost
- Logistics cost
- Performance (including ensuring “green” operation)
- Airspace throughput
- Safety

Further description of these metrics and the factors that influence them are provided in table 2.

The main focus of the SPMS program is the contribution of HM technology to improve operational availability and reliability and to reduce maintenance and logistics costs. These benefits were converted to dollar value to compare operating the same fleet with and without HM. The impact of HM on the remaining metrics were qualitatively noted in various application descriptions but not quantified.

Table 2. Metrics to Consider and Their Influencing Factors

Metrics	Factors Influencing the Metric	Covered by the Factor for the Metric
Operational Availability/Use and Schedule Reliability	Unscheduled Maintenance and Repair	Down time to perform the maintenance, given that all equipment and resources are available to do the task.
	Scheduled Maintenance and Inspection	Down time to perform scheduled inspections to prevent in-flight failures.
	Opportunistic Maintenance	Maintenance events that are scheduled at convenient down times based on health status.
Maintenance Cost	Removals and Repairs	Inappropriate removal and repairs due to root cause misdiagnoses or shotgun maintenance.
	No Fault Found (NFF) and False Alarms	In-flight indications not showing the failures at vehicle or subsequent tests at repair facilities.
	Troubleshooting Incidents and Duration	In-flight or off-board tests indicating faults but requiring extensive effort, support equipment, and maintenance personnel to isolate the faults to the proper system levels.
	System Checkout (SC) Incidents and Duration	Maintenance phase to validate the parts' repairs or replacements.
	Scheduled Maintenance and Inspection	Frequency of inspections and the maintenance effort, time, and equipment to perform inspections, intended to prevent in-flight failures.
Logistics Cost	Removals and Repairs	Spare parts or materials expended for no valid reason (or from root cause misdiagnosis or shotgun maintenance) and sent to repair facilities.
	Condemnation Costs on Systems, Subsystems, and Components	Run-to-failure maintenance strategies causing components to fail catastrophically, damaging more than just the failed component.
	Spares Provisioning	Predicting spares impacting inventory costs, such as just-in-time spares inventory, provision spares, and associated support equipment to handle spares.
	Maintenance Concept	Accuracy of diagnosis and prognosis impacting the maintenance operations, such as using a two-level maintenance concept and avoiding widespread provisioning of spares and repair equipment and facilities.
Performance (including ensuring "green" operation)	Redundancy	Redundancy of structure material and in-system (e.g., channels of flight control or number of generators) impacts weight, thus impacts fuel consumption. Usage-based life-ing and prognostics can impact the redundancy, but come with challenging validation requirements.
	Weight	Takeoff weight impacts the fuel consumption.
	Crew Size	Salary and benefits of crew size may be impacted due to any automatic backups.

Table 2. Metrics to Consider and Their Influencing Factors (continued)

Metrics	Factors Influencing the Metric	Covered by the Factor for the Metric
Air Space Throughput	Use of Limited Facilities in Airports	Appropriate navigation, flight control, and communication capability may sustain precise operation in more congested air traffic situations. Prediction of maintenance requirements can reduce and streamline operations including enabling sparse allocation of support resources at selected air facilities.
Safety	Crew Decisions in Emergency Situations	The SPMS monitoring may support damage and capability assessment for events such as lightning strikes that impact the function of aircraft systems. The synergy between monitoring for such events and SPMS should be shared to provide a greater capability at a lower cost.
	Real-Time Fleet Awareness on Environmental Conditions	Detection or recognition of adverse conditions can be automatically communicated to aircraft in the area.
	Assurance of Timely and Accurate Maintenance	Proper maintenance of an aircraft promotes safe operation. The SPMS monitoring can contribute to awareness of aircraft health state, which may avoid incidents related to such phenomena as improper maintenance practices.

4. IDENTIFICATION OF HIGH-POTENTIAL SPMS APPLICATIONS.

Initial SPMS target systems were generated based on analysis of data from the Boeing data system and also from the Boeing team's (Hamilton Sundstrand, Scientific Monitoring, and Teledyne) knowledge of subsystem reliability, maintenance problems, and evolving SPMS technologies and capabilities.

The objective of the initial application selection and definition was to identify these systems and to provide sufficient information in each area to downselect to a reduced set of specific applications. This reduced set of applications was to be high payoff and the application implementations would present challenges that would drive the need for technologies and designs at the overall system level.

Eleven system areas were identified based on the following criteria:

1. The system area is known to rank high in regard to its impact on availability, schedule interruption, or maintenance costs based on Boeing 737 and 777 maintenance data.

2. Experienced maintenance personnel recommended the system area and provided supporting rationale.

3. Based on expert opinion, the system area would benefit from an SPMS capability that would significantly change commercial aircraft maintenance procedures for legacy, current, and next generation aircraft.

The analysis provided the characteristics of an SPMS application that would drive technologies enabling common approaches or architectures to implement SPMS. An

example of this would be the monitoring of electrical power and wiring within the power distribution system (PDS).

The eleven system areas were identified and examined from the perspective of reliability and maintenance problems and in terms of the potential effectiveness of SPMS technologies (see appendix A).

As shown in figure 5, from these eleven system areas, nine specific application areas were selected.

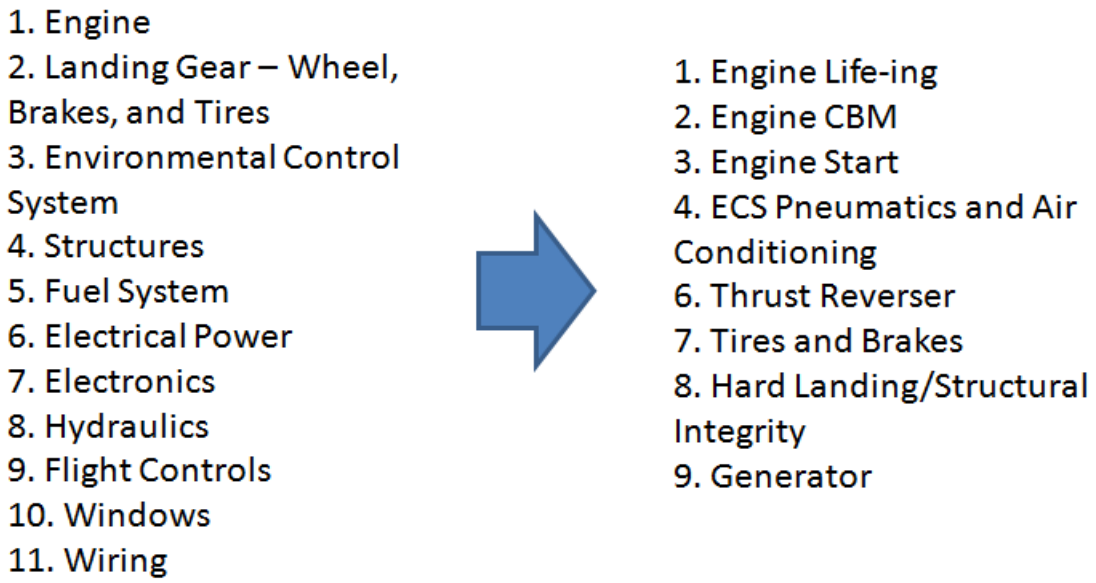

Figure 5. Downselection of SPMS Application Areas

The basis for the downselect was (1) the potential impact of SPMS technology on individual areas; (2) a sufficient number and diversity of applications to necessitate system level architectural trades; and (3) to remain within the scope of program resources.

For the nine selected application areas, additional requirements were defined and designs generated and evaluated.

5. THE SPMS DEFINITION AND SYSTEM DESIGN.

With the nine application areas, the SPMS system was created by refining functional requirements and generating designs for each application and the overall system. The objective was to create the greatest value for each application for each baseline while considering the overall system architecture where processing and communications resources are shared.

The application descriptions consist of functional requirements and sensor and control data inputs, with data acquisition rates and descriptions of the HM function. A schematic

and a description of the overall system architecture to integrate and support the various applications were also included.

There is an element of each baseline architecture in each platform for a given application area. For each application, the choices are to strap on the necessary data acquisition, processing, and communications for full functionality (Dedicated), to use the resources the aircraft has available (Shared), or adopt some middle ground that both straps on some capability and leverages existing resources (Hybrid). The Shared approach is more attractive for the advanced baseline. In many cases, the difference between the Dedicated and Shared system will be the cost of adding on the capability after the fact versus including the capability during the design. The gain of this effort for the advanced aircraft is in knowing what resources are needed to support a full and beneficial HM system.

5.1 THE HEALTH MANAGEMENT DESIGN CONSIDERATIONS.

Before the application and system designs can be discussed, background on HM design considerations is needed. This section includes information on cost factors regarding the integration of HM into the aircraft and structure of HM systems.

5.1.1 Cost Factors.

To guide the design process toward affordable solutions, a matrix was created to summarize the major cost factors and challenges in creating an HM system. Major cost factors include:

- Minimize addition of communications wiring
- Minimize addition of power wiring
- Minimize addition of circuit breakers
- Minimize weight of added hardware, excluding wiring
- Minimize uncertified components/system
- Minimize new hardware qualification
- Minimize the number of additional part numbers
- Utilize high Technology Readiness Level (TRL)/proven technologies
- Maximize multi-use components
- Minimize power consumption
- Minimize thermal load
- Minimize hardware volume
- Minimize additional dedicated sensors
- Minimize reliability impact
- Minimize maintainability impact
- Minimize impact to existing interfaces (buses, protocols, etc.)
- Minimize processing requirements

- Minimize flight deck impact
- Minimize support equipment
- Minimize training requirements
- Minimize drawing changes

The weighting for each of these factors in a design trade would vary by application need and situation. However, this list forms a good basis for monitoring and guiding design decisions.

5.1.2 The SPMS Market Share.

Operators want reliable platforms to accomplish business goals. When considering the HM discussion there are five options, which can be combined, for achieving reliable operation:

1. Create a reliable system so that failure during operation is a rare event.

2. Build in redundancy to avoid the consequences of one or more failures during operation.

3. Make the platform maintainable to minimize any platform downtime in the event of a failure.

4. Implement inspections to avoid failures and the resulting asset downtime.

5. Implement prognostics or life-ing to predict and avoid unanticipated failures and the resulting asset downtime.

Current practice favors option 1 as the course of action. The subsystems/LRUs in fielded platforms typically undergo upgrades to increase reliability or address known performance problems. As the upgrades are made to the subsystem, performance and reliability will typically stabilize to an acceptable level. As a result, upgrades become less frequent.

In comparison with the other alternatives, the redesign approach is typically the path of choice because it is a known and perceived to be lower risk. The redesign approach seeks to keep the impact of the design change to a minimum so to manage risk and certification costs. A major disadvantage of this design upgrade is that it does not eliminate in-operation failures. They occur, but at a reduced rate.

Options 2 and 3 add hardware or incur downtime and are seldom competitive as a solution for fielded systems in the aircraft field.

Option 4 adds maintenance cost and time and is not applicable in many cases where it is not easy to inspect for the impending fault.

Option 5 solves the problem of reducing unanticipated failures. The downside to this approach is the cost (both recurring and non-recurring) of additional hardware required, the reliability of this hardware and, in most cases, the risk associated with technology. In regard to the reliability of the monitoring hardware, one can leverage the prediction horizon of the prognostic such that failure of the monitoring hardware would not cause an operational delay and can be repaired with no impact on operational readiness. It is assumed that the prognostic or life-ing function would have a prediction horizon that would permit the system being monitored to be operated for a length of time with a low probability of failure. This repair does require additional support resources, such as maintenance hours, spares, and logistics costs.

If the objective is to improve the operational reliability of a platform, there is a competition between upgrading the system and subsystem by improving the reliability of the components, or by implementing prognostics/life-ing to avoid operational failures by predicting remaining useful life (RUL). The benefits, risks, and costs of these two approaches are shown in table 3.

Table 3. Costs and Benefits of Prognostics and Usage-Based Life-ing vs. Upgrades to Improve LRU Reliability

Approach	Costs	Benefits
Achieve greater reliability through a design change	• Design change • Additional hardware or software • Parts condemnation • Risk of new technology • Certification	• Reduction in frequency of failure, thus reduction in the number of unanticipated failures.
Prognostics/Life-ing to predict RUL thus providing virtual reliability	• HM system and infrastructure hardware and software • Integration of HM system onto the platform • Maintenance of HM system • RUL of system/subsystem that was not used • Risk of new technology • Certification	• Reduction in the number of unanticipated failures • Avoidance of parts condemnation

The decision comes down to cost and the degree in which the prognostic/life-ing system can reduce the number of unanticipated failures versus the improved reliability approach. The drivers for the prognostics/life-ing approach are the reliability of the HM hardware, implementation cost, and performance (e.g., predicting end-of-life, tolerance-to-failure,

and missed data) and avoidance of part condemnation costs associated with run-to-failure in the improved reliability approach.

The reliability of the HM hardware may not be a significant factor in the decision regarding support-critical HM applications. Typically aircraft availability drives the CBA. If the HM application has significant impact on reducing unanticipated delays of an expensive capital asset, the maintenance cost associated with the HM hardware would be insignificant. The impact on the effectiveness of the HM application is minimized if maintenance is performed within the prediction horizon.

An alternative would involve multiple strategies. The HM could play a synergistic role to ensure (virtual) reliability. Conditions may warrant implementing prognostics or life-ing as a hedge against customer dissatisfaction early in the life of a new product, when unexpected failures may occur at an unacceptable rate (see section 5.1.6). An integrated approach to subsystem and total aircraft design would be to flow down requirements for operational readiness rather than reliability that could be met with a combination of strategies, including HM.

5.1.3 The Health Management Maturation.

It is generally cost-prohibitive to generate data that characterize degradation on a full range of faults for subsystems, especially for those that have multiple major components. Model-based approaches help address this challenge but, until more is known about such models, HM systems would be matured to some extent in the field. This would require a period of data collection to characterize component degradation at the desired level. The required data for development of HM systems would vary by application and technical approach. Capturing the raw input data from the sensor or control system at various points in the degradation history addresses this concern. The data could be compressed to reduce the communication load. The amount of data might also be reduced if the application is based on certain features that are extracted and known to be stable. For example, if a vibration analysis is based on fast Fourier transforms (FFT) of accelerometer data and the frequency band and resolution of these transforms are known to appropriately represent the problem, then maturation could be based on the collection of this feature data. In comparison to the raw sensor, the FFTs greatly reduce the data collection and handling needed for maturation. The maturation requirement, which is complicated by the certification of software, would influence the decision to locate HM functionality either onboard or offboard. Locating the HM processing offboard would increase the bandwidth of the data download, which would raise download costs and could lower the value of the HM output by delaying maintenance or logistics actions that could reduce ground delay time.

5.1.4 Extracting Data From Existing Subsystem Controllers.

The biggest single opportunity, yet barrier, to the implementation of HM on legacy platforms is the accessibility of data from existing flight-critical controllers. Prime examples of these are engine and flight controls. These controllers typically execute a 50Hz (engines) or 100Hz (flight control) control loop, but they output data at a much

lower rate (5 Hz) primarily because, at the time of the aircraft design, the potential need for higher data rate was not recognized.

The data output is for crew displays or data recording, which is often a remnant from previous flight testing. Originally, there was no requirement to provide higher rate data, and accessing the data on a legacy system required an update to the controller software, if not hardware, which would incur costs beyond the benefit offered by the HM application. It is more cost-effective to implement a parallel system than to extract data from the controller. For future upgrades or implementations of these controllers, an HM interface similar to a factory test connector, but optically isolated to access key data streams, for HM needs to be provided. This approach would reduce certification concerns. There is no assurance that future avionics designs will address this beneficial capability, despite advances in technology such as time and space partitioning of processing and communications.

5.1.5 Implementation Flexibility.

Along the same theme as leveraging system upgrades, it would benefit HM applications if the required hardware and software could be packaged in a kit that could be easily added or removed as a maintenance action. Reliability problems are seldom anticipated in the design phase, thus the business case during design for adding HM is weak given what are often optimistic estimations. After the subsystem is implemented and problems arise there is opportunity to monitor the system to determine or—in some cases—anticipate problems. A plug-and-play HM node with a range of sensing capabilities could be a solution to verifying the integrity of key components over extended periods of operation. Such health nodes could be put on a few units. If the subsystem or component-of-interest performs well, the monitoring units could be removed. If not, the monitoring units can provide health status and predictive maintenance to ensure virtual reliability. The communication of data from these HM nodes would have to be accomplished by configurable media, such as wireless, communications over existing power lines via a PDS or manual collection of data during maintenance.

5.1.6 Exploiting Estimates of RUL.

The major advantage of being able to predict the RUL of a component or subsystem is to avoid unanticipated maintenance and schedule interruptions. For individual aircraft, this requires concentrated probability distribution so not to incur more cost by removing a component too early and, thus, lose the benefit over the remaining life, which may be extensive. However, advanced maintenance systems may use this information to order and allocate spares. When considered over the fleet or operational site, the RUL estimates, either usage-based or condition-based, can pay off in terms of supporting a more intelligent management of the supply chain. It may be wise to introduce some HM applications in this role to build confidence.

5.1.7 Handling of Subsystem Data.

Advanced HM capabilities are typically based on higher fidelity data found in subsystem controllers or sensors installed specifically to support the subject capability. Subsystem OEMs are concerned about uncontrolled collection and distribution of data that can be used to reverse engineer design features of the subsystem or component and see these data as proprietary. The data may also be useful in providing support services to the platform end user. More importantly, such concerns can drive the need for encryption of these data to control its distribution and use. Such encryption may be required at any or all levels of the processing chain, further adding to the complexity of communicating and storing the HM data.

5.1.8 Certification Approaches for SPMS Designs.

The HM has the opportunity to make use of the SPMS technologies studied as part of this project to not only modify maintenance practices, but also to intervene in maintenance and operations. To achieve this level of capability, an SPMS installation would require a higher degree of qualification that is commensurate with the criticality defined by the most severe effect on the airplane of those intervention actions. Some possible approaches that could be employed for airworthiness approval of an SPMS system are discussed in Advisory Circular AC 29-2C Change 1, Miscellaneous Guidance 15, Airworthiness Approval of Rotorcraft Health Usage Monitoring Systems (HUMS).
The discussion in the sections below focus on the three basic requirements for certification as described in AC 29-2C:

1. Equipment installation and qualification (both airborne and ground)
2. Credit validation activities
3. Instructions for continued airworthiness

5.1.8.1 A Study of Two Certification Cases.

This section discusses two specific certification cases—one that does not find common use in other applications, and one that would be considered similar to the HUMS certification approach. The first is the handling of higher-criticality data by support-critical systems and the second is the elevation of Minor/non-hazard SPMS components to flight-critical status after establishing its performance and integrity over a period of time. Both of these approaches would require extensive advance coordination and buy-in from the Federal Aviation Administration (FAA).

Support-critical SPMS functions and components (e.g., sensors and data concentrators) are considered Minor or No-Effect criticality, and the onboard software is typically certified to DO-178B Level D, which establishes that the SPMS hardware and software is not a hazard to flight.

SPMS ground-based and onboard installations that run HM algorithms must be certified to the same level as the end-to-end criticality established in a Fault Hazard Analysis (FHA). These results are commensurate with the potential hazardous effects of using the

application's results. The software and hardware installation certification would be done using, for example, the guidelines established in DO-178B [1] (onboard) and DO-278 [2] (ground-based, Commercial off-the-Shelf (COTS)) standards.

5.1.8.1.1 Handling of Hazardous/Severe Criticality Data by Non-Criticality-Certified System.

In some cases, it would be desirable and economically advantageous to process safety-critical functions without certifying each element in the end-to-end thread from sensor to decision maker to the FHA-established criticality level. This section describes an approach to doing this.

Data would be collected by hardware and software elements certified to the integrity of the safety-critical level and would be transmitted to a ground flight-critical certified element using non-critical, Level D, SPMS elements as a pipeline function only. These SPMS elements would communicate the data after it was encoded with a CRC and/or other error detection schemes. The receiving application, which processes the HM data for the critical system would be certified at the appropriate level, and would use the CRC encoding to ensure the integrity of the received data. Figure 6 shows a block diagram of a representative system using this technique.

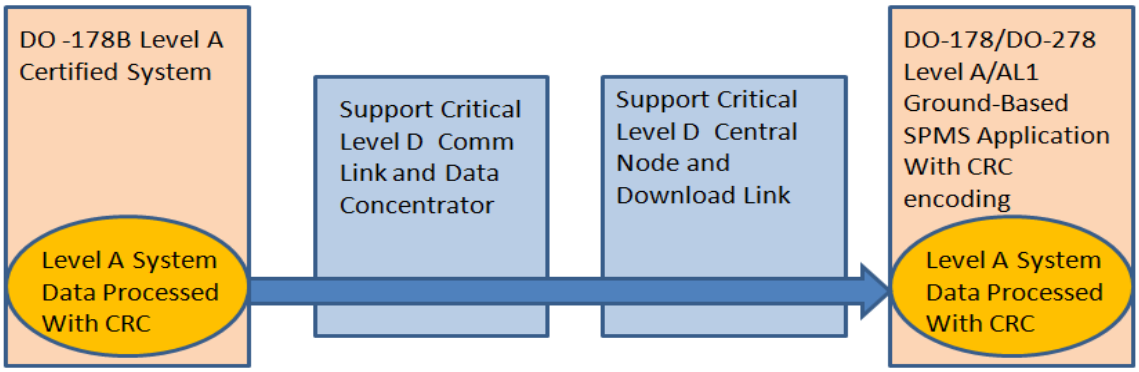

Figure 6. Representative Handling Critical Data Within SPMS

5.1.8.1.2 Special Considerations of This Certification Case.

The end-to-end performance criteria of the SPMS data include accuracy, timing/sampling, resolution, feature recognition, and consistency. The CRC and other data assurance methods would guarantee data accuracy, but there could be a loss of data, for example, if the lower-criticality system were down for a time and were not required as part of a minimum equipment list (MEL). In addition to the validation of the SPMS application, the Level D system as a pipeline would require a well-understood effect of data loss, for example, from the lower-criticality system for a particular period of time, and how that data loss affected the results. *Instructions for Continued Airworthiness* would require that procedures were put into place for that missing data.

5.1.8.1.3 Raising Criticality of Lower-Level Certification.

The HM diagnostic, usage-based life-ing, and prognostics include evolving technologies where performance has not been generally established. The cost of seeded and run-to-failure tests to establish the integrity of these systems is prohibitive. However, these methods can be implemented and developed as support-critical (Level D) and have value to reduce maintenance costs and schedule interruptions. A controlled introduction-to-service might be required where it is not cost effective to create the significant data required to be certified at a higher level of criticality via the above means. The initial certification that was performed at the lower-criticality level could be raised by the FAA through synthesis and reevaluation. Synthesis is the process of evaluating the historical performance and other relevant data with the objective of validating and, where necessary, refining the performance for an approved credit. Certification of an SPMS application to a higher level can leverage and range of inputs of the method, which can be recorded and analyzed. This requires that the application hardware be implemented to the highest level of certification anticipated. Specific approaches to certification of the SPMS applications are provided in individual application sections.

6. INTRODUCTION TO SPMS APPLICATIONS.

The HM is considered hierarchical because failures and degradations occur at the material level and the effects propagate up and across to impact subsystem and system level functions. To organize the structure of the system design, the following terminology is used:

- Central node—A hardware processing capability that performs vehicle level HM integration and manages downloads from the aircraft.

- Area node—A second level processing capability that performs system and subsystem HM integration and manages communications to the central node and to lower level local nodes.

- Local node—A third level processing capability that primarily interfaces with sensors. A local node can be a smart sensor.

Communication links among nodes are distinguished by labeled arrows between the nodes. A sensor can provide input to any node. Area and local nodes are data concentrators with processing, storage, and interfaces to support the implementation of the node functionality. The functions resident in the various nodes are described and labeled as to the type of algorithm, using the notations below:

- Physics or Data Driven Models (M)
- Transforms (e.g., FFTs) (T)
- Filters (e.g., Notch, Kalman, and Particle Filters) (F)
- Arithmetic/Small Model (arithmetic and logical) (SM)

- Large Logical Constructs/Reasoner (e.g., Model-based Diagnostic Reasoners at the Management Level) (LM)

The application descriptions are biased toward putting functions onboard the aircraft. In terms of the Open System Architecture for Condition-Based Maintenance (OSA-CBM) software hierarchy, health indicators that support prognostics are generated onboard for the purpose of the application description. Listed below are two examples behind this reasoning:

1. This information is valuable for supporting diagnostics because it reduces ambiguity, the size of the data download that might be done in-flight, and enables ground support systems to respond more quickly, thus reducing delay time.

2. Processing capability is inexpensive in regard to size, weight, and power. Given that there is an SPMS central node to support HM, it is relatively inexpensive to implement a level of capability to address all the needs of the HM system.

6.1 ENGINE LIFE-ING APPLICATION REQUIREMENTS AND DESCRIPTION, DESIGNS, COST-BENEFIT ANALYSIS, AND CERTIFICATION CONSIDERATIONS.

6.1.1 Engine Life-ing Application Requirements and Description.

The engine life-ing application requirements would be relatively uniform across legacy and advanced aircraft. The life-ing application requires the collection and downloading of a large set of data corresponding to each flight and the processing of these data in a ground-based system. The data could be processed onboard but the ground-based option has the advantage of supporting the storage of the data, thus enabling “relife-ing” of the engines if necessary. The application is safety-critical, which would require the integrity of the data to be maintained to get the maximum benefit from the application.

Turbine engines are removed and overhauled, based on the number of cycles (take-offs and landings) the engine has experienced. The overhaul checks the integrity of the turbine disks to ensure that no uncontained failure of the engine occurs. It has been shown that cycle counting-based life-ing can be a conservative estimate of engine life. Current research shows that remaining life estimates can be based on models of actual stress on engine components, provided that data on engine speed, temperature, and pressure data are available.

Such model-based usage methods require access to continuous streaming data on engine temperatures, pressures, and speeds, which are input into high fidelity models of engine stress. The receiving, handling, and archiving of these large sets of streaming data are required, as is consistent data collection. Some platforms collect limited amounts of the required parameters, but do not do so continuously. Alternatively, life-ing models could be implemented onboard. Such implementation would require significant onboard

processing power and would complicate the calibration or recalibration of the life-ing methods since the source data would not be available for off-board analysis.

Recommended Approach and Performance: (1) The life-ing method would have the same, or higher, level of confidence as the current cycle-counting methods to preclude uncontained engine failure and significantly extend the average engine life, (2) the point of significant return would depend on the specific application, but a gain >5% in average life-on-wing would provide a significant cost reduction, and (3) the life-ing algorithms should be run offboard, requiring streaming data to be collected and downloaded from the aircraft.

6.1.2 Engine Life-ing Design.

The objective of the application is to develop a more accurate approach to measuring the life of life-limited engine components. Current methods for estimating engine component life are conservative because of their lack of sensitivity to factors that impact life usage. Thus, a model-based approach is suggested that would effectively extend life by more accurately estimating component life. A more accurate estimation reduces the uncertainty associated with life-ing, which concentrates the probability of failure distribution—thus, effectively extending the average component life.

The concept of model-based life-ing bases the life of engine life-limited components on stress calculations generated from a model of the engine using dynamic engine run-time parameters as input. This would replace the use of operational modes such as cycle counting to predict life.

Domain experts estimate that model-based engine life-ing would likely enable more life, depending on its use and operating environment, for life-limited parts in a commercial engine. This estimate is based on dependability of the models that calculate stress on various components in the model-based approach. The higher the resolution, the more accurate the fatigue models for life-limited parts and the more gain that can be realized.

The desired parameters to support engine life-ing include:

- Burner Pressure
- Low Rotor Speed N1
- High Rotor Speed N2
- Exhaust Gas Temperature
- Burn Flow
- Throttle Lever Angle
- Fan Inlet Pressure
- Fuel Temperature
- Exhaust Gas Pressure
- Stator Vane Actuator Position

- Stage Temperature
- Stage Bleed Actuator Position
- Oil Temperature
- Oil Pressure
- Oil Quantity
- Total Fuel Flow
- Burn Flow Command
- Low Pressure Turbine Air Cooling Control Position Feedback
- HPT ACC Position Feedback
- Ambient Pressure
- Actual Engine Pressure Ratio
- EPR Command
- Temperature (T2) Sensor
- N1 Control Command

These data would be collected any time the engine is in operation at a rate equal to or greater than 5Hz.

6.1.2.1 Design Trades and Recommended Designs.

A major benefit of engine life-ing is an increase in the average time-on-wing for an engine. Each percentage point gain in time-on-wing returns dividends by reducing engine overhauls by approximately an equivalent amount.

6.1.2.1.1 Dedicated and Hybrid Design.

In the Shared and Hybrid vehicles, the above parameters are generally accessible from the Electronic Engine Controller (EEC) at a rate of 5 Hz or greater. These data are available in the EEC at the iteration rate of engine control (usually 50 Hz), but are output onto a bus from the EEC at a much lower rate. In such cases, if it is desirable or necessary to acquire the data at a higher rate, the EEC software would have to be modified. Also, the communication of the data to a Central Health Node may also require additional bus throughput. Stand-alone modification of the EEC software for this application is considered prohibitively expensive. If the EEC software is updated for some other reason, additional changes to better support engine life-ing could be opportunistically pursued. A schematic of the Dedicated and Hybrid design is shown in figure 7.

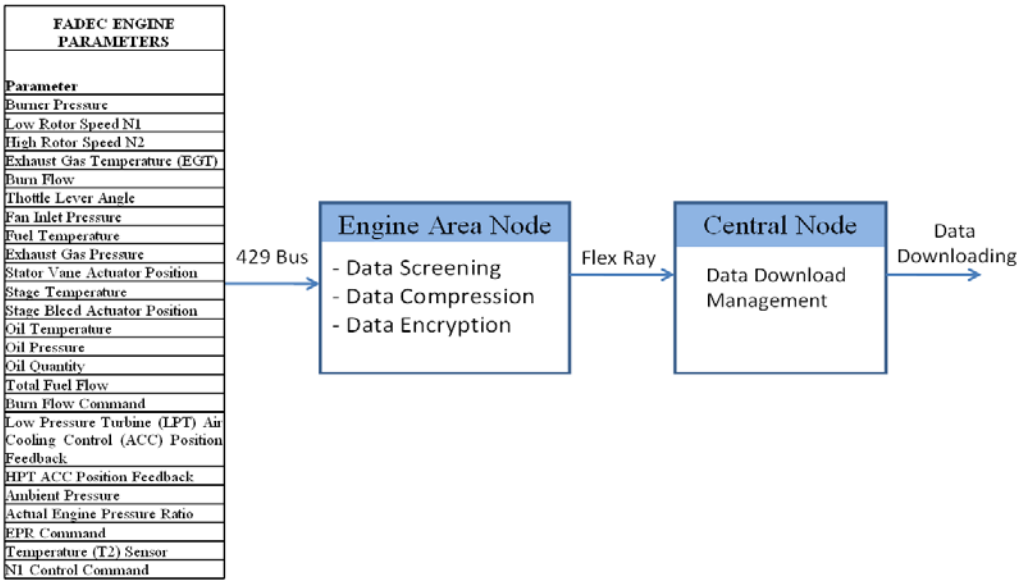

Figure 7. Engine Life-ing

The engine parameters would be acquired by tapping into an existing data bus and routing this to the onboard Central Health Node where the data set is downloaded using the media available. This application would have very little impact on aircraft hardware other than storage and download requirements.

The functions in the Engine Area Node would be the Data Screening (F), Data Compression (F), and Data Encryption (F).

6.1.2.1.2 Shared System.

The Shared system design would be similar to the Dedicated and Hybrid systems, except that the data could be captured at a faster rate with existing hardware and capabilities.

6.1.2.2 Application Assessment.

It would be beneficial to better understand the effectiveness of this application as a function of the sampling rate of the available data.

Inconsistent downloading of data could impact the effectiveness of the application because worst-case operation would be substituted for known aging of life-limited parts. The storage required for one or two flights of data is a moderate to low cost factor given the existence of a Central Health Node.

6.1.3 Engine Life-ing Cost-Benefit Analysis.

The CBA in this and previous application sections are based on cost-benefit modeling and analysis methodology (described in section 8). The engine life-ing technology—which is the basis for a more analytical model-based life-ing of turbine engine

components as opposed to the existing cycle counting—was developed through several programs sponsored by the Defense Advanced Research Projects Agency and the United States Air Force. These programs funded efforts by engine manufacturers to develop such life-ing methods as well as engine CBM technologies. The engine life-ing technology has been particularly useful for application to legacy fleets since its implementation may not require any additional sensing hardware. The engine control parameters that are typically available on many platform avionics buses will support such model-based life-ing to varying degrees of dependability.

Unfortunately, searches for published information did not provide estimates of predicted gain in realized life. The phrase 'realized life' is used rather than 'extended life' because the life of the component or system is not extended, rather the allowable use of the component or system is extended because of a more accurate, less conservative measure of life is used.

What is not known for the purpose of this report is how performance degrades with sampling rate and with the variation of sensors within the engine. Variation in sensor placement can be offset by models to interpolate temperatures and pressures across the engine.

Another variable is the operation of the aircraft. Aircraft with a more benign operating profile are thought to benefit less because the consistency of operation is more in line with the cycle counting life-ing method. Thus, the model-based approach and cycle counting would be more likely to produce similar results.

Given the above, the estimate for the effectiveness of the model-based life-ing was based on the following:

- It was assumed that the potential benefit must be in the range of at least 10-20% gain in life-on-wing for military vehicles.

- Commercial vehicles have more benign flight operations, so the potential benefit was degraded to 3-5% gain in realized life (depending on the quality of the data available).

The application benefit is the value of the increased average realized engine life taking this percentage times the average cost of maintaining the engine over its life, which can be estimated at $10 million to $20 million.

6.1.3.1 Engine Life-ing Results for Dedicated Aircraft.

For the Dedicated aircraft, the gain is reduced based on the quality of data. A small weight penalty is included for accessing the bus data. Development costs are assessed to implement the offboard life-ing applications as well as a small implementation cost associated with tapping a data bus to acquire the data. No cost was assigned for the engine data concentrator since it is not needed for this application.

Engine life-ing is an application that requires minimal investment and has a high payoff. The initial low investment required results in a comparatively high Net Present Value (NPV).

6.1.3.2 Engine Life-ing Results for Hybrid and Shared Aircraft.

Based on the above approach, the operator of a Hybrid or Shared aircraft would realize a significant gain in engine life. For this application, there are minimal onboard production costs since the data can be downloaded with current hardware and the O&S costs are limited to maintenance of the ground system. The gain is comparable to that of the Dedicated aircraft given the fleet is 1/4 the size, but the engines are more expensive.

6.1.4 Engine Life-ing Certification Considerations and Approach.

The engine life-ing application would be a Level A safety-critical application. The data required to perform engine life-ing are flight-critical and would be acquired by monitoring the flight-critical engine data bus by the Central Node. In the case of the Dedicated aircraft, this might require splicing the Aeronautical Radio, Inc. (ARINC) 429 bus to acquire the data. Within the Central Node, a process similar to that described in section 5.1.8.1 could be used to pass the data through the node, then verify the integrity of the data as it is acquired by the application on the ground. The engine life-ing model would be run with that ground process and would have to be certified for Assurance Level 1—safety-critical processing.

To ensure continued airworthiness, the effectiveness of the life-ing method would have to be compared to the current life-ing process and proven to give consistent results. The effectiveness of the new life-ing model would be tested for cases where an engine failure occurs prior to end-of-life per the existing algorithm. This process would require laboratory testing of engine components prior to installation and analysis of field data from when the parts are removed per hard-time life requirements.

6.2 ENGINE CBM APPLICATION REQUIREMENTS AND DESCRIPTION, DESIGNS, COST-BENEFIT ANALYSIS, AND CERTIFICATION CONSIDERATIONS.

6.2.1 Engine CBM Application Requirements and Description.

Proper engine and fuel control are needed to maintain efficient operation. To achieve condition-based maintenance for the engine, the following functions or capabilities would be included:

- Gas Path Analysis—This function models the temperatures, pressures, and speeds within the engine to detect failures and degradations, particularly in engine control that can lead to inefficient operation. The benefit of this application is for reduced troubleshooting and greater engine efficiency. Results can be used for opportunistic maintenance to ensure efficient operation as well as to avoid unanticipated maintenance, including removing the engine from the wing.

- Oil Debris Monitoring (ODM)—The ODM has been shown to provide an early indication of spalling and pitting in engine bearings. When damage occurs to the oil-wetted components of an engine, it usually manifests in terms of surface fatigue that starts as a small inclusion on the contact surfaces and grows progressively over time, while introducing metallic particles into the lubrication oil. The ODM systems sense the oil debris and process the data, which provides useful information regarding the degree and progression of damage. The ODM can consist of one or more of the following methods: oil filter contamination monitoring, magnet debris monitoring, and full-flow debris monitoring.

- Vibration Monitoring—This function monitors the vibration of rotating components to detect imbalance caused by events such as foreign object ingestion. It can also be used to support determination of bearing health or cracked or damaged blades. Bearing diagnostics systems primarily rely on vibration and ODM. Given that the intensity and pattern of structural vibrations are directly associated with the operation condition of a rotating machine, vibration measurement using accelerometers has long been performed. The problem with vibration-based sensing is the mechanical coupling between the component being monitored (e.g., a rolling bearing and other adjacent structural components, such as the shaft or the motor). Such coupling introduces interference to the vibration signal uniquely associated with the component of interest, resulting in a poor data quality. The effect can be significant at the beginning stage of a structural defect when the intensity of the associated vibration is often submerged. All these factors suggest that, to achieve a high signal-to-noise ratio, sensors are required to be placed as close as possible to the bearing of interest. The fielded sensors for vibration monitoring are accelerometers, which are used in a uniaxial configuration.

- Blade Tip Timing and Clearance—This function monitors the health of blades and disks, including the clearance between the blades and housing. Blade tip timing and clearance can remove the need for vibration monitoring.

The gas-path, oil debris, and blade tip timing and clearance functions can be combined to enable CBM for engines. If using these technologies the engine could be removed from the wing based on condition rather than on usage.

6.2.2 Engine CBM Design.

The objective of the engine CBM design is to implement diagnostics and prognostic function to reduce maintenance costs and operational impact. Operationally, the benefit would be shown through:

- reducing in-flight engine faults that may trigger an engine shutdown and subsequent diversion, repair at a remote base, or gate delay.

- condition-based alerts and maintenance before problems become unscheduled maintenance.

- more efficient engine operation.

- crew alerts to support response to engine-related in-flight faults.

Maintenance costs would be impacted by reducing troubleshooting time and shifting unscheduled maintenance to scheduled opportunities, thus preventing further damage to engine components that may cause secondary failures.

The advanced engine HM system would include the following areas of interest: gas-path analysis, oil debris, and vibration analyses for mechanical systems, life usage estimation, and turbine tip clearance and timing. The tip clearance and timing improves engine control and contributes to CBM of the engine components.

Technologies and methods associated with engine condition and usage-based maintenance are competitive capabilities that are sensitive to those in the business. The detailed information provided below on data rates and functional capability was based on the open literature and the opinion of domain experts.

6.2.2.1 Gas-Path Analysis.

Gas-path analysis can improve fault isolation by detecting abnormal engine operation in both engine components and control, based on temperature, speed, pressure, control modes, and environmental conditions. Faults that can be detected include seal wear, fuel pump pressure drop, and compressor blade wear or leakage. It can also support trending of engine performance degradation with usage to predict component degradation and repair. Such analysis is currently implemented on ground stations.

Gas-path analysis would be based on a similar set of parameters as the engine life-ing application. The data to support Full Authority Digital Engine Control Gas-Path Analysis include:

- Temperature (3 locations on engine)
- Burner Pressure
- Low Rotor Speed N1
- High Rotor Speed N2
- Exhaust Gas Temperature
- Exhaust Gas Pressure
- Variable Stator Vane Actuator Position
- 2.5 Bleed Actuator
- LPT ACC Position Feedback
- HPT ACC Position Feedback

- Pressure, Fan Inlet (P2)
- 14th Stage Bleed Command
- Oil Temperature
- Oil Quantity
- Oil Pressure
- Throttle Lever Angle
- Ambient Pressure (Ps2)
- Channel in Control Status
- Mach Number
- Pressure Altitude
- Total Air Temperature
- Flight Deck EPR (EPR Actual)
- EPR Command
- Burn Flow
- Burn Flow Command
- Fuel Temperature

Lower data rates (available on legacy Dedicated and Hybrid aircraft) are anticipated to reduce application effectiveness significantly in terms of the ability to support early detection and trending of faults—especially those related to, or exacerbated by, shifts in control modes. Gas-path analysis can also be supported by input from sensors in the aft of the engine measuring the generation of nitrous oxide (N_2O) and carbon monoxide (CO). The presence of these gases indicates burner health. When correlated with the temperature and pressure sensors, these can provide an indication of overall engine health.

6.2.2.2 Oil Debris and Vibration Analysis.

Oil debris and vibration analysis can provide diagnostics and prediction of faults and degradations resulting from mechanical components such as bearings, oil pumps, and damaged turbine blades. It can also provide corroborating evidence in cases where the crew reports vibration. An integrated ODM system would track oil level, as well as determine debris levels in viscosity of the oil.

All commercial aircraft currently have some form of vibration monitoring. Typically, current vibration monitoring systems report exceedances only. Advanced systems would support communications of relevant data and significant analysis results on a continuous basis so that the information could be further processed and trended in a ground-based system.

Figure 8 describes the data required to support oil debris and vibration monitoring.

Oil Debris Sensor Parameters
Oil Temperature
Oil Quantity
Oil Debris Monitor (5 16-bit words, 5 discretes for filter and particle detection)

Accelerometer Parameters
Radial Accelerometer (2)

Figure 8. Data to Support Oil Debris and Vibration Analysis

6.2.2.2.1 Tip Clearance and Timing.

A microwave-based tip clearance system is used to perform multiple engine monitoring functions, including engine speed, vibration, rotor balance, blade tip clearance, and blade tip time of arrival (TOA). A microwave controller generates radio frequency (RF) through a waveguide to a probe mounted on the turbine shroud. Energy reflected from the blade as it moves past the sensor is registered and returned to the controller for computation. The system monitors blade passage that can be converted into engine speed. Blade tip distance from the shroud is measured and controlled given an appropriate actuation means. Current systems make use of an open-loop turbine case cooling system to decrease the tip clearance. This is a gross adjustment and is very conservative in its performance. The blade's TOA information can support early detection and prediction of blade fatigue as well as detect rotor imbalance. Rotor balance and potential blade cracking information can be gathered in hot environments in real-time from RF signals. This technology prevents the need for vibration analysis using accelerometers. Figure 9 shows the processing requirements for blade tip clearance and timing.

Figure 9. Blade Tip Clearance and Timing

Potential uses of emerging technologies in this application include wireless configurations for all but RF sensors. Wireless components would have to resist temperatures via cooling technologies (e.g., heat pipes, thermoelectric, insulation) and

demonstrate reliable communications capabilities. Optical or wired digital data bus communications would enhance SPMS design flexibility. Smart sensors that could interface directly with the digital data bus would further improve performance at reduced weight and cost.

6.2.2.3 Design Trades and Recommended Designs.

The relative effectiveness and cost for the various SPMS approaches in the baseline platforms are the foundation of an HM design. The gas path analysis primarily addresses engine gas path component faults and the degradation associated with engine controls and sensors. Oil debris, vibration, and tip timing and clearance address mechanical degradation. There is some overlap between these two applications. In comparison to vibration analysis, blade tip timing can detect the early onset of blade fatigue as well as serious vibration due to foreign object damage (FOD). The gap between detecting gas path faults and mechanical faults diminishes with new, multi-dimensional sensing technologies such as electrostatic debris sensors.

For the purposes of this document, gas path analysis, oil debris, mechanical vibration monitoring via accelerometer, blade tip timing, and life-usage monitoring (see Engine Life-ing application) will be considered given the capability and maturity of these methods.

6.2.2.3.1 Recommended Dedicated and Hybrid Designs.

The following two configurations that stand out as affordable and effective are:

- Most Affordable Configuration—Gas path analysis-based is the most affordable, based on available data and mechanical system HM based on oil chip sensor and vibration analysis (state-of-the-art for modern engines) and an improved engine life-ing approach (see section 6.2.1).

- Highly-Effective, Lower Cost Configuration—Gas path analysis using all available data and mechanical system HM based on vibration analysis and oil debris analysis.

The two configurations avoid the higher-cost application features. The only new sensor needed would be the oil debris sensor, which would be relatively inexpensive to implement. A standard ARINC 429 data bus could be used to move the data from the sensor to the Engine Area Node. The design is shown in Figure 10.

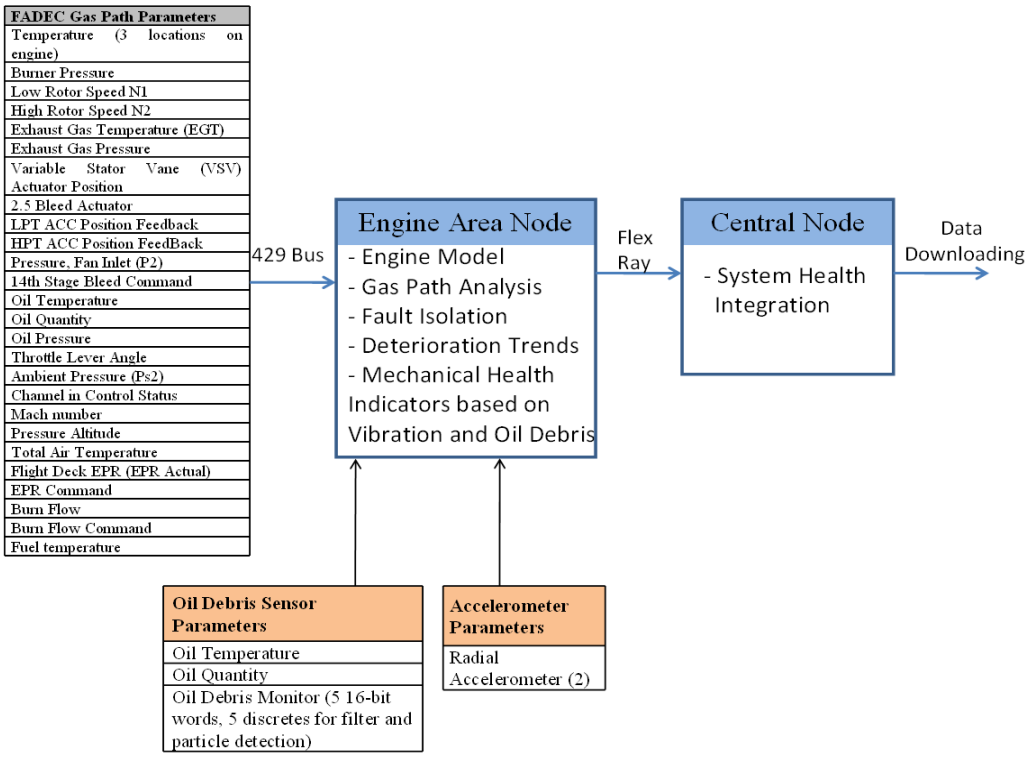

Figure 10. Engine CBM Dedicated and Hybrid Design

The functions in the Engine Area Node for the Dedicated and Hybrid are the following:

- Streaming engine data signal processing (Transforms and Filters)
- Accelerometer data signal processing (Transforms and Filters)
- Engine Performance Model (Arithmetic/Large Model)
- Fusion of Health Indicators (Large Logical Constructs/Reasoner)
- Analysis/Model Interpretation and Health Indicator Generation (Physics or Data Driven Models)
- Engine Diagnostic Model (Large Logical Constructs/Reasoner)

6.2.2.3.2 Recommended Shared Design.

In the order of cost-benefit advantage, the SPMS team recommends that the application for the Shared aircraft include ODM, tip timing and clearance sensor, and N_2O and CO sensors. Existing gas path sensors would be connected to the engine area node via any number of data bus architectures available on the airframe. Additional gas path sensors (N_2O and CO) and ODM would be connected to the engine area node processor via

existing data bus structures. The microwave system may be connected via existing data bus structures if the raw microwave data were processed locally before transmission to the hub. An alternative would be to keep the RF processing capability in the hub and route the raw microwave signals to the hub via a dedicated line. The Shared architecture allows the most flexibility for future designs with the least weight and cost impact.

The additional functions added to the engine node are the following:

- N_2O and CO signal processing (Physics or Data Driven Models)
- Tip Timing and Clearance signal processing (Filters/Physics or Data Driven Models)
- N_2O and CO health indicator generation (Physics or Data Driven Models)
- Tip Timing and Clearance health indicator generation (Physics or Data Driven Models)
- Expanded fusion function (two additional inputs)

6.2.2.3.3 Application Assessment.

This application lacks an accurate estimate of the impact of sampling rate variation for gas path analysis within Dedicated and Hybrid architectures.

6.2.3 Engine CBM Cost-Benefit Analysis.

Schedule interruptions due to the turbine engine are described as inspections for unknown problems. Many of these unknown problems are reported by the crew, but cannot be verified based on the data available to maintenance personnel.

The SPMS sensor suite is intended to resolve and predict both the unknown faults as well as other mechanical and control faults.

The gas path analysis addresses primarily engine control and efficiency faults or degradation associated with engine controls and sensors. Oil debris, vibration, tip timing, and clearance address mechanical degradation, although there is some overlap. Tip clearance can be used in engine control as an indicator of engine efficiency, thus enabling more proficient operation.

When compared to vibration analysis, blade tip timing can detect the early onset of blade fatigue. Both vibration analysis and blade tip timing can detect vibration due to FOD or damaged blade, although blade tip timing provides a greater prediction horizon.

While the maturity of the engine gas path and mechanical applications have been laboratory tested, there are no known published results on its effectiveness at this time.

6.2.3.1 Engine CBM for Dedicated Aircraft.

The cost-benefit numbers for engine CBM for the Dedicated aircraft without blade tip timing showed a small NPV loss.

The results reflect that the engine is a well inspected LRU that has a low incident rate of schedule interruptions and No Faults Found (NFF). Also, the initial high production cost for the 200 aircraft impacts the NPV of the gain.

The element that may be missing in this estimate is the ability of the more advanced sensors to detect and prevent serious damage to the engine, which would necessitate its removal and repair/shop visit. Data on the frequency of this type of situation were not available. However, if one adds 25 incidents (one per year in a fleet of 200 aircraft) that were avoided, to the direct maintenance costs for the fleet, the result is a profitable application.

The role of engine CBM is to back up the engine life-ing methods and to detect conditions brought about by engine damage. Its role may eventually be expanded to reduce inspections and to replace the engine life-ing methods described previously with condition-based removals. In any case, the cost and weight of the application necessitates a significant role or impact.

6.2.3.2 Engine CBM for Hybrid and Shared Aircraft.

The Engine CBM for the Hybrid aircraft contains the full suite of sensors: oil debris, vibration, blade tip timing, N_2O and CO, and gas path analysis.

As with Dedicated aircraft, the payoff is negative due to the rather low rate of schedule interruptions and NFF. If the addition of major incidents is included, as described with the Dedicated aircraft, the CBM application has a positive return. The results for the Shared aircraft are similar to those for the Hybrid.

6.2.4 Engine CBM Certification Considerations and Approach.

The engine data concentrator would receive the sensor data and process it as a support-critical application (maintenance support function only). In this role, the application would be effective with improving safety by advising maintenance personnel to check for degradation in rotors, blades, and bearings. However, the maintenance function would strictly rely on established processes outlined in the published Aircraft Maintenance Manual and Fault Isolation Manuals. The outputs of this application would not provide any decision-making capability—all decisions would be performed by the operator.

The rationale for promoting the application to safety-critical would be to reduce engine inspections and eventually use the technology to determine when to overhaul various sections of the engine rather than base this decision on life-ing algorithms.

6.3 THRUST REVERSERS APPLICATION REQUIREMENTS AND DESCRIPTION, DESIGNS, COST-BENEFIT ANALYSIS, AND CERTIFICATION CONSIDERATIONS.

6.3.1 Thrust Reverser Application Requirements and Description.

A Boeing 737 thrust reverser uses hydraulic actuators to slide sleeve or panel and associated air blockers in the main engine duct. This redirects the air forward to brake the vehicle. A side view of a deployed thrust reverser is shown in figure 11. One of the six actuators that translates the reverser sleeve is shown in figure 12.

Figure 11. Thrust Reverser Hydraulic Actuating System

Figure 12. Thrust Reverser Actuator

Many thrust reverser write-ups are for indication issues—"In Transit" or "TR" lights being illuminated in error. Corrective action is often to adjust (rig) the actuators and locking mechanisms. Some form of out-of-adjustment monitoring could eliminate schedule interruptions until the rigging can be performed at a convenient time. Stress on thrust reversers causes the deployment mechanisms to fatigue, resulting in failure to deploy and, in some cases, damage to engine components.

Analysis of the reverser designs indicates that the reverser rigging and slide wear can be detected by monitoring the position and velocity of the deployment and retraction. Legacy aircraft have a Linear Variable Differential Transformer (LVDT) that monitors the position of the actuators. The LVDT is interfaced to the EEC unit. Monitoring the speed of deployment and the variability in the start and finish of the stroke should provide the information needed to predict a future rigging problem and anticipate binding of the reverser slides during motion.

The output of the application could be used to perform opportunistic maintenance to avoid unanticipated delays. This use of the application results would be support-critical. It may be beneficial to use the application to extend or eliminate inspections.

However, the LVDT and the proximity switches used to indicate deployment and the stowed condition are interfaced with the flight critical EEC where the information is processed. In a legacy aircraft, getting access to this data and/or updating flight critical software to include the application would pose a challenge in terms of affordability. For advanced aircraft, the LVDT interface might be routed to a SPMS processing unit that may be included in an advanced EEC.

6.3.2 Thrust Reverser Design.

The major fault mode to be addressed is track slider wear and surface degradation and binding that lead to improper reverser stowage. A reverser slider and wear surface are shown in figure 13. The straightforward approach would be to monitor position of the reverser as it is being deployed and retracted using data from the existing LVDT position sensors. In the baseline aircraft, the EEC controls the thrust reverser and monitors its position as well as the stowed and locked states via proximity switches. For the Hybrid and Shared systems, the diagnostic and prognostic capability could be realized by processing these data in a centralized maintenance processor.

Figure 13. Thrust Reverser Slide and Track

In the case of the Dedicated baseline, the EEC software could be updated to access the data needed to effectively monitor the reverser, but the cost would be excessive. Comparing the left and right reverser times-to-deploy and times-to-stow might provide some insight, but would not be a reliable prognostic. Integrating a second LVDT to monitor sleeve position is not a viable option because possible interference with the current flight critical system would raise certification issues.

Acoustic sensing is an alternative approach to predicting thrust reverser failure. Acoustic sensing requires the installation of a surface-mounted sensor to detect sound waves in material. Among other suppliers, Curtis Wright offers such sensing capability under the brand name Stress Wave Analysis (SWAN). Stress wave sensor technology is an acoustic-based sensor that detects friction and shock to a system. It has been applied to a range of mechanical systems.

One or two sensors would be mounted on the upper and lower track to detect changes in the acoustic signature of the track as the reverser opens and closes. The sensors would be connected via wire to a signal conditioning unit that would output raw data, FFT feature data, or both. The results from the signal conditioning unit would be sent to a local or area health node.

Mounting the acoustic sensors and signal processing unit would be a major challenge to keeping this application less intrusive. It would be best to mount the sensors behind and between the tracks on the lower and top of the engine housing. Accommodations would have to be made to connect the signal processing unit to an HM node in the engine area.

In addition to detecting degradation in the reverser slide tracks, the acoustic sensors might also detect anomalies of the blocker doors or acoustic insulation that is attached to the inside of the sleeve (which is made of composite material on later-model aircraft).

6.3.2.1 Design Trades and Baseline Recommendations.

6.3.2.1.1 Dedicated Aircraft.

Prognostic capability would be achieved by monitoring the tracks and sliders by means of the acoustic monitoring described in section 6.3.2. Figure 14 shows the application for the Dedicated architecture.

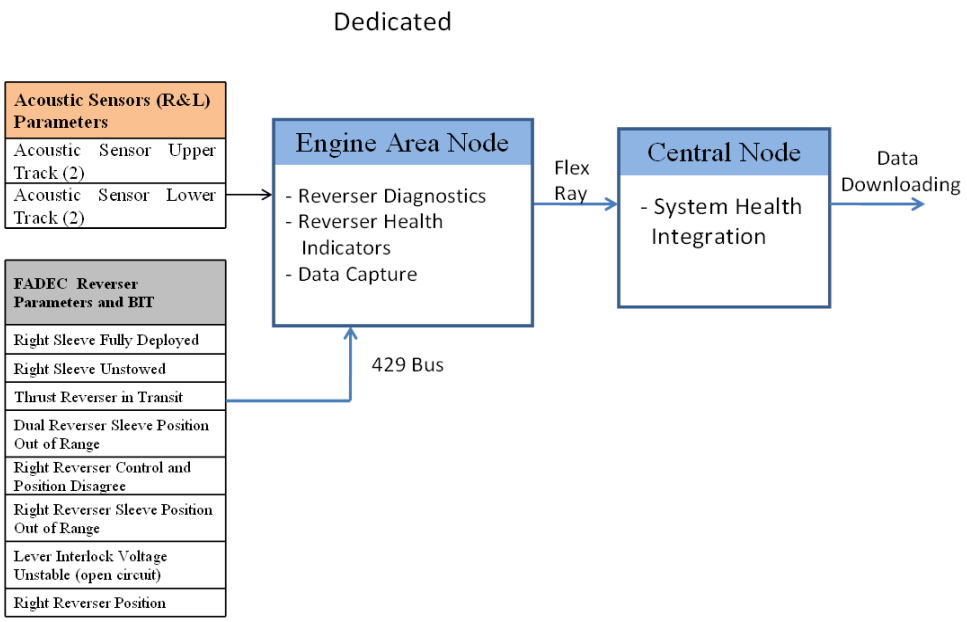

Figure 14. Acoustic Monitoring Schematic for Thrust Reverser Dedicated Architecture

The functions associated with reverser HM are the following:

- Acoustic Analysis Upper and Lower Track (Transforms)
- Reverser Diagnostics (Arithmetic/Small Model)
- Reverser Acoustic Health Indictor (Physics or Data Driven Models)

These functions would be replicated for the left and right engine.

The applications for the Hybrid and Shared architecture (see figure 15) are similar, with the exception that the data rate available in the case of the Shared architecture would be higher than what would be available from the Hybrid architecture.

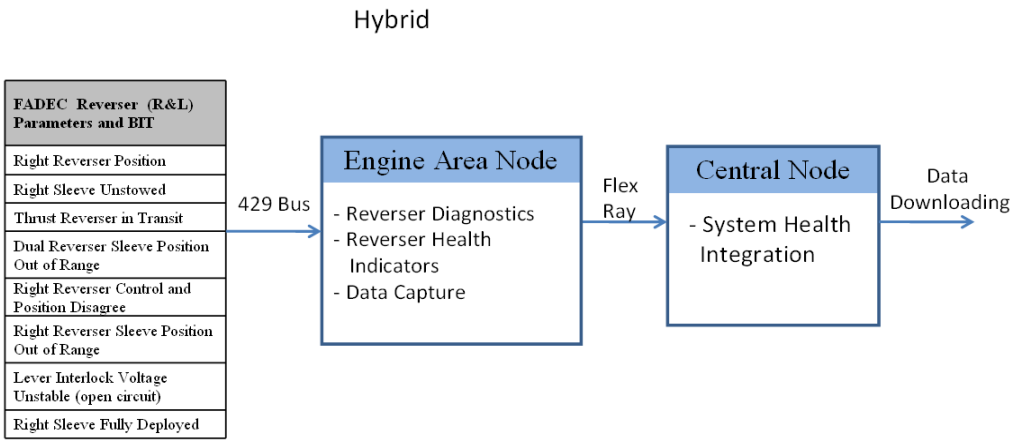

Figure 15. Thrust Reverser Hybrid Architecture

The functions associated with reverser HM are the following:

- Reverser Position Analysis (Physics or Data Driven Models)
- Reverser Diagnostics (Arithmetic/Small Model (Arithmetic and logical))
- Reverser Health Indictor (Physics or Data Driven Models)

The functions for the Shared platform are the same as those of the Hybrid.

6.3.3 Thrust Reverser Cost-Benefit Analysis.

Maintenance records for the Dedicated aircraft show that many of the schedule interruptions are described as engine thrust reversal general.

The major fault modes are: failure to lock after being deployed due to slide wear, locking mechanism, air blocker linkage, and hydraulic actuator and hydraulic system failures—with the air blocker linkage being the predominant fault.

Although the application is getting increased attention, there is no known existing research or application development in this area. There are no known data sets that characterize the reverser fault, so the application is at a Technology Readiness Level (TRL) of 3/4. While it should be possible to predict reverser fault modes with the selected technology, there are no known conclusive demonstrations of such a capability at this time.

6.3.3.1 Thrust Reverser Cost-Benefit Analysis Results for Dedicated Aircraft.

The weight of the acoustic sensors and a special processor increased the O&S cost, which outweigh any positive gain from avoidance of schedule interruptions.

6.3.3.2 Thrust Reverser Cost-Benefit Analysis Results for Hybrid Aircraft.

The technology used in the thrust reverser application for the Hybrid aircraft modeled the speed of the thrust reverser based on existing position data. This approach reduced the development and production costs and resulted in a modest gain.

6.3.3.3 Thrust Reverser Cost-Benefit Analysis Results for Shared Aircraft.

The cost-benefit analysis results for the Shared aircraft are similar to those for the Hybrid aircraft, with a slight difference due to the allocation of part of the engine data concentrator cost.

6.3.4 Thrust Reverser Certification Considerations and Approach.

The airworthiness of the additional sensor, data acquisition, and processing hardware and wiring would have to be established. The acoustic sensors may not have been previously used on aircraft. Acoustic sensors are based on the piezo-electric material used in accelerometers.

The onboard HM software would be run in an engine data concentrator and in the central node, partitioned from any flight-critical software for all baseline aircraft.

During a trial test period, the effectiveness of the support-critical prognostic capability could be established by comparing its output with the condition of the slide and track.

6.4 ENGINE START SPMS REQUIREMENTS, DESIGNS, COST-BENEFIT ANALYSIS, AND CERTIFICATION CONSIDERATIONS.

6.4.1 Air Starter System Application Requirements and Description.

The Starter Control Valve (SCV) is located above the turbine air starter (shown in figure 16). Controls initiate the start sequence, which opens a pneumatic start valve that allows bleed air from the Auxiliary Power Unit (APU), other engine, or ground source to enter the air turbine starter. A 28V direct current (DC) solenoid controls the pressure to initiate the valve's opening.

Common failure modes for the starting system are associated with the starter control valve and, to a lesser extent, the air turbine that drives the engine during the starting process. For commercial airliners, most engines are started by means of a pneumatic air turbine starter motor, while the motor is controlled by means of the pneumatic SCV. This system uses high temperature, low pressure air from the APU. These components

exist in a varied-temperature and -humidity environment where failures are prevalent. Ductwork is water prone and subjected to condensation and freezing.

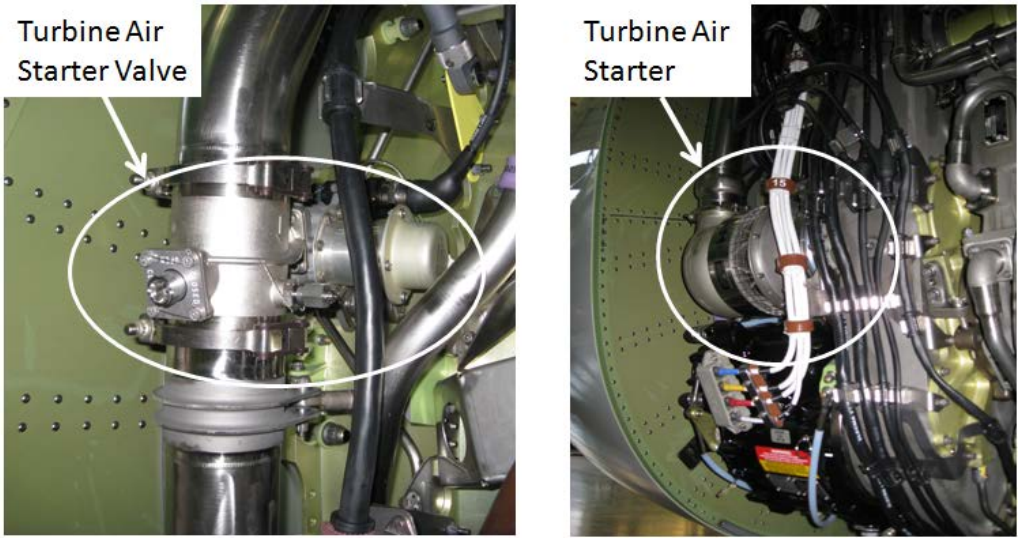

Figure 16. Engine Air Starter System

The valve is usually failed closed—it will not allow air to the Starter Motor, so there is no motive force to turn the engine to start. The problem usually manifests itself when the aircraft is loaded with passengers and ready to depart the gate, which makes starter failures expensive for the operator.

The main start valve can fail to open for various reasons—the failure of the solenoid valve, pneumatic plunger, or sticking of the main valve. For the valve inoperative (failed closed), which is the dominant failure mode, the MEL usually provides a means so maintenance can manually open and close the valve to permit dispatch, but the first occurrence will usually result in a delay. Though the desired solution is a prognostic with a 10-day prediction period, for the starter valve failures, even a one-day prediction capability would allow the airline to have a maintainer at the aircraft and ready to manually open the start valve and prevent a flight delay.

To a lesser extent, starter failures can be due to bearing failures of the starter turbine. Starter bearing failures are caused by starter performance degradation. When the lubrication oil consumption rate becomes too high, the oil flow provided to the starter is insufficient. The starter then fails due to a sheared drive shaft or turbine seizing—both manifest themselves as no, or slow, engine rotation when air is ported to the starter.

Air starters may be configured with either an isolated oil reservoir or by sharing oil with the engine. In the case of an isolated oil system, oil servicing is done based on intervals prescribed for a certain number of engine cycles or hours. The servicing is part of standard propulsion oil service. This servicing includes topping off of the oil, filter maintenance, and chip detector inspection. If the system is not isolated, oil overflows through the accessory gearbox and undergoes filtering and chip detection.

Opening the start valve is a two-stage process where a solenoid-actuated valve creates a pressure differential on a spring loaded plunger or poppet valve (closing mechanism). The difference in air pressure causes the plunger to act against the spring and pull on a crank to open the main air start valve. Field data show the dominate failure and the cost of gate delays for the engine starter is the pneumatic valve sticking shut. Thus, this is the focus of the SPMS HM application.

Subject Matter Experts (SMEs) believe that valve sticking is due to condensation, which causes corrosion. The approach proposed in this report is to monitor for early indications of corrosion in the transition from closed to open. If the valve sticks, the Dedicated aircraft can be cranked open manually through an opening in the engine nacelle. The prognosis of the valve health is based on a combination of current monitoring to determine the timing of the solenoid being opened, sensing the pressure in the actuator, and the transition time for the valve from open/closed limit switches.

6.4.1.1 Starter and Solenoid Valve Prognostics.

To avoid a failure of an engine start, both the pneumatic starter valve and the solenoid that controls the pressure differential will be monitored to predict degradation of these components.

Physics-based models of the valves and their degradations will provide accurate life predictions for the solenoid valve [3]. For example, changes in magnetic fields, forces, gas flow, and valve geometry due to wear may cause incomplete or slow actuation, valve leakage, or solenoid current changes. Solenoid valve degradation was extensively studied by National Aeronautics and Space Administration (NASA) [4 and 5].

Baseline models for the solenoid, valve poppet or plunger, air start valve, pressure, and air mass flow rate would define the nominal valve behaviors. For the solenoid valve, wear and degradation due to valve sliding and impact, as well as coil insulation breakdown and corrosion, would be modeled to characterize the effects of wear over time [1]. A position sensor, such as a Rotary Variable Differential Transformer (RVDT), would be added to detect the speed and timing of the opening of the main start valve. Typical solenoid valve operation is shown in figure 17 [6].

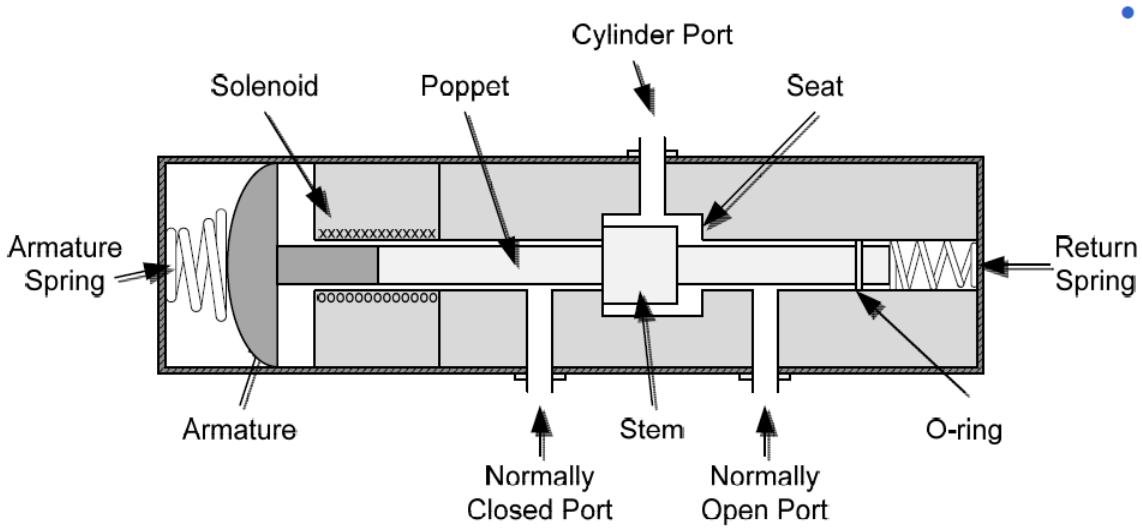

Figure 17. Typical Solenoid Valve

The baseline of the plunger apparatus would be described by plunger position and velocity, as well as the masses of gas in the piston chambers. Forces of the gas, from the fluid flowing through the valve chamber, the weight of the plug, stem, and piston, the spring force, friction forces, and the contact forces would be modeled. Damage modeling would entail changes of system parameters due to wear and damage accumulation equations for the contacting surfaces and the spring. Damage can be estimated by integrating the baseline model with the damage model. A typical valve plunger apparatus is shown opened and closed in figure 18.

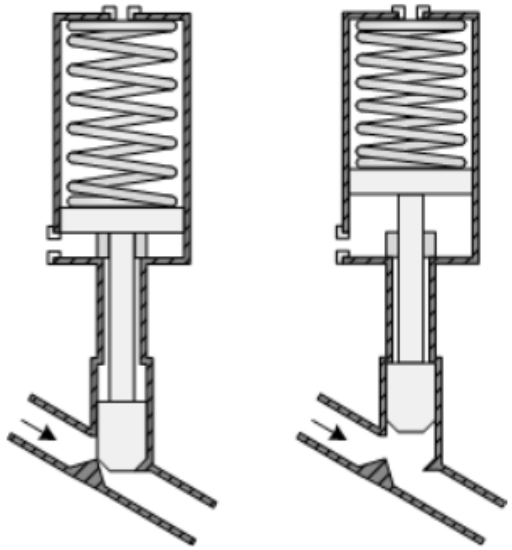

Figure 18. Typical Pneumatic Valve Open and Close [7]

The cost to develop and validate these models would have to be traded against the benefits of not having delayed flights due to start valve problem.

6.4.2 Air Starter Application Design.

The combination of sensing the solenoid current, sensing the pressure in the actuator, and the temperature of the air flow should enable detection and trending of the transition time and profile for the valve. These methods have been applied to electro-mechanical valves, but there are no known applications to pneumatic valves. It has been suggested that occasionally exercising the valve after flight may be a way of preventing corrosion and causing the valve to stick.

The start valve is a spring-loaded, pneumatic valve controlled by a 28VDC solenoid. When start is initiated, the solenoid is activated, which causes the valve to open and begin turning the turbine starter. The solenoid closes as the engine speed, as measured from N2, increases. When the start valve opens, it provides an open indication to the controller. Also, the valve can be manually opened with a wrench through the cowling of the engine. Analysis of maintenance data shows that the most significant failure mode of the system is the start valve sticking shut. SMEs agree that this is due to corrosion brought about by temperature change and the resulting condensation.

This design is representative of both the Dedicated and Hybrid aircraft. Shared aircraft would not use air starters, but rather starter/generators.

The objective of an HM function would be to predict and prevent valve failure. The precursors to failure are believed to be early signs of additional force needed to open the valve, causing a time delay for a given pneumatic force profile. It would be beneficial to monitor valve position as a function of time. However, given the temperatures associated with the APU or engine bleed air, mounting an RVDT or LVDT to measure position would likely lead to a complex and expensive design. A simple approach would be to include one dual Microelectromechanical Systems (MEMS) pressure and temperature sensor in the line to the solenoid vent. The pressure would provide a measure of force on the valve. The temperature measurement would be used to compensate for any valve response variation due to temperature, including ice buildup.

The inputs to the HM algorithm would be the air-start switch position, the valve open indication, and the temperature and pressure of the air driving the valve. The switch selection (manual or automated mode if available) and valve open discrete indication would be synchronized with the pressure and temperature profile.

It may be beneficial when monitoring the time for the valve to indicate a closing state that would be timed from “start cutout” to the valve “not open” as indicated by the contact switch. Start cutout occurs when the engine speed reaches a certain level.

A lower fidelity approach to predicting future valve stickage would be to base a prediction on the time difference between start switch selection (e.g., ground start, air start) and the valve open indication. While the precursors to valve failure are not completely understood, this method may have marginal success.

The rate that the start switch, valve open/closing, and start cutout are captured vary by engine OEM and aircraft. In certain cases, there can be as much as a .5 second delay in the outputting of the data. These factors might be addressed to a degree by averaging over a number of events.

More precise timing of these events could be attained by monitoring the solenoid and valve open switch lines at the valve as needed for a specific application. This would require additional wiring from a remotely located health node or some insulation/isolation approach that would allow the local health node to be implemented on the valve. Monitoring the solenoid valve current would have the additional benefit of detecting, even predicting, solenoid degradation. The success of a prognostic algorithm would depend on the ability to detect the valve hesitation as a precursor to valve failure. This may be difficult to detect given noise in the motive force and inertia in the valve mechanism.

6.4.2.1 Design Trades and Recommended Designs.

6.4.2.1.1 Dedicated and Hybrid Aircraft.

Prognostic capability would be achieved by monitoring the start switch selection, the valve open indication, and the temperature and pressure of the gas acting on the valve, as shown in figure 19.

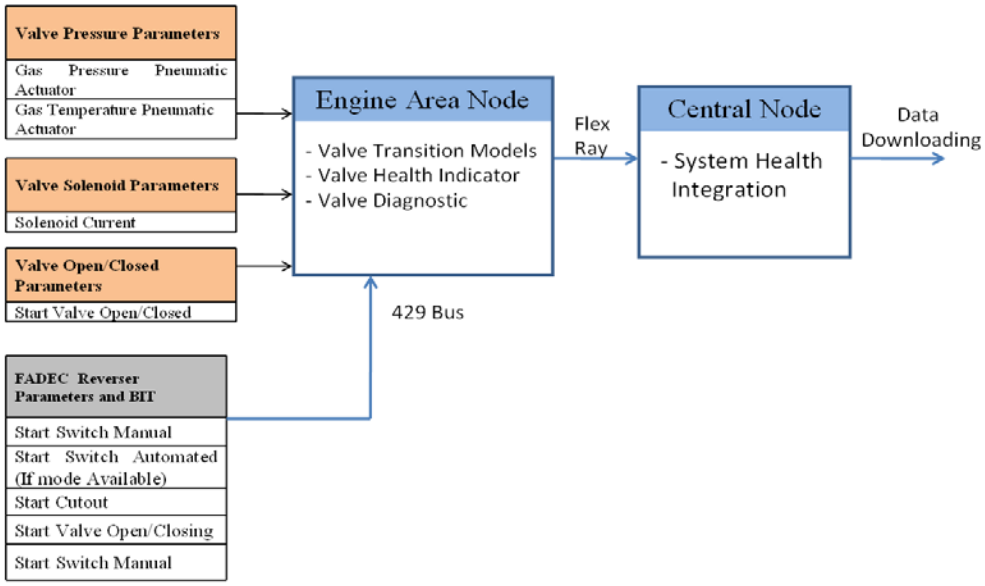

Figure 19. Air Starter HM—Dedicated and Hybrid Aircraft

The function associated with determining the health of the starter valve are the following:

- Transition Models (Arithmetic/Small Model)
- Health Indicator (Arithmetic/Small Model)

- Diagnostic Model (Arithmetic/Small Model)

6.4.2.1.2 Shared Aircraft.

Air start is not applicable to the Shared architecture.

6.4.2.1.3 Application Assessment.

The detailed nature of the air start valve failure to open and the effectiveness of the air starter prognostic based on analysis of the valve transition profiles are not well known.

6.4.3 Air Starter Cost-Benefit Analysis.

If valve sticking and the health of the solenoid could be successfully trended and predicted, this would address 90% of the delays associated with the air starter. Delays could be avoided by either changing out the valve or by informing maintenance personnel of the need to assist in opening the valve. While a prediction horizon of 3 days is beneficial, the gain can be realized with less of a horizon, provided maintenance personnel are prepared to respond promptly.

One major fault the air starter has is the valve sticking, giving it a 0% NFF rate.

6.4.3.1 Air Starter Cost-Benefit Analysis for Dedicated Aircraft.

The CBA results for the air starter application produced a small gain. Avoidance of schedule interruptions was the major benefit driver, though the weight and cost of the sensors counteracted this gain.

6.4.3.2 Air Starter Cost-Benefit Analysis for Hybrid Aircraft.

Compared to the Dedicated aircraft, the lack of gain was due to a small number of schedule interruptions for the Hybrid aircraft.

6.4.4 Air Starter Certification Considerations and Approach.

The airworthiness and hazard potential of the additional temperature, pressure, position and accelerometer sensors, data acquisition, energy harvesting, wireless, processing hardware, and wiring to the sensors would need to be established. This hardware would have to be environmentally qualified and proven not to impact safety of flight. Pressure monitoring in high-temperature environments (i.e., engines) could be accomplished by running tubes from the area of interest to the engine control unit. Introducing this technology in a support-critical role could benefit engine HM and control.

The onboard HM software would be run in the engine data concentrators and central node, partitioning it from any flight-critical software for all baseline aircraft.

During a trial test period, the effectiveness of the support-critical prognostic capability could be established by comparing its output with the condition of removed LRUs.

6.5 TIRE APPLICATION REQUIREMENTS AND DESCRIPTION, DESIGNS, COST-BENEFIT ANALYSIS, AND CERTIFICATION CONSIDERATIONS.

6.5.1 Tire Application Requirements and Description.

Routine tire maintenance includes 24- or 48-hour tire inspection requirements—both at hubs, where there are many maintenance technicians, and at remote destinations where the operator may not have ready access to qualified personnel. Thus, it is beneficial to have an SPMS application to increase the inspection interval or, as a future goal, eliminate tire inspections entirely. During operations, tire removal or replacement events can cause schedule interruptions. An SPMS application would monitor factors related to tire replacement (e.g., normal tire wear, tire damage, or over-stress conditions).

The aircraft would use an SPMS application and other onboard taxi, takeoff, and landing parameters to estimate tire wear and predict when the tire would have to be removed. The overall impact would be to extend inspection intervals, optimize aircraft routing and, to enable the tire retreader to make accurate determinations relative to the integrity of the used carcass.

In addition to tire life estimation, the SPMS application would monitor and trend tire pressure, enabling planned maintenance. Tire Pressure Monitoring Systems (TPMS) automatically measure pressure on some commercial aircraft, but, in general, legacy aircraft require manual pressure measurement. The TPMS measure tire pressure and temperature while displaying this information on a Dedicated tire and brake flight deck display. This allows the airlines to avoid manual pressure measurement for an extra 24 hours, by allowing the flight deck display reading to be used as the official inspection reading. The pressure may have some built-in correction for the temperature, as the maintenance task cards call for reading the tire pressures at ambient conditions, when the tires have cooled after landing. There are sensors that use infrared to measure the tire rubber temperature. The benefit is that the reading is unaffected by heat-soak from the rim and brakes.

6.5.2 Tire Design.

The objective of the tire application is to: (1) provide the crew with the current status of tire pressure and temperature, (2) provide a current snapshot of the tire's health based primarily on air pressure, and (3) compile a historical usage record for the tire life and carcass reuse. A step toward increasing tire inspections intervals would include continuously monitoring tire pressure.

Objective 1 is already being achieved on current Hybrid aircraft, such as the Boeing 777, with COTS tire pressure monitoring. The tire pressure is continuously monitored and provided to an EICAS display. A typical installation is shown in figure 20.

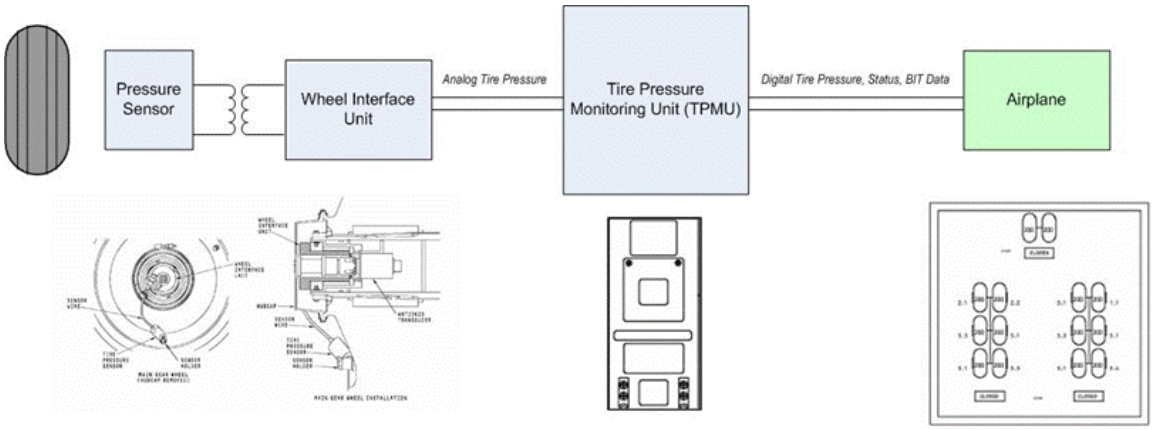

Figure 20. The TPMS

The tire pressure sensor/fill valve is made of an air fill valve and three independent pressure sensing channels that provide accurate tire pressure. The tire pressure sensor/fill valve is installed in the wheel. A relay transformer hubcap assembly connects to the tire pressure sensor/fill valve.

The Wheel Interface Unit (WIU) is a rotating transformer. The WIU sends the tire pressure signal across the rotating interface of the wheel by inductance. The WIUs change the output from the tire pressure sensors to a frequency that is in proportion to the tire pressure. The relay transformer rotates as the wheel rotates, creating a rotational transformer with the in-axle adapter transformer assembly. The relay transformer hubcap assembly is installed on each wheel and provides the interface between the pressure sensor/fill valve and the in-axle transformer. Outside of the hubcap, the relay transformer is physically connected to the pressure sensor/fill valve using a coupling ring that fits around the outer casing of the pressure sensor/fill valve.

The Tire Pressure Monitoring Unit (TPMU) supplies power to the WIUs and the tire pressure sensors. It gets the tire pressure inputs and sends this data to the airplane. On the Hybrid airplane, these data are provided via an ARINC 629 data bus to the avionics rack. The TPMU also monitors the tire pressure indication system components for faults. Tire temperature is a key input to an assessment of overall tire health and long term life, supporting objectives 2 and 3 above.

Tire OEMs rely on tire usage data collected during inspections to determine the number of retreads a tire carcass can withstand safely. The SPMS application would provide additional information on the tire fatigue-based tire pressure, temperature, overload conditions, and aircraft recorded parametric data related to taxi, takeoff, and landing events. This analysis has much in common with the hard landing and landing gear fatigue application.

6.5.2.1 The COTS-Based Retrofit.

The most straightforward approach to improving tire health on legacy/Dedicated platforms is to retrofit the COTS TPMS, as shown in figure 21. This approach provides continuous monitoring of tire pressure as well as an analysis of tire wear and fatigue based on its history of pressure, loading, and operational events.

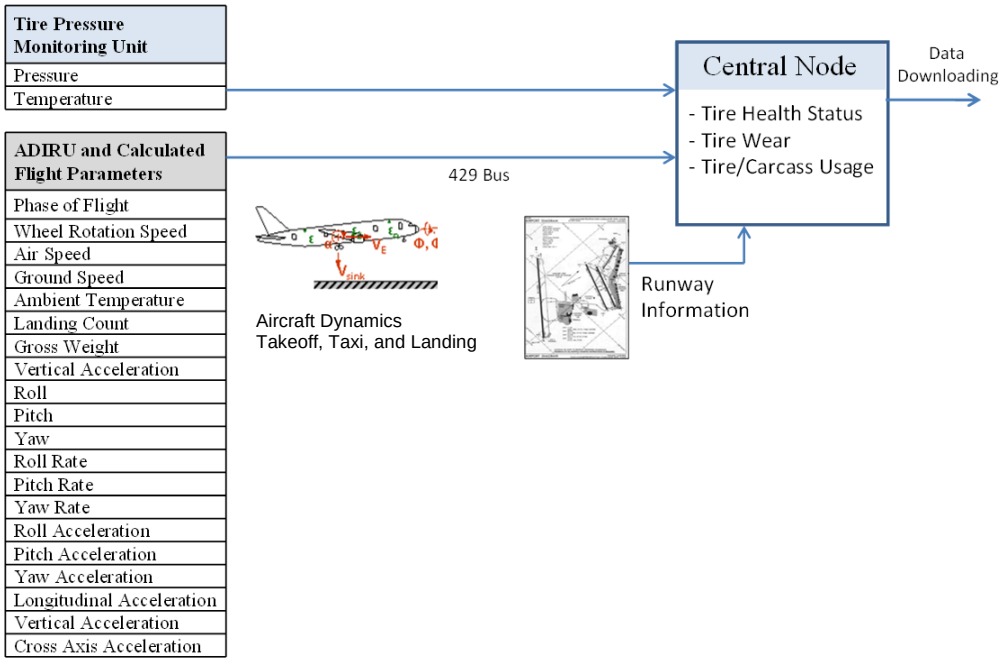

Figure 21. Retrofit of a Commercial Off-the-Shelf Tire Pressure Monitoring System

Features of this design are as follows:

- The sensor and hubcap hardware would have to be customized to fit the fill-valve and wheel of the airplane, thus some tailoring of the hardware would be required.
- The software would have to be modified to reflect the pressure specifications, pressure thresholds, and number of tires on the aircraft.
- The installation design would include the additional 28VDC power, wiring, and rack, as well as power-on control and circuit breaker.
- The design would add an interface to the Central Health Node where tire data could be compressed and/or processed and downloaded.
- Both hardware qualification activities and software certification would be required for any new configurations. The TPMU hardware would not require re-qualification.
- The interface and controls and displays for the tire pressure could be added as appropriate.

- The COTS system is mature and certified, and the changes would be made to a well-understood system. The certification effort would be less involved than with an entirely new system design.

The algorithms for tire wear and carcass life are based on aircraft dynamics for landing, taxi times and loads, and tire pressure and temperature history. While shown as implemented onboard, these algorithms could also be implemented in a ground-based facility if the data were downloaded.

6.5.2.2 Wireless Sensing With Local Health Node.

Shown in figure 22, a second configuration would be created with the same functionality as the COTS retrofit but will also use a Local Health Node on the gear. The basis for this configuration is that it can be integrated with other applications (e.g., brake and hard landing) in a synergistic manner. As stated above, the processing associated with tire wear and life can be performed offboard by downloading the necessary data.

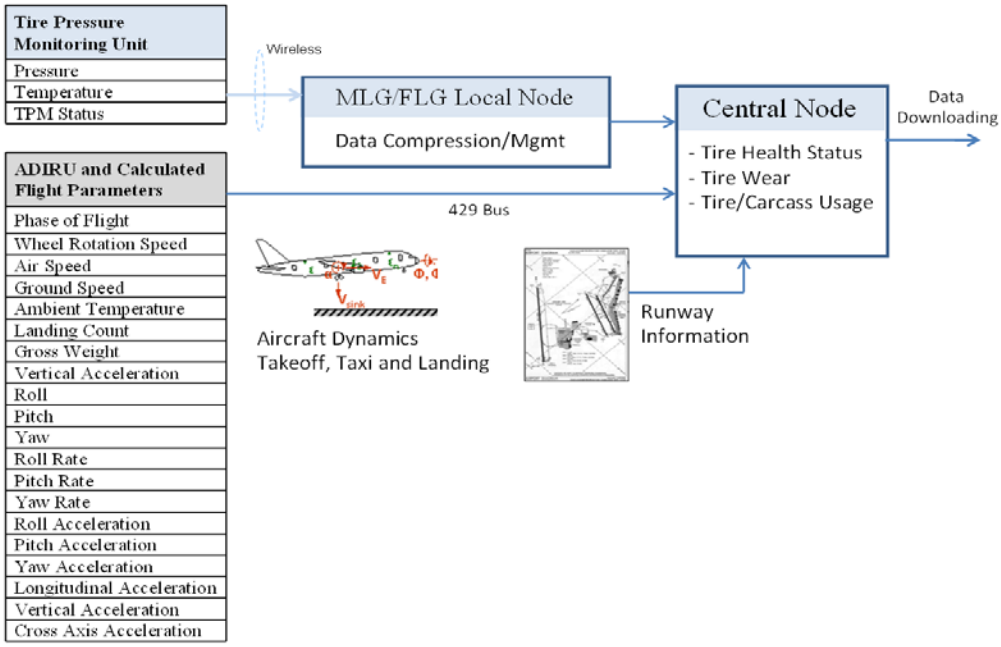

Figure 22. Wireless Tire Pressure Sensor, Local Health Node, With an SPMS Processor

Radio-transmitted wireless sensors would measure the tire pressure and temperature. The sensors would transmit the data to a Local Health Node that would provide the data from that tire along with other tires or sensors in the local area to the Central Health Node.

The costs and benefits that would be incurred for this option are as follows:

- The sensors would have to be customized to fit the fill-valve.
- Effective placement of the sensor antenna and Local Health Node would have to be determined with testing and analysis.
- The software would have to be designed and developed to reflect the pressure specifications and number of tires on the aircraft.
- The installation design would include the additional power for the Local Health Node and wiring, as well as power-on control and circuit breaker.
- The means to power the sensor would have to be selected. The least invasive method would be the use of a battery. As a growth option, the battery would be chargeable with some means of energy harvesting.
- Both hardware qualification activities and software certification would be required for any new configurations. The use of the wireless sensors would require some effort, especially if powered with a battery and energy harvesting. That is because these systems are not currently certified for use on commercial aircraft.
- The benefit of this wireless system is that it lends itself to retrofit installations. There would be minimal wiring and additional weight with the presence of a Local Health Node.
- Certification effort would be extensive since this would be starting with a new system design. No additional weight would be incurred beside the sensors and WIUs, since there would be no Dedicated TPMU.

6.5.2.3 Dedicated, Hybrid, or Shared Design.

The COTS-based retrofit provides the least expensive approach to implementing the tire application for any platform.

If it was desirable to include additional SPMS applications, such as hard landing brakes, then it would be efficient to adopt the wireless sensing with a Local Health Node, which could support these other applications as well.

The functions to be implemented in the area and Central Nodes are the following:

- Main Landing Gear (MLG) /Nose Landing Gear (NLG) Area Node

  - Tire Data Compression (Filters)

- Central Node

  - Tire Health Assessment based on tire pressure (Arithmetic/Small Model)
  - Tire Wear estimation (Physics or Data Driven Models)
  - Carcass Life-ing (Physics or Data Driven Models)

6.5.2.4 Application Assessment.

The effectiveness of the algorithm to estimate tire wear and carcass life is unknown. The benefits of maintaining proper tire pressure, monitoring and predicting tire life, and estimating the life of tire carcasses are estimated by SMEs to be one or two additional retreads, which represents a significant increase to carcass life.

6.5.3 Tires Cost-Benefit Analysis.

The major benefit of the tire application is the real-time monitoring of the tire pressure to avoid early deterioration of the tire carcass. The TRL for this work is a 3.

6.5.3.1 Tires Cost-Benefit Analysis for Dedicated Aircraft.

Positive CBA results are represented by retreading the tire carcass a greater number of times (as described in section 6.5.2.4) and by a reduction in unscheduled maintenance due to keeping the tires properly pressurized. The application showed a significant gain since it impacted an area of major expense for the airline operator.

6.5.3.2 Tires Cost-Benefit Analysis for Hybrid Aircraft.

The analysis results for the tires and brakes application for the Hybrid aircraft show a strong return based the ability to retread the tires an additional number of times.

6.5.3.3 Tires Cost-Benefit Analysis Results for Shared Aircraft.

The Shared aircraft has fewer tires than the Hybrid, but again shows strong return.

6.5.4 Tires Certification Considerations and Approach.

The tire pressure monitoring and alerts to the crew would be flight-critical. The SPMS application would be support-critical. The tire pressure and temperature would be used to better maintain the condition of the tire, thus extending the use of the carcass so it could be retread up to two additional times. The SPMS application would aid in reducing

damage to tire carcasses and would provide input as to when a tire had reached end-of-life.

It is assumed that normal tire inspections not eliminated by this application would detect any anomalies in the retreaded tires. The SPMS application would have no impact on safety.

If, as with the Hybrid or Shared aircraft, where tire pressure and/or temperature monitoring was currently installed, these data could be used as an input to this application.

The airworthiness of the additional pressure and temperature sensors, data acquisition and processing hardware, and wiring/wireless communications equipment would need to be established. There are no new technologies being introduced except for the wireless communication and energy harvesting.

6.6 BRAKES SPMS APPLICATION REQUIREMENTS AND DESCRIPTION, DESIGN, COST-BENEFIT ANALYSIS, AND CERTIFICATION CONSIDERATIONS.

6.6.1 Brakes SPMS Application Requirements and Description.

Aircraft brake inspections are required to ensure brakes are safe for continued operations. Brake wear inspections are required periodically, (generally by flight cycles) the interval varying according to brake type and aircraft. A maintainer looks at a wear pin (see figure 23) to ensure that the brake is still serviceable. However, most maintenance personnel check the brake wear indicators at the same time tires are inspected. Detection of an anomaly during this inspection typically results in a maintenance action to change the brake, which can induce a flight delay. Thus, it is desirable to have an automated SPMS application to monitor factors related to brake safety including wear, temperature, and use. The SPMS application would provide advanced indication of an anomalous condition, increase the manual inspection interval (or perhaps eliminate manual brake inspections entirely), provide a current snapshot of the brake's health, and compile historical usage record for the brake.

Figure 23. Brake Wear Pin

Currently, there are Brake Temperature Monitoring Systems (BTMS) that automatically measure brake temperatures on some aircraft and display this information to the pilot, although generally, legacy aircraft lack this capability. The BTMS allow the airlines to accurately quantify the brake temperature, which is one method used to determine how quickly the aircraft can take off again. Comparison of the brake temperature indications can also give an overall indication of the health of the braking system. For example, extremes in temperature on a given wheel can indicate the potential of a dragging or an inoperative brake, respectively. Currently, table lookups are used to determine time before takeoff, based on parameters such as ambient temperature, time since last landing, and weight of aircraft. Aircraft brakes may also have built-in sensors to monitor brake wear during use.

Current brakes may also incorporate electronic-wear sensors. These sensors are based on the assumption that as brakes wear, the amount of actuator displacement increases proportionately. A method to monitor actuator displacement is use of an LVDT.

Brake usage data will be monitored, recorded, and analyzed. Brake application cycles, brake application time, brake pressure, landing distances, aircraft weight, taxi distance, time, and ambient temperature are data that can be used to establish brake health. Brake force will be determined based on strain gauges applied to torque links on the brake structure.

An SPMS brake application will provide:

- Accurate information relative to brake usage and environmental exposure.
- Automated brake wear monitoring.
- Automated brake temperature monitoring.
- A means to predict wear based on past usage.
- A means to monitor brake performance.

This information will be used to create optimal maintenance schedules, reduce the number of maintenance delays, reduce operational delays due to thermal issues, and quantify brake performance overall, and also from one wheel to another.

6.6.2 Brakes Application Design.

The objective of the brake application is to:

- Determine the condition of the brakes.
- Provide a prediction of brake pad wear so that maintenance can schedule and replace the brake at an optimum time.

The SPMS application would monitor the brakes for wear and estimate actual brake condition (wear, temperature, and operations history) in order to trend and predict the remaining brake life available before replacement.

The SPMS application would provide advanced indication of an abnormal condition, contribute to the eventual increase of the manual inspection interval (or perhaps eliminate manual brake inspections entirely), and predict brake wear to enable planned maintenance.

Comparison of the brake temperature indications can give an overall indication of the health of the braking system. For example, inappropriately high or low temperatures on any given wheel can indicate the potential of a dragging or an inoperative brake, respectively.

Two approaches are presented: (1) to use only flight data and runway characteristics to advise of extreme usage conditions and to predict wear, (2) to automate the measurement of pad thickness and monitor brake temperature, combining this information with flight parameters and runway conditions to predict brake wear and condition.

6.6.2.1 Brake Condition and Brake Wear Estimation Based on Usage.

The usage-based estimation of brake pad wear is determined by the use of the brakes during each landing. As shown in figure 24, brake usage would be based on the aircraft weight and flight parameters. The characteristic runway location and conditions would also be taken into account.

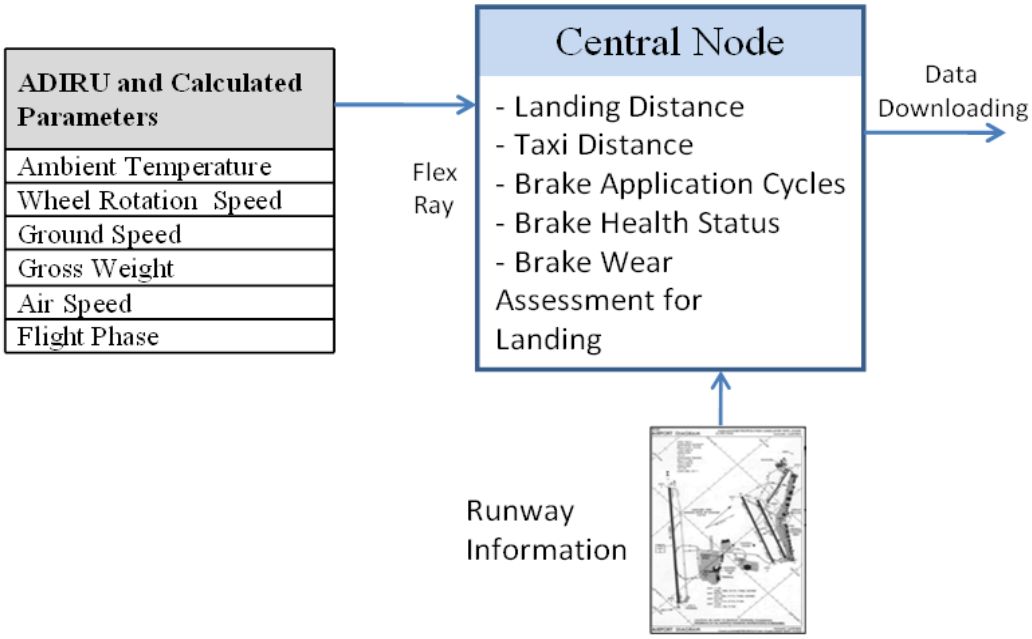

Figure 24. Brake Wear Estimation Based on Usage

Brake application cycles, brake application time, landing distances, aircraft weight, taxi distance, time, and ambient temperature are data that can be used to indicate brake degradation and to predict brake wear to drive planned maintenance. The capture of relevant data would have to be done during operation by the Central Health Node. It would prove best to do wear prediction using ground-based resources.

6.6.2.2 Brake Condition and Brake Wear Estimation Based on Measurement and Usage.

This approach includes sensors that measure brake pad thickness and brake temperature. The design in figure 25 shows wireless sensors to communicate these data to a Local Health Node located in the vicinity of the landing gear. The sensors may be wired or wireless depending on the platform, desired location of the local node and other desired functions of the local node.

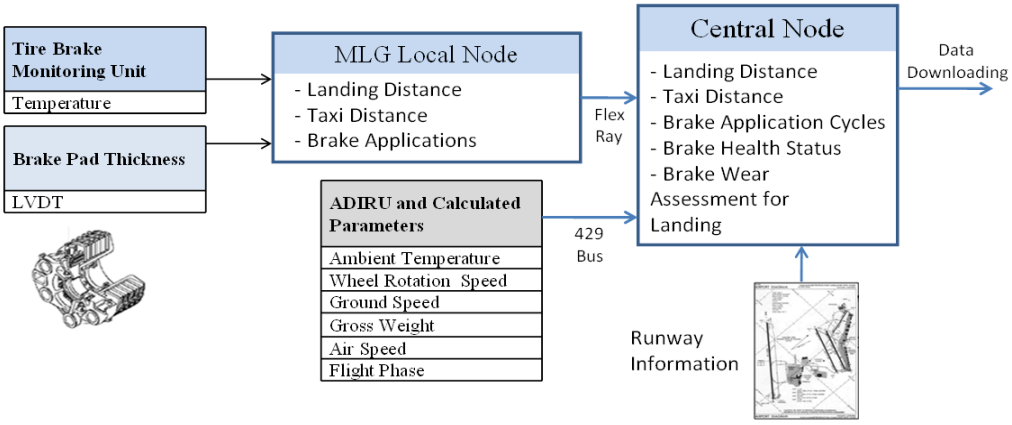

Figure 25. The Brake Monitoring System

In this figure, two key parameters—pad thickness and temperature—are directly measured. Correlation of wear to landing locations and weight would support brake wear prediction.

6.6.2.3 Dedicated, Hybrid, or Shared Design.

Either approach, shown in sections 6.6.2.1 and 6.6.2.2, could be applied to Dedicated, Hybrid, or Shared platforms.

Implementation of approach 2 is recommended in a new design.

The functions to be implemented in the Area and Central Nodes are the following:

- MLG Area or Central Node
  - Brake Wear Estimates (based on landing/taxi distance and brake application for this event (Physics or Data Driven Models))
  - Cumulative Brake Wear Estimate (Arithmetic/Small Model)
  - Brake Health (based on temperature and pad thickness (Arithmetic/Small Model))

6.6.2.4 Application Assessment.

The technology to sense the brake temperature and pad thickness has been developed. Customizing the technology for the SPMS application remains a challenge because of size and reliability.

An RFID-type sensing and communications could be used in either temperature or pin location. The concern would be the reliability of the sensors. Sensor failure cannot be

responsible for a gate delay. Limited compensation can occur through adjusting inspections and basing wear predictions on flight parameters per the first approach.

The value of brake wear prediction would determine how beneficial the application for Dedicated and Hybrid aircraft. The largest benefit may be the application's contribution to increasing the inspection interval for brakes. There is likely more value for larger airplane fleets with electronic maintenance systems in place.

6.6.2.5 Brake Cost-Benefit Analysis.

The brake application had no significant contribution for the Dedicated, Shared, or Hybrid aircraft. This was expected, but the application was considered because, while tire health is the driver, a significant increase in the time between inspections of the tires, brakes, and landing gear cannot be made without addressing brake inspections as well.

6.6.3 Brakes Certification Considerations and Approach.

The brake application would be support-critical. It would provide maintenance with an indication of brake health and remaining life based on brake temperature and pad thickness.

The airworthiness of the additional temperature and pad thickness sensors, data acquisition and processing hardware, and wiring/wireless communications equipment would need to be established. There are few new technologies being introduced except for the pad thickness LVDT, wireless communications, and energy harvesting.

6.7 ENVIRONMENTAL CONTROL SYSTEM SPMS REQUIREMENTS, DESIGNS, COST-BENEFIT ANALYSIS, AND CERTIFICATION CONSIDERATIONS.

6.7.1 The ECS Application Requirements and Description.

The ECS system is distributed throughout the aircraft and consists of a considerable number of components: pneumatic and motor/solenoid driven valves, electrical fans, and heat exchangers. Legacy aircraft make more use of pneumatic valves than more advanced or more electric aircraft.

Due to the large number and high usage of pneumatically-controlled ECS valves, they are one of the most commonly failed components in the air-conditioning systems of legacy commercial aircraft.

It is the goal not only to diagnose ECS component and system health, but to predict RUL for components, to enable opportunistic maintenance.

Heat exchanger performance will be more critical in newer, more electric aircraft designs. Although it is not difficult to detect the existence of a fluid leak, pinpointing the source of the leak is troublesome without the addition of sensing capability. Heat exchanger

fouling and clogging are also common failure modes that are ambiguous in regard to degree and location, thus triggering extended troubleshooting time.

6.7.1.1 Pneumatically-Controlled Valve Prognostics.

A physics-based modeled approach would be applied to valve prognostics [8]. Physics models of valves include damage mechanisms and their effect on valve parameters. The values of the damage parameters can be estimated, and then used in prediction models to estimate remaining useful life. As shown in figure 26, Kalman filters, particle filters, and other statistics-based observers would provide the framework for the prognostics architecture.

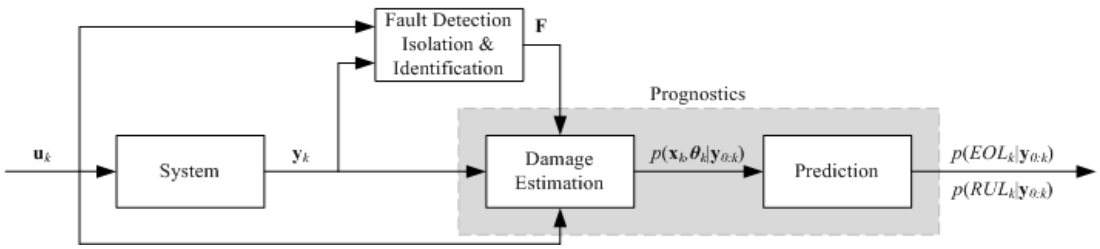

Figure 26. Pneumatically-Controlled Valve Prognosis Architecture

Given known inputs *u*, and measured outputs *y*, the state of the system would be estimated using an observer until a fault was detected by a significant difference between actual and estimated measurements. Fault isolation would produce a set of candidates, *C*. Estimated damage parameters, *D*, would define damage progression over time. The estimated damage and hypothesized inputs (i.e., a number of valve cycles) would compute RUL, based on constraints such as valve open and close times and maximum allowable leakage rates.

Depending on the type of valve, the appropriate sensor monitoring and degradation trending might support opportunistic valve replacement. On legacy platforms, there are not enough sensors used in the system to afford a physics-based approach. Sensors for valve positions and duct pressures/temperatures would have to be added to the system to make this approach feasible.

6.7.1.2 Motor-Actuated Valves.

Electric motor driven valves can be treated similarly to the pneumatically actuated valves. For these valves, the motor current and valve closure times would be monitored to detect variation from the expected signature. Additional information on current ECS system dynamics, such as duct pressures/temperatures, would be needed as with the pneumatic valves.

6.7.1.3 Electrical Fans.

Monitoring electrical fan current can provide an indication of bearing failure or an unexpected output or input flow state that might indicate a failed or incorrect valve position. In new aircraft, the fans may be controlled by a secondary power distribution unit. In that case, the fan current could be monitored from the unit to predict fan anomalies.

6.7.1.4 Heat Exchanger Prognostics.

Heat exchangers are another ECS component that lack sufficient sensor data and would benefit from addition of pressure sensors at the input and output so that a data-driven approach could be employed. This approach would track deviations and associated change rates of pressure measurements as compared to normal operating conditions. Once these features are obtained, they would be trended over the life of the heat exchanger to predict when a failing condition (e.g., fouling) would become a failure.

6.7.1.5 Air Cycle Machines and Compressors.

To determine the health of the air cycle machine and compressor bearings, one or more accelerometers would be added to monitor radial vibration.

6.7.2 The SPMS Design.

6.7.2.1 General Approach.

The ECS consists of the pneumatic and air conditioning systems. The pneumatic system consists of the piping, valves, and control regulators to route the bleed air from the engine through the pre-cooler heat exchanger to (among other systems) the air conditioning and anti-ice systems. The air conditioning system adjusts the temperature of this air and distributes it to the cabin, crew, and avionics cooling.

The pneumatically-actuated valves and the regulators that control these valves operate off pneumatic and electrical solenoids. Electronic monitoring would be limited within the pneumatic system because of the heat of the bleed air. The air conditioning system consists of these same components but also includes: (1) an air cycle machine to compress and cool the air, (2) fans to move the air to various destinations, and (3) various filters to clean the air.

A representative list of the ECS components is provided in table 4.

Table 4. The ECS Components

Air Condition System (Both Left and Right Packs)	
Flow Control Shut Off Valve (Multiple Pneumatic actuators and solenoids)	Trim Air Pressure Regulating and Shut Off Valve (Pneumatic and electrical solenoid controls)
Overboard Exhaust Valve (115 AC, Motor Driven, Position indication)	Trim Air and Temperature Control Modulating Valves
Aft Outflow Valve (electric motor driven)	Pressure Relief Valve (Multiple Pneumatic)
Ram Actuator Air Valve (Motor Driven Actuator)	Primary Heat Exchangers
Temperature Control Valve (2, 115 AC Motor)	Secondary Heat Exchangers
Standby Temperature Control Valve (Multiple)	Circulation Fans
Secondary Heat Exchangers (2)	Exhaust Fans
Air Cycle Machines	Recirculation Air Filters
Primary Heat Exchangers	Air Filters
Cabin Pressure Control (CPC) and BITE	Low Flow Sensors
Right and Left Pack /Zone Controllers	
Pneumatic System	
High Stage Bleed Air Valve	Pressure Regulating and Shutoff Valve
High Stage Regulator	Bleed Air Regulator
Bleed Air Controls	

The primary causes for the delays in the pneumatic system are the high stage bleed air, pressure regulating and shutoff valve, and the regulators that control these valves.

The primary air conditioning components contributing to gate delays are the air-cycle machine, valves, and flow sensors.

On legacy aircraft (Dedicated or Hybrid), the ECS monitoring can be sparse because of the high temperature environment. The air conditioning system has temperature, pressure, and low-flow sensors. The approach would be to detect and compensate for faults in the air by adjusting ECS controls. Fault diagnostics is currently a ground-based manual process where the maintainer looks at visual valve position indicators. This effort does not address ECSs that do not use bleed air but are electrically powered (i.e., Boeing

787). The SPMS designs and technologies presented for the Shared platform would be applicable to the new generation system based on bleed air.

The ECS consists of a number of relatively simple components that contribute to the operation of the large, distributed system. The spectrum of possible approaches to improve ECS HM ranges from evolutionary improvements to onboard diagnostics, through revolutionary redesign, including instrumentation of individual ECS components and prognostic algorithms tailored to each individual component.

The implementation of prognostics for such components as a valve would mean developing health indicators for these components that, if trended over time or usage, could be used to predict the progress of degradation and trigger maintenance prior to failure.

A major element of the improved ECS diagnostics would be a system level diagnostic model (pneumatic and air conditioning) to leverage the available data and account for the propagation of fault effects across the system. The system diagnostics could be implemented using a discrete model-based reasoner. A representative reasoner would be the Timed Failure Propagation Graph developed by Vanderbilt University [9].

Lower level monitors detect changes in various system states and report unexpected behavior. The monitors output a discrete indication that a threshold or condition has been reached. The reasoner, using dependence or fault propagation models, identifies the underlying root cause of the anomalous behavior (i.e., by diagnosing the problem).

Most of the control inputs, such as Cabin Pressure Controls (CPC) and Built-in Test Equipment (BITE) for the CPC in Legacy/Dedicated aircraft are available on an ARINC 429 bus. Access to these data would require tapping into the appropriate bus to route the data to an HM Node.

A more comprehensive approach would be to use a higher fidelity parametric modeling paradigm that is essentially a simulation of the ECS that can detect and track variations in parametric values of pressure, temperature, and air flow (valve positions). The parametric variations would trigger modifications of the system model in order to duplicate the characteristics of the degraded system [10]. Once the cause of the degradation was identified, the system level model would be updated and the degradation would be continually tracked.

To this model, prognosis of individual ECS components could be added. Prognosis of ECS component faults would be based on the monitoring of individual components, such as pneumatic or motor driven valves, air cycle machines, heat exchangers, regulators (pressure and electrical solenoid activated), and recirculation fans. The block diagram of this approach is given in figure 27.

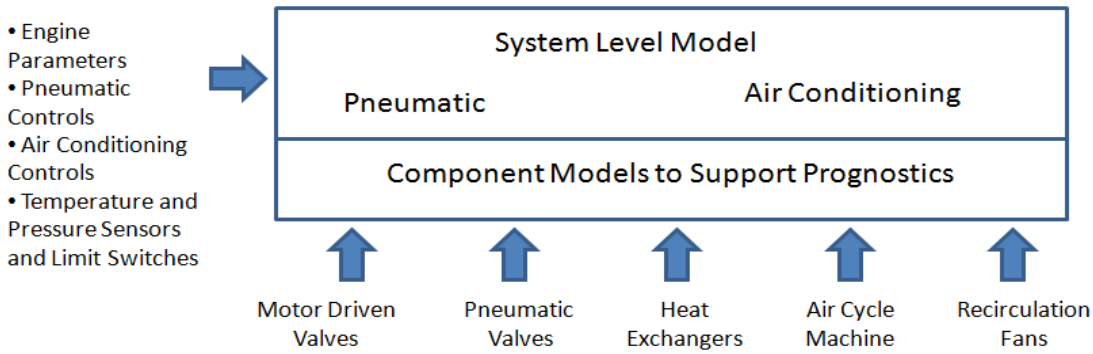

Figure 27. The ECS Health Management System

Health indicators for the various components could be computed at the Local Health Node or Central Health Node and downloaded to be integrated with historic data, trended and health predictions. Prognostic models report degradation of the individual components to augment the system level reasoning process.

6.7.2.1.1 Pneumatic and Motor Driven Valves.

Legacy systems typically do not monitor valve positions except for key valves such as those used in pressure control and outflow.

Prediction of valve failure is typically based on departures from the signature transition profile (i.e., time versus force applied). In the case of the pneumatic valve, a pressure differential drives a pneumatic actuator to close the valve. Slow closure or opening, given the expected pressure differential, is interpreted to be an indication of the onset of failure due to corrosion or the presence of foreign material. Similarly, motor driven valves would have a consistent opening or closure current and time signature. The valve position can be provided as an open or closed indication or provided as a continuous parameter. Ideally, a 20Hz position versus force profile would be provided. It is not known how well failure could be predicted from these models. The monitors would provide accurate, clear diagnostics for the valve. Such models have been implemented for motor driven fuel valves that have similar characteristics. A family of transition curves is shown in figure 28, where fuzzy logic was used to grade the transitions and generate a health indicator. A depiction of the fuzzy sets used in the decision process is shown in figure 29.

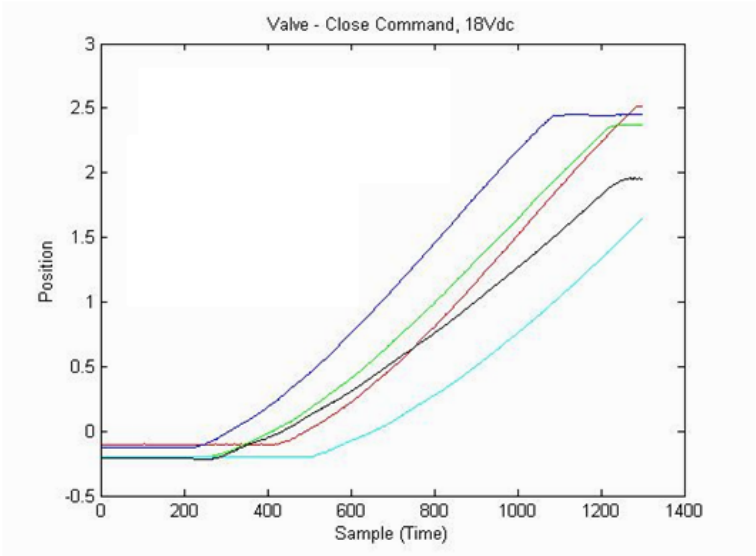

Figure 28. Fuel Valve Characteristic Transition Signatures

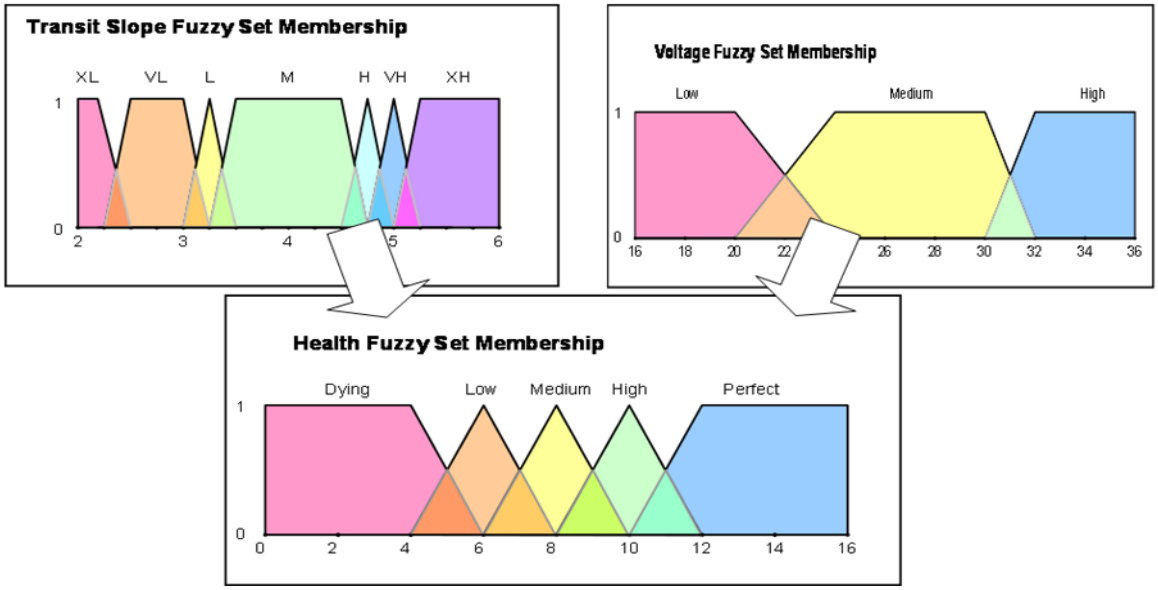

Figure 29. Fuzzy Sets Used in Generating Valve Health Indicator

Modulating valves are controlled to a certain position and can dither about a given position and wear out in a very small range of motion.

Valve monitoring in the pneumatic system is challenging because of the heat of the bleed air. Under high temperature conditions, electronics would have to be located remotely and insulated from high temperature components. In current designs, the valve control in the pneumatic system is remotely located in regulators away from the controlled valves. To sense valve position, encoders may have to be replaced by open and closed limit switches. The loss in predictive capability would be lessened but it is believed that the indication of irregular or slow closures could be detected and trended. Technology for

high temperature (>600°C) MEMS temperature, pressure, and flow sensors is currently being developed.

Generally, the monitoring of pressure, current, or air temperature would have to be done by inserting the sensor in a series with existing plumbing or wiring. For example, pressure sensors would be incorporated in regulator lines (see figure 30).

Existing limit switches within the pneumatic system could be replaced with this same capability, but with an additional MEMS parametric sensor added to the package to reduce the impact of boring an additional access hole.

While the pressure and valve position would have to be sensed on or near the valve, an efficient approach to valve monitoring may be to locate the sensing, processing, and communications interface in a Local Health Node on the valve itself (with temperature constraints). The valve design would be updated to include this optional Local Health Node as part of the valve installation.

The Local Health Node interface for the general case, pneumatic and motor actuated with pneumatic and electrical solenoid control is shown in figure 30.

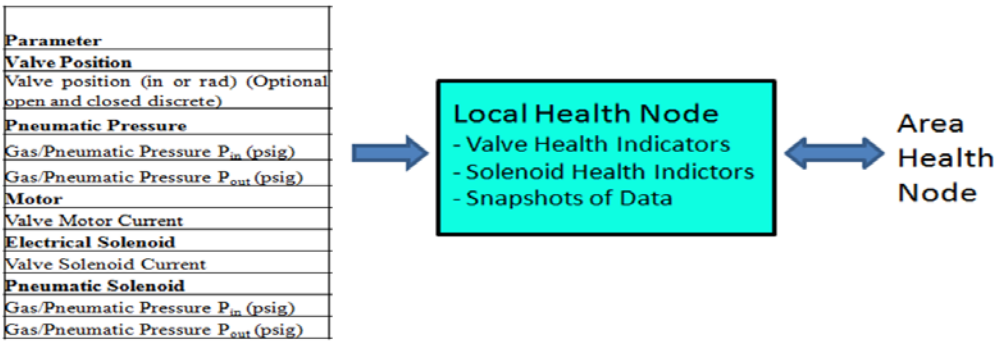

Figure 30. Local Health Node for Motor Driven or Pneumatic Valve

It may be possible to power the Local Health Node by energy harvesting and communicating results over a wireless network. This approach would make the Local Health Node self-sufficient and reduce the complications of changing drawings for wire power or communications. Considerations in using a wireless approach would be the power needed by the sensors, the duty cycle of the data acquisition, and the approach to energy harvesting. The Local Health Node functionality could be restricted to communications of the data collected for one collection period.

Whether the interface was wired or wireless, it is believed that the ECS system model, as described in section 6.7.2.1.1, would trigger the monitoring based on awareness of state changes and likely fault propagation. The command to collect data would need a guaranteed responsiveness from the system level to the Local Health Node to ensure the appropriate data were collected. A mixed approach that uses both wired and wireless

Local Health Nodes would be the likely compromise, depending on the density of the local monitoring demands of the ECS components described below:

- Air Cycle Machine—The air cycle machine consists of a turbine motor and compressor. The major fault mode is the degradation of the air bearings. These bearings would be monitored using two accelerometers with a relatively high sample rate to support a 3-day prediction horizon.

- Recirculation and Exhaust Fans—Heat and clogged filters can load fans and cause motor failure. A degraded motor condition can be monitored from motor current and temperature. With a self-contained Local Health Node, the node could be powered by energy harvesting driven by the fan current or by directly tapping the fan power. Historically, these fans rank low on the list for gate delays or maintenance problems.

- Heat Exchanger—Heat exchangers can be monitored from the differential pressure and temperature across the inputs and outputs. The heat exchangers in the air conditioning system do not rank high for maintenance delays.
- Regulators—Regulators can be monitored by comparing expected temperatures and pressures of air flow to the actual temperatures and pressures. A common fault mode is blockage in the regulator lines. Stand-alone regulators and regulators mounted with the valves can have both pneumatic and electrical solenoid control. Electrical solenoid health is determined by monitoring current, time, and resulting differential pressures. Similarly, pneumatic control health is determined by monitoring differential pressures and time.

6.7.2.2 Design Trades and Recommended Designs.

Independent of the baseline vehicle type, the first level of HM for the ECS would be to implement onboard diagnostics that can be forwarded to the aircraft destination to reduce turn-around time. At the basic level, the ECS diagnostics could be achieved by implementing a discrete system level reasoner. Further diagnostic resolution could be achieved by implementing pressure and temperature sensors at selected points. This could be advanced to a system capable of prognostics by additional monitoring of individual components (specifically, valves). A range of possible HM systems are described for the pneumatic and air conditioning system in sections 6.7.2.2.1 and 6.7.2.2.2.

6.7.2.2.1 Pneumatics.

In the pneumatic system, pressure sensors could be installed to determine the state of the major valves. One pressure sensor could be located after the Precooler Valve and two or three located to determine the state of the High Stage Valve and Pressure Regulator and Shutoff Valve (PRSOV) along with knowledge of the engine speed (N1). The high stage valve opens when the engine is at low rpm. Detailed analysis of the various states would be needed to produce an optimum configuration. Pressure sensors would be located in

the high stage and bleed air regulators to monitor the pressure on the engine side of the high stage and PRSOV valves. On the downstream side of the PRSOV, it may be cost effective to implement a pressure sensor isolated from, but using the same opening as, the existing over-temperature switch to minimize change impact.

Prognostics to achieve predictive maintenance would require developing models to generate health indicators for the significant components that can be trended and the projected level of degradation with use. The significant components in the pneumatic system are three pneumatic valves (Precooler, PRSOV, and High Stage) and the two regulators. The Bleed Air Regulator has a 28 VDC solenoid activated by crew controls. Given the high temperature environment, the beneficial approach would be to monitor valve position with open and closed contactors, transition time, and pressures from the regulators using a wired system. Similarly, the current and response of electronics solenoids can also be monitored. A top-level schematic of such a monitoring system is shown in figure 31.

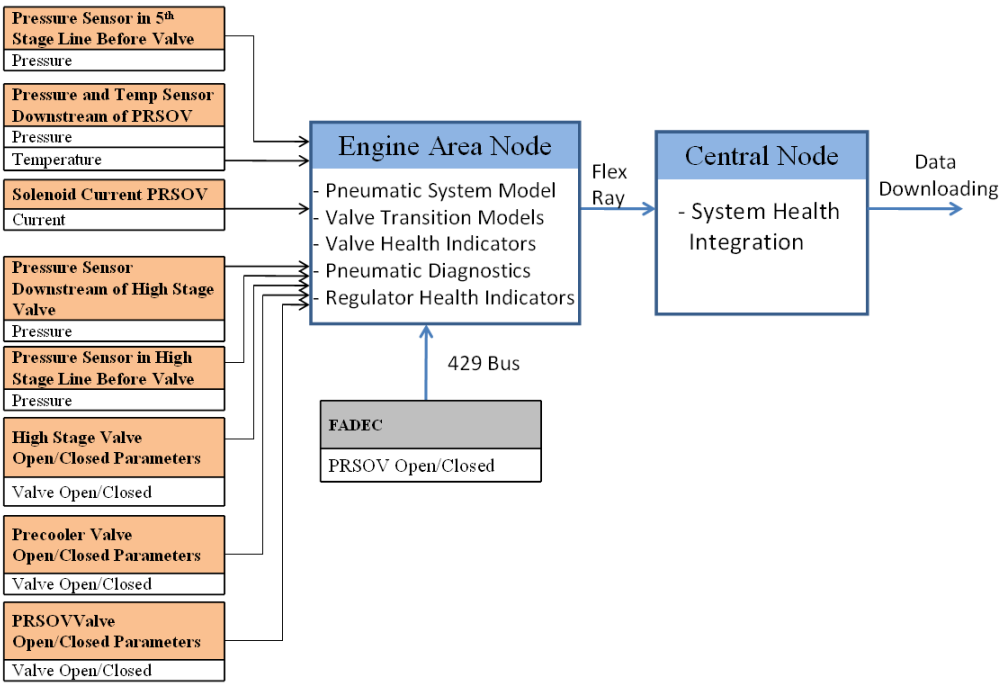

Figure 31. Pneumatic Dedicated HM Design With Prognostics

The Local Health Node would capture profiles of pressure versus valve position (or solenoid current) as well as pneumatic system states and compare to reporting criteria and transmit selected cases to the ECS Area Node via the Engine Area Node. The reporting criteria would be based on degree of degradation and variation from nominal or expected states. The arrow is going two directions to show reporting criteria coming from the ECS Area Node.

The system, shown in figure 31, can be reduced to a diagnostic approach by eliminating the valve positions and solenoid current monitoring. As part of the cost-benefit trade, the

cost of the additional monitoring will be weighed as a function of benefit versus cost to implement and support.

The functions associated with the pneumatic application and located in the Engine Area Node are the following:

- PRSOV Pneumatic Valve Transition Model (Arithmetic/Small Model)
- High Stage Bleed Pneumatic Valve Transition Model (Arithmetic/Small Model)
- Precooler Bleed Pneumatic Valve Transition Model (Arithmetic/Small Model)
- PRSOV Pneumatic Valve Health Indicator (Arithmetic/Small Model)
- High Stage Bleed Pneumatic Valve Health Indicator (Arithmetic/Small Model)
- Precooler Bleed Pneumatic Valve Transition Model (Arithmetic/Small Model)
- Bleed Air Regulator Response Model (Arithmetic/Small Model)
- High Stage Regulator Response Monitor (Arithmetic/Small Model)
- Pneumatic System Model (Large Logical Constructs/Reasoner)
- Pneumatic System Diagnostic Model (Large Logical Constructs/Reasoner)

The functions listed above were developed for the Dedicated platform and apply, in principle, to the Hybrid and Shared system. In the Hybrid and Shared platforms, the PRSOV is a motor-driven valve and data on valve position are available on avionics buses. The compatibility of these data to support prognostics is being investigated. In the Shared platform, it is likely that the power for this motor would be controlled by a power module near the engine valve. Ideally, the power signature for motor closure would be captured by a health monitoring capability within the power module and reported to the ECS node. Otherwise, the motor current would be captured locally.

6.7.2.2.2 Air Conditioning.

A beneficial approach to monitoring the health of a number of simple components is the use of wireless networks and health nodes using MEMS sensors. A family of local nodes powered by energy harvesting and capable of monitoring temperature, pressure, valve position, and current could be configured to monitor each type of component. Each node would be part of a network and be activated based on the above system model running in the master node to collect and transmit data on its component/LRU. Data samples would be taken for selected scenarios that could be representative of steady state or state transitions (i.e., valve transitions and subsequent pressures and temperature changes across the system). The master Air Conditioning Area Node would manage data acquisition and the energy available at the local nodes. Depending on the application, energy harvesting would be based on the temperature, vibration, or power.

For the Dedicated platform, the control selections from the CPC and Right and Left Pack/Zone Controllers would be accessed by tapping into the ARINC 429 bus.

Two additional temperature sensors would be added to monitor the incoming ram air and bleed air from the pneumatic system. The following components would be monitored to support predictive maintenance:

- Air Cycle Machines
- Flow Control Shut Off Valves
- Trim Air Pressure Regulating and Shut-Off Valves Trim Air and Temp Control Modulating Valves
- Aft Outflow Valves
- Ram Actuator/Air Valves
- Temperature Control Valves
- Temp Control Air Modulating Valves

Listed below are other components that have less impact on delays may be considered further in the cost-benefit analysis:

- Overboard Exhaust Valve
- Standby Temp Control Valves
- Pressure Relief Valve
- Circulation Fans Primary Heat Exchangers
- Secondary Heat Exchangers
- Exhaust and Recirculation Fans
- Air Filters

A representation of the overall system design for a Dedicated platform is shown in figure 32.

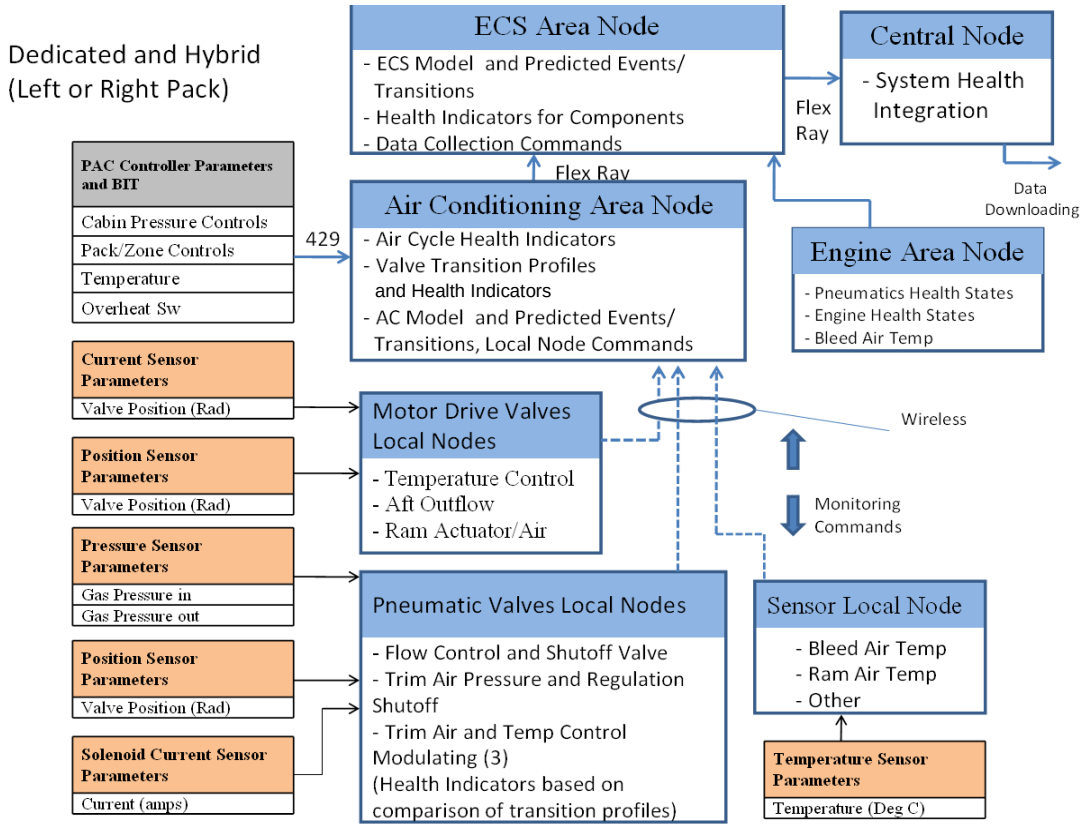

Figure 32. Dedicated ECS (Air Conditioning and Pneumatics) HM Design

The physical location of the Air Conditioning Node would be near the Air Cycle Machine. The local monitors for the valves would be located on the subject valve. Energy harvesting for each node would have to be determined. The likely energy source would be temperature for steady state operation. Some local nodes may draw small amounts of power from the alternating current (AC), DC solenoid, or motor power during transition. The local node needs power to anticipate valve transition.
The pneumatic pressures monitored by a local node could also be used in the ECS model to better diagnose system problems independent of the estimation of valve health indicators for prognostics.

The following are the functions associated with determining the health of pneumatic valves:

- Transition Models (Arithmetic/Small Model)

  - Flow Control and Shutoff Valve
  - Trim Air Pressure and Regulation Shutoff
  - Trim Air and Temperature Control Modulating (quantity of three)

- Health Indicator (Arithmetic/Small Model)

    - Flow Control and Shutoff Valve
    - Trim Air Pressure and Regulation Shutoff
    - Trim Air and Temperature Control Modulating (quantity of three)

The following are the functions associated with determining the health of the motor-driven valves:

- Transition Models (Arithmetic/Small Model)

    - Temperature Control Valve
    - Aft Outflow Valve
    - Ram Actuator/Air Valve

- Health Indicator (Arithmetic/Small Model)

    - Temperature Control Valve
    - Aft Outflow Valve
    - Ram Actuator/Air Valve

The following are the functions associated with the air cycle machine health:

- Air Cycle Signal Processing (Transforms)
- Air Cycle Health Indicator Generation (Physics or Data Driven Models)

The following are system level functions at the air condition pack level:

- System level model of air condition system (Physics or Data Driven Models)
- System level diagnostic model (Physics or Data Driven Models)
- System Controller and Node Management (Large Logical Constructs/Reasoner)

The following are system level functions at the ECS level are the following:

- System level model of the ECS (Large Logical Constructs/Reasoner)
- System level diagnostic model (Large Logical Constructs/Reasoner)
- System Controller and Node Management (Large Logical Constructs/Reasoner)

The major difference in the Dedicated and Hybrid platforms is that more data are available on ECS controls and more valves are motor-driven. The sampling rates and usefulness of this data are being assessed. This would impact the type and number of local nodes, but the overall approach would be the same.

6.7.2.3 Application Assessment.

The key factors in this application that are not well known are:

- Immaturity of high temperature pressure, temperature, and flow sensors for monitoring the pneumatic system.
- Reliability of local wireless nodes is slowly being addressed by industry.
- Effectiveness of prognostics on valves and regulators, especially if only an open/closed indication is available.

6.7.3 Air Conditioning and Pneumatic Cost-Benefit Analysis.

The air conditioning and pneumatic system are both distributed, complex systems whose main components are pneumatic and motor-driven valves. The difference in the two applications is the operating environment. The bleed air in the pneumatic system is hotter as is the environment of the engine nacelle.

6.7.3.1 Pneumatic Cost-Benefit Analysis for Dedicated Aircraft.

The pneumatic system is a complex system that currently has little online monitoring, primarily due to the harsh conditions in the engine bay. These harsh conditions drove the design to use wired, rather than wireless, communications between the sensors and the engine data concentrator. The resulting CBA for the pneumatic system produced a moderate to high gain in NPV based primarily on scheduled interruptions, with some contribution due to reduction in NFF.

6.7.3.2 Pneumatic Cost-Benefit Analysis for Hybrid Aircraft.

The pneumatics CBA results for Hybrid aircraft show a small gain based on the reduction or avoidance of schedule interruption (SI), with a small contribution due to a reduction of maintenance costs associated with NFFs. The rate of SIs is lower for the longer haul aircraft while the NFF rate is similar. Since SIs are the dominating factor, the gain for Hybrid application is significantly less than that for the Dedicated aircraft.

6.7.3.3 Air Conditioning Cost-Benefit Analysis for Dedicated Aircraft.

It is estimated that a high percentage of the faults that lead to SIs can be predicted and avoided. The CBA produced a net loss in NPV. In comparison to the pneumatic system, the net loss is due to the greater weight of the application since the pneumatic system data concentrator is pooled between engine applications and the greater cost of the SPMS hardware for the application. The greatest cost is the production cost of the air condition application, which is greater than that of the pneumatic system. Also, the production costs are taken up front, which converts to a decrease in the NPV.

The monitoring being performed in the air conditioning application is based on valve position versus valve open/closed timing in the pneumatics application. In this comparison, both applications are assumed to prognose a high percentage of the faults associated with SIs. Reducing or increasing the percentage of the SIs would roughly impact the gain linearly. The cost of production and weight of the air conditioning application would have to be significantly reduced to show a significant positive result.

6.7.4 The ECS Air Conditioning Cost-Benefit Analysis for Hybrid Aircraft.

The CBA results for the air conditioning application in the Hybrid aircraft are scaled to the smaller fleet, but similar in payoff.

6.7.5 The ECS Certification Considerations and Approach.

The airworthiness and hazard potential of the additional temperature, pressure, position, accelerometer sensors, data acquisition, and wiring to the sensors would need to be established. This hardware would have to be shown not to impact safety of flight. All sensor types have been used in aircraft previously except for the pressure sensor. Pressure monitoring in high temperature environments, such as engines, could be accomplished by running tubes from the area of interest to the engine control unit. Introducing this technology in a support-critical role could benefit engine HM and control.

The onboard HM software would be run in the local node, air condition, or engine data concentrators and also in the central node partitioned from any flight critical software for all baseline aircraft.

During a trial test period, the effectiveness of the support-critical prognostic capability could be established by comparing its output with the condition of removed LRU.

6.8 GENERATOR SPMS REQUIREMENTS, DESIGNS, COST-BENEFIT ANALYSIS, AND CERTIFICATION CONSIDERATIONS.

6.8.1 Generator SPMS Application Requirements and Description.

Major failure modes for integrated drive generators (IDGs) include winding, diode, bearings, and hydraulic system if the generator is a constant speed IDG. Technology has demonstrated to predict bearing and hydraulic system failures in the drive units. Prognostics or usage-based life-ing methods may also be available in the near future for winding and diode failures. The goal in the application is to implement prognostics for generator bearings as well as for the diodes.

The generator is a sophisticated control system that regulates its output to satisfy the aircraft loads. The generator system includes a Generator Control Unit (GCU), the electrical generator, and the drive unit that mates to the engine. Voltage regulation is performed by controlling the field exciter current. The SPMS approach to detect diode or winding faults/degradations are typically physics-based methods. Bearing

faults/degradations are detected and classified by processing accelerometer or acoustic data. There are claims in the literature of being able to detect bearing failures from the electrical signatures. For this report, we will assume an IDG and address winding, diode, bearing, and hydraulic faults/degradations. Bearing failures will be monitored using vibration data produced by an accelerometer.

6.8.2 Generator Design.

Major failure modes for the IDG include windings, rotating diodes, main bearings and drive gears in the generator drive, and the constant speed drive assemble. Shown in figure 33, the IDG is mounted on the engine accessory drive. The constant speed drive consists of a positive displacement pump, swash plate, governor, and planetary gear assembly that compensates for variations in engine speed. The constant speed drive and main bearings rank as the top causes for delays associated with the generator and will be the focus of the SPMS design. The Dedicated and Hybrid aircraft use such generators, while the Shared platform will be assumed to use a similar design.

The data available in the Dedicated platform are discrete Built-in Test (BIT) codes for low oil pressure and an IDG fault light for any of the following conditions: under frequency, over frequency, shorted diodes, and under voltage. The Hybrid platform detects the following IDG faults: over/under voltage, over/under frequency, differential fault, open phase, diode failure, and unbalanced circuit. It reports a BIT indication for oil filter delta pressure, oil pressure, IDG over temperature, and oil level. The IDG inlet and outlet oil temperature, frequency, and voltage based on an average of the three phases are available on later model Hybrid platforms.

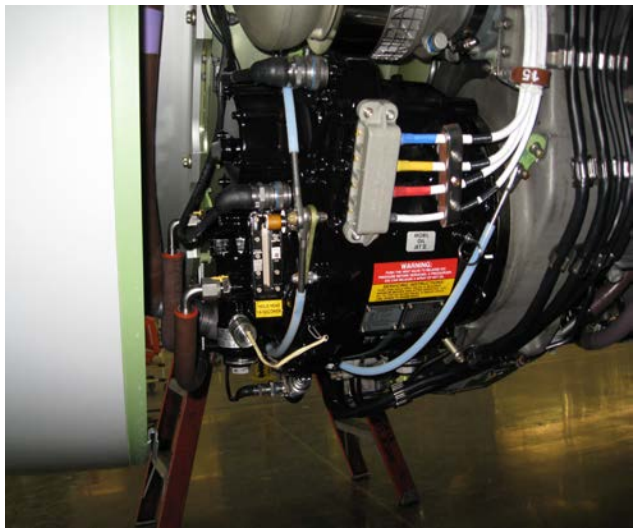

Figure 33. The IDG Mounted on Engine Accessory Drive

With the Hybrid platform, a simple approach for estimating the general health or efficiency of the IDG could be done by monitoring N1, oil temperature, and power output. For steady-state conditions, the same engine speed and oil temperature should produce the same power output.

Beyond this general health metric, three technologies are investigated for detecting and prognosing IDG faults: vibration monitoring (using accelerometers), ODM, and analysis of electrical signals. The applicability of each of the technologies is provided in table 5.

Table 5. Technologies to Monitor Generator Health

Component Faults/Degradation	Oil Debris/ Quality	Accelerometers	Electrical Signals	HM Capability
Constant Speed Drive journals and gears	Detection of particles by type	Vibration		Prognosis
Constant Speed Drive Hydraulics (pump degradation)	Detection of particles by type	Vibration	Frequency shift	Prognosis
Main bearings and drive gears	Detection of particles by type	Vibration	Eventual frequency shift for main bearing	Prognosis
Winding/Insulation Degradation	Residue in oil			Prognosis
Winding opens/shorts Diode Rectifiers			Characteristic signatures	Diagnostics

Oil debris/quality and temperature sensing would support: (1) the detection of journal and hydraulic pump wear in the constant-speed drive as well as main bearing and gears from particle analysis and (2) the detection of winding degradation from residue in oil. Generator oil is now manually collected and analyzed, thus oil debris monitoring would eliminate the need for oil analysis and provide continuous coverage of generator health. Locating the oil debris monitoring system outside the generator by using existing piping would be straightforward. Accurate placement of an in-line sensor should allow ODM functionality without impacting the generator or IDG. Such technology may reduce the need for additional sensors, by detecting mechanical failures through monitoring electrical signals, but this could not be confirmed.

Vibration monitoring would target the main generator bearing degradation and the degradation of the constant-speed pump and drive gears. The likely location for the accelerometers would be on the case near the main shaft. For the bearing facing the accessory drive, mounting the accelerometer may require access through the current joint between the IDG and accessory drive.

Analysis of the generator electrical signals (output phase currents and exciter control signals) would detect a change in drive speed due to degradation in the constant speed mechanism, which should show up as a frequency oscillation. In the Dedicated and Hybrid platforms, these data are not typically available in digital form on an avionics bus. These signals could be acquired by inductive monitoring at the IDG or at the GCU. It may be best to acquire this data outside of the IDG or GCU than modify the internal GCU designs.

There are some fledgling technologies that may eventually support prognostics or usage-based life-ing methods for rotating diodes. However, due to reliability of the diodes and maturity of these technologies, this area was not pursued.

Due to the coverage of the above technologies, a configuration consisting of oil debris and vibration monitoring may be the best choice. It is reasonable to conclude that, at least, a 3-day prediction horizon could be attained for IDG constant speed drive and main bearings.

There are numerous alternatives for powering the added sensors and communicating and processing the data generated. An obvious choice to power the oil debris and accelerometers (along with an associated processing and interface electronics) would be to scavenge power through the existing main power lines from the generator.

The oil debris sensor and accelerometers would require local processing at the IDG or some means to communicate these data to other HM processing nodes located elsewhere on the engine or remotely in the avionics bay.

6.8.2.1 Design Trades and Recommended Designs.

6.8.2.1.1 Dedicated and Hybrid Configuration Designs.

Two types of configurations are considered for the Dedicated and Hybrid baseline, one which assumes that an engine area node is available to the application and a second where no such node is available. In both cases, the HM capability is based on oil debris and vibration monitoring. This would cover the major fault modes without accessing the electrical control and output signals of the generator.

An opportune place to install the ODM would be with the oil heat exchanger. A modified heat exchanger could be installed that contained the ODM system and temperature sensor (if needed) and would not involve modifications to the generator itself. The interfaces for this configuration are shown in figure 34.

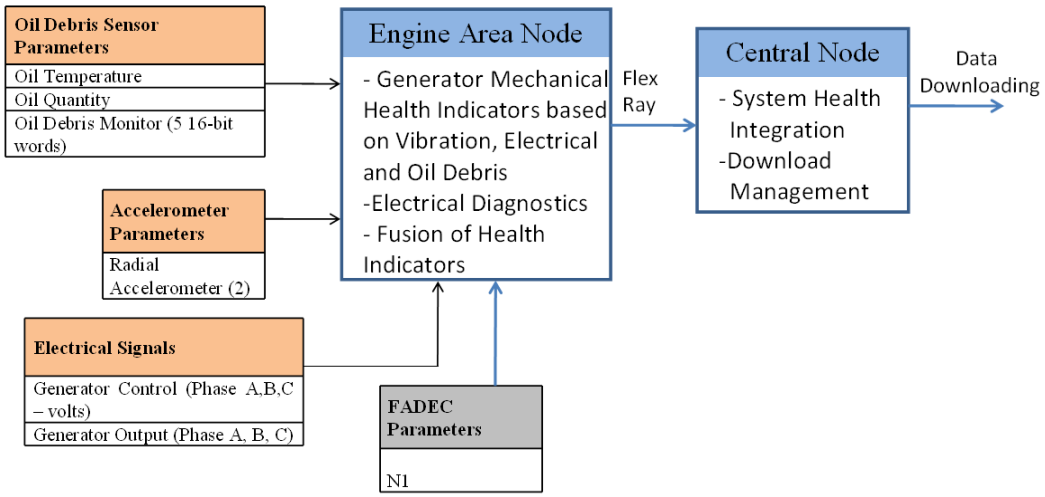

Figure 34. Interfaces for Dedicated and Hybrid Platform With Engine Area Node

The accelerometer and oil debris sensor would interface directly with the Engine Area Node.

The following are generator HM functions in the Engine Area Node:

- Accelerometer data processing (Transforms)
- Oil Debris, temperature, and quantity data processing (Arithmetic/Small Model and Filters)
- Vibration Health Indicator (Physics or Data Driven Models)
- Oil Debris Health Indicator (Arithmetic/Small Model)
- Fusion of Health Indicators (Filters)
- Diagnostic Model (Large Logical Constructs/Reasoner)

An alternative approach would be a local node located on the generator that would interface with the sensors, perform initial processing of the accelerometer data, manage the frequency of data collection and processing, and transmit the results to another health node. The Local Health Node would be powered by power line energy scavenging. In the case where an Engine Area Node was available, the local node would transmit the results to the Engine Area Node either through wired or wireless communications. In the case where an Engine Area Node is not available, the local node would communicate the accumulated results to other areas or maintenance entity.

6.8.2.2 Shared Configuration Designs.

In the Shared system, acquiring generator electrical signals could be obtained by specifying a design that is created for signal capture and conversion while providing the desired output. Higher data rate control and power output signals could be captured and processed. A wireless network could be set up within the engine nacelle to support the generator application as well as other HM applications. The electrical signals would consist of the generator control Phases A, B, and C voltages and the generator output currents for Phases A, B, and C. The Shared system is shown in figure 35.

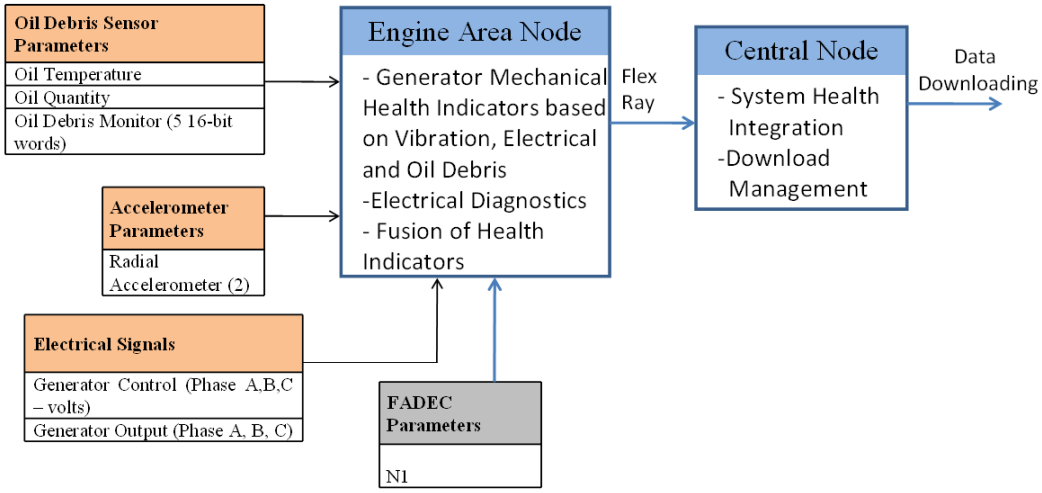

Figure 35. Interfaces for Generator HM Shared Platform

The additional functions added to the Engine Area Node for the Dedicated and Hybid platforms would be electrical signal processing (Transforms), health indicator estimation based on electrical signals (Physics or Data Driven Models), electrical system diagnostics (Large Logical Constructs/Reasoner), and a generator diagnostic model (Large Logical Constructs/Reasoner).

6.8.2.3 Application Assessment.

In the case of Dedicated and Hybrid platforms, if the generator application was not able to leverage existing infrastructure to communicate data back to a central node, the communication link from the generator to the central node would have to be accomplished with minimal expense. The most simple approach would be to run a data bus such as ARINC 429 or ARINC 485 from the avionics bay to the engine area. This approach should be traded with other communications approaches such as wireless, which may add less weight but carries technical risk, and would require additional certification.

The engine area is a challenging environment for electronics due to heat and vibration. Health nodes located on the generator or elsewhere would have to be tolerant of the ambient heat and vibration.

The IDG is highly reliable for the Dedicated and Hybrid platforms due to a number of design changes. While the IDG still appears as a higher driver for delays, its reliability has been improving over time.

6.8.3 Generator Cost-Benefit Analysis.

6.8.3.1 Generator Cost-Benefit Analysis for Dedicated Aircraft.

Based on this assessment of the impact of SPMS technology, the estimated impact of SPMS technology on the generator was that a modest percentage of the SIs could be predicted and avoided.

The results were surprisingly good due to significant maintenance savings, in addition to avoidance of SIs. Typically, the CBA inputs provide for a reduction in Retest OKs (RTOKs) at the depot level. Reducing RTOKs is valued by assigning a percentage of the LRU cost to the RTOK maintenance event.

The takeaway from this application is that the value of the LRU can have a significant impact on the benefit of the application, particularly if the LRU is expensive.

6.8.3.2 Generator Cost-Benefit Analysis for Hybrid and Shared Aircraft.

The cost-benefit results for the generator application for the Shared aircraft are expected to be similar to those for the Hybrid aircraft. The slightly higher production and development cost is the result of the shared expense of the engine data concentrator being spread over fewer applications.

6.8.4 Generator Certification Considerations and Approach.

The generator application would be support-critical. It would provide diagnostic and prognostic recommendations to maintenance personnel. The airworthiness of the additional sensor, data acquisition and processing hardware, and wiring would need to be established. New technologies would not be introduced. All of these sensor types have been approved for use on commercial aircraft.

The onboard HM software would be run in an engine data concentrator and central node, partitioned from any flight-critical software for all baseline aircraft.

During a trial test period, the effectiveness of the support-critical prognostic capability could be established by comparing the HM results to depot-level testing of generators that have been removed from aircraft.

6.9 HARD LANDING SPMS REQUIREMENTS, DESIGN, COST-BENEFIT ANALYSIS, AND CERTIFICATION CONSIDERATIONS

6.9.1 Hard Landing SPMS Application Requirements and Description.

Algorithms that estimate the loads in landing gear, undercarriage, and critical aircraft structures (based on aircraft dynamics) do exist. These algorithms can register a landing as a hard landing and direct maintenance personnel to the appropriate areas to be inspected. Additional processing may provide a usage-based estimate of RUL for structural components. This capability eliminates unnecessary inspections and reduces inspection times when they are prescribed, thus reducing aircraft downtime and SIs. The method does not require the addition of sensors, as the necessary data are available from the flight instrumentation and control functions. Extending this concept with strain gages may enable automatic computation of aircraft weight as well as a means to provide a more accurate calculation of landing gear life.

Hard landing detection/diagnostic of undercarriage, landing gear, and other critical structures is a high payoff area that requires no additional sensing, but may benefit from an additional sensor depending on the application. The method promises to provide usage-based life-ing for the landing gear that may be more accurate with strain sensors. The addition of sensors could be used to determine aircraft weight and support more efficient aircraft operations.

6.9.2 Hard Landing Design.

Currently all (anything above maximum landing weight) hard landings require an operator to perform a Level 1 inspection. Hard landing determinations are currently made solely by the pilot. In most cases, the inspection time causes the airplane to be taken out of revenue service, which causes schedule disruption in addition to the cost of inspection.

The hard landing application would provide a determination of a hard/heavy landing based on aircraft dynamics and/or strain on structural components. The goal would be to quantitatively indicate a hard landing so to reduce false indications of hard landings, play a role in avoiding the practice of dumping fuel to prevent the consequences of an overweight landing, and reduce the resulting inspections of a hard landing by identifying a minimal set of necessary inspections. This application would greatly reduce the chance of a missed detection and more accurately identify the degree the maximum landing weight was exceeded.

Based on the following, there are a range of approaches with varying levels of required input/sensor data, data acquisition installations, and benefits, including hard landing:

- Flight dynamics data and model
- Flight dynamics data and model that are augmented with sensor data to further reduce false positives

Additional applications that would collaborate with hard landing detection include structural HM, landing gear life-ing, and accurate weight estimation. These capabilities will be described and mapped to the Dedicated, Hybrid, and Shared platforms.

6.9.2.1 Hard Landing Based on Flight Dynamics.

Hard landing determination can be based on analysis of flight data that are available on the data bus for all vehicles. The Hard Landing Analysis System studied would perform post-landing analysis of the following data available from the flight data computer: gross weight (GW), sink rate, pitch angle, roll angle, roll rate, initial center of gravity (CG) normal load factor, and peak CG normal load factor.

Flight data to support hard landing determination are listed below:

- Parameter
- Vertical Sink Rate
- Pitch Angle
- Roll Angle
- Roll Rate
- Initial CG normal load factor
- Peak CG normal load factor
- GW

6.9.2.2 Hard Landing Augmented With Sensor Data.

Any approach based solely on flight dynamics data would suffer because the data could not explicitly include any information regarding the transient dynamic response of the structure to the landing impact. The transient response is becoming increasingly significant as the size of the aircraft increases. One approach for including the transient dynamic response effects would be through the use of accelerometers and strain gages.

Likely locations for these sensors are the high load areas on the main landing gear structures, engine pylons, and in the front and rear of the aircraft. The fuselage-mounted strain sensors would primarily detect fuselage bending response.

6.9.2.2.1 Synergistic Applications.

Certain applications, namely Structural Health Monitoring (SHM), Landing Gear Life-ing, accurate GW, and CG calculations, are synergistic with the implementation of hard landing and were considered in the trade study.

6.9.2.3 Design Trades and Recommendations.

The major factors in selecting a design approach for the Dedicated, Hybrid, or Shared architectures are: hard landing data availability, implementation costs, accuracy, multiple use, and Dedicated and Hybrid platforms.

6.9.2.3.1 Hard Landing Data Availability.

It is beneficial to generate an immediate assessment of hard/heavy landing in order for the maintenance personnel to react quickly for maximum benefit. This would require the data to be processed onboard or offloaded as the aircraft taxies and the computation is performed expeditiously on the ground.

6.9.2.3.2 Implementation Costs.

The cost of implementing sensors versus the gain in resolving false alarms and accurate measure of impact loads needs to be weighed. Given the frequency of hard or heavy landings, the addition of sensors has benefit, but it may not outweigh the implementation and maintenance cost of the sensors, data acquisition, and interface with the aircraft central maintenance system.

6.9.2.3.3 Accuracy.

The addition of new sensors and data acquisition system(s) must provide a higher level of accuracy and lower level of false alarms to justify their use and installations. For example, traditional strain gauges and fiber optics strain sensors or pressure sensors' load measurement accuracy needs to be determined by analysis and experimentation prior to trade analysis.

6.9.2.3.4 Multiple Use.

Sensors were considered favorable if they had multiple uses for the following applications: hard landing detection, structural usage of landing gears, tires, wheels, airframe, CG and GW gear life-ing, and weight/CG estimation.

6.9.2.3.5 Dedicated and Hybrid.

The following configurations should be evaluated concerning hard landing:

- Advanced NN-based hard landing algorithm with no sensors
- Advanced structural model with selected sensors (sensor selection is based on cost and effectiveness).
- Synergistic landing gear life-ing, shimmy damper HM, and GW applications

The proposed design is shown in figure 36.

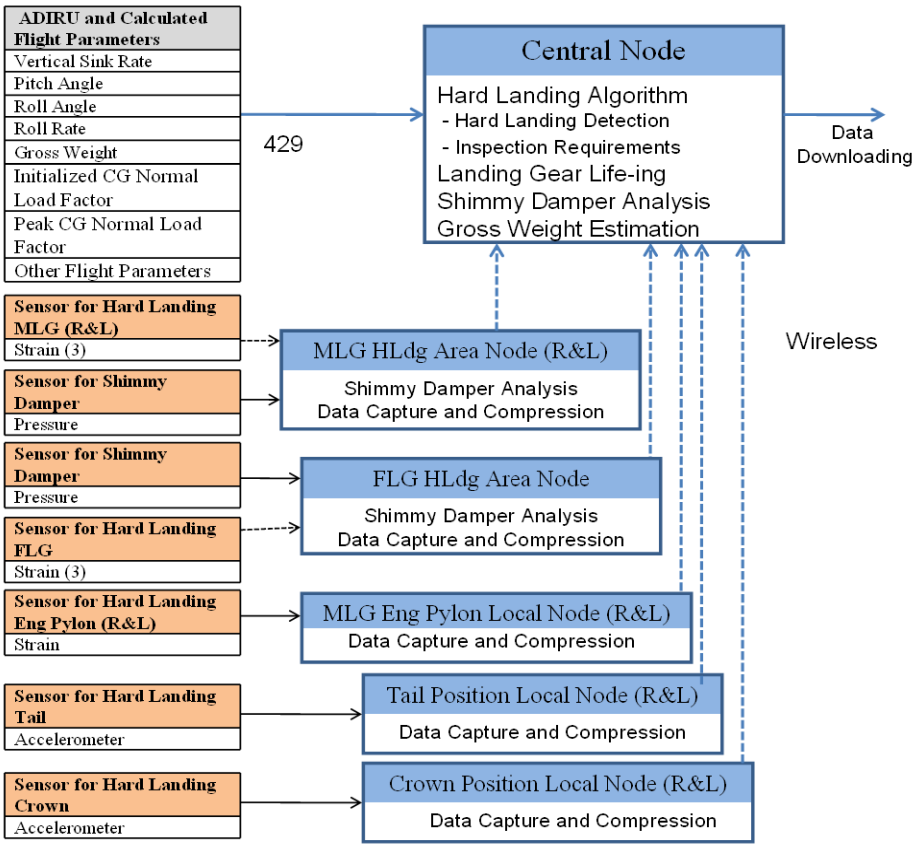

Figure 36. Hard Landing Configurations for Dedicated and Hybrid Platforms

The connectivity between the various nodes and the center node is shown as wired except for wireless connectivity to tail and crown local nodes. The accuracy of the GW calculation would depend on the sensors used for main and front gear hard landing. The default is the strain gauges. The alternative is an optical fiber Bragg gradient. The strain sensors on the fuselage would be powered by energy harvesting (either vibration or with a rechargeable battery) and activated only during landing. The local node supporting these sensors would be capable of data compression, if not reduction, by comparing the current data sample to a standard and sending a reduced set of residual information.

The following functions would be implemented in the area and central nodes:

- MLG Area Node

  - Hard Landing Strain—Filters strain data and resolves strain at various attachment points to determine load (Filters, Physics or Data Driven Models)

  - Shimmy Damper Analysis—Filters accelerometer and pressure data and generate shimmy assessment (Filters, Physics or Data Driven Models)

- Weight Calculation—Estimates weight from strain sensors. (Physics or Data Driven Models)

- Nose Landing Gear (NLG) Area Node

  - Hard Landing Strain—Filters strain and resolves strain at various attachment points to determine load (Filters, Physics or Data Driven Models)

  - Shimmy Damper Analysis—Filters accelerometer and pressure data and generate shimmy assessment (Filters, Physics or Data Driven Models)

  - Weight Calculation—Estimates weight from strain sensors (Physics or Data Driven Models)

- Hard Landing Functions in Central Node

  - Hard Landing Structural Loading (Large Logical Constructs/Reasoner)
  - Inspection Requirements (Physics or Data Driven Models)
  - GW Estimation (Physics or Data Driven Models)
  - Landing Gear Life-ing (Physics or Data Driven Models)

6.9.2.3.6 Shared.

The Shared design will be the same as the Dedicated and Hybrid except for the addition of structural sensors in the wing to implement structural HM.

The Shared architecture would provide additional integration of hard landing, landing gear life-ing, and structural HM. Future visions of system health management may involve strain gauges and other active interrogation methods for composite materials. The inclusion of these more advanced sensors is not included in this document.

The amount of raw downloaded data necessary to support historical analysis and potentially re-life structure would have to be determined. Retaining a historical basis for life-ing structures may outweigh the cost of downloading the data over an extended period of time.

The following are additional functions to be implemented in the area and central nodes:

- Structural Health Wing Area Node

  - Structural Strain—Filters strain data from sensor nodes and fuses it to get strain estimate (Filters, Physics or Data Driven Models)

- Central Node

  - Data Download

6.9.2.4 Application Assessment.

The Dedicated and Hybrid application requires wireless connectivity throughout the aircraft, thus supporting strain sensors would be a challenge for a low-power wireless network. A combination of data compression and data reduction should reduce the bandwidth needed to support these remote nodes.

6.9.3 Hard Landing/Structural Loading Cost-Benefit Analysis.

6.9.3.1 Hard Landing Cost-Benefit Analysis for Dedicated Aircraft.

The CBA produced moderate benefit for the configuration, which only used flight data to determine a hard landing event. The case where sensors are added showed less benefit, due to the weight of the data concentrator and sensor, added to support the application, was more negative than beneficial for additional accuracy. However, the weight of the data concentrator to support the hard landing application also supports other applications, such as tire pressure monitoring. Depending on the specific system configuration, the CBA can vary from significantly less, to equal, or better than the no-sensor configuration.

6.9.3.2 Hard Landing/Structural Loading Cost-Benefit Analysis for Hybrid Aircraft.

While the Hybrid aircraft had a higher cost avoidance, it experienced less than half of the landings compared with the Dedicated aircraft and is a smaller fleet. Even if the sensors were removed, the application would not have positive NPV benefit.

6.9.3.3 Hard Landing/Structural Loading Cost-Benefit Analysis for Shared Aircraft.

The Shared aircraft is similar to the Hybrid aircraft where it shows a slight loss in NPV for the application.

6.9.4 Hard Landing/Structural Loading Certification Considerations and Approach.

This flight-critical application would eliminate inspections of the landing gear and supporting structure.

Application processing could be done on or offboard, but the results would need to be available to a ground base immediately after landing. If application processing is done onboard in the central node, the central node would have to be certified at the same level as the flight-critical application. If the processing was done offboard, then an approach to certification could be taken to ensure the integrity of the data as it was being communicated via methods like CRC, and then process the data in a ground processing system that was certified.

The sensor and local node that was acquiring and running the CRC algorithms would have to be flight-certified at the same criticality level. The strain sensor input could not underreport the stress experienced during the landing. There are a number of ways to ensure a level of integrity for sensor reports, including redundant sensors and voting,

reliable sensor(s), a fault detection capability that guarantees faults in the sensor system would be detected and reported, or a combination of these methods. A diagram of a system using redundant sensors is shown in figure 37.

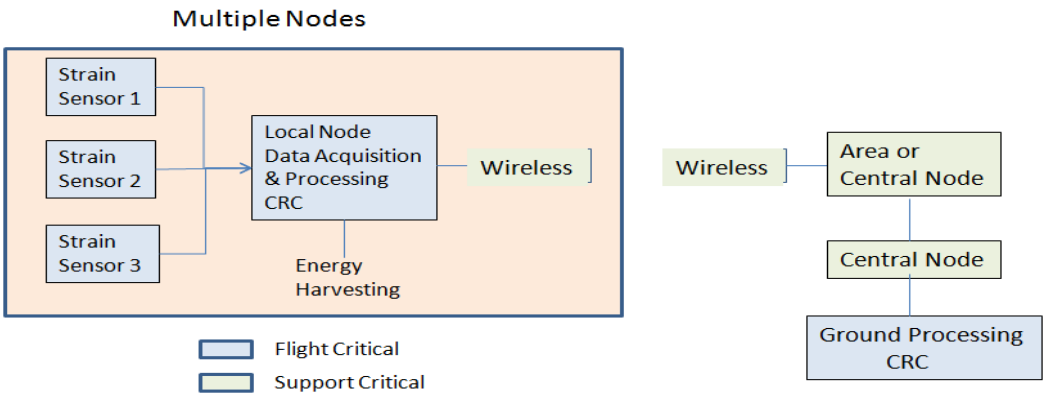

Figure 37. Architecture for Local Nodes in Hard Landing Application

A significant aspect of this problem is if any of the strain sensors malfunctioned, the system could revert to a rough analysis of landing. An extreme condition would be the use of an algorithm designed to compute hard landing conditions with no sensor inputs. The less discerning algorithm would report more false positives (report hard landings that were not hard landings), but that would be cautious.

Another consideration would be the use of wireless connectivity to move flight-critical data, although data might be lost. The mitigating factor would be to revert to an algorithm class where verified data have been received. The application would degrade gracefully as described above.

The airworthiness of the additional sensor, data acquisition and processing hardware, and wiring and wireless equipment would need to be established. There would not be new technologies introduced except for the wireless communication and energy harvesting. All of these sensor types have been approved for use on commercial aircraft.

7. SYSTEM DESIGN AND ARCHITECTURE.

The SPMS design is created for the baseline platforms from the applications described above. A conventional design is generated for each baseline, followed by designs that are less conventional and technologies not typically used on aircraft. The conventional design uses technologies that are developed and accepted. The purpose is to create technologies that may have sufficient impact if developed to the point where they could be used to support the implementation of HM in aircraft.

7.1 DEDICATED PLATFORM.

The dedicated platform top-level (i.e., central, area, and relevant local nodes) conventional system design is shown in figure 38.

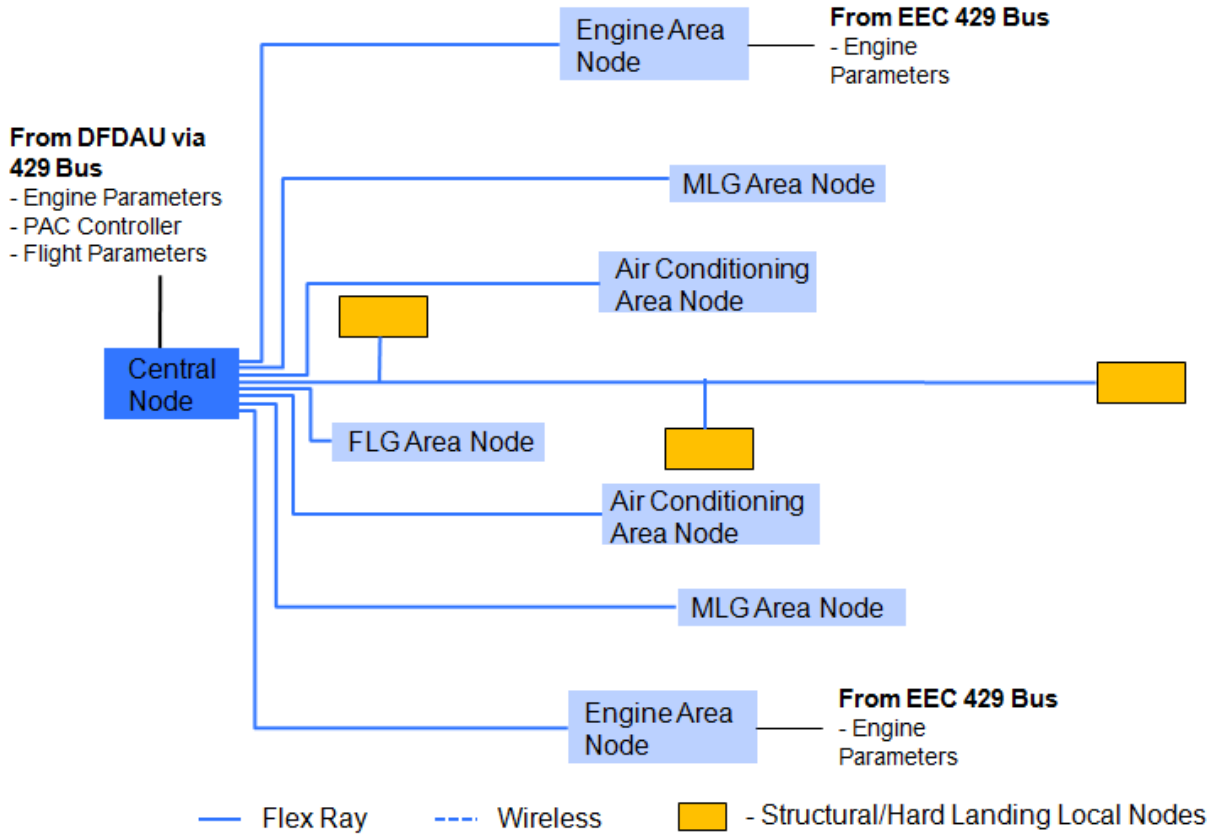

Figure 38. Top-Level Conventional Design for Dedicated Platform

The design implements a number of area nodes using data concentrators connected to the central node by a FlexRay® communications bus. FlexRay is a deterministic Ethernet-type bus that is known in the auto industry, is relatively inexpensive yet reliable, and has the capacity to address HM data transmission requirements.

In this design, the data concentrators for the area and local nodes are powered by running a power line along the same or similar path as the data bus from the power distribution panel. The system accesses 429 data in the engine area from the EEC and in the electronic equipment area from the central node. The 429 data can be accessed using proven methods that isolate the potential impact on the flight-critical bus.

The conventional design for the Engine Area Node and associated sensing is shown in figure 39.

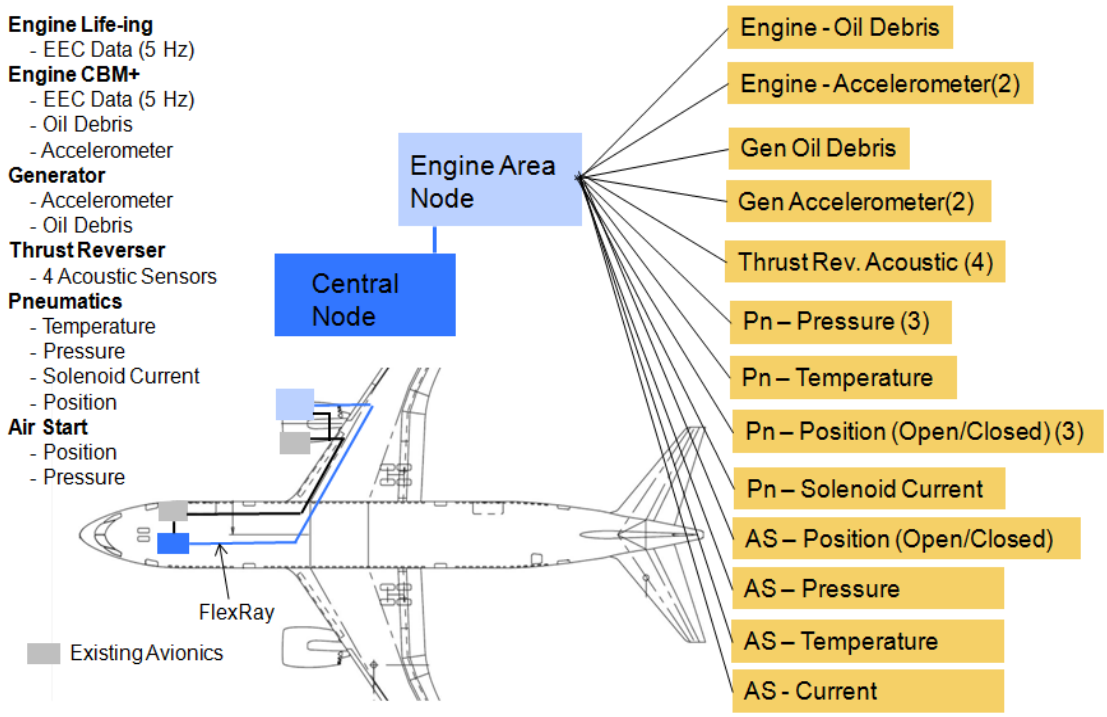

Figure 39. Engine Area Conventional Design for Dedicated System

The connections to the sensors from the Engine Area Node are wired point-to-point and powered from the data concentrator.

The conventional design for the hard landing/structural loading area is shown in figure 40. The connections to the sensors from the MLG and front landing gear (FLG) area nodes are wired point to point except for tire pressure and temperature sensors. Sensors are powered from the area node. The strain sensors used to support hard landing are interfaced directly with the central node using the FlexRay bus.

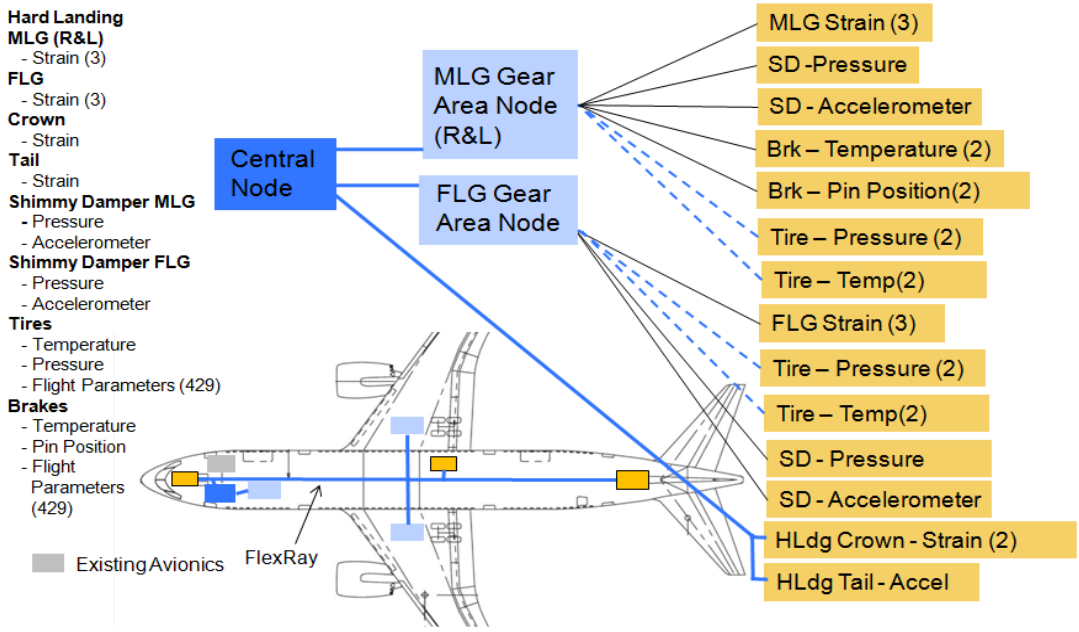

Figure 40. Conventional Design for Hard Landing/Structural Loading

The conventional design for the air conditioning area is not traditional. Given the distribution and number of components, it was shown that the only beneficial approach was to implement a wireless network support local nodes mounted on the components of interest (see figure 41). As described above, the local nodes are powered by thermal energy harvesting and are controlled by the respective area nodes to collect data. The area nodes also manage the use of local nodes to optimize the data acquired (given the power available).

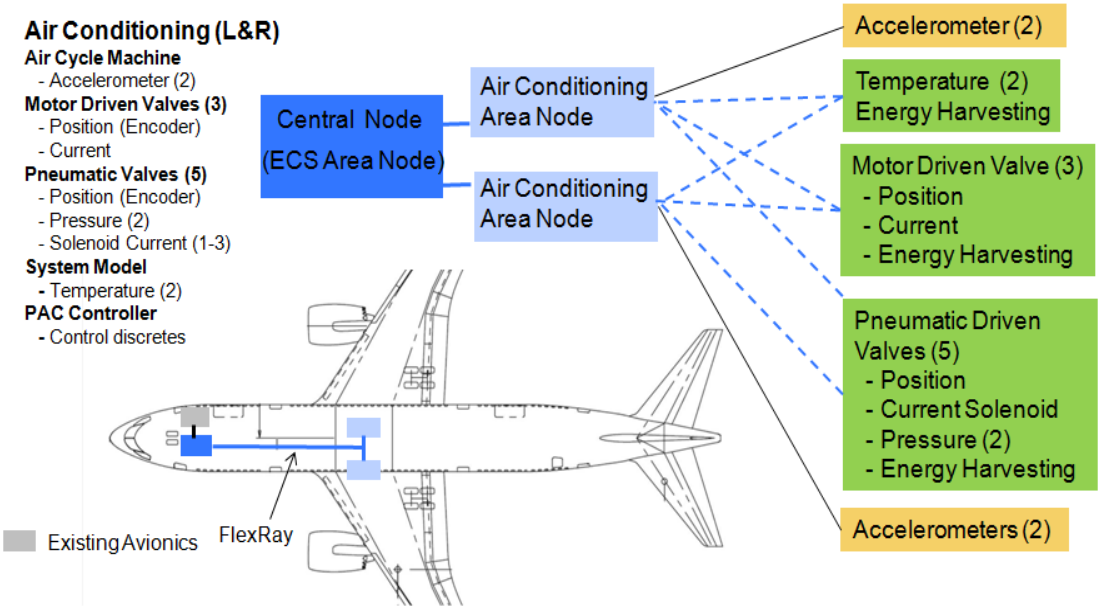

Figure 41. Design for Air Conditioning Area

Data are accessed from a 429 bus to obtain the BIT results and control selections of the crew from the PAC. The ECS area node that would correlate and integrate results from the left and right packs is incorporated into the central node.

Given the above information as the point of departure, what technologies can be applied to reduce the cost or provide more value? A less conventional design use is shown in figure 42. This design reduces the data and power wiring by additional use of wireless communications and energy scavenging in the following areas:

- Wireless Cabin Network: It is assumed that there will be a wireless network for the cabin and this network can be leveraged to communicate HM data from the hard landing sensors in the crown, mid-section, and tail.

- Wireless HM Network: Data from the Engine Area Node are communicated to the Central Node through a wireless link from the Engine Area Node to the MLG Area Node, then to the central node via the FlexRay data bus. Local wireless nodes are used as a gateway to link the landing gear strain sensors and the systems located on the lower landing gear (brake temperature and pad thickness, shimmy damper) to the MLG and FLG area nodes.

- Energy Harvesting: The hard landing sensors in the tail and crown are powered by thermal energy harvesting with battery storage. Thermal and vibration energy harvesting can be an answer to power sensors and local nodes that have low power demands. It is particularly useful if the sensor or node has an intermittent duty cycle.

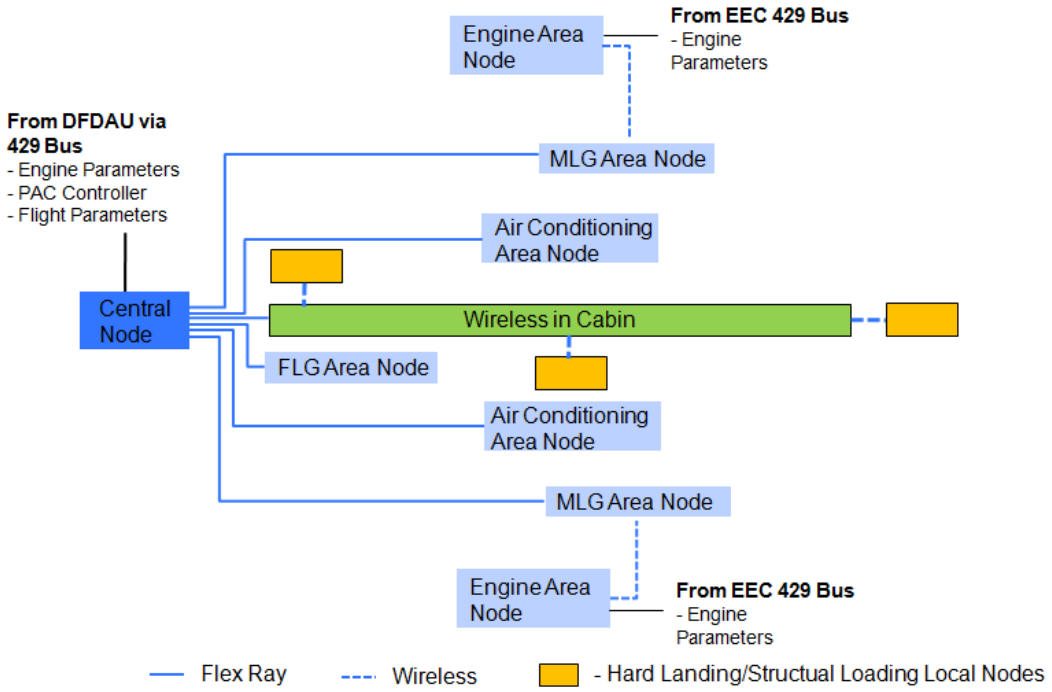

Figure 42. The SPMS Design Exploiting Wireless Communications

Wireless cabin networks are already available and could be leveraged. Airlines currently offer WiFi connectivity to passengers. Generally, the advantages of wireless communications are the following:

- Simplicity of design, manufacturing, and installation
- Reliability based on less wires and connectors
- Weight based on less wires, shielding, brackets, and connectors
- Simplifies design modifications and upgrades
- Operation in a harsh environment—the RFID and surface acoustic wave (SAW) technologies can be used in high-temperature environments since they do not require electronics to be located with the sensing element. The SAW technologies are at a low TRL at this time.

The following are the disadvantages of wireless communications:

- Potential interference with other aircraft or personal equipment
- Lack of standard protocols to satisfy regulations across user environments and to support HM communications
- Limited range/connectivity due to interference or obstacles (this can be addressed by repeaters to hop around obstacles)
- Current protocols beneficial for cabin applications are not as well suited for HM in terms of the protocol packet-size and overall throughput
- Data security

There is a lot of industry interest in developing technology and standards for wireless communication on aircraft driven more by cabin applications than HM. However, the military and industry are pursuing high-temperature sensing and wireless communications because the advantages for areas such as manufacturing and oil- and gas-well monitoring are beneficial.

Because the sensors and electronics can tolerate the environment and repeated high-temperature cycling, wireless communication within the engine nacelle can be accomplished. This capability is approximately 3-5 years away from being realized.

The wireless line from the Engine Area Node to the MLG Area Node was chosen as a likely path. The Dedicated platform has a metal engine nacelle, but the wireless may exploit seals on each of the nacelle doors. Failing this, a repeater could be installed in the

nacelle. It may be possible to communicate directly to areas within the cabin. However, it would be sufficient to communicate via the MLG nodes while the aircraft is taxi-ing.

An alternative to a wireless link is power line communication (PLC). While PLC has bandwidth limitations brought about by noise and the length of the run, the communications do not have to be continuous and would tolerate dropouts if detected. Solid state power controllers offer a ready means to detect the single, but are not standard equipment in legacy power systems.

If the above technologies can be developed, there are a number of affordable approaches for transmitting data from the engine area to the central node. These same technologies may be applied to the other area nodes as well.

A significant challenge with a Dedicated platform is supplying power to the Area and Local Nodes as well as the sensors. If power has to be routed to an Area Node, running the data line is beneficial. Typically the sensor, area, or local node is located remotely where the only power available supports a flight-critical function. Thermal and vibration sensing offers a solution for sensor or Local nodes that have limited power demand and/or intermittent duty cycle. Using sleep-modes to save power is not instantaneous and will result with delay in response.

The data concentrator associated with area nodes, such as the Engine Area Node, will require approximately 15-20 watts of continuous power. This necessitates consideration of methods which scavenge power from existing power sources. Such methods will have to limit the amount and duty cycle of the scavenging and use isolation techniques to address safety concerns.

The cost-benefit analysis will focus on three types or classes of designs: the conventional design, a design that uses wireless and energy harvesting technologies, and a design that uses PLC for communications between the Central, Area, and Local Nodes.

7.2 HYBRID PLATFORM.

The significant differences between the Hybrid and Dedicated platforms is that the Hybrid platform makes greater use of data buses to move data within the avionics systems and provides processing resources for a central node. Unfortunately, at the time the aircraft was designed, there was no overt effort to take advantage of the bus structure for the benefit of HM. While the bus structure has the capability to provide access to a richer data set, this is seldom realized since HM requirements, specifically those relevant to prognostics and life-ing, were not a driver during the platform design. While the bus structure does offer easier access to data and a capacity that can be used in future modifications, the data currently available beyond the Dedicated platform is limited. For the applications described in section 4, significant examples are:

- Data are available on the thrust reverser actuator positions

- Data are available on some pneumatic and motor drive valves in the air conditioning and pneumatic system that could be used to monitor valve closure times

The usefulness of these data for prognostics applications is clouded by internal delays in placing the data on the bus, which can lag its actual generation. The consistency of this delay can be significant in the above applications.

On the other hand, as upgrades are being made to the Hybrid platform, an accurate assessment of the value of the data has not been readily available. HM researchers tend to want the data they know will produce good results to understand the basic fault/degradation characteristics and have not been in a position evaluate what can be done with data that is or could be made available in practice.

Data collected from operating fleets are generally considered sensitive for a number of reasons, from guarding against legal liability to maintaining a competitive position in the support and maintenance business.

7.3 SHARED PLATFORM.

The Shared platform/architecture does not require an additional communication bus or buses, but is capable of sending and receiving great quantities of data to and from the central computer to the various area nodes. Thus, there would be no additional weight added to the aircraft for HM communication. HM functions would be implemented in separate data concentrators or within the same computing chassis or processor. Partitioning software based on various levels of criticality would be accomplished by implementation in separate LRUs (e.g., engine control and engine area node) or through hardware or software partitioning within the same computing chassis (e.g., air conditioning control and area node). Recasting the subject applications into the Shared architecture would produce the schematic shown in figure 43. The central node is located in a common core processing and connected to various nodes by means of high capacity buses.

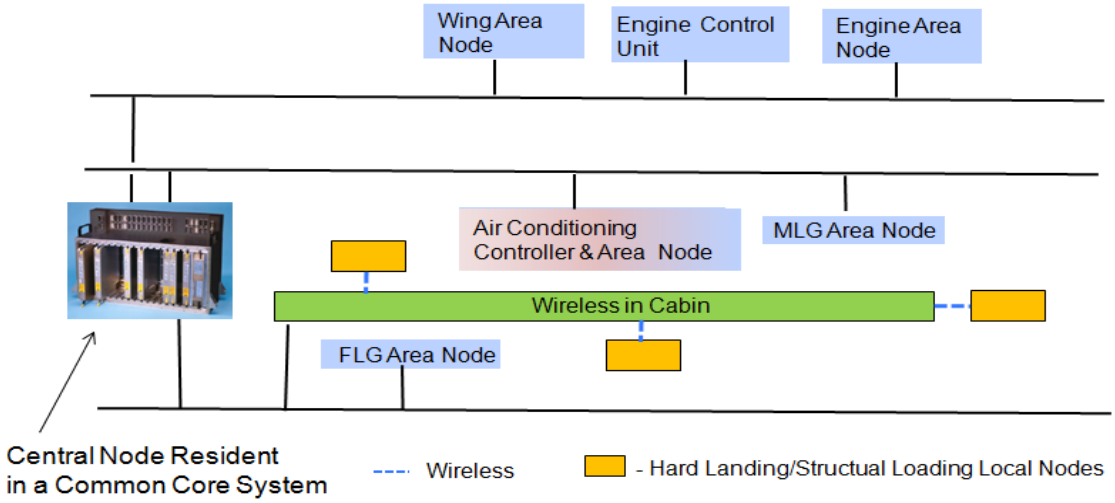

Figure 43. The SPMS Shared Architecture.

The communications and processing barriers in legacy aircraft have been solved. However, the capability of the various LRUs is limited when providing the data necessary to achieve the desired level of HM. As seen in legacy systems, the data used for control of the LRU may not suffice to support trending and prediction of component degradation.

Thus, there is the problem of what HM sensing, corresponding processing, and communication needs to be built into the LRU. This causes consideration as to whether the required HM should be strapped onto the LRU or tightly integrated into the design. It can lead to multiple product versions if customers for the LRU have varying requirements for HM. The OEM has to decide what elements of HM to build in every unit and what elements become a variation to the baseline LRU product.

If the LRU is enabled to accept the HM modification, what are the certification requirements for adding this capability to an aircraft that previously did not implement these features?

With the applications described in section 4, the Shared system is assumed to have access to the data required to support prognostics for these applications and was extended to cover all the synergistic applications related to hard landing/structural loading and include the advanced microwave sensors in the engine application. With data access, this is particularly significant for the engine life-ing and gas path analysis. Representation of the hard landing/structural loading application is shown in figure 44.

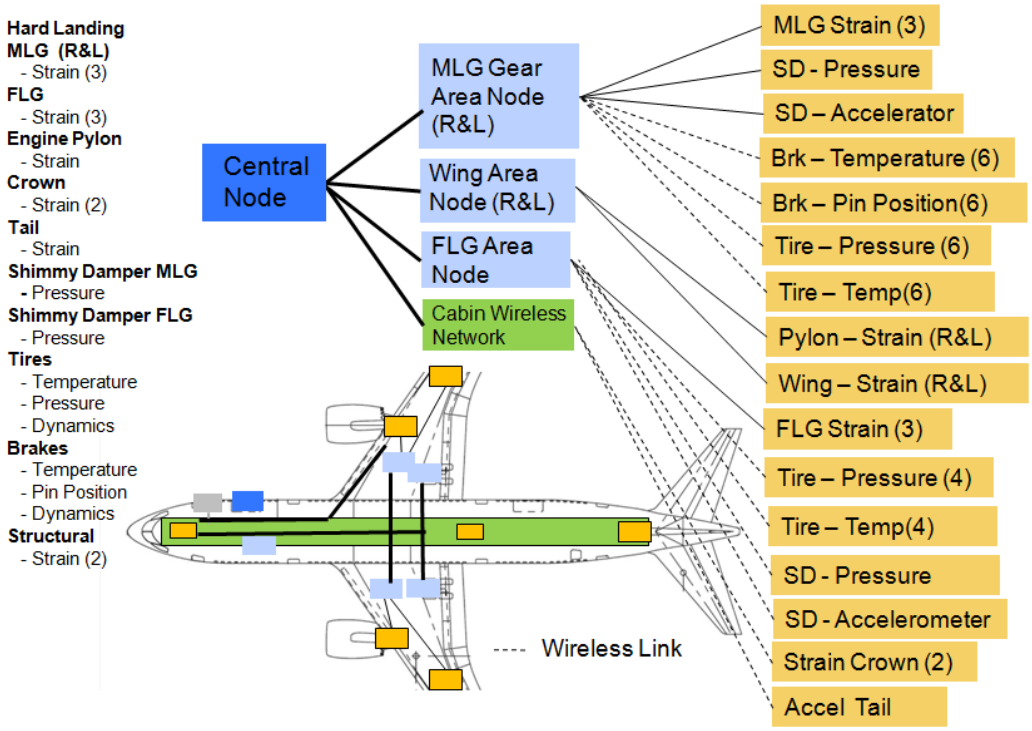

Figure 44. Hard Landing/Structural Loading Application Schematic for the Shared Architecture

8. SYSTEM COST-BENEFIT MODELING AND ANALYSIS.

8.1 FLIGHT OPERATIONS FOR BASELINE AIRCRAFT.

The average use of the platform for each operating day, including the number of cycles or flights each day and their accompanying durations, is shown in table 6.

Table 6. Flight Operations for Baseline Aircraft

Aircraft	Average Flight Time	Number of Flights per Year	Hours of Use in 25 Year Life
737	1.9	1825 flights	86687
777/787+	4.5	803 flights	90337

The Boeing 737NG will average 5 flights per day and the Boeing 777/787+ will average 2.2 flights-per-day. In a 25-year life the average number of flight hours for the Boeing 737 NG would be 87,875 hours and 90,000 hours for the Boeing 777/787+.

The baseline Boeing 737 fleet contains 200 aircraft. This number is selected because it is roughly an average number of aircraft for major airlines using the Boeing 737. A Boeing 777 and 787+ fleet size of 100 is selected for the same reason.

8.2 SUPPORTING DATA AND MODELING AIRCRAFT SUBSYSTEMS AND FAULTS.

When performing a CBA, the areas that are typically the least analytic and subject to the most conjecture are the characteristics of the faults and degradations, the performance of the technology, and its impact in addressing these faults as measured by selected metrics. These areas are very much interrelated, given the level of detail that must be known about faults to be able to predict future health states, life components, or diagnosis of a system.

The approach used in this study is based on analysis of faults by Assigned System Number (ASN) from MyBoeingFleet at the LRU level, where the HM capability is targeted. In the information to follow, the nature of the faults, the HM capability and its maturity, and the predicted impact of the HM capability versus the faults/degradations are described. This section introduces the idea of an ASN and the data available from MyBoeingFleet.

The Air Transport Association of America (ATA) has a common standard for referencing all commercial documentation, which the commercial industry has followed for more than 50 years. However, there are inconsistencies among manufacturers' and operators' categorizations of their aircraft systems into ATAs. For example, a navigation display unit in the cockpit may be classified as ATA 31 (indicating system) or ATA 34 (navigation system).

Approximately 20 years ago, Boeing developed the Component Identification system, which became known as the ASN, to categorize SIs (delays, cancellations, and ATBs). The first four numbers in the ASN are based on Boeing's interpretation of the ATA (an operator may classify it differently). The remainder of the numbers reflect the specific aircraft function (i.e., ASN = 27-61-576-303).

The first four digits represent an aircraft system designated by the ATA (i.e., 2761 = FLIGHT CONTROL SPOILER AND DRAG DEVICES). The next three digits represent the type of part (i.e., 576 = VALVE). The last three numbers uniquely identify the part (i.e., 303 = CONTROL MODULE SHUT OFF VALVE).

The SPMS program applications correspond to or are included in the following ASNs:

- Engine—ASN 72
- Engine Starter—ASN 80
- ECS Pneumatics—ASN 36
- ECS Air Conditioning—ASN 21
- Thrust Reverser—ASN 78
- Tires—ASN 32
- Brakes—ASN 32
- Landing Gear—ASN 32
- Generator—ASN 24

The SPMS applications do not directly map to an ASN in every case. The thrust reverser is contained in ASN 78 Engine Exhaust. The ECS application contains both the pneumatics and air conditioning ASNs. Also, the ASN are successively refined. In the SPMS analysis, the 10-digit ASN was used to determine the effect of HM application functions. Data are pulled from MyBoeingFleet by ASN to determine a system, subsystem or component reliability (mean-time between failure), average maintenance time, and NFF rate.

8.3 THE SI COST.

Prognostics avoid SIs, which are categorized as delays, cancellations, turnbacks, and diversions. Avoidance of these interruptions is the primary benefit of the SPMS.

8.4 MODELING HEALTH MANAGEMENT CAPABILITIES.

For the ASN/ATAs of interest, the impact of the HM capabilities (e.g., prognostic or diagnostic) for a given subsystem is modeled by indicating the coverage or effect of the HM capability on that ASN/ATA at the desired level. This is typically done by subsystems and an HM SME who is familiar with the system/subsystem faults and of the HM solution. From this, a diagnostic capability, such as a percentage of NFFs that will be eliminated, is specified. For prognostics, the coverage or percentage of failures that will be predicted and the prediction horizon is specified. Sections 8.4.1 through 8.4.3 describe the process for the SPMS analysis.

8.4.1 Prognostic Coverage.

The ASN(s) corresponding to the application is broken down to the 10-digit level, where the impact of the functions of the application can be estimated in terms of the ability to prognose unanticipated failures that lead to SIs including gate delays, turn backs, and diversions. For each component in the breakdown, the percentage of the interruptions that the application will address is estimated for the Pneumatics System ASN 36.

A percentage for each application is computed from the individual coverage estimates for the individual elements of the ASN. This percentage is used in the System Health Operation Analysis Model-Probabilistic IVHM Cost-benefit Analysis Model (SHOAM-PICAM) toolset at the two-digit ASN level.

The estimated prognostic coverage for the applicable subsystems is provided in table 7. If a prognostic has 80% coverage for an ASN, it will predict the health of 80% of the components within that ASN.

Table 7. Prognostic Coverage by Application

Application	Prognostic Coverage
Engine CBM—Gas Path and Mechanical	39
Engine Life-ing	N/A
Air Starter	88
ECS—Pneumatics	68
ECS—Air Conditioning	44.5
Thrust Reverser	61
Hard Landing/Structural Loading	N/A
Tires	N/A
Brakes	N/A
Generator	36

Requirements for prognostics provided in SPMS Task 4 documentation included a prediction horizon that was either one, three, or ten days depending on the failure onset characteristics and maintenance requirements.

The prediction horizon impacts this analysis when the maintenance of the component may not be performed within that horizon. This can happen because the aircraft is not in a location where it can be repaired or the downtime from operations combined with available maintenance resources were not sufficient.

8.4.2 Diagnostics.

The impact of the SPMS diagnostics is determined in a similar manner to prognostics. Improved diagnostic capability is aided by the acquisition and processing of additional data.

Improved diagnostics is synergistic with prognostics. The implementation of monitors that support prognostic reasoning provides parametric information that is useful in resolving fault ambiguity because of the increased coverage and is useful for resolving NFF. This is true for faults that intermittently exceed BIT thresholds but cannot be repeated with ground tests. A realistic estimate for the diagnostic effectiveness of the SPMS applications is 98% fault detection and 95% isolation to two LRUs with less than 5% false alarms for all detected faults. However, the percent improvement in fault isolation and reduced troubleshooting time will be evaluated for each application. As with prognostics, these impacts are estimated on a component-by-component basis using the 10-digit ASN breakdown which is, as with prognostics, rolled up to the two-digit level.

The benefits in improved diagnostics also include a reduction in the spares requirement for the fleet as a secondary effect of reducing NFFs and improper replacements of LRUs.

8.4.3 Life-ing.

The impact of usage-based life-ing is estimated by how much more life will be realized by implementing the application. Life-ing is not directly modeled in SHOAM or PICAM, but is included in PICAM as a financial impact. The benefit calculations for engine life-ing, hard landing/structural loading, and tire carcass life are calculated using specific models for each application.

8.5 COST-MODEL GROUND RULES AND ASSUMPTIONS.

The cost of implementing the SPMS applications arise from the additional support costs of the system itself (e.g., maintenance, training), fuel costs due to extra weight, and the recurring and non-recurring implementation costs. The maintenance and training costs are addressed within the SHOAM/PICAM tool set, with the PICAM tool being the primary financial modeling tool.

The reliability of the SPMS for each application is an input to this calculation. Fuel costs are computed based on the weight added to the aircraft. The recurring and non-recurring implementation costs are computed based on parts and labor costs.

The PICAM tool evaluates the business case for implementing the SPMS designs. The model provides a probabilistic estimate of the NPV, return on investment (ROI), and cash flow for a design, plus non-cost metrics such as maintenance man-hours and equivalent fleet size.

The following describes the ground rules and assumptions for estimating the non-recurring and recurring costs of the SPMS system:

- Fiscal year 2011 economics
- An inflation rate has been used to account for the changing economics since the starting time, which was used to compute the NPV
- Business case covers from 1/1/2011 to 12/31/2030 (to cover all applicable subsystems and allow for a full 10-year maturation with everything in place (ROI starts in 2016)
- Development of algorithms, certification, and demonstrations occurring between 2011 and 2014
- Predicting RUL leads to optimized maintenance planning, reduced frequency of unscheduled maintenance (including events for cannibalization) and increased scheduled maintenance to address subsystems before they disrupt operations
- Assume that the SPMS system on aircraft gets replaced twice during the 15-year period and every 5 years for test stations

- Cost of personnel-per-hour is assumed

- Wire weight typical of wire run from sensor to node

- Sensor cost and weight

- The baseline cost for designing and documenting a wiring harness in man hours, while more complex cables are estimated on a case-by-case basis.

- System software design and development costs (in man hours) based on the type of function implemented per the function list provided in the Task 5—Design System Configurations report. This list was augmented to distinguish a filter to smooth a data stream (i.e., notch) from that used to predict health state (i.e., particle). The list of functions and corresponding application efforts were estimated in man hours.

All estimates assume development from a TRL level of 3. The maturity of the applications will vary based on the expertise and experience of the implementer. The intent of the estimate included in this report is to provide a rough baseline, which may be an overestimate of the cost.

- Software certification is considered through the use of a multiplier:

  - 1.0 – Support Critical, Offboard
  - 1.25 – Support Critical, Onboard
  - 1.5 – Flight Critical, Offboard
  - 2.0 – Flight Critical, Onboard

- The cost estimates associated with the integration of the application hardware into a new or legacy design include the cost of the hardware design, drawing changes, and verifying and validating design on initial production aircraft were estimated in man hours for the following:

  - Simple sensor (e.g., temperature, pressure, accelerometer) installation
  - Complex sensor (e.g., oil debris, microwave)
  - Local wireless node
  - Area Node or special signal processor

- Estimated cost for installing components on the aircraft during production is estimated per sensor, wire, local node, or data concentrator.

- Wiring from the hardware object to the next-level node is included in the estimate. Commonality within an application is considered on a case-by-case basis (i.e., the repeated implementation of valve monitoring capability).

9. TECHNOLOGY GAPS, SPMS STANDARDS, AND ROADMAP.

Technology gaps were identified from the capability gaps uncovered in the SPMS design (Task 5) and the SPMS evaluation (Task 6). A capability gap is a deficiency in desired performance (i.e., 10-day prognostic) or a feature (i.e., weight) of the HM system.

From these capability gaps, the technologies that would offer a means to provide this capability were identified, as well as shortcomings in these technologies or technology gaps that must be addressed. Also, standards and guidelines were identified that would aid in reducing the cost and timeline in achieving these goals while maintaining safety.

This report is organized by the natural hierarchy of HM systems—vehicle and area level corresponding to communications and functionality with the central node and data concentrators associated with area nodes, and local-level corresponding to the lower-level data acquisition, processing, and communications. Choices at the vehicle and area level impact the lower-level and vice versa.

9.1 ROADMAP.

A roadmap of the recommended technologies and standards is presented in figure 45 and discussed in subsequent sections. The placement of the items on the roadmap timeline is based on engineering judgment as to when the technology or standard could be created. This is influenced by technology readiness and the need or motivation for the item.

Figure 45. Roadmap of Technologies and Standards

9.2 SYSTEM-LEVEL TECHNOLOGY AND STANDARDS.

The system-level gaps include the following:

- Low footprint communications links
- High-power energy harvesting
- Accessing data from existing controllers
- Modular architecture

9.2.1 Low Footprint Communications Links.

Communications between data concentrators and the central node is a major factor for the Dedicated and Hybrid aircraft. The weight and cost of installing a power and data line between the central node and the engine data concentrator can add as much as 20 lbs. of weight. Communication with the main and front landing gear and with the air conditioning data concentrators require similar wire runs. Going beyond the SPMS applications, there is a need for a general system wide communications infrastructure.

The approach is to facilitate HM communications by creating a network infrastructure using one or more of the following technologies:

- Wireless communications
- Power line communications
- Multiple use technologies associated with wire fault detection

In comparison to running new wiring, these methods avoid the additional wire weight and potential for wiring failures, while simplifying new designs or design modifications and subsequent manufacturing and installation.

A number of these technologies have a secondary benefit, such as power line communications, extending the capacity of existing buses, and power-off communications that can leverage the same electronics to provide wire fault detection.

However, the current aircraft design and certification culture is generally averse to dual- or multiple-use or function hardware as it complicates the safety analysis and certification. However, its use for support-critical SPMS applications helps to understand multi-use technologies.

The technologies described in this report lack credibility. Demonstrations are needed to establish the properties of the technology so that a path to standardization and certification can be defined.

The use of optical fiber is not included in this analysis except in the multi-use technologies. It is a known technology and not specific to HM implementation.

9.2.1.1 Wireless Communications.

Wireless communications have become beneficial as a means to communicate data on aircraft, especially because its use in the main cabin for passenger access to the internet. A major advantage of wireless communication is that it eliminates the need to modify the aircraft design for wiring. The use of wireless communication can be readily extrapolated to a wireless network that is accessible in all parts of the aircraft.

Ideally, to support the SPMS, the wireless protocol and supporting equipment would need to be: (1) efficient in regard to range of HM transmissions from simple event notifications to windows of streaming data, (2) energy efficient in regard to transmit, receive, and sleep modes, (3) nearly deterministic, (4) secure, (5) coherent by supporting time synchronization across a network, (6) capable of penetrating aircraft internal partitions to efficiently achieve coverage, (7) effective in the aircraft EMI environment, and (8) certified for global use on aircraft.

The HM requirements will contribute to, but not drive, wireless requirements on aircraft, what is needed are studies to identify and parameterize the options and sensitivities of current and future technologies to specifically support HM implementation. The HM community should focus efforts on knowing what is needed to implement HM so that it is ready to influence future standards and technology development.

The dominate HM-specific technical gaps in this area are technologies to increase wireless coverage, which includes penetrating aircraft partitions and supporting energy efficiency implementation, specifically remote installations based on energy harvesting. These gaps are related because it is beneficial to achieve coverage with minimal power or dropped messages that require repeated transmissions.

Technologies related to increasing wireless coverage include antenna design, placement, and the potential integration into other aircraft components. Technologies may also be added that enable the use of wireless in specific aircraft EMI environments, such as operation in the engine nacelle. However, such technology is likely to be addressed by the engine controls community.

Experiments should be conducted with promising wireless protocols to further define the above gaps and possible solutions.

The objective would be to influence evolving wireless standards to better address HM needs listed in the eight factors above. The HM-specific standards would follow the technologies to maximize coverage and energy efficiency.

Technology Gaps:

- Methods to efficiently maximize wireless coverage on aircraft
- Methods to achieve energy efficiency

Standards/Guidelines Gaps:

- Standards for wireless communications on aircraft that address the eight features listed above

- Guidelines for wireless devices to improve coverage, including location relative to aircraft seals/partitions, integration into other components, and modification of aircraft structure or components to support wireless communications

9.2.1.2 Power Line Communications.

The PLC technology has been implemented in household applications but not shown to work in aircraft environments with significant noise. Early studies to examine its use on aircraft addressed mission or flight-critical applications. A consideration in the SPMS context is that in support-critical applications, the communications may not be required to be deterministic. In fact, it may be useful with modest message reliability. Multiple attempts at communications, in some cases even over several flights may not be desirable but can be acceptable. The PDS could serve as an infrastructure for this approach. Communication over power lines is also synergistic with the use of solid state electronic circuit breakers for data acquisition on electrical loads, and wire fault detection where electronics for communication could also be used as a two-ended wire fault interrogator.

Technology Gaps:

- The effectiveness of PLC methods needs to be established for various aircraft environments and types of wiring.

- The PLC EMI and impact on electrical loads needs to be established.

Standards/Guidelines Gaps:

- The PLC spectrum and power levels
- Methods of coupling to various types of power wires

9.2.1.3 Multi-Use Technologies.

Technologies such as the ultra wide band technology described above and the Chafing Protection System (CHAPS) are multi-use technologies that provide communications and wire-chafing protection. In the CHAPS technology, optical fibers are embedded in wiring overbraid. The fibers are used to detect chafing and to communicate HM data.

This technology requires an optical fiber interface from the sending and receiving elements/subsystems.

Technology Gaps:

- Fiber and weaving procedures to ensure durability and maintainability of the embedded fiber for the required life span.

Standards/Guidelines Gaps:

- Connectors and optical testers to facilitate testing using support equipment or onboard, automated test implementation.

9.2.2 High-Power Energy Harvesting.

The weight of wiring to power data concentrators in the engine or other locations is a significant weight cost to legacy and, to a lesser extent, new aircraft. Technologies providing a lightweight, continuous power source of 30-50 watts could reduce the total weight of the HM system.

9.2.2.1 Thermo-electric.

Thermo-electric energy harvesting is an established technology, but has not been applied in an aircraft environment. Specific applications, such as the air starter, pneumatics, or air conditioning, may present the opportunity to generate energy based on the thermal gradient associated with bleed and bypass air. The use of this technology will likely require energy storage and a power line to the power system(s). An example of use may be in the engine area where such a device could be located on the precooler to take advantage of the delta temperature between the bleed and bypass air.

Technology Gaps:

- No results were found that examined the effectiveness of this approach in terms of the watts-per-lbs for a given temperature gradient characteristic of aircraft applications.

- Reliability of such technology for aircraft application needs to be established.

- System designs that include energy storage to supply power for start-up periods.

Standards/Guidelines Gaps:

- Installation guidelines for various subsystems.

9.2.3 Accessing Data From Subsystem Controllers.

Legacy aircraft need data that could support an HM application that is internal to a flight-critical controller. (i.e., the EEC and thrust reverser). The thrust reverser position might be digitized at 50 hz and used within the EEC for control, but not externally exposed to the EEC. This is often the case with flight control computers (FCC) where the position and command position of actuators are available within the FCCs, but not accessible externally to the FCCs.

The cost of modifying the flight-critical controllers to export the data is typically prohibitive and may require additional bus capacity.

Any approach to accessing these data seems to incur a greater penalty than modifying the flight-critical software. A technology such as the wideband bus extension described above may be economical for cases where spare card slots are available and could support incorporation into the control computer.

For future systems, it will be possible to implement a configurable interface to the subsystem controller so that the accessibility of parameters and acquisition data rates can be modified within the constraints of the subsystems communications link.

In addition, the modular architecture descriptions are described in section 9.2.4.

Technology Gaps:

- No known approach for dedicated and hybrid systems
- Configurable interface for shared systems

Standards/Guidelines Gaps:

- Common configurable interface specification to modify data access within controllers

9.2.4 Modular Architecture.

The assumption with the SPMS approach is that it is beneficial to implement HM as a modular capability on LRUs. Advantages of this approach include simplifying the installation and support for automated detection of health-ready subsystems. This would allow an operator to easily transition to health-ready subsystems while supporting the use of legacy subsystems without HM.

The HM implemented on the LRU is modular and interfaces to a system HM network. Thus, LRU HM software and hardware interface to the HM network supporting a plug-and-play capability.

9.2.5 Software Architecture.

A standard set of interfaces should support the interface of LRU functions with the overall HM software infrastructure. The OSA-CBM is a Machinery Information Management Open System Alliance and International Organization for Standardization (13374) provides such an infrastructure and set of interfaces.

Technology Gaps:

- OSA-CBM could be efficient in real-time environments.

Standards/Guidelines Gaps:

- N/A

9.2.6 Hardware Interfaces.

The protocol used for the avionics data buses and in the communications technologies described above, would provide the hardware interface to support plug-and-play.

Technology Gaps:

- N/A

Standards/Guidelines Gaps:

- N/A

9.3 SUMMARY OF APPLICATION TECHNOLOGIES, STANDARDS, AND GUIDELINES.

A summary of the application gaps, opportunities, and actions needed is provided in table 8.

Table 8. Summary of Technology Gaps

Application	Gap/Opportunity	Technology, Standards, Guidelines, and Actions
Engine Life-ing	Maintenance credits for engine life	Validated algorithm with known performance for given input parameters and parameter sampling rate and fidelity.
		Materials with more predictable life-ing characteristics
		Process for the transmission of flight-critical data via support-critical systems.
		Guidelines for the validation of usage-based life-ing functions.
Engine CBM	Lower weight processing for blade tip timing and clearance	Reduce weight of special processor by integrating processing with other engine controls.
	Maintenance credits for engine CBM	Maturation of CBM for use in flight critical processes including ETOPS and eventual condition-based removal of the engine vs. usage-based life-ing
		Guidelines for certification of flight-critical HM prognostic functions.
Engine Starter	High-temperature monitoring	Easy install, high-temperature pressure and position sensing
		Designed in local HM node
	3-day or greater prediction horizon	Validated algorithm to predict pneumatic valve degradation
The ECS Pneumatics	High-temperature monitoring	Easy install pressure, current, and position sensing
	3-day or greater prediction horizon	Validated pneumatic driven valve prognostic methods
		Validated algorithm to predict motor-driven valve degradation
The ECS Air Conditioning	Reliable and maintainable sensors and/or local node installations	Easy install pressure, current, and position sensing
		Easy install local node including energy harvesting
	3-day or greater prediction horizon	Validated algorithm to predict pneumatic valve degradation

Table 8. Summary of Technology Gaps (continued)

Application	Gap/Opportunity	Technology, Standards, Guidelines, and Actions
		Validated algorithm to predict motor-driven valve degradation
	Reduce wiring by using wireless nodes	Integration of HM and Energy Resource Management to maximize quality diagnostic and prognostic outputs
Thrust Reverser	3-day or greater prediction horizon	Validated algorithm to predict slide-track degradation based on position data
		Validated algorithm to predict slide-track degradation based on acoustic sensing
		Validated algorithm to predict air blocker degradation
		Standards for SAW implementation on aircraft
Tires and Brakes	Increased number of retreads per tire carcass	Lightweight, self-powered tire pressure sensing
		Lightweight, self-powered tire temperature sensing
		Validated algorithm to realize retread savings
Hard Landing/Structural Integrity	Effectiveness of hard landing methods with and without sensors	Determine the value and placement of strain sensors
		Inspection requirements based on application outputs
	Exploit landing gear load sensing.	Methods to exploit landing gear loading to determine aircraft weight and CG to drive additional HM and performance applications
Generator	3-day or greater prediction horizon for mechanical failures	Determine required sensing and prognostic effectiveness for mechanical failures

9.3.1 Engine Life-ing.

The key technical need is for a validated usage-based life-ing algorithm with known performance for given input parameters and parameter sampling rate and fidelity. The difficulty with handling this application seems to be the cost of certification and lack of interest by operators to implement.

The process of collecting and transmitting data that would be used in a flight-critical process via support-critical systems would benefit from standardization.

Longer term, this application might be enhanced by manufacturing life-limited components with more predictable fatigue characteristics.

Technology Gaps:

- Validated algorithm with known performance for given input parameters and parameter sampling rate and fidelity.

- Techniques to manufacturing components with more predictable fatigue characteristics.

Standards/Guidelines Gaps:

- Guidelines for the transmission of flight-critical data via support-critical systems.
- Guidelines for the validation of usage-based life-ing functions.

9.3.2 Engine CBM.

The immediate technical obstacles are the reduction in the weight of blade tip clearance and timing.

The plan for engine CBM is for it to eventually replace engine life-ing. Engines would be replaced on condition rather than based on usage, even model-based usage. This capability could evolve from initial use to relax Extended Operations (ETOPS) constraints based on engine health indicators.

Technology Gaps:

- Reduce weight of the CBM implementation

- Maturation of CBM for use in-flight-critical processes, including ETOPS and eventual condition-based removal of the engine versus usage-based life-ing.

Standards/Guidelines Gaps:

- Guidelines for certification of flight-critical HM prognostic functions.

9.3.3 Engine Starter.

The two major technical gaps for this application are a validated means of predicting starter valve failure and the availability of high-temperature, lightweight MEMS pressure and position sensing, given that sluggish valve response is a precursor to predicting pneumatic-driven valve failure.

Monitoring the pneumatic system within the engine nacelle is challenging because of the temperature of the bleed air, which can be over 800°F, coming from the engine. Sensing

could be done remotely, but this typically adds complexity and degrades the value of the data acquired. Pressure, temperature, and air flow sensors are currently being developed to operate in environments that exceed 1000°C. Additional details on high temperature sensing can be obtained from suppliers such as Sporian Microsystems, Inc [1].

Technology Gaps:

- Easy install, high-temperature pressure and position sensing
- Validated algorithm to predict pneumatic valve degradation

Standards/Guidelines Gaps:

- N/A

9.3.4 Pneumatics.

Similar to the engine starter application, the major technical gaps for this application are a validated means of predicting pneumatic valve failures, including the associated regulators, and the availability of high-temperature, light-weight MEMS pressure and position sensing (sluggish valve response is a precursor to predicting pneumatic-driven valve failure). More advanced SPMS applications might use wireless communications in the implementation to reduce weight similar to the air conditioning application below.

Technology Gaps:

- Easy install, high-temperature pressure, and position sensing
- Validated pneumatic and motor drive valve prognostic methods

Standards/Guidelines Gaps:

- N/A

9.3.5 Air Conditioning.

The air conditioning application is ideal for the implementation of wireless MEMS sensing. The system has many components distributed throughout the aircraft. Wireless sensing and energy harvesting would save wire weight. The difficulties for this application are a validated means of predicting pneumatic- or motor-driven valve failure, technology to get the best performance from a distributed system where many of the SPMS components rely on energy harvesting, and the SPMS node hardware can be implemented on the various components in an easy install fashion that is reliable, maintainable, and lightweight.

The air conditioning system would be an excellent system to use as a technical challenge for the above technologies.

Technology Gaps:

- Easy install pressure, current, and position sensing
- Validated algorithm to predict pneumatic- and motor-driven degradation
- Energy resource management (see section 4.2)

Standards/Guidelines Gaps:

- N/A

9.3.6 Thrust Reverser.

For Dedicated aircraft, the application lacks a validated approach to predict slide-track wear and air blocker failure.

The technological need is to predict slide-track degradation using position sensing for Shared and Hybrid aircraft. Acoustic sensing was proposed to predict slide-track degradation for Dedicated aircraft where position data is not available.

No validated method of predicting air blocker was discovered. Longer term it may be possible to monitor strain and/or crack formation with SAW technology.

Technology Gaps:

- Validated algorithm to predict slide-track degradation based on position data
- Validated algorithm to predict slide-track degradation based on acoustic sensing
- Validated algorithm to predict air blocker degradation

Standards/Guidelines Gaps:

- Standards for SAW implementation on aircraft

9.3.7 Tires and Brakes.

The value in this application involves increasing the number of retreads for a given tire carcass by maintaining the proper tire pressure and using both the tire temperature and pressure history as predictors for reusing the carcass each time. This approach has not been validated.

Lightweight, MEMS tire pressure, and temperature sensing would reduce the weight penalty for this application.

Technology Gaps:

- Lightweight, self-powered tire pressure sensing
- Lightweight, self-powered tire temperature sensing
- Validated tire carcass usage

Standards/Guidelines Gaps:

- Guidelines for tire carcass reuse bases on usage metric

9.3.8 Hard Landing/Structural Integrity.

Based on the SPMS analysis, there are no significant technical challenges to achieving benefit from this application for shorter haul aircraft. A technology gap exists in determining the value and placement of strain sensors to better resolve hard landings. There is a strong potential to use such sensors to determine aircraft weight and CG that could be used to save fuel.

Technology Gaps:

- Determine the value and placement of strain sensors
- Methods to accurately determine and exploit aircraft weight and CG

Standards/Guidelines Gaps:

- Inspection requirements based on application outputs.

9.3.9 Generator.

There are a number of ongoing military-sponsored programs on generator SPMS applications. However, this is not known—sometimes even by participants in such programs—because of the lack of data on generator degradations, whether or not mechanical failures of the main bearings or constant speed drive can be predicted using only electrical signals.

Technology Gaps:

- Determine required sensing and prognostic effectiveness for mechanical failures

- Easy install, reliable oil debris, and accelerometers

Standards/Guidelines Gaps:

- N/A

10. SYSTEM DEMONSTRATIONS.

The objective of SPMS Task 8—Technology Demonstrations, was to investigate selected technologies through their application in the laboratory. Two areas were pursued: (1) a wireless strain sensor capability for monitoring landing gear health and life, and (2) ZigBee® wireless motes to serve as a communication infrastructure for HM.

10.1 WIRELESS LANDING GEAR STRAIN MONITORING DEMONSTRATION.

The demonstration consisted of the use of a wireless sensing system to monitor landing gear loads. The representative landing gear configuration used in the technology demonstration is shown in figure 47.

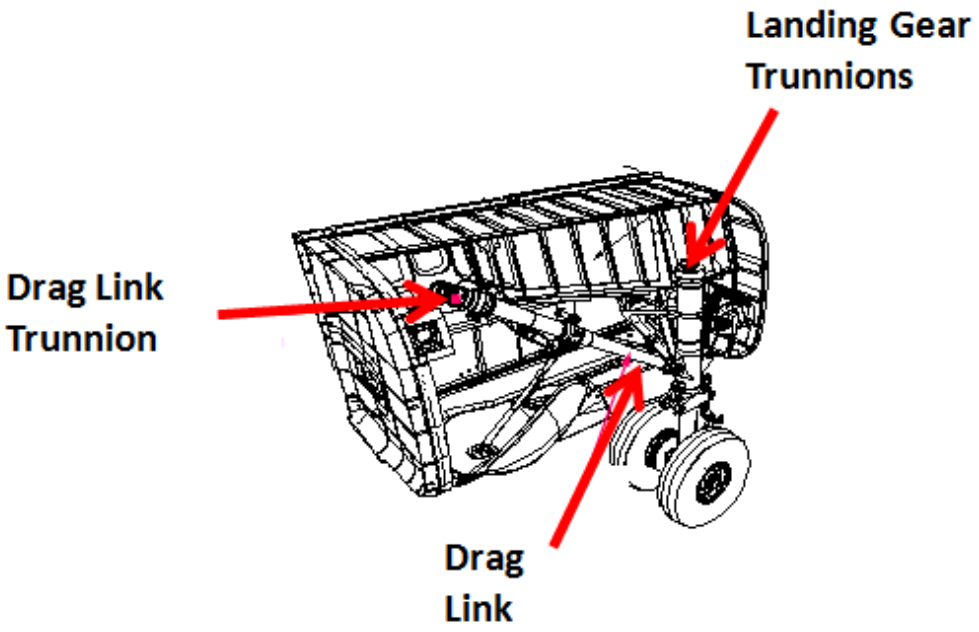

Figure 47. Representative Landing Gear Configuration

A laboratory fixture was created based on this landing gear configuration. The vertical landing gear trunnions, left and right, were monitored by means of a wireless strain gauge sensing. Loads were applied to the base (wheel) in various directions to simulate landing scenarios. The drag link trunnion was not monitored.

Static and dynamic loads generated by the fixture simulated a range of load conditions. Static calibration was performed for a range of loads and angles. These data were used to populate look-up tables for increased accuracy and compensation for crosstalks. Tests were done to establish repeatability and system hysteresis. Significant crosstalk was observed between the drag and vertical outputs. This crosstalk was filtered out by accounting for load path geometry.

The demonstration showed accurate, consistent results for the test fixture for various load geometries, which should scale to the larger landing gear structure loads and enable accurate estimates of GW and CG calculations.

10.2 WIRELESS CONNECTIVITY.

As part of the SPMS, Boeing Research and Technology investigated wireless connectivity on the FAA William J. Hughes Technical Center's Boeing 737-200 aircraft on November 8-9, 2011. A number of tests were performed by placing battery powered, ZigBee motes in various aircraft compartments and checking the connectivity to a PC-enabled transmitter and receiver. All of the tests, with the exception of those associated with the APU, were performed with the aircraft powered with a ground cart, but no other systems (i.e., engine) were running. In the case of the APU, it was running during the test.

10.2.1 Test Setup.

The FAA William J. Hughes Technical Center has a Boeing 737-200 airplane that is used for conducting tests of various technologies. The plane does not fly and can only be used for ground tests, with most systems functional. The airplane compartments considered in this test are shown in figure 48.

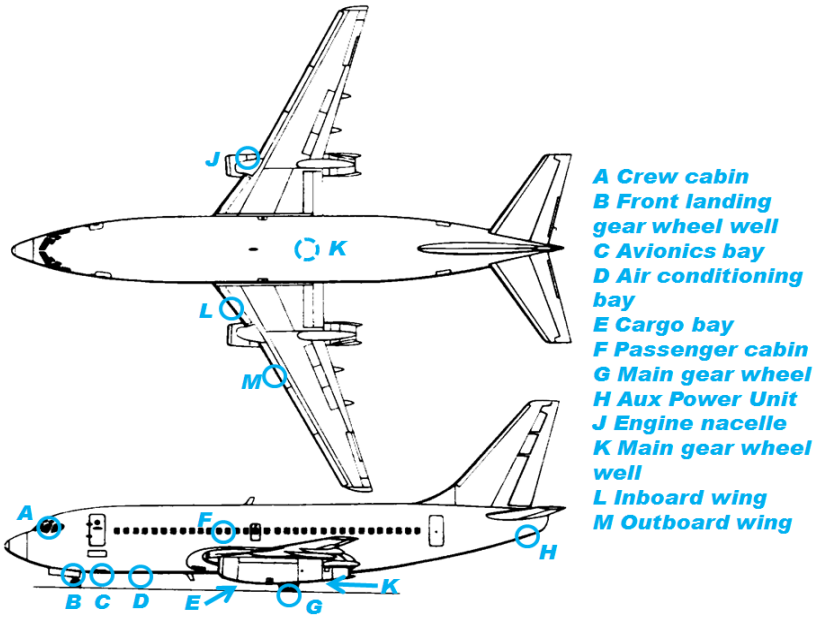

Figure 48. Boeing 737-200 Airplane and Compartments

During the tests, the subject motes were temporarily placed on a structure (i.e., ledge) or fastened with Velcro® sticky tape or duct tape into position and removed after the test. The aircraft was powered by a ground cart while the tests were being performed. The APU was powered during the tests involving that unit.

The connectivity tests included the following:

- MLG wheel well to FLG
- MLG wheel well to cabin
- Cabin to FLG wheel well
- Air conditioning bay to MLG wheel well
- Engine compartment to MLG wheel well
- Ground to avionics bay and cargo compartment
- Ground to APU

10.2.2 Test Results.

It was found that the ZigBee motes were effective in communicating between the various locations listed above. Wireless communications is a possible solution to move HM data onto commercial aircraft.

11. REFERENCES.

1. RTCA, Inc., "Software Considerations in Airborne Systems and Equipment Certification," 1992.

2. RTCA, Inc., "Guidelines for Communication, Navigation, Surveillance, and Air Traffic Management (CNS/ATM) System Software Integrity Assurance," 2002.

3. Daigle, M., and Goebel, K., "Physics-based Modeling for Prognostics: Application to Solenoid Valves," NASA Prognostics Center of Excellence.

4. Daigle, M., Goebel, K., NASA, http://ti.arc.nasa.gov/m/events/industry-day/IDay_Valves_poster.pdf

5. NASA, "Valve Prognostics – System Modeling," http://ti.arc.nasa.gov/tech/dash/pcoe/valve-prognostics/system-modeling/

6. Daigle, M., and Goebel, K., "A Model-Based Prognostics Approach Applied to Pneumatic Valves," *International Journal of Prognostics and Health Management*, August 2011.

7. Abdelwahed, S., Karsai, G., and Biswas, G., "System Diagnosis using Hybrid Failure Propagation Graphs," The 15th International Workshop on Principles of Diagnosis (DX'04), Carcassonne, France, June 2004.

8. Mosterman, P. J. and Biswas, G., "Diagnosis of Continuous Valued Systems in Transient Operating Regions," in IEEE Transactions on Systems, Man and Cybernetics, Part A, Vol. 29, No. 6, 1999, pp. 554-565.

9. Sporian Microsystems, Inc., http://www.sporian.com

APPENDIX A—DESCRIPTIONS OF PRE-DOWN-SELECTED SYSTEM APPLICATIONS (TASK 3 RESULTS)

A.1 ENGINE APPLICATIONS.

Engine subsystems/components, faults/degraded modes, drivers and rationale for selections, and evaluation metrics are described in table A-1. A description of potential Sensory Prognostics and Management Systems (SPMS) applications, a recommended approach, and its desired performance are also provided.

Table A-1. Engine Components: Failure Modes, Rationale, and Metrics

Application Name	Subsystem/ Component Description	Fault/Degraded Mode	Drivers/Rationale	Metric
Engine Life Extension	Life-limited parts (disks, spool, shafts, and seals)	Avoid disk crack formation and risk of catastrophic failure. Current life-ing models are conservative.	Engine overhaul costs are the major maintenance driver, scheduled maintenance, extended engine life on wing reduces these costs	Engine overhaul costs reduced by extending life on wing
Condition-Based Maintenance and Control	Dynamic components: bearings, blades, and engine control	Bearing failure, blade cracking/ rub/damage FOD Ingestion Combustor damage. Support efficient control by monitoring blade tip clearance	Detection of damage to blades and support for decisions on if and when to do maintenance. Detection of blade cracking to reduce/eliminate inspections and support opportunistic maintenance. Control blade tip clearance, thus engine efficiency.	Schedule interruption (SI), Maintenance cost, and crew decision aiding engine efficiency throughout its life cycle.
Gas Path	Gas Path Flow	Inefficiency or imbalance in temperature, pressure and speeds due to malfunctioning controls, contaminated fuel, etc.	Frequent general symptom of fault condition within engine	Availability, troubleshooting time, efficiency of operation/green operation
Thrust Reversers	Thrust Reverser	Indication issues (in-transit or TR lights illuminated in error), sticky track, slow deployment, broken arm, or guides	In top 5 subsystem SI drivers (single aisle)	SI, unscheduled maintenance
Consumables	Consumables	Filters, fluids	Expert knowledge, reduce environmental impact	Availability, reduce SI, environmental impact
Engine Start	Engine Start (also see starter-generator)	Pneumatic air starter control valves fails closed (no motive force for engine start), starter motor, drive shaft shearing or turbine seizing, starter-generators (some platforms) Exciter Igniter Plug	In top 5 subsystem SI drivers (single aisle), valves and motors main causes of starter-related SIs.	Reduce SIs

A.1.1 ENGINE LIFE EXTENSION FROM USAGE-BASED LIFE-ING.

Currently, turbine engines are removed and overhauled based on the number of cycles (takeoffs and landings) the engine has experienced. The overhaul checks the integrity of the turbine disks to ensure that no uncontained failure of the engine occurs. It has been shown that cycle counting- based life-ing is conservative for some aircraft. Usage-based remaining life estimates are determined by the stress the engine has experienced throughout its operating life.

Usage-based methods require access to continuous streaming data of engine temperatures, pressures, and speeds, which are input into high fidelity models of engine stress. The acquisition, handling, and archiving of these large sets of streaming data are required, as is consistent data collection. Some platforms collect small amounts of the required parameters, but do not do so continuously. Alternatively, life-ing models might be implemented onboard, this would require significant onboard processing power and would complicate the calibration or recalibration of the life-ing methods since the source data would not be available for off-board analysis.

A.1.1.1 Condition-Based Maintenance and Control.

Engine life can be extended by removal of the engine based on the condition of components rather than estimation of life based on stress models. This requires high fidelity sensors that can detect crack formation and growth within engine disks. Methods such as tip timing use eddy current or microwave sensors, and require high-performance onboard data acquisition and processing. The use of such a sensor in the compressor stage could provide data on engine vibration, disk eccentricity, blade tip clearance, and disk health. Blade tip sensing information can drive control of the blade tip clearance and improve engine efficiency and provide an accurate indication of when to remove the engine based on efficiency. Oil debris monitoring (particle and chemical) should be included to support monitoring of bearings and bearing wear.

A.1.1.2 Gas Path Analysis.

Proper engine and fuel control are needed to maintain efficient operation. The challenge is properly diagnosing the root cause of the control disturbance or imbalance. The solution is replacement of existing sensors with higher sampling rate temperature and pressure sensors, especially in the combustion section, and improved models to diagnose the overall system. It may be beneficial to add sensors in some legacy applications. Though adding or replacing sensors comes with the reliability concerns that may offset the gain provided by the additional sensing. Closed-loop feedback to controls could be implemented to counteract degraded conditions by achieving a more efficient operation.

A.1.1.3 Thrust Reversers.

Many thrust reverser write-ups are for indication issues—“In Transit” or “TR” lights being illuminated in error. Corrective action is often to adjust (rig) the thrust reversers. Some type of out-of-adjustment monitoring could eliminate SIs until the rigging can be performed at a convenient time. Stress on thrust reversers causes the deployment mechanisms to fatigue, resulting in failure to deploy and, in some cases, damage to engine components. A simple

approach to addressing thrust reverser faults is to monitor deployment time. This method may provide an indication that the reverser is degrading, but is not comprehensive in detecting faults/degradations or providing a longer term prediction of health. More sophisticated methods to monitor stress and vibration on reverser components may enable estimation of remaining life. Thrust reverser malfunctions can trigger safety events, making changes a significant certification challenge.

A.1.1.4 Consumables.

Knowledge and trending of the status of consumables can avoid schedule delays. This knowledge may also be used as contributing evidence of faults or degradations, such as a seal failure. Monitoring filter delta pressure can be used to predict/alert maintenance of the need to change filters and of the failure of a component whose debris is clogging the filter. Important consumables include engine oil and, to a lesser extent, oil in gear boxes that drive subsystems such as generators, fuel, or hydraulic pumps. This application can be extended to include hydraulic oil.

A.1.1.5 Engine Start.

Prevalent failure modes for the starting system are associated with the SCV and the Starter itself. For commercial aircraft, most engines are started by a pneumatic air turbine starter motor. The motor is controlled by a pneumatic SCV. This system uses high temperature, low pressure bleed air to function. These components exist in a very dry, high temperature environment and failures are prevalent. The valve is the first SI cause and the starter motor is the second SI cause. The valve usually fails closed—it will not allow air to the starter motor, so there is no motive force to turn the engine to start. If the valve fails open, it can result in a starter motor over speed—which can cause the starter to fail catastrophically. Valve inoperative (failed closed) is the dominant failure mode. The minimum equipment list usually provides a means by which maintenance can manually open and close the valve to permit dispatch—but the first occurrence will almost always result in a delay. The SCV is not motor-driven, but is actuated by air pressure. Failure modes are typically triggered by corrosion due to condensation. Prediction of its health will require additional sensing to provide indicators like slew rate—not just open and closed, as is typically reported now.

The starter usually fails due to a sheared drive shaft or turbine seizing—both manifest themselves as no-engine rotation when air is ported to the starter.

Some new commercial platforms make use of electrical systems for starting through use of a dual starter-generator. Starter-generators function as starter-motors during the start sequence and then begin to function as generators once the engine has reached a self-sustaining speed of rotation. These components would see failures due to high temperatures, worn/overheated brushes, and sheared shafts as their failure.

The dominant factors for SIs of the ignition components are the exciter and the igniter plug. The apparent failure modes for these components involve being inoperative. The plugs are consumable and are thrown out. The exciter boxes are not consumable and are repaired. On twin-engine aircraft, each engine has two separate ignition systems. Only one is needed to start

an engine. Most operators alternate between the first and second system in order to keep failures that develop over time evident to the flight crew so that maintenance can take appropriate corrective action. The extended operations (ETOPS) (twin engine over-water operation) has more dispatch constraints. For ETOPS operations all ignition systems must be operational—that is why they drive SIs—many of these occur at the start of an ETOPS flight. Because in these situations, with people on board for departure, many operators will "shotgun" parts and replace the exciter, igniter, and sometimes the lead as well—to be certain they fixed it initially. This will raise removal rates for the non-failed components and their association with SI events regardless if they were the root cause of the event.

A.1.1.6 Landing Gear—Tires, Wheels, and Brakes.

Landing gear subsystems/components, faults/degraded modes, drivers and rationale for selections and evaluation metrics are described in table A-2. A description of potential SPMS applications, a recommended approach, and its desired performance are also provided.

Table A-2. Tires and Landing Gear: Failure Modes, Rationale, and Metrics

Application Name	Subsystem/ Component Description	Fault/Degraded Mode	Drivers/Rationale	Metric
Tires	Tires	Wear Damage Overload Over-temperature Over-speed Over-under Pressure	Component removals and unscheduled maintenance Scheduled maintenance driver (24-48 hour inspections)	Availability Reduce/eliminate required inspections MTBUMA MTBUR
Wheels	Wheels	Wear Cracks Broken tie bolts Corrosion	Scheduled maintenance/inspections driver	Availability Reduce/eliminate required inspections MTBUR MTBUMA
Brakes	Brakes	Hydraulic leaks Brake wear Over-temperature	Maintenance/inspections cost driver Component removals/unscheduled maintenance	Availability Reduce/eliminate required inspections MTBUR MTBUMA SIs
Anti-skid system	Anti-skid system	Electronic failures, including bad transducers. May also involve crew interpretation of failure mode.	Unjustified removals, high troubleshooting costs	No faults found (NFF), SIs MMH/FH

MTBUMA—Mean Time Between Unscheduled Maintenance Action

A.1.1.7 Tires.

The goals of an SPMS application for tires include reducing maintenance man-hours associated with inspections, reducing SIs associated with tire replacements, decreasing the cost of tires by extending the retread life of the carcass, and eliminating the possibility of catastrophic tire failure during takeoff or landing operations.

Tire carcass life can be extended by monitoring, tracking, and trending retread history and usage conditions (e.g., hot, heavy takeoffs, hard landings, asymmetric pressures, and rubber temperature). This requires data in the form of takeoff/landing/taxi-flight parametric data (e.g., speed, sink rate, ambient temperature, etc.), tire pressure/temperature monitoring, and configuration tracking information that remains with the tire carcass. Sensors used in this application must operate under high temperature/shock conditions.

A major cost factor is incurred with the daily tire inspection requirements—both at hubs, where there are many maintenance technicians, and at remote destinations where the operator may not have access to qualified personnel. Thus, it is beneficial to have an SPMS application to increase the inspection interval or, as a future goal, to eliminate tire inspections entirely.

Another cost driver is centered on tire removal/replacement, which can cause SIs. An SPMS application to monitor factors that are related to tire replacement, such as normal tire wear, tire damage, or over-stress conditions, can be used to optimize this process.

A.1.1.8 Wheels.

Wheels and landing gear structure are periodically inspected for damage and corrosion. Landing gear structure is covered under the SPMS structure section, but is related and shares information with the wheels application.

The structural health of wheels may be derived from hard landing diagnostic algorithms that compute stress on landing gear structural elements. These algorithms can determine if the wheels may have been damaged and can reduce maintenance time by indicating which wheels/structural elements should be inspected. These algorithms could possibly be enhanced with strain gage inputs, which may be able to eliminate manual inspections entirely. Generally, the tire is the weak link in a hard landing, and the wheel will be removed if the tire is removed.

Methods to accumulate stress damage on structural members can estimate the Remaining Useful Life (RUL) of the landing gear and wheels. Methods to monitor for cracks or missing hardware could be implemented to eliminate visual inspections.

Condition-based methods to detect the onset of failure may also be possible, but are likely to be cost-prohibitive. Corrosion may lead to improper operation and weaken structure. There are both ‘canary’ and direct sensing methods to detect corrosion.

A.1.1.9 Brakes.

Brake wear and temperature data can support algorithms that detect incidents of excessive wear or excessive heat exposure that trigger inspections. The majority of SIs is from wear and from poor maintenance execution. If brakes are not changed at the wear limit, they will be discovered by flight crews during inspections, thus leading to SIs. Generating an estimate for RUL would support opportunistic maintenance and prevent these interruptions.

A.1.1.10 Anti-Skid.

The anti-skid system produces a high percentage of NFF due to failures in electronics and transducers. These failures are typically detected by a built-in test in the controller and any failures conveyed to the crew. The anti-skid system accounts for a small percentage of SIs, and there would be more return from efforts focused on wheel, tire, and brake issues for Air Transport Association (ATA)-32.

A.1.1.11 Environmental Control System.

The Environmental Control System (ECS), its subsystems/components, faults/degraded modes, drivers and rational for selections and evaluation metrics are described in table A-3. A description of potential SPMS applications, a recommended approach, and its desired performance are also provided.

Table A-3. The ECS: Failure Modes, Rationale, and Metrics

Application Name	Subsystem/ Component Description	Fault/Degraded Mode	Drivers/ Rationale	Metric
The ECS	Shut-off valves	Stuck open/closed, lack of diagnostic information	Major contributor to SIs	Troubleshooting time, SI.
	Engine air supply regulators	Sticky and improper operation	Major contributor to SIs	Troubleshooting time, SI, environmental impact
	Heat exchanger	Leaks, corrosion	Major contributor to SIs	Troubleshooting time, SI.
	Electrical motor driven fans, compressors, pumps and air separation/ inerting equipment	Winding and bearing failures in alternating current (AC) and brushless direct current (DC) motors	More prominent in new generation, more electric A/C. Impact not known.	SI

The ECS consists of a large number of relatively simple mechanical devices (valves, piping/ducts, pressure sensors, and heat exchangers). The ECS systems are notoriously hard to troubleshoot due to the lack of available sensor data and the complexity of the overall system. The nature of the ECS makes it difficult to duplicate in-flight behavior on the ground. The ECS is in the top five SI drivers. The result is a system that, as a whole, has a high failure rate because of the number of components. It is hard to diagnose/troubleshoot, causing it to fall into

the top five systems for SIs and maintenance man-hour costs. It may be possible to opportunistically implement prognostics for some components such as heat exchangers, valves, and motors, but its cost effectiveness will depend on limiting the cost of the SPMS application. The electrical signatures of many ECS components may be accessible from the power distribution system (PDS) at very high data rates. Such high rate data can provide torque efficiency estimates, and in some cases, might be used to determine bearing health for motors. Certain ECS elements, such as compressors/air cycle machines and fans, may have local motor controllers that mask these signals as seen from high in the PDS.

Depending on the type of valve, the appropriate sensor monitoring, and degradation trending may support opportunistic valve replacement. Monitoring transition times may indicate the presence of foreign material that may lead to a valve sticking in a position. The pressure delta across a valve could also be used to identify valves that are not opening or closing completely. The onset of motor winding failures/degradation is difficult to detect without special circuitry in the motor that may prove prohibitive.

The pressure delta across a valve could also be used to identify valves that are not opening or closing completely.

Winding and bearing failures of fan motors can drive air-turnbacks and diversions since a bearing failure can allow the fan blades to contact the fan housing (often plastic) and the resulting friction can generate large amounts of acrid smoke in the cabin. The onset of motor winding failures/degradation is difficult to detect without special circuitry in the motor, and that may prove to be too costly.

Corrosion sensors would be advantageous in supporting opportunistic maintenance for heat exchangers. Although it is not difficult to detect the existence of a fluid leak, pinpointing the source of the leak is troublesome without the addition of sensing capability. Better performance monitoring of ECS correlates to energy consumption. With efficiencies, for example, a cracked heat exchanger may raise fuel consumption.

If affordable methods (cost, size, weight, and power) to monitor ECS elements can be developed, wireless sensor applications may offer a means to make data available to support diagnostics and prognostics. In legacy aircraft, parameters available within the ECS control system are typically not available to the maintainer, and methods to extract that information will be pivotal to implementing effective diagnostics. In systems where consumables such as coolants are routinely checked, automatic monitoring should be considered for aiding pre-flight procedures.

A.1.1.12 Structures.

Structure subsystems/components, faults/degraded modes, drivers and rationale for selections, and evaluation metrics are described in table A-4. A description of potential SPMS applications, a recommended approach, and its desired performance are also provided.

Table A-4. Structures: Failure Modes, Rationale, and Metrics

Application Name	Subsystem/ Component Description	Fault/Degraded Mode	Drivers/Rationale	Metric
Corrosion	Structure below lavatories and galleys	Corrosion	Maintenance/Inspection cost	Inspection intervals, inspection time
Composite Structure	Composite structure	Damage during ground operations, failure of composite repairs	Advent of composite aircraft Ensure integrity of composite repair	SI, maintenance cost, availability
Undercarriage Structure	Undercarriage structure Front and main gear	Hard landing, life-ing of structure, Oscillation of front gear	Quantification of Hard Landing Incidents. Avoid unnecessary inspection effort. Crew reports front gear oscillation, which are frequently not substantiated.	Availability, SI discrepancy with crew reports, maintenance costs
Metal Structure	High-load structural hot spots	Fatigue damage, cracking	Reduce inspections in remote areas. Accurate, condition-based life-ing.	Inspection frequency, inspection cost, availability

A.1.1.13 Corrosion.

The payoff for monitoring corrosion is found in avoiding time-consuming inspections of inaccessible compartments, especially the structure under galleys and lavatories. Corrosion monitoring is performed by one of several means. One approach monitors the environment in an area and then estimates the amount of corrosion that could have occurred. Other approaches actively measure corrosion by placing sacrificial ‘canary’ material in areas of concern. Both of these methods are being flight tested. The primary issue with an environmental approach is correlating the environment to actual corrosion due to uncontrollable variables. For example, if a panel is protected by a corrosion prevention method that has not been compromised, it may last 15 or more years without the first indication of corrosion. However, if the corrosion prevention method is scratched or applied incorrectly, it may last 2 years before corroding. The environmental modeling technique cannot account for these variables. Sensor reliability and calibration are considerations that affect the overall solution. The reliability of the environmental sensors, which must function for 10-15 years between inspections, is a technical challenge as is the calibration of these sensors for the particular region where they are installed.

Research is ongoing to detect corrosion by locating active sensors (i.e., acoustic or ultrasonic) to detect pitting produced by corrosion. These methods are in the early Technology Readiness Level stages.

A.1.1.14 Composite Structures.

For example, monitoring composite structures for damage caused by cargo handling or food service trucks near access doors can reduce schedule delays. Such monitoring is done by actively interrogating the structure with an array of sensors/actuators. This approach is relatively mature, but requires significant onboard processing resources. The active interrogation can be triggered manually after an event or can be event-driven on power up.

Monitoring composite structural hot spots (areas of higher stress) can be done in a similar fashion. Acoustic methods can also be used to monitor crack formation and growth. The area of interest has to be continuously monitored.

The monitoring of composite repairs can be done by embedding a sacrificial conductor to detect delamination around the bond line. Such detection methods typically propose to use a Radio Frequency Identification tag to report the status of the bond.

A.1.1.15 Undercarriage Structure.

Based on aircraft dynamics, algorithms that estimate the load and damage to landing gear and undercarriage exist. These algorithms can register a landing as a hard landing and direct maintenance personnel to the appropriate areas to be inspected. Additional processing can provide a usage-based estimate of RUL. This capability reduces inspection times, aircraft downtime, and SI. The method does not require the addition of sensors, but extension of this concept with strain gages may be used to automatically compute aircraft weight as well as provide a more accurate estimation of landing gear life.

A.1.1.16 Metal Structures.

Monitoring high-stress structural areas can be done using a number of methods; although acoustic methods are becoming the most promising. This approach requires significant onboard processing and highly reliable or redundant sensors to monitor the structure over 20-30 year periods. The technology may be matured to the point of providing a prognostic. This would require high speed, onboard processing and communications capability. Eventually, the technology could provide a means to reduce the weight of structural members.

A.1.1.17 Fuel System.

Fuel control subsystems/components, faults/degraded modes, drivers and rationale for selections and evaluation metrics are described table A-5. A description of potential SPMS applications, a recommended approach, and its desired performance are also provided.

Table A-5. Fuel System: Failure Modes, Rationale, and Metrics

Application Name	Subsystem/ Component Description	Fault/Degraded Mode	Drivers/Rationale	Metric
Fuel Control	Filter, heat exchanger, boost pumps, main pump, flow divider, metering valve. FADEC controls	FADEC electronic failures Intermittents, heat exchanger leaks, pump, failure/degradation, filter clogging, valve clogging.	In top five subsystem SI drivers	MTBUMA NFFs System Checkout Mean time to repair (MTTR)
Fuel Management	Pressure/temp sensors, level sensors	Level sensor failures, sensors failed high or low, wiring.	Troubleshooting and maintenance time	MTBUMA MTTR Availability
	Boost pumps and valves (not associated with fuel control)	Fault isolation, foreign material, inoperative pumps and valves, pump degradation (degraded performance—shaft, bearing, and feed tubes), clogged filters	Troubleshooting and maintenance time	MTBUMA MTTR Availability

MTTR—Mean Time To Repair
FADEC—Full Authority Digital Engine Control
MTBUMA—Mean Time Between Unscheduled Maintenance Action
NFF—No Fault Found

A.1.1.18 Fuel Control.

Fuel control is among the top five subsystems in SIs and maintenance repair time. Fuel control consists of a series of components: fuel filter, heat exchanger, boost and main pumps, metering valves, flow divider, and nozzle.

The SPMS technology can detect and project fuel filter clogging. The health of boost and main pumps can be monitored directly or from the PDS. Heat exchanger leaks could be detected, but projecting growth may not be cost-effective. Data show frequent removal of the FADEC to address fuel control problems. More investigation is needed to understand the root cause of such removals.

Main fuel pumps are mechanically driven from engine power. Boost pumps, that are typically electrically driven, may be monitored from the PDS. Both have a relatively high reliability (>5000 hours), but aircraft have a number of these systems. Certain models of pumps and fault modes (such as bearing failure) can be predicted and detected. Some types of electrically driven boost pumps have experienced bearing failure in a short amount of time (<5 hours) and can be predicted in a laboratory environment.

A.1.1.19 Fuel Management.

Fuel-level sensor failures can cause inappropriate fuel transfer and uncertainty in remaining fuel levels. Detailed monitoring of pumps and valves would aid in isolating faults within the fuel

system, which is a recurring problem. Also, the fuel system incurs high maintenance costs because of the time required to troubleshoot a fault.
Further work is needed to clarify the SPMS application benefits for the fuel system. However, a major contribution would include diagnostics to address intermittents and wiring problems. Prognostics for pumps and control valves, where possible and cost-effective, would reduce support cost by opportunistic maintenance and reduce diagnostic ambiguity.

A.1.1.20 Electrical Power.

Electrical power subsystems/components, faults/degraded modes, drivers and rationale for selections, and evaluation metrics are described in table A-6. A description of potential SPMS applications, a recommended approach, and its desired performance are also provided.

Table A-6. Electrical Power: Failure Modes, Rationale, and Metrics

Application Name	Subsystem/ Component Description	Fault/Degraded Mode	Drivers/Rationale	Metric
Batteries	Batteries	Failure to supply power	In the top-five subsystem SI drivers	Availability SI
Power Control Units	Power control units for AC and brushless motors	Power supply—IGBT and MOSFET delamination.	Likely to become major maintenance driver for more electric aircraft.	Availability SI
Generators, Starter - Generators	IDG, starter generator	Gearbox gear and bearing degradation	SI especially in more electric aircraft.	SI Condemation costs

MOSFET—Metal-Oxide Semiconductor Field-Effect Transistor
IGBT—Insulated-Gate Bipolar Transistor
AC—Alternating Current
IDG—Integrated Drive Generator

An Electrical PDS consist of a number of hierarchical, digitally controlled electronic circuit breakers that control power to the loads on that branch of the system. These breakers also offer arc fault protection. Since the current is monitored by PDS, typically at a high data rate, that data could be used as inputs to SPMS applications. This method would require acquisition of the data within the PDS and the eventual processing of these data. Subsystem controllers used to drive brushless direct current (DC) motors may mask desired effects limiting the usefulness of these data. However, plans to monitor electrical loads should include consideration of the PDS data that may help avoid the addition of sensors on the particular subsystem of interest. The electrical system as a whole is in the top-five subsystem maintenance driver.

A.1.1.21 Batteries.

Some airlines have a policy where, if a battery fails in service, the battery and the charger are replaced as a set. In some aircraft it is difficult to troubleshoot between the battery and the charger. This policy was implemented to prevent a second delay if the first guess was wrong. This can lead to the impression that a component is more problematic than it actually is (i.e. the true failure rate may actually be less than half the total removals associated with SIs). It often turns out the problem is the charger, not the battery—but the delay usually manifests itself as a

dead battery. Methods to estimate battery life and managing recharging to extend battery life are nearly mature for a range of battery types (i.e., lead acid and lithium ion). Battery prognostics would reduce SIs and maintenance time.

Recommended Approach and Performance Level: A 10-day prediction horizon for battery prognostics should be possible. Diagnostics should be implemented for the charging system to reduce battery replacement costs. It may also be possible to predict the charging system health.

A.1.1.22 Power Control Units.

The most beneficial application would be electronics prognostics or usage-based life-ing to avoid in-flight failures resulting in schedule interruptions. Prognostics and usage-based life-ing methods are being developed, but are immature. Electronics life-ing may correlate to classes of intermittent faults (see sections A.1.1.24 and A.1.1.25).

A.1.1.23 Generator/Starter Generator.

Major failure modes for IDG and starter-generators include wiring/connection, bridge diode, bearings, and hydraulic system. Technology has been demonstrated to predict bearing and hydraulic system failures in the drive units. Prognostics or usage-based life-ing methods may also be available in the near future for winding and diode failures (see section A.1.1.5).

A.1.1.24 Electronics.

Electronics subsystems/components, faults/degraded modes, drivers and rational for selections, and evaluation metrics are described in table A-7. A description of potential SPMS applications, a recommended approach, and its desired performance are also provided.

Table A-7. Electronics: Failure Modes, Rationale, and Metrics

Application Name	Subsystem/ Component Description	Fault/Degraded Mode	Drivers/Rationale	Metric
Power Supplies	Power supplies	Capacitors, MOSFET, Control circuitry	Cause of NFFs in avionics	SI

A.1.1.25 Power Supplies.

Several technology developers have reported progress in predicting major component failures (i.e., capacitor, MOSFETs). Prognostic methods require access to the power supply's response to loads. Usage-based life-ing methods are also being developed that require environmental data. The decision to implement either method will be a trade-off between the coverage and additional data capture or processing required by the prognostic, versus the accuracy of the life-ing method and the remaining useful life.

A.1.1.26 Hydraulics.

Hydraulics subsystems/components, faults/degraded modes, drivers and rationale for selections, and evaluation metrics are described in table A-8. A description of potential SPMS applications, a recommended approach, and its desired performance are also provided.

Table A-8. Hydraulics: Failure Modes, Rationale, and Metrics

Application Name	Subsystem/ Component Description	Fault/Degraded Mode	Drivers/Rationale	Metric
Hydraulic System	• General	• Leaks • Low Quantity • Last minute servicing • Filter blockages	• In top-five subsystem SI drivers (double aisle)	• Availability • SI
Electrical Motor and Engine Drive Pumps	• AC motor and engine driven pumps	• Degrading seal wear leading to loss of pressure and leakage • Bearing failure	• SIs	• Availability • SI

A.1.1.27 Hydraulic System.

Hydraulic oil levels/quantity can be monitored to reduce instances of last-minute servicing and provide insight into leakage problems. Trending oil levels should enable opportunistic maintenance. Similarly delta pressure monitoring of filters should enable opportunistic replacement.

A.1.1.28 Electrical Motor and Engine Driven Pumps.

Prognostic algorithms have been demonstrated for hydraulic pump mechanical parts. It is reasonable to assume that a 10-day prognostic prediction is possible. Methods to detect and trend diagnostics for external seal leakage need further investigation.

A.1.1.29 Flight Controls.

Flight control subsystems/components, faults/degraded modes, drivers and rationale for selections, and evaluation metrics are described in table A-9. A description of potential SPMS applications, a recommended approach, and its desired performance are also provided.

Table A-9. Flight Controls: Failure Modes, Rationale, and Metrics

Application Name	Subsystem/Component Description	Fault/Degraded Mode	Drivers/Rationale	Metric
Ground Spoiler Linkage	Ground Spoiler System	Linkage failures	In top-ten subsystem SI drivers interruption	SI
Hydraulic Actuation	Hydraulic Actuators	Control valve leakage External leakage	In top-ten subsystem SI drivers interruption	SI
Electro-Mechanical Actuators	Electric Actuators	Thrust bearing failure Ball screw/screw drive failure Motor winding short	Use becoming more wide spread in more electric AC High temperature operation.	SI
Speed Brakes	Speed Brakes	Actuators	In top ten subsystem SI drivers interruption	SI

A.1.1.30 Ground Spoiler Leakage.

The underlying cause of spoiler leakage failures has not been determined.

A.1.1.31 Hydraulic Actuators.

A major failure mode of hydraulic actuators are control valves and seal leakage. Prognostic algorithms have been demonstrated for many types of valves that would enable opportunistic maintenance. Hydraulic actuators on commercial aircraft have a high reliability so the payoff of such a prognostic would depend on the frequency of valve failures and its consequence on SIs. Methods to detect seal leakage may supply further benefit.

A.1.1.32 Electro-Mechanical Actuators.

The use of Electro-Mechanical Actuators (EMAs) is increasing on current and future aircraft. The major EMA components are the electronic controller, brushless DC motor, and the ball screw or screw drive. Prognostic methods have been demonstrated for the mechanical ball screw or screw drive. Prediction of mechanical failures may support triggering of release mechanisms to avoid in-flight mechanical jams.

Diagnostics and usage-based life-ing methods may be effective for supporting opportunistic maintenance for the electronic controller and motor.

A.1.1.33 Windows.

Window subsystems/components, faults/degraded modes, drivers and rationale for selections, and evaluation metrics are described in table A-10. A description of potential SPMS applications, a recommended approach, and its desired performance are also provided.

Table A-10. Windows: Failure Modes, Rationale, and Metrics

Application Name	Subsystem/ Component Description	Fault/Degraded Mode	Drivers/Rationale	Metric
Windows	Flight compartment windows (No. 2 and 4)	Window heat failed on or off	In top-ten Subsystem SI, drivers interruption	Availability, SI
		Wiper assembly, including motor failures	In top-ten Subsystem SI, drivers interruption	Availability, SI

The SIs due to cockpit window problems are most often due to window heat which is necessary for maintaining the structural integrity of the window at altitude. Window heat failure can manifest itself as a cracked or delaminated window. Arcing and overheating at the window terminals is a common failure mode. This issue can cause flight deck smoke and fire events.

It is suspected that many of these problems could be addressed by design and reliability improvements (i.e., solid state power controllers), but prediction of window heat failure could alleviate many SIs.

A.1.1.34 Wiring.

Wiring subsystems/components, faults/degraded modes, drivers, and rationale for selections, and evaluation metrics are described in table A-11. A description of potential SPMS applications, a recommended approach, and its desired performance are also provided.

Table A-11. Wiring: Failure Modes, Rationale, and Metrics

Application Name	Subsystem/ Component Description	Fault/Degraded Mode	Drivers/ Rationale	Metric
Wiring	Cable, Harnesses	Chafing, broken damaged wire, fault isolation issues due to intermittent condition.	NFFs, incidents of wire shorts and damage to avionics	Availability, SI maintenance troubleshooting time and cost

Wiring problems are frequent concerns on modern aircraft. Faults associated with wiring and connectors such as chafing, broken wires, and intermittent connections combine to be a major maintenance driver for SIs and maintenance man-hours to resolve wiring problems.

There are a number of approaches to addressing wiring faults, which include the following:

- Time and frequency (spread spectrum) reflectometry to detect broken wires
- Acoustic methods to detect wire chafing
- Fiber embedded in overbraid to sense and prevent chafing
- Embedded or online wire fault detection and location implemented by locating electronics in connectors

Studies by Naval Air Systems Command and National Aeronautics and Space Administration have been done to define the wire fault problem and evaluate solution technologies. Several manufacturers (e.g., Eclypse International, 3M, and Northrop Grumman) provide off-the-shelf wiring diagnostic equipment. The general agreement is that these units perform well in situations with simple, known configurations, especially if a baseline has been established. If the configuration (e.g., position of other wires, loads, and impedances) is not fixed or a baseline has not or cannot be established, the accuracy of the technologies is lacking. Wiring approaches that maintain the relative location of wires in a wire bundle have been proposed (e.g. ribbonized, organized, integrated wiring).

Some of the technologies are being miniaturized to be implemented onboard and online either in connector shells or in subsystems. The major advantage of this approach is that it might be possible to better address the detection and location of intermittents.

Some of the technologies can be predictive, but this accuracy of predictions suffers from lack of consistency in wiring configurations and geometry. Chafing prediction, using acoustic methods (General Electric Research Center) or fiber sensing methods (Killdeer Mountain Manufacturing), are possible.