DOT/FAA/TC-13/23

Advanced Power Distribution

Federal Aviation Administration
William J. Hughes Technical Center
Aviation Research Division
Atlantic City International Airport
New Jersey 08405

January 2014

Final Report

This document is available to the U.S. public through the National Technical Information Services (NTIS), Springfield, Virginia 22161.

This document is also available from the Federal Aviation Administration William J. Hughes Technical Center at actlibrary.tc.faa.gov.

U.S. Department of Transportation
Federal Aviation Administration

NOTICE

This document is disseminated under the sponsorship of the U.S. Department of Transportation in the interest of information exchange. The U.S. Government assumes no liability for the contents or use thereof. The U.S. Government does not endorse products or manufacturers. Trade or manufacturers' names appear herein solely because they are considered essential to the objective of this report. The findings and conclusions in this report are those of the author(s) and do not necessarily represent the views of the funding agency. This document does not constitute FAA policy. Consult the FAA sponsoring organization listed on the Technical Documentation page as to its use.

This report is available at the Federal Aviation Administration William J. Hughes Technical Center's Full-Text Technical Reports page: actlibrary.tc.faa.gov in Adobe Acrobat portable document format (PDF).

Technical Report Documentation Page

1. Report No.	2. Government Accession No.	3. Recipient's Catalog No.
DOT/FAA/TC-13/23		

4. Title and Subtitle	5. Report Date
ADVANCED POWER DISTRIBUTION	January 2014
	6. Performing Organization Code 3E2Y8
7. Author(s) Fred Potter, Nicholas Locken, and Scott Telecky	8. Performing Organization Report No.
9. Performing Organization Name and Address Astronics Advanced Electronic Systems 9845 Willows Rd. Redmond, WA 98052-2540	10. Work Unit No. (TRAIS)
	11. Contract or Grant No. DTFACT-06-C-00034
12. Sponsoring Agency Name and Address U.S. Department of Transportation Federal Aviation Administration Northwest Mountain Region—Transport Airplane Directorate 1601 Lind Avenue, SW Renton, WA 98057	13. Type of Report and Period Covered Final Report
	14. Sponsoring Agency Code ANM-111

15. Supplementary Notes

The Federal Aviation Administration William J. Hughes Technical Center Aviation Research Division COR was Michael Walz.

16. Abstract

The continued safe operation of aircraft well into their expected service life depends on the safe and effective transfer of power and electrical signals between aircraft electrical components. The purpose of this project was to enhance current and develop new solid-state distributed power systems, with emphasis on intelligent power systems. To accomplish these objectives, an aircraft distributed power network test system was developed. Various aircraft loads (i.e., actuator motors, lights, pumps, etc.) were installed on the network to allow the exploration of transient load conditions. A graphical interface was developed to explore interface protocol and various display formats. Advancements in control logic were incorporated into the proposed Electrical Power Distribution System to improve fidelity of arc fault detection and prognostics. In addition, several conceptual designs for complete aircraft power distribution were evaluated and assessed for future aircraft viability.

17. Key Words	18. Distribution Statement
Electronic Power Distribution System, Solid-state power controller, Arc fault detection, Solid-state distributed power systems	This document is available to the U.S. public through the National Technical Information Service (NTIS), Springfield, Virginia 22161. This document is also available from the Federal Aviation Administration William J. Hughes Technical Center at actlibrary.tc.faa.gov.

19. Security Classif. (of this report)	20. Security Classif. (of this page)	21. No. of Pages	22. Price
Unclassified	Unclassified	130	

Form DOT F 1700.7 (8-72) Reproduction of completed page authorized

TABLE OF CONTENTS

			Page
EXECUTIVE SUMMARY			x
1.	INTRODUCTION		1
	1.1	A Brief History of Aircraft Power Technology	1
	1.2	Existing Electronic Power Distribution Technology	2
	1.3	Project Goals	3
2.	PROJECT REVIEW		4
	2.1	Creation of an Aircraft Electrical System Laboratory Test Environment	5
		2.1.1 Introduction	5
		2.1.2 Equipment and Fixtures	5
		2.1.3 Maximum Fault Current Determination	13
		2.1.4 Loads	13
		2.1.5 Playback of Recorded Load Waveforms	17
		2.1.6 The ECB Characterization	20
		2.1.7 Summary Data	20
		2.1.8 Results, Interpretation, and Next Steps	21
	2.2	Development of ECB Prototypes	22
		2.2.1 Summary	22
		2.2.2 The ECB Development	22
		2.2.3 The AC ECB	24
		2.2.4 The ECB Packaging	25
		2.2.5 The ECBU Architecture	26
		2.2.6 The ECBU Packaging	27
		2.2.7 The FAA Prototype	28
		2.2.8 Future Capability	28
		2.2.9 Results, Interpretation, and Next Steps	30
	2.3	The GUI (Display Systems) and Prognostics	31
		2.3.1 Summary	31
		2.3.2 Display Redundancy	32
		2.3.3 Maintenance Interface Considerations	32
		2.3.4 Development of the GUI	33
		2.3.5 Circuit Status Indication on the GUI	37
		2.3.6 Final GUI Implementation	38
		2.3.7 The Smart Panel	42
		2.3.8 Development of the Smart Panel	44

2.3.9 Smart Panel Switch Technology 47
2.3.10 Smart Panel Status Indications 48
2.3.11 Smart Panel With Lighted Buttons 48
2.3.12 Smart Panel and GUI Combination Unit 49
2.3.13 Prognostics 50
2.3.14 Results, Interpretation, and Next Steps 54

2.4 Matrix Switching 55

2.4.1 Introduction 55
2.4.2 Matrix-Switching Concept 55
2.4.3 Drawbacks of Conventional Power Distribution Architectures 56
2.4.4 Benefits of Matrix Switching 56
2.4.5 Matrix-Switching Prototype 57
2.4.6 Implementation of Matrix Switching 60
2.4.7 Expanded Matrix Switching 61
2.4.8 Results, Interpretation, and Next Steps 62

2.5 Advanced Circuit Protection 63

2.5.1 Introduction 63

2.5.2 The ECB Response Time Determination and Improvement 63

2.5.3 Fault Current Capability of the Prototype 64

2.5.4 Bolted Fault Trip Tests and False Trip Immunity Tests 64

2.5.5 Aircraft Load Tests 64

2.5.6 Control Module Development 64

2.5.7 High-Level Parallel Arc Detection on Secondary Loads 65

2.5.8 Develop Algorithm and Code for Serial Arc Detection on Secondary Loads 68

2.5.9 Develop Algorithm and Code for Low-Level Parallel Arc Detection 69

2.5.10 The GFI Protection 70

2.5.11 Results, Interpretation, and Next Steps 71

2.6 The PLC 71

2.6.1 Summary 71

2.6.2 Generic PLC Challenges 71
2.6.3 Evaluation of Commercial PLC Technology 73
2.6.4 Current Pulse Method 73
2.6.5 Experiments Conducted 74
2.6.6 Results, Interpretation, and Next Steps 75

3. PROJECT CONCLUSIONS AND OBSERVATIONS 76

APPENDICES

A—Test Report—Smart Panel Testing at the Federal Aviation Administration William J. Hughes Technical Center, February 7-9, 2012

B—Smart Panel Design Documentation and Installation Information

LIST OF FIGURES

Figure		Page
1	Panel With 100 Thermal CBs	1
2	The EPDS Installation on a Business Jet	2
3	The EPDS Diagram	3
4	Test Bench Area With Chroma, VisionXP, Cabinets, and Miscellaneous Equipment	6
5	Laboratory Bench Setup for ECB Characterization	7
6	The DC Power Source	8
7	The AC Power Source	8
8	VisionXP on Bench	9
9	Drip Test Fixture	9
10	The AC Variable-Phase Fault Switch	10
11	Guillotine Tester 1	10
12	Guillotine Tester 2	10
13	Wire Strand Test Fixture	11
14	Vibrator Shown With Series Arc Apparatus Mounted	12
15	Series Arc Test in Progress	12
16	Shaker Table Series Arc Waveform	13
17	Active Loads	14
18	The AC Passive Loads	14
19	The DC Passive Loads	15
20	The 28V Valve	15
21	Motor Generator	15
22	The 28 VDC Motor	16
23	The 28V Starter Motor	16
24	Variable Loads	16
25	Plot 1: Currents	19
26	Plot 2: Strobe Input Current	19
27	The 20A AC ECB Trip Curve	21
28	The ECB I^2t Current Protection Performance	23
29	The AC ECB Breadboard	24
30	The AC ECB Interrupting a Hard Fault	25
31	Typical DC ECB	26
32	The ECBU Control Architecture	27
33	The ECBU Package	28
34	The ECBU Concept	29
35	The ECB Module Thermal Study	30
36	Initial Format of GUI Display	33
37	Second GUI Display	34
38	Third GUI Display	35
39	Home Screen Concept	36
40	The ECB Symbology	36
41	The GUI Prognostics	37
42	Top-Level GUI Panel	38

43	System Select Panel	39
44	Status Select Panel	40
45	The ECBU Select Panel	41
46	The ECB Panel	42
47	Smart Panel Concept	43
48	Smart Panel Prototype	45
49	Smart Panel Topology	46
50	Smart Panel Connected to ECBUs	47
51	Switches With Status Annunciation	48
52	Status Annunciations	48
53	Smart Panel With Lighted Buttons	49
54	Smart Panel With Lighted Buttons and Monitor/Bezel Button Controller	50
55	Incandescent Load	51
56	Blower With 10% Restriction	52
57	Blower With 50% Restriction	53
58	Blower With 100% Restriction	53
59	Blower With Friction Applied to Impeller	54
60	Matrix-Switching Concept	55
61	Typical Small Aircraft EPDS	56
62	The EPDS Implementing Matrix Switching	57
63	Matrix-Switching Setup Sketch	58
64	Matrix-Switching Logic	59
65	Military Helicopter Application of Matrix Switching	61
66	Matrix Switching With Smart Contactors	62
67	Matrix Switching Responding to a Fault	62
68	Frequency Response Improvement to the ECB	64
69	Control Module	65
70	High-Level DC Arc on a 3A DC ECB	66
71	Inrush Currents	67
72	Parallel Arc Fault Bus Voltage	67
73	Nonperiodic Waveform	68
74	Periodic Waveform	68
75	Series Arc Fault Bus Voltage	69
76	Low-Level Arc in 28VDC Circuit	70
77	A GFI	71
78	Power System Noise	72
79	The Powerline as a Filter	72
80	Current Mode PLC	74
81	Current Mode PLC Simulation	75

LIST OF TABLES

Table		Page
1	Aircraft Loads	13
2	The ECB Status Definition	37
3	Matrix-Switching Logic	60

LIST OF ABBREVIATIONS AND ACRONYMS

μs	Microsecond
A/D	Analog-to-digital
AC	Alternating current
AFCI	Arc fault circuit interrupter
APU	Auxiliary power unit
Astronics AES	Astronics Advanced Electronic Systems
CB	Circuit breaker
CFR	Code of Federal Regulations
COTS	Commercial-Off-the-Shelf
DC	Direct current
DMM	Digital multimeter
DUT	Device under test
ECB	Electronic circuit breaker
ECBU	Electronic circuit breaker unit
EMI	Electromagnetic interference
EPDS	Electronic Power Distribution System
EPDU	Electronic Power Distribution Unit
FAA	Federal Aviation Administration
FDS	Flight Display Systems
FET	Field effect transistor
FSK	Frequency-shift keying
FTP	File Transfer Protocol
GFI	Ground fault interrupter
GPU	Ground power unit
GUI	Graphical user interface
I/O	Input/output
LED	Light-emitting diode
MFDU	Multifunction display unit
OFDM	Orthogonal Frequency Division Multiplexing
PC	Personal computer
PDS	Power distribution system
PDU	Power distribution unit
PLC	Powerline communication
SPI	Serial peripheral interface
WAV	Waveform Audio File Format
WOW	Weight on wheels
VDC	Voltage direct current

EXECUTIVE SUMMARY

The development of solid-state power-switching technology in the 1990s provided an opportunity to replace the thermal circuit breakers (CBs) with a reliable solid-state equivalent, with built-in arc fault detection and current monitoring. The electronic circuit breaker (ECB) also has the capability to be controlled remotely over digital data buses, so the ECBs can be located near the aircraft loads, drastically reducing the weight and the complexity of the power system wiring. Unlike a thermal CB, the ECBs do not have a wear-out mechanism, so switching the load no longer requires a relay or contactor in series with the CB.

The first Electronic Power Distribution System (EPDS) did little more than remove the CBs from the cockpit and improve reliability and fault-detection capability. The basic power system architecture remained unchanged. The breakers' ability to take on more control, power management, and load diagnostic tasks was recognized by the Federal Aviation Administration (FAA), and the Advanced Power Distribution Project (DTFACT-06-C-000034) was awarded to explore the ways in which an optimized solid-state power distribution system could be developed to take full advantage of ECB technology.

This project focused on improving the safety and functionality of the EPDS beyond the current state set by electromechanical and existing solid-state technology. The ECBs have many control and monitoring capabilities that exceed a simple circuit protective device, and implementing an aircraft power architecture that makes use of these unique capabilities will serve to remove more weight and cost from the aircraft, as well as increase the reliability and functionality of the aircraft systems. The EPDS has the following six unique capabilities:

1. To be decentralized and distributed throughout the aircraft, reducing wire weight and wiring complexity.

2. To function as a relay/contactor as well as a protective device, ensuring the elimination of most of the relays in an aircraft.

3. To measure and analyze load current to detect anomalies and faults.

4. To be controlled either automatically, as part of a control system, or manually, by a human input device.

5. To collect information (data) transmitted over the powerlines and transmit it to the cockpit or record it for use by maintenance personnel.

6. To perform simple control functions without additional hardware. Many aircraft systems are simple control systems (e.g., heat control, light dimming, and pump control) that easily integrate into the EPDS without the addition of any hardware, saving the expense and weight of a separate line replaceable unit.

To investigate the possibilities for increasing the functionality of EPDS, a realistic yet controlled testing environment had to be created; thus, an aircraft power system breadboard was first defined and then created in a laboratory test environment. The loads for the laboratory were

selected based on the commonly found electrical systems in Part 23 and Part 25 aircraft. The loads that could not be obtained for laboratory use were categorized as to current signature so that they could be successfully simulated with electronic loads.

After the first step of creating a laboratory environment had been completed, existing ECBs were tested and analyzed, and the data were used to create prototypes of the next generation of ECBs. The ECB prototypes were designed to be more flexible in installation and application than the older ECBs and to have increased ability to host fault detection algorithms and load control/monitoring algorithms. Thermal studies and load studies were performed and documented as part of the design process. Both 28V direct current (DC) ECBs and 120V three-phase alternating current (AC) ECBs were prototyped and tested.

To control and monitor the ECBs and their associated loads, examples of graphical user interfaces (GUIs) were developed and tested. The prototype GUI was hosted on an IBM® touch-screen personal computer to simplify the development process. Simple load diagnostics and various display graphics were also investigated as a part of this development. A mechanical switch version of a human interface was also prototyped as a lower cost alternative to the graphical display. Both these human input devices were integrated with a prototype AC Electronic Power Distribution Unit (EPDU) and a prototype DC EPDU into a portable unit, which was ground tested on the Boeing 737 "Ground Bird" aircraft at the FAA William J. Hughes Technical Center, Atlantic City International Airport, NJ. The tests were designed to verify that the prototype equipment could function in an actual aircraft, so load switching, transient, and fault tests were successfully conducted on the unit.

Matrix-switching architecture allows source power to be rerouted around defective wiring. When combined with decentralized secondary distribution, this is a powerful concept to provide no loss of secondary power when a main bus feeder becomes defective. A drawback of this approach is that large devices are needed to perform the switching on large power feeds, making this technique most useful on military and large commercial aircraft.

Advanced fault detection algorithms were developed and tested, with the goal being to better detect low-level parallel arc faults and reliably detect series arc faults. An algorithm that allows unambiguous detection of series arcs was developed and tested, and it is hoped that the same algorithm will be useful in detecting parallel arcs as well. The algorithm was specifically developed to reject the noise caused by pulsing loads, such as motor brushes and flashers that have caused false trips with other algorithms.

As the final step, methods of using the power system as a data-transmission network were explored. A commercial solution was purchased and tested under high noise conditions, with mildly encouraging results. This system is expensive, so some other ideas were suggested, the most promising of which was to use current-encoded pulses to send data from a load back to the ECB and receive the information with the existing ECB hardware. This idea is explored in the

project Sensory Prognostics and Monitoring Systems Implemented in an Electronic Power Distribution System[1] (DTFACT-09-C-00018).

[1] Potter, F. and Locken, N., "Sensory Prognostics and Monitoring Systems Implemented in an Electronic Distribution System," FAA report DOT/FAA/TC-13/14, May 2013

1. INTRODUCTION.

1.1 A BRIEF HISTORY OF AIRCRAFT POWER TECHNOLOGY.

Thermal circuit breakers (CBs) have been used for the protection of aircraft wiring almost since their invention in 1924. The thermal CB provided a way to automatically disconnect a load from the power system if a fault occurred, hopefully before a hazardous condition developed, and the aircrew or mechanics had the ability to reset the CB when the fault was cleared. If the electrical load needed to be reduced and multiple switched power buses to groups of CBs provided a crude method of load management, individual loads could also be turned off by means of the CBs.

As electronics and electrical systems became critical to the safe flight of the aircraft, the complexity and size of the supporting aircraft electrical systems grew. The number of CBs in the cockpit increased significantly, with some commercial aircraft having up to 400 CBs arranged in multiple panels. Even smaller, business-type aircraft often approached the 200-breaker level. The wiring to the breakers became correspondingly complex and heavy (see figure 1). A need for emergency, pilot-activated load management (load shedding, smoke clearing) was observed, thus even more bus structure, wiring, bus contactors, and control switches were added.

Figure 1. Panel With 100 Thermal CBs

Studies performed by the Federal Aviation Administration (FAA), the U.S. Navy, and others began to show that wiring damage due to normal wear and tear and wire insulation aging were contributing to an increased number of aircraft electrical fires. The thermal CB was unable to detect the arcing caused by wire failure that had often caused fires and it became obvious that a better protection technology was needed. In 2002, the FAA provided funding to several

companies to develop arc fault CBs to address this issue. The CBs were tested and proved to be effective, but the cost and complexity of the aircraft wiring was not addressed.

1.2 EXISTING ELECTRONIC POWER DISTRIBUTION TECHNOLOGY.

Over the last several years, several aircraft have been certified with Electronic Power Distribution Systems (EPDS), shown in figures 2 and 3. This system is highly automated and requires little pilot input.

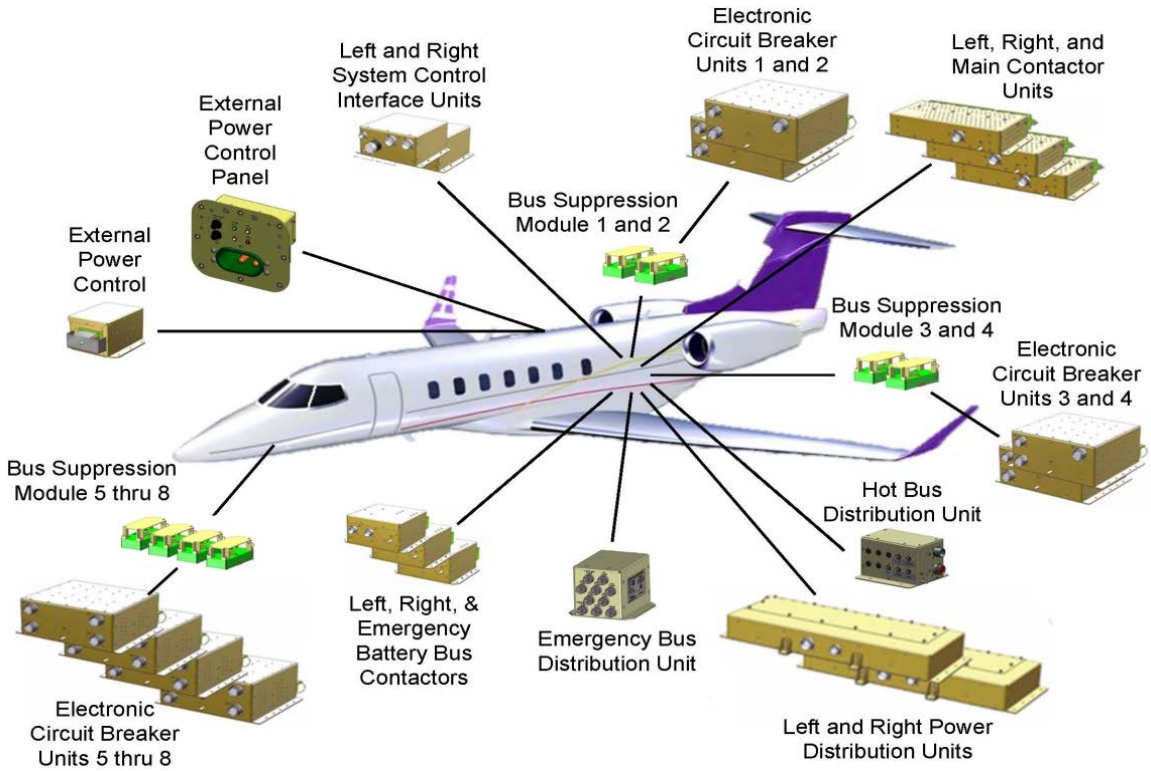

Figure 2. The EPDS Installation on a Business Jet

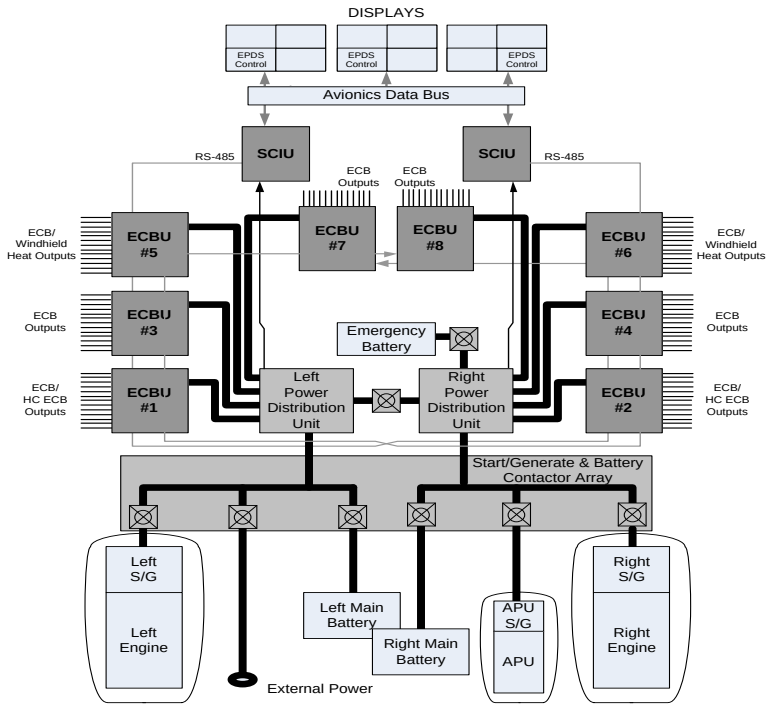

Figure 3. The EPDS Diagram

System development tasks are much more complicated with an EPDS because of its increased functionality and sophisticated interface, requiring redundant communication buses and processors to ensure that there are no single point failures. Software also plays a major role in EPDS function and must be developed and verified per the DO-178 software standard to ensure proper functionality. The higher development costs result in a system that provides more functionality, safety, and weight savings than a thermomechanical system. The EPDS elements are distributed within the airframe to simplify and reduce the wiring complexity. The interface to the system is via the avionics system, with status information and manual commands sent to the system via redundant RS-485 buses. Many simple control systems, such as windshield heat control, thrust reverse deploy, and fuel-pump management, have been integrated into this system. This system makes good use of some of the abilities of EPDS technology, but many areas of opportunity remain to be explored.

1.3 PROJECT GOALS.

The goals of this project were to explore EPDS technology, understand the design tradeoffs, and define and test ways to expand on the basic abilities of an EPDS to provide additional useful functionality with little or no additional equipment cost.

An EPDS has the following six basic abilities:

1. To be decentralized and distributed throughout the aircraft, reducing wire weight and wiring complexity.

2. To function as a relay/contactor as well as a protective device, ensuring the elimination of most of the relays in an aircraft.

3. To measure and analyze load current to detect anomalies and faults.

4. To be controlled either automatically, as part of a control system, or manually, by a human input device.

5. To collect information (data) transmitted over the powerlines and transmit it to the cockpit or record it for use by maintenance personnel.

6. To perform simple control functions without additional hardware. Many aircraft systems are simple control systems (e.g., heat control, light dimming, and pump control) that easily integrate into the EPDS without the addition of any hardware, saving the expense and weight of a separate line replaceable unit.

To help define what functionality can be added to an EPDS, a working aircraft power-system breadboard was defined and then created in a laboratory environment. From this first step, prototypes for the next generation electronic circuit breakers (ECB) were developed, along with examples of graphical user interfaces (GUI) to control the prototypes. The next step was to look at the ways in which the power distribution elements could be installed as a system in the aircraft. Advanced fault detection algorithms were developed and tested, most notably to better detect series and parallel arc faults. As the final step, methods of using the power system as a data-transmission network were explored.

2. PROJECT REVIEW.

The specific project objectives were to:

- Define a typical aircraft electrical system and obtain/create equipment to implement the defined system in a laboratory environment.

- Develop a solid-state hardware prototype.

- Develop a GUI and prognostic algorithms.

- Develop a system capable of matrix switching.

- Implement advanced circuit protection in the power distribution system (PDS).

- Investigate methods of powerline communication (PLC) for possible implementation in the PDS.

This section of the report summarizes the completion of these objectives, with only the most important elements included. The individual task reports generated during the project contain the details of the work performed.

2.1 CREATION OF AN AIRCRAFT ELECTRICAL SYSTEM LABORATORY TEST ENVIRONMENT.

2.1.1 Introduction.

A study of the electrical equipment in common use in transport aircraft was completed, and a series of bench test fixtures, power sources, and aircraft equipment was created or procured to implement a laboratory simulation of a typical aircraft electrical system. The laboratory system also included power distribution elements, such as solid-state switches, wire, contactors, transfer switches, and the following aircraft power sources: 115VAC/400Hz, 115VAC/variable frequency, 28 voltage direct current (VDC), and various batteries (i.e., lead acid, lithium/ion, and NiCad). The equipment can be used to accurately configure all or part of an aircraft power system for experimentation, troubleshooting, or development of new equipment. The laboratory equipment was used to characterize the performance of the ECBs previously developed to set a baseline for functional and safety improvements. The loads that were purchased or simulated were then characterized to determine their electrical load signatures. The signatures were recorded and saved for conditions, such as aircraft startup, normal operation, and shutdown. A device to play back the waveforms contained in the FAA's Electrical Load Database was also developed, so that any load in the database could be simulated by playing back the waveform data into a commercial programmable electronic load. Subsystem faults were also investigated using fault creation tools that were developed specifically for this project and are documented in this report.

2.1.2 Equipment and Fixtures.

2.1.2.1 Power Test Bench.

The power test bench shown in figures 4 and 5 provides a place to develop and test alternating current (AC) and direct current (DC) power components and systems. The bench has computer-adjustable aircraft-quality power sources, both AC and DC, that can be used for nominal system tests and to perform power quality tests. Sufficient space and equipment are available to create an entire aircraft power system, including multiple power sources and bus transfer capability. The bench also has a variety of typical aircraft loads to be used in system testing. The addition of loads to the bench is a continuous process, with new loads being added when necessary. The bench has a variety of test and measurement equipment to enable load and system parameters to be measured, recorded, and uploaded to a File Transfer Protocol (FTP) site for FAA access.

Figure 4. Test Bench Area With Chroma, VisionXP, Cabinets, and Miscellaneous Equipment

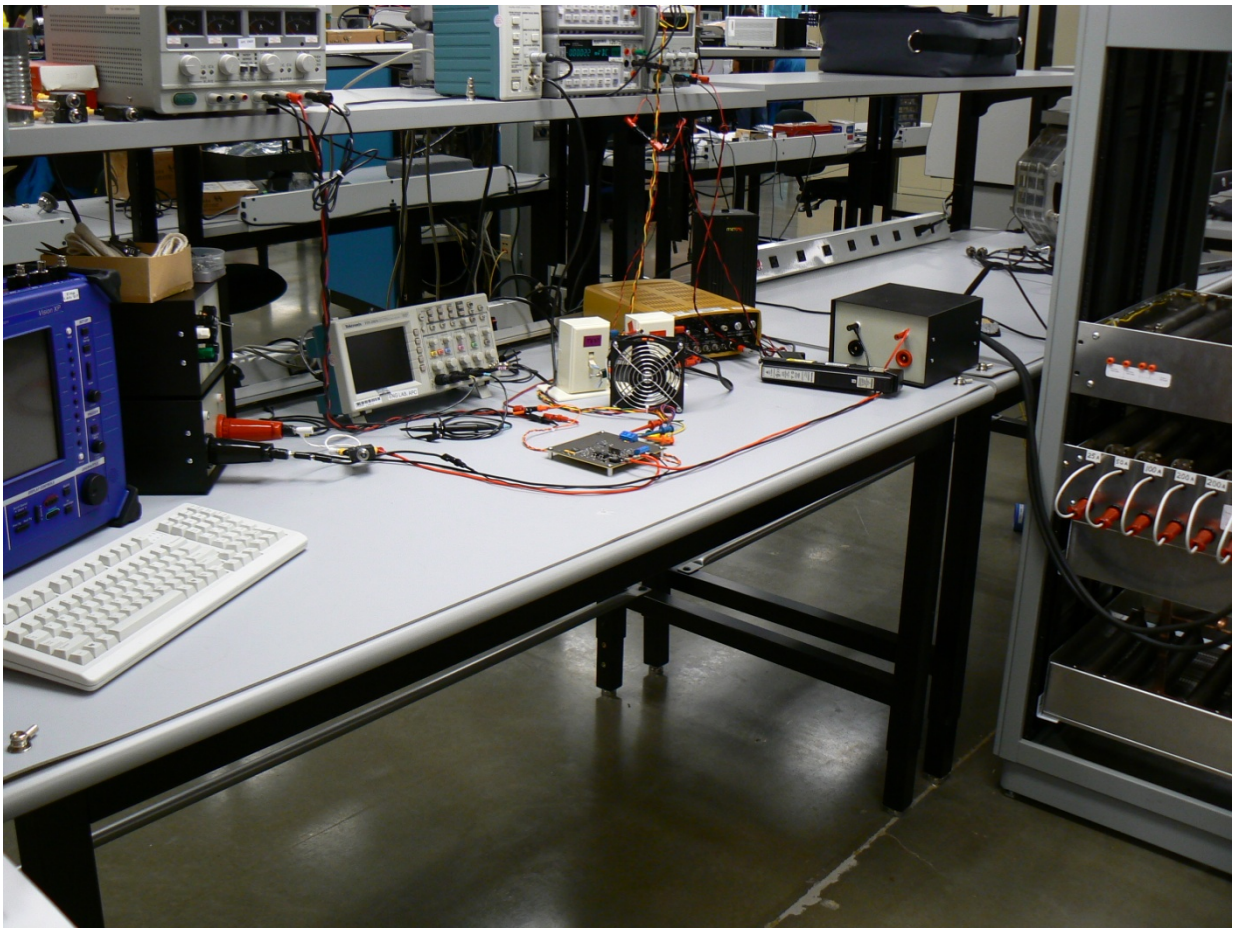

Figure 5. Laboratory Bench Setup for ECB Characterization

2.1.2.2 Power Sources.

A number of power sources were acquired for test purposes. They included a 500A DC source (see figure 6), 12 kilovolt amperes AC Chroma power supply (see figure 7), aircraft batteries, and several smaller supplies. A 00 gage line was also run to our starter-generator development laboratory so that actual aircraft generators could be used as power sources for tests. Laboratory power at 60 Hz, with up to 100A breakers, was also available.

Figure 6. The DC Power Source

Figure 7. The AC Power Source

2.1.2.3 Measurement Devices.

The Nicolet VisionXP data acquisition system shown in figure 8 was the main device used for acquiring test data. There were also several Tektronix® scopes for higher resolution data acquisition, as well as general purpose multimeters, signal generators, and an Agilent arbitrary waveform generator.

Figure 8. VisionXP on Bench

2.1.2.4 Fault Test Fixtures.

Fixtures and equipment were built to create various wiring system faults. Creating realistic aircraft faults was a necessity for the laboratory. Equipment was built to simulate water drips on wiring bundles (see figure 9), faults at various phases in an AC waveform (see figure 10), and random arcing events (see figures 11 and 12).

Figure 9. Drip Test Fixture

Figure 10. The AC Variable-Phase Fault Switch

Figure 11. Guillotine Tester 1

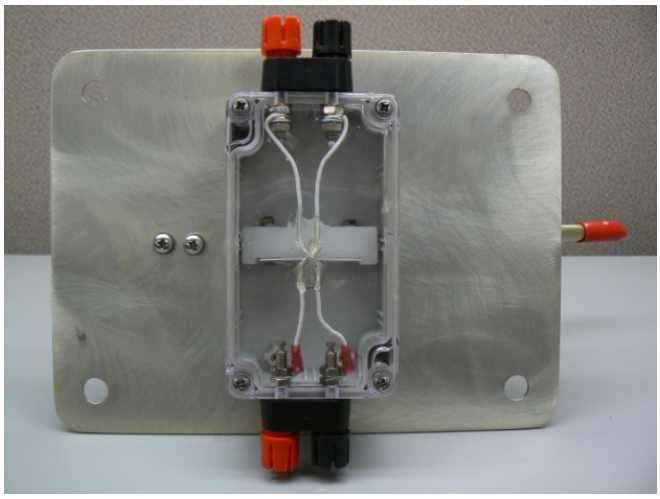

Figure 12. Guillotine Tester 2

Another simple device (see figure 13) was built to create a single arc event that repeats. This device allows a strand of wire to be used to short out a load and creates an arc of duration and magnitude proportional to the size and type of wire strand used.

Figure 13. Wire Strand Test Fixture

In addition, the laboratory has various mechanical and electronic switches that can be used to create overloads and hard faults of various durations, as well as a switch that can be used to produce series arc events when grouped with an arbitrary waveform generator and a fixed load.

2.1.2.5 Series Arc Vibration Test Fixture.

The arcing of electrical wiring is linked tightly with the high vibration environment of an aircraft. A vibration table is very useful in studying arc events, but a laboratory quality vibration table would have been too expensive and too large for general test use. A simple source of random vibration that is portable and inexpensive was needed. A search turned up the dental vibrator, used during the making of false teeth (see figure 14). This device produces a very random high vibration environment on its surface, ideal for the creation of series and parallel arc events (see figure 15).

Figure 14. Vibrator Shown With Series Arc Apparatus Mounted

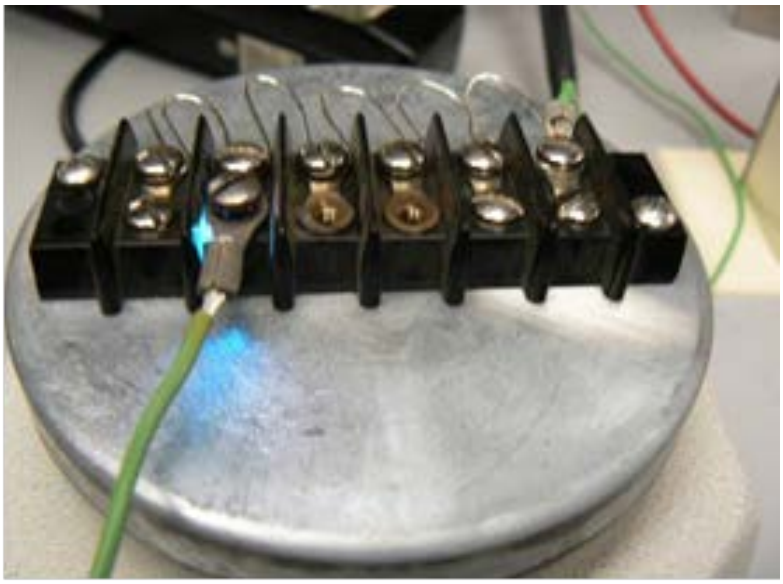

Figure 15. Series Arc Test in Progress

The variable-speed vibration-control feature made this vibrator an excellent choice for general purpose use. It is solidly constructed with a cast-metal housing, 4-1/4″- (10.8 cm-) diameter removable plastic top, and shock-absorbing rubber feet, with a net weight of 5 lbs, 2 oz (2.33 kg).

The waveform produced by the vibration table is shown in figure 16.

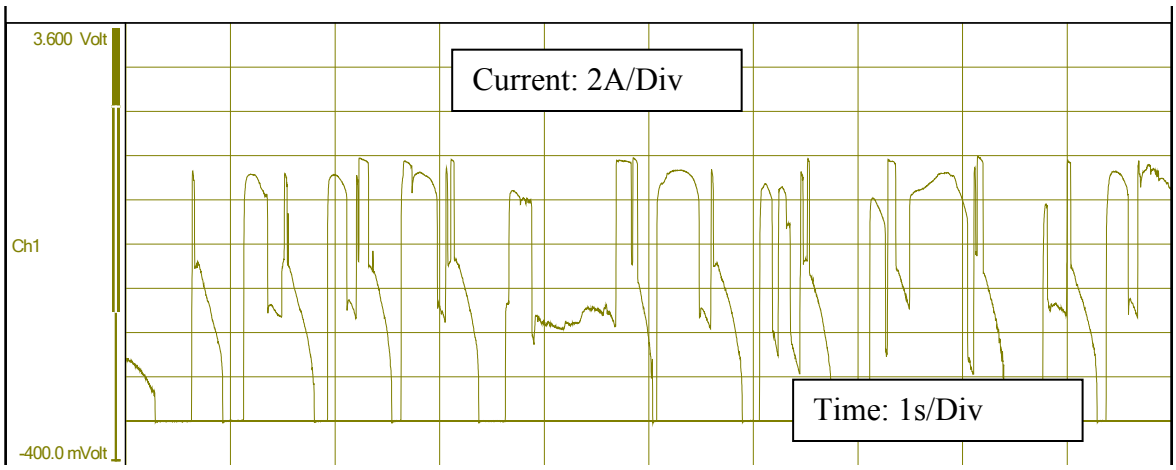

Figure 16. Shaker Table Series Arc Waveform

2.1.3 Maximum Fault Current Determination.

Fault currents of up to 1500A are theoretically possible in a 28 VDC electrical system, with the use of special low-impedance sources and heavy wiring, but fault currents in an actual aircraft will be lower. The goal of these tests was to determine a realistic fault current in a 28V electrical system at the secondary feeder level. Informal tests with various wiring schemes indicated that on the 25A secondary load circuits, a maximum fault current of less than 1000A is to be expected. The first test demonstrated 700A at 30V from the linear power supply and 580A at 25V from the battery. After decreasing the passive load from 0.036 ohm to 0.025 ohm, the second test verified 800A at 28V from the linear power supply and 800A at 25V from the battery.

2.1.4 Loads.

Table 1 shows how aircraft loads can be categorized.

Table 1. Aircraft Loads

Load Characteristic	Examples	Comments
Resistive	Resistor load boxes, heater elements	Very predictable
Incandescent	Exterior lighting	Has a unique inrush surge that can reach 10x the normal current; the surge duration depends on filament type
Capacitive	Linear power supplies for avionics equipment	Inrush depends on design
Inductive	Motors, pumps, valves, actuators, ballasted arc lamps	Certain induction motors can have a complex characteristic
Complex	Switching supplies, strobes, electronic ballasts, avionics, radios, public address amplifiers	Has a complex set of current waveforms

The laboratory must have an adequate supply of aircraft loads (see figure 17 and figures 20 through 23) and test loads (see figures 18, 19, and 24) to ensure thorough testing to verify that the power systems tested do not have difficulty protecting and controlling the loads.

Figure 17. Active Loads

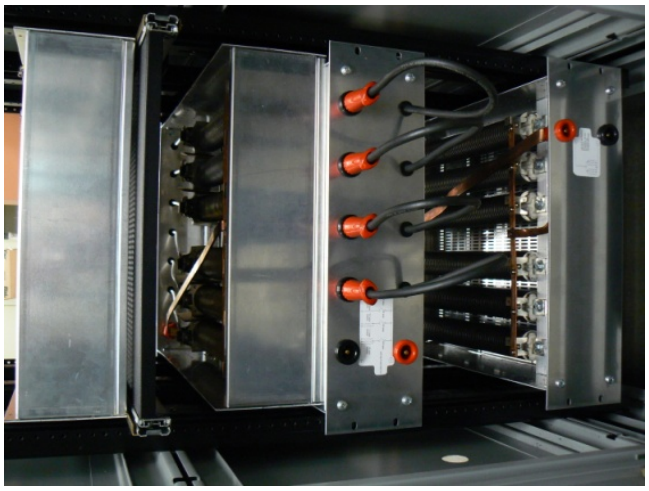

Figure 18. The AC Passive Loads

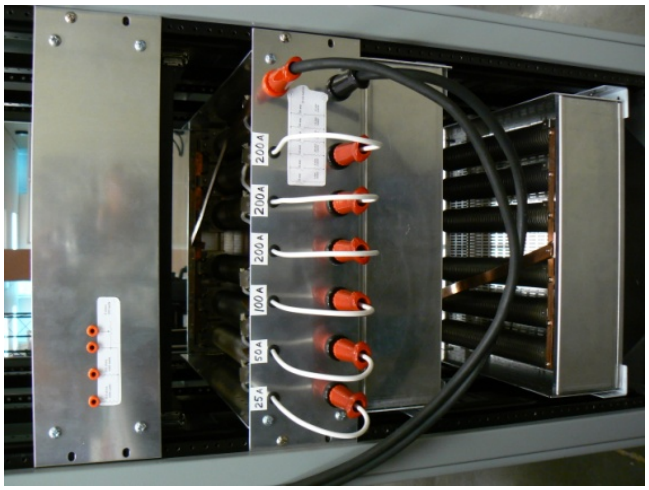

Figure 19. The DC Passive Loads

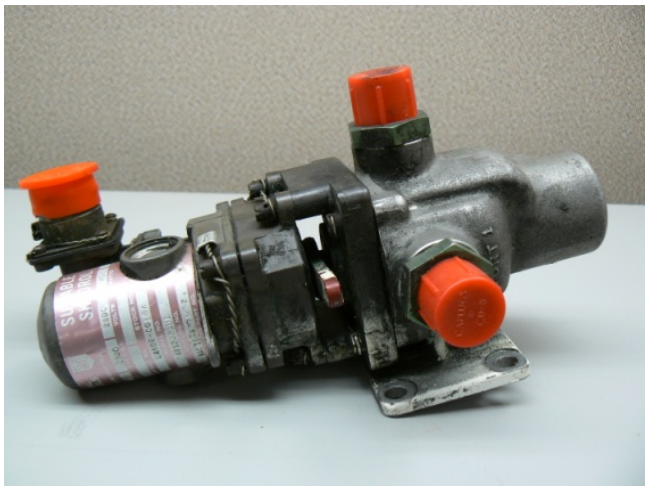

Figure 20. The 28V Valve

Figure 21. Motor Generator

Figure 22. The 28 VDC Motor

Figure 23. The 28V Starter Motor

Figure 24. Variable Loads

In addition to the loads shown above, Astronics Advanced Electronic Systems (Astronics AES) has a selection of aircraft lighting devices (landing lights, marker lights, strobes, and position lighting) manufactured by our sister division, Luminescent Systems, Inc. Additional loads are constantly being acquired and waveform signatures can be played back from the FAA database.

2.1.4.1 Aircraft Load Characterization.

All typical aircraft load data identified in the previous paragraph were characterized, captured, and stored, either on high-speed scopes or with the Nicolet VisionXP. Test data are available as standard JPG or spreadsheet files or in the Nicolet VisionXP format on an FTP server available to the FAA.

2.1.4.1.1 Characteristics Measured.

The characteristics measured for typical aircraft loads identified were as follows:

- Startup current
- Run current
- Measure turn on and off under nominal conditions
- Measure turn on and off at DO-160-defined abnormal voltages
- Measure at variable loading conditions as applicable
- Measure at faulted loading conditions as applicable
- Measure while switching between power sources

2.1.5 Playback of Recorded Load Waveforms.

The FAA has created and maintained a library of current and voltage waveforms originating from a large number of aircraft loads. The waveforms are stored in .NRF files created by Nicolet data acquisition devices, which have become a standard for recording waveforms. The waveforms needed to be recreated in the lab so that a wide variety of loads could be used in test setups without physical samples of each load being necessary. Investigation revealed that the Nicolet Perception software could create a Waveform Audio File Format (WAV) file, which could be played back as analog signals on any computer that has an audio card. If the analog signals are played back into the analog program input of an electronic load that has this option, the electronic load will recreate the current waveform of the original load.

2.1.5.1 Procedure Step 1: Convert .NRF Files to WAV Sound Files.

To convert an .NRF file to a WAV file:

1. Open the file using Nicolet Perception software.
2. Select the proper channel (i.e., channel labeled IA (input current)).
3. Place vertical cursors around point of interest.
4. Under “automation,” select “display post processing.”
5. Under “export to,” select “wave sound” and then select “configure.”
6. Define the folder and select “use audio rate,” then select “11025.”
7. Select “OK.”

2.1.5.2 Procedure Step 2: Play Back WAV Sound File

Play back the file using Windows Media Player® on a personal computer (PC) or any other audio device capable of playing a WAV file.

2.1.5.3 Procedure Step 3: WAV File Signal Driving a Programmable Load.

1. Connect the audio output (L or R channel) directly into the external programming terminals on the electronic load.

2. Load the output jack with a 1k ohm resistor (the audio output signal slowly drifts away from zero with no load on it). Remove the 1k ohm just before playing the WAV file, or compensate for it with the volume control.

3. Select the current range on the load for the correct scaling and adjust the signal level using the volume control on the PC for the desired output current level.

2.1.5.4 Example: Using the TDI Power, Inc. Dynaload® Model #RBL488.

1. The audio output signal should measure 1.4V peak (corresponding to the 78A peak input current to the strobe).

2. When using the external programming input on the Dynaload, a 0V to 10V signal will produce a 0% to 100% current for the chosen current range. Reverse the wires to the programming pins to change current polarity.

3. The Dynaload has a 20A, 200A, and 600A current range. Select the 600A current range.

4. The external programming voltage level required for 78A at the 600A range calculates to 1.3V (i.e., (78/600)x10 = 1.3V).

5. Use the volume control on the PC to reduce the output signal from 1.4V to 1.3V.

6. The power source is an 800A DC power supply, 15A thermal breaker, and 15A ECB module in series with the load, current measured using a 500A DC current probe.

2.1.5.5 Measured Playback Test Results.

Plot 1, shown in figure 25, is the input and output to the Dynaload.

CH1 (yellow): Input voltage to the programmable load (i.e., 1.3V peak) (500mv/Div, 5ms/Div)

CH2 (green): Load current (i.e., 70A peak) target was 78A peak (20mv/Div, 5ms/Div, 1mv/Amp)

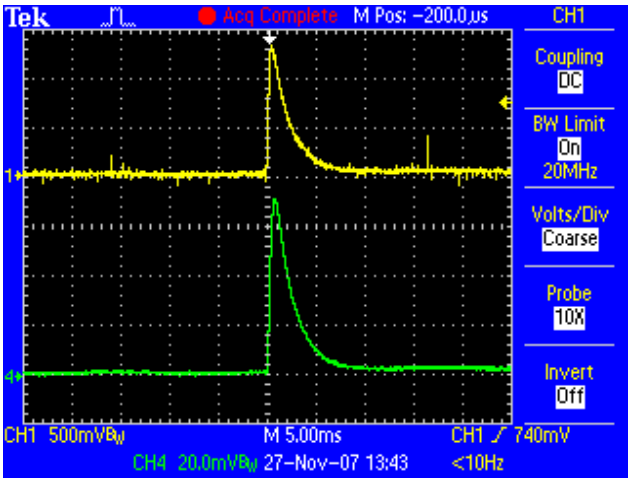

Figure 25. Plot 1: Currents

Plot 2, shown in figure 26, is the .nrf file from the FAA database (strobe input current).

Time scale: 5ms/Div

Current scale: 10A/Div (-10A bottom, 90A top)

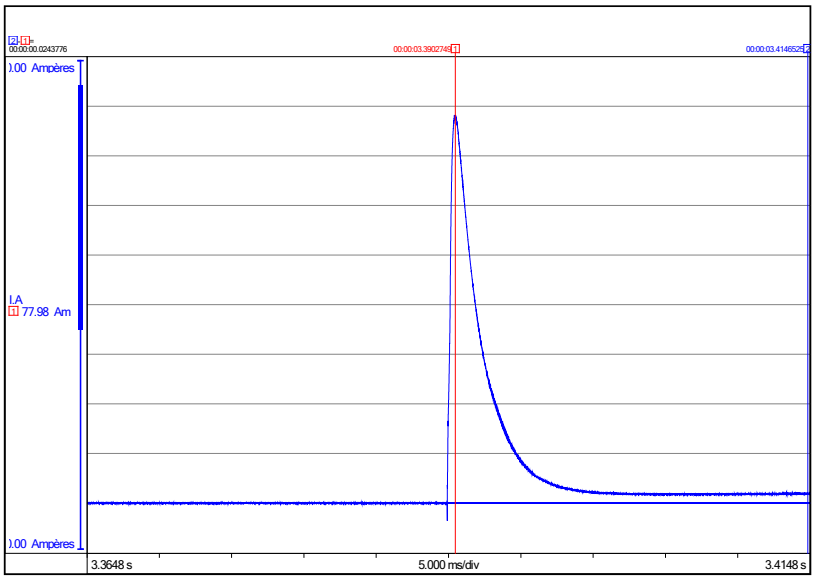

Figure 26. Plot 2: Strobe Input Current

The peak current in the .NRF file measured 78A. The peak output current from the Dynaload measured 70A. At 5 ms, both measured 10A. The results demonstrate good regeneration of the waveform.

2.1.6 The ECB Characterization.

The AC and DC ECB breadboards/test circuits were characterized as a part of this task to provide a performance baseline for fault-detection algorithm development. Test data are available as standard JPG or spreadsheet files, or in the Nicolet VisionXP format on an FTP server available to the FAA.

2.1.6.1 Characteristics Measured.

The characteristics measured were as follows:

- I^2t curves
- 10x to 16x current versus time performance energized
- 10x to 16x current versus time performance nonenergized
- Bolted fault
- Parallel arc faults
    - Grounded razorblade test
    - Single strand of wire shorting an energized circuit test
    - Turning on into a shorting single strand of wire test

2.1.6.2 Test for Nuisance Tripping.

To test for nuisance tripping:

1. Apply real aircraft loads in the laboratory and test for nuisance tripping under nominal and abnormal voltages, abnormal loading, faulted loading, and switching between power source conditions.

2. Apply FAA database profiles graphically (nonsimulated) to the ECB and test. Create a compliance matrix (Pass/Fail) for each load of interest.

3. Apply simulated load profiles of interest by analog injection of waveform generator into the ECB's summing node and test.

2.1.7 Summary Data.

Figure 27 shows the trip curve of a 20A AC ECB. As can be observed, the lower the current applied, the longer it takes for the ECB to trip. The min, max, and mean were all calculated from the MS3320 trip curve, which was the desired ECB curve. This test was repeated for both AC and DC ECBs; these data help classify the current abilities of the ECBs and determine what needs to be improved, if any action needs to be taken. The key characteristic of trip curves is that they are all the same when normalized, regardless of breaker type or rating.

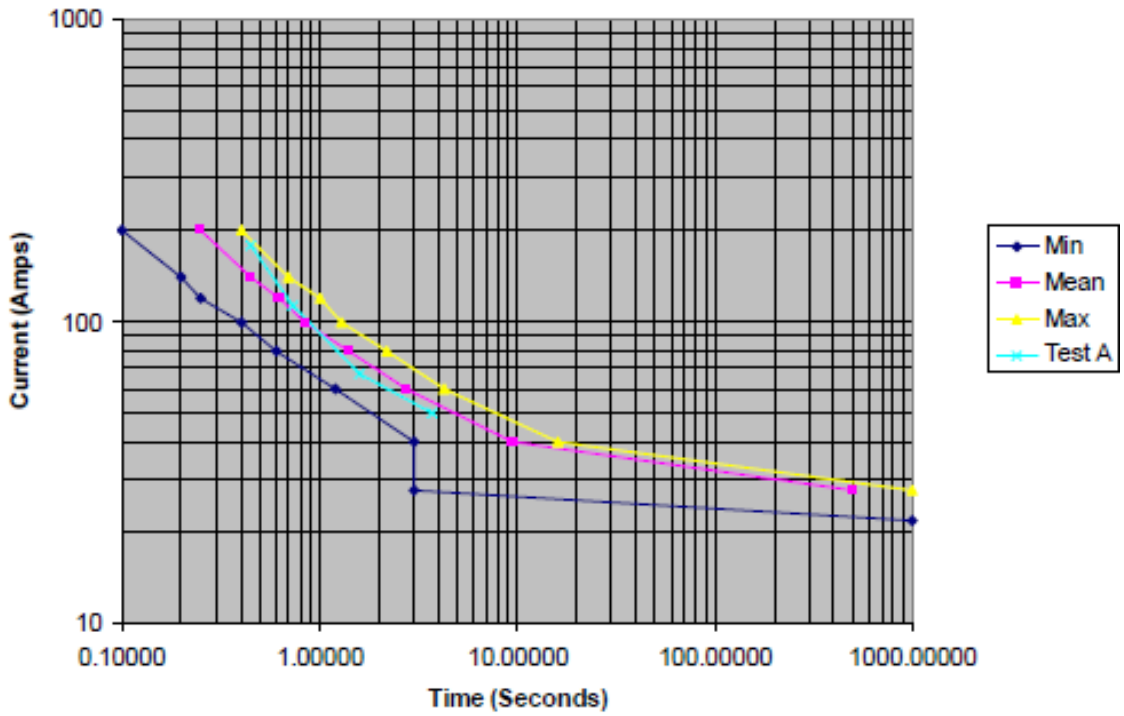

Figure 27. The 20A AC ECB Trip Curve

Additional tests were performed, as listed in section 2.1.4.11, to characterize the behavior of the ECBs under a wide variety of circumstances. These data provided information regarding the ECBs' current functionality and helped troubleshoot for abnormal behavior.

2.1.8 Results, Interpretation, and Next Steps.

Examples of tests, and what was learned or accomplished through them, are as follows:

- Circuit response to pulsed and step loads—The intent of these tests was to categorize the response time of the ECB to current changes.

- Salt water drip test—This test was done to check the load fault performance of the AC ECB breadboard. No major issues were found and the ECB breadboard performed as expected, except that there was a longer detection time for the negative input (an additional 15 µs) than for positive input.

- Pulse loading in various regions—These tests were performed simply to characterize the breadboards and gain a more comprehensive understanding of their behavior. For the most part, breadboards performed well and yielded expected results. When discrepancies occurred, the sources of error were easily resolved.

- Various load signature characterization tests—As depicted in section 2.1.6, loads were subjected to many different conditions and their load signatures were obtained.

- Load signature data captured on an aircraft, in the laboratory, or taken from the FAA database are now integrated with the data acquired internally, creating an even larger catalogue of electrical signatures for testing.

2.2 DEVELOPMENT OF ECB PROTOTYPES.

2.2.1 Summary.

The ECB hardware prototypes were designed and built, based on previously developed circuitry. The ECB and the Electronic Circuit Breaker Unit (ECBU) (which holds multiple ECBs) have a flexible architecture that allows adjustments for different distribution bus types. Individual ECBs were designed for each of the common aircraft bus voltages (115 VAC/400Hz, 115 VAC/variable frequency, 28 VDC, and 270 VDC). The system provides safe distribution of electrical energy to multiple loads, reduces power conductor bundles, reduces weight, and shortens power runs. The system continuously monitors load current and bus voltage and has the ability to provide current and voltage information at 1/s intervals, although modification to 10/s is possible.

The system has programmable load-shedding abilities and can be programmed to switch power to different outputs to circumvent perceived damage.

The system includes high-level parallel arc and series arc fault interruption capability to afford increased levels of wire protection. The protection logic is able to detect and interrupt arc faults, bolted faults, high contact resistance, intermittent shorts, damage due to loose terminals, and has immunity to false tripping on normal and abnormal aircraft conditions.

The mechanical architecture was designed to support a flexible modular approach, with plug-in ECBs and plug-in data bus interfaces. The design is flat, so the power distribution components can fit inside the space usually allowed for CB panels.

The ECBs are stand-alone plug-in modules with two to four output channels, depending on current rating and, in this format, can be constructed for 28 VDC, 270 VDC, and 120 VAC power systems. Each ECB has its own power supplies and microprocessor controller and will operate as a CB independently of input bus control status.

2.2.2 The ECB Development.

The DC ECB electrical design used as the basis for this task is a proven Astronics AES technology that has been qualified for use in commercial transport aircraft, including software qualification to Radio Technical Commission for Aeronautics (RTCA) DO-178B, level B. The AC ECB design is a modification of the DC design, with the addition of the components needed to handle the negative half cycle and the increased voltage stress of the 120 VAC power system.

2.2.2.1 The ECB Current Protection Technology.

Overcurrent and short-circuit protection of each ECB is independent of the data input/output (I/O) bus to the ECB or the status of the power distribution unit (PDU) controller processor. The

typical I^2t current protection characteristic, shown in figure 28, emulates the performance of a thermal CB. Note that the ECB protection is guaranteed within the limits of figure 1 over the full operating temperature range, whereas the thermal CB performance limits are considerably less accurate over an equivalent operating temperature range. The precision of the trip curve may cause problems with some aircraft system designs that heavily load the CBs, or have high inrush requirements, and count on the trip curve being at the high end of the limit at nominal room temperatures. These designs need to use slightly higher ECB ratings or special trip curves. The ECB I^2t current protection is implemented with a software-defined algorithm and, thus, the characteristic can easily be tailored for specific loads or specific customer-defined requirements.

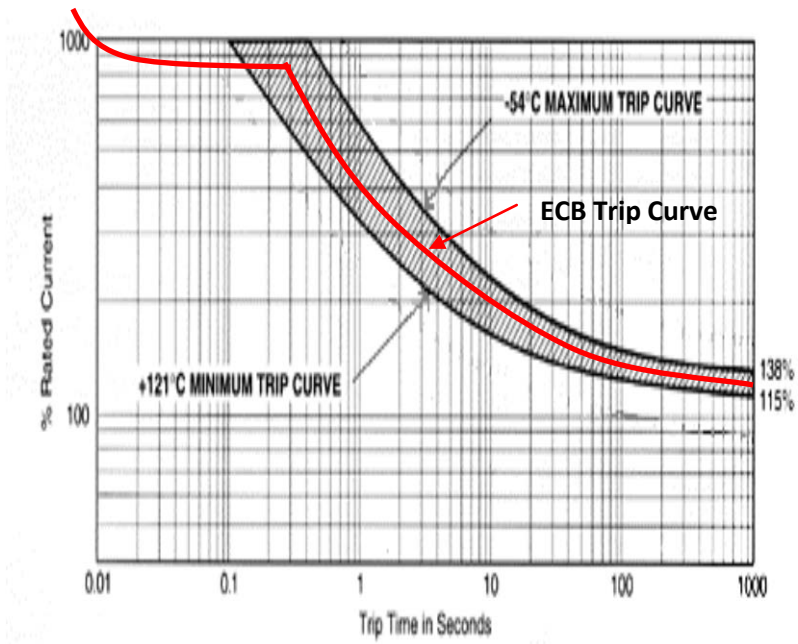

Figure 28. The ECB I^2t Current Protection Performance

The ECB has a fast-response current-limit to protect the solid-state devices inside of it against hard faults on the load wiring. The ECB fast-response current-limit protection also ensures that the load and the wiring are protected, even in the event that a hard short or a high-level parallel arc fault is applied to the load. The fast-response current-limit threshold, established based on the maximum current rating for each ECB, is not subject to programming changes and is engineered to prevent normal load inrush transients from causing false trips.

2.2.2.2 The ECB Architecture and Enhanced Reliability Features.

The ECB technology uses an integrated digital controller interface. This interface and control architecture is designed for easy integration with the aircraft avionics and systems management suite. The ECB continuously monitors nearly all subsystem functions and can assist the pilot to manage the aircraft by virtue of the high level of integration and automated or semiautomated control functions. The power distribution system incorporates self-contained data bus and communications, fault monitoring software, and current and voltage monitoring and reporting capabilities.

2.2.3 The AC ECB.

The AC ECB (see figure 29) is identical in control concept to the DC ECB, whereas the power and current monitoring circuitry is different so it can handle the AC waveform. Figure 30 shows the AC ECB interrupting a hard fault.

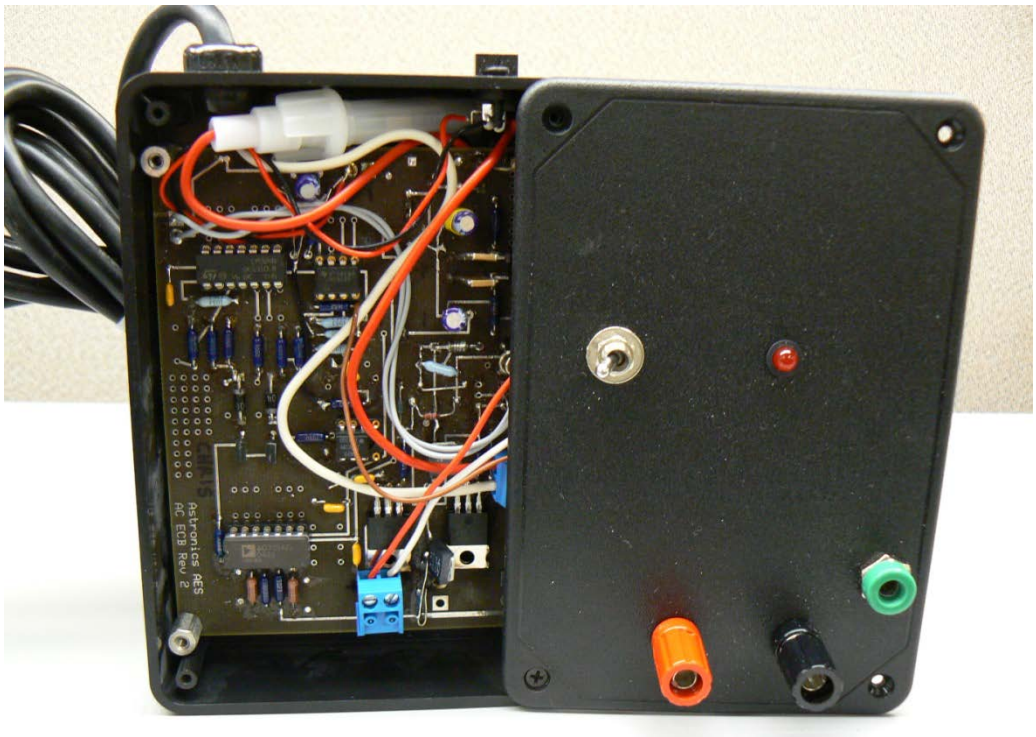

Figure 29. The AC ECB Breadboard

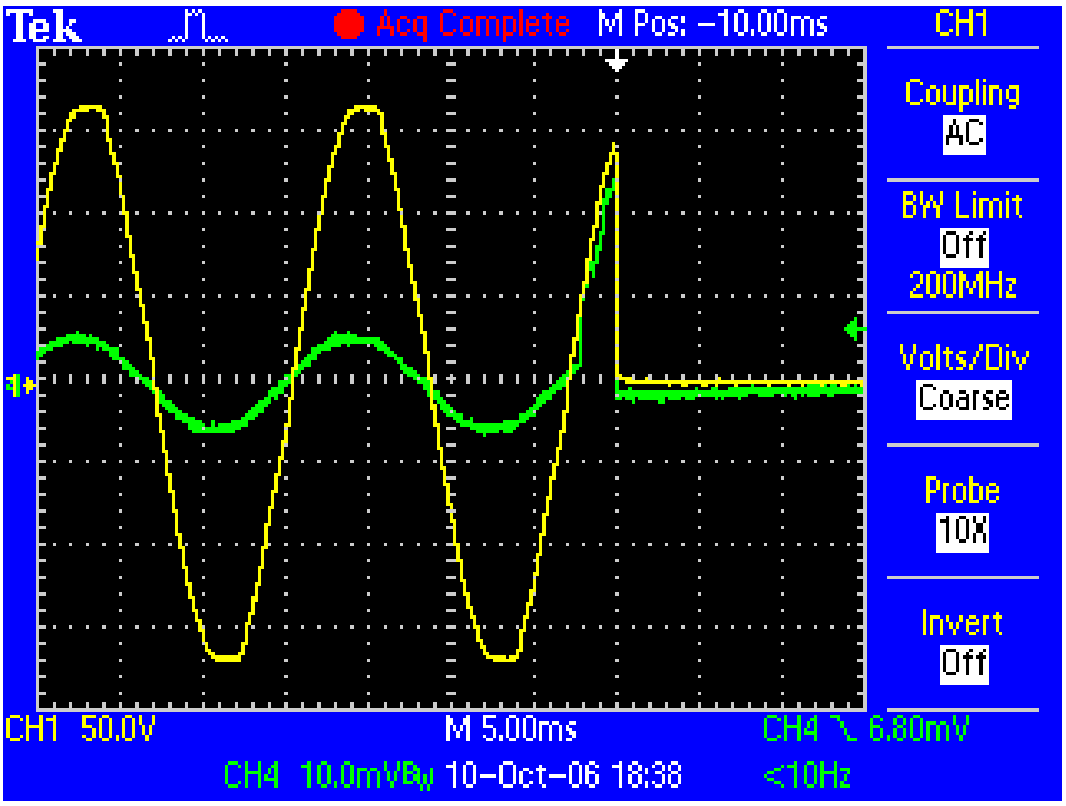

Yellow = 50 v/div, Green = 2A/div

Figure 30. The AC ECB Interrupting a Hard Fault

2.2.4 The ECB Packaging.

The DC ECBs shown in figure 31 are packaged in a replaceable module that plugs into the ECBU. The ECBs have a molded plastic shell and the circuit boards contained within hold all of the surface-mounted electronic components. The small amount of heat generated by the electronics is transferred to the bus bars rather than into the shell. The boards are conformal-(paralyne-) coated to provide moisture resistance and to add an additional protective layer to the electrical traces.

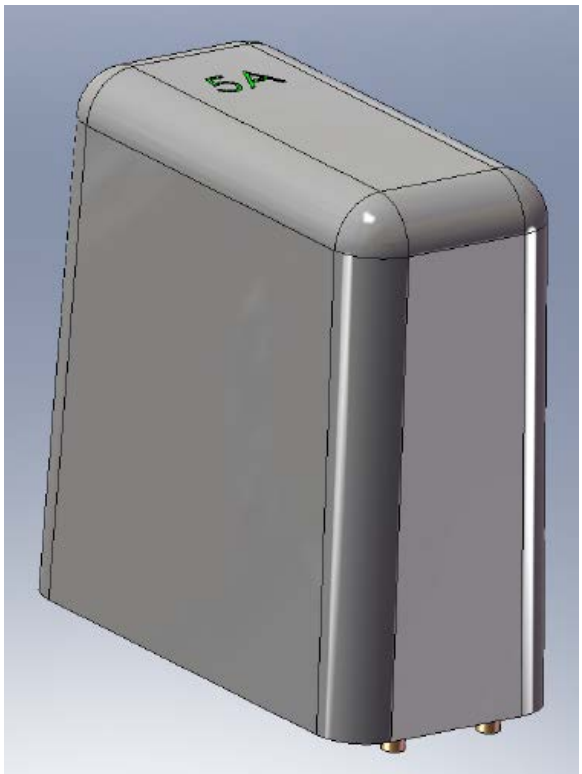

Figure 31. Typical DC ECB

2.2.5 The ECBU Architecture.

The ECBU architecture shown in figure 32 is based on the one used successfully in the Eclipse 500™ aircraft and redeployed in the Learjet 85™ and other aircraft. The unit has redundant RS-485 inputs to communicate with external controllers.

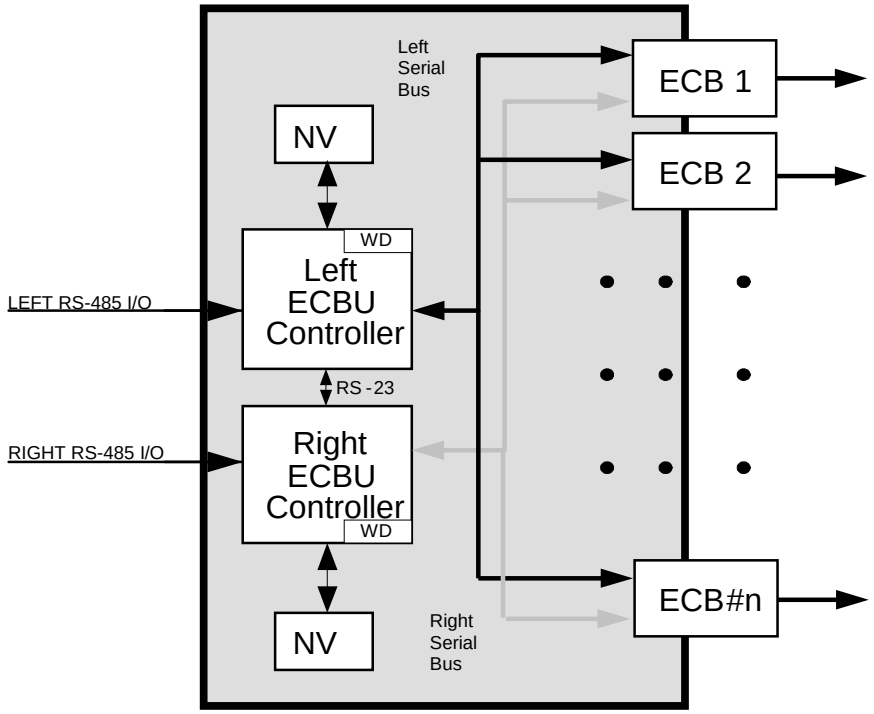

Figure 32. The ECBU Control Architecture

Redundant controllers monitor and control the operation of all of the ECBs. Nonvolatile memory is provided to store configuration information, ECB status, and fault data. Redundant buses, processors, memories, and power supplies are used in an aircraft to prevent a single failure from causing multiple ECBs to malfunction, which is a certification requirement for flight-critical systems. The prototype constructed for this program contained only a single copy of the control processor, buses, supplies, and memories.

2.2.6 The ECBU Packaging.

The ECBU (see figure 33) consists of an unsealed sheet metal enclosure housing a motherboard and a bus bar structure for input power. Circular connectors are provided for outputs and can be specified to the end user's requirements. The motherboard, interconnections, and connectors are sized to handle a maximum of a 15A breaker in each position. The design philosophy is to size the ECBU for the maximum ECB size that can be physically plugged into the socket, then allow smaller ECBs to be used.

The ECBs are housed within the enclosure that plugs into the bus and motherboard. ECB retention is provided by the removable cover. The ECBs that plug into the ECBU carry their own part numbers and can have 2, 4, or 8 independent outputs, depending on current rating.

Figure 33. The ECBU Package

The ECBUs are intended to be identical in design and architecture, but are built with different-length motherboards and chassis to accommodate differing ECB population requirements. This allows for the smallest and lightest unit to be used in each location.

2.2.7 The FAA Prototype.

2.2.7.1 Differences From Concept.

To facilitate testing and development, the FAA laboratory prototype, shown in figure 33, has a few minor differences compared with the original design (see figures 34 and 35). These differences are:

- The ECBs have one serial bus input instead of two. This change was made to reuse an existing microprocessor and the previously developed ECB software (only one serial I/O was available) and to make analog-to-digital (A/D) inputs available for arc fault detection software.

- The ECBU has one RS-485 input instead of two. This change was made to reuse the existing controller microprocessor and software (only one serial I/O was available) and to simplify the development of new software.

2.2.8 Future Capability.

The laboratory prototype, being modular, can be easily upgraded to support the following additions:

- Supplemental parallel arc detection circuitry and algorithms

- Series arc detection circuitry and software
- Revised and improved GUI interface to the ECBU

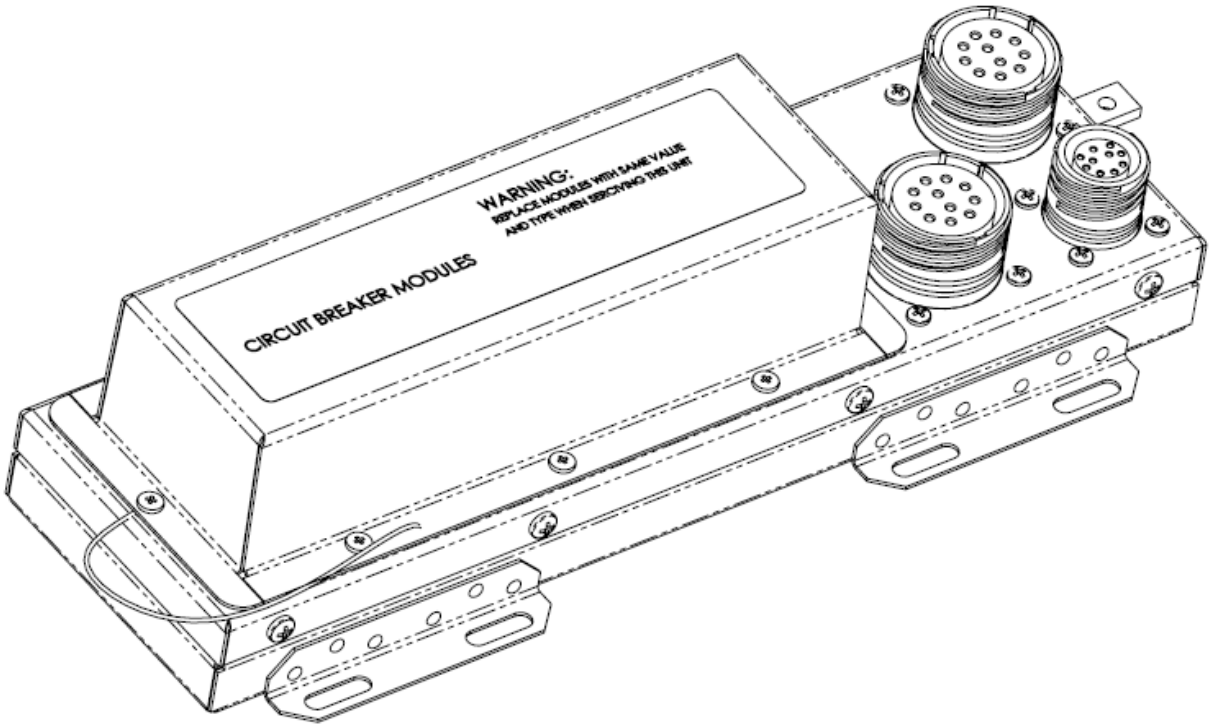

Figure 34. The ECBU Concept

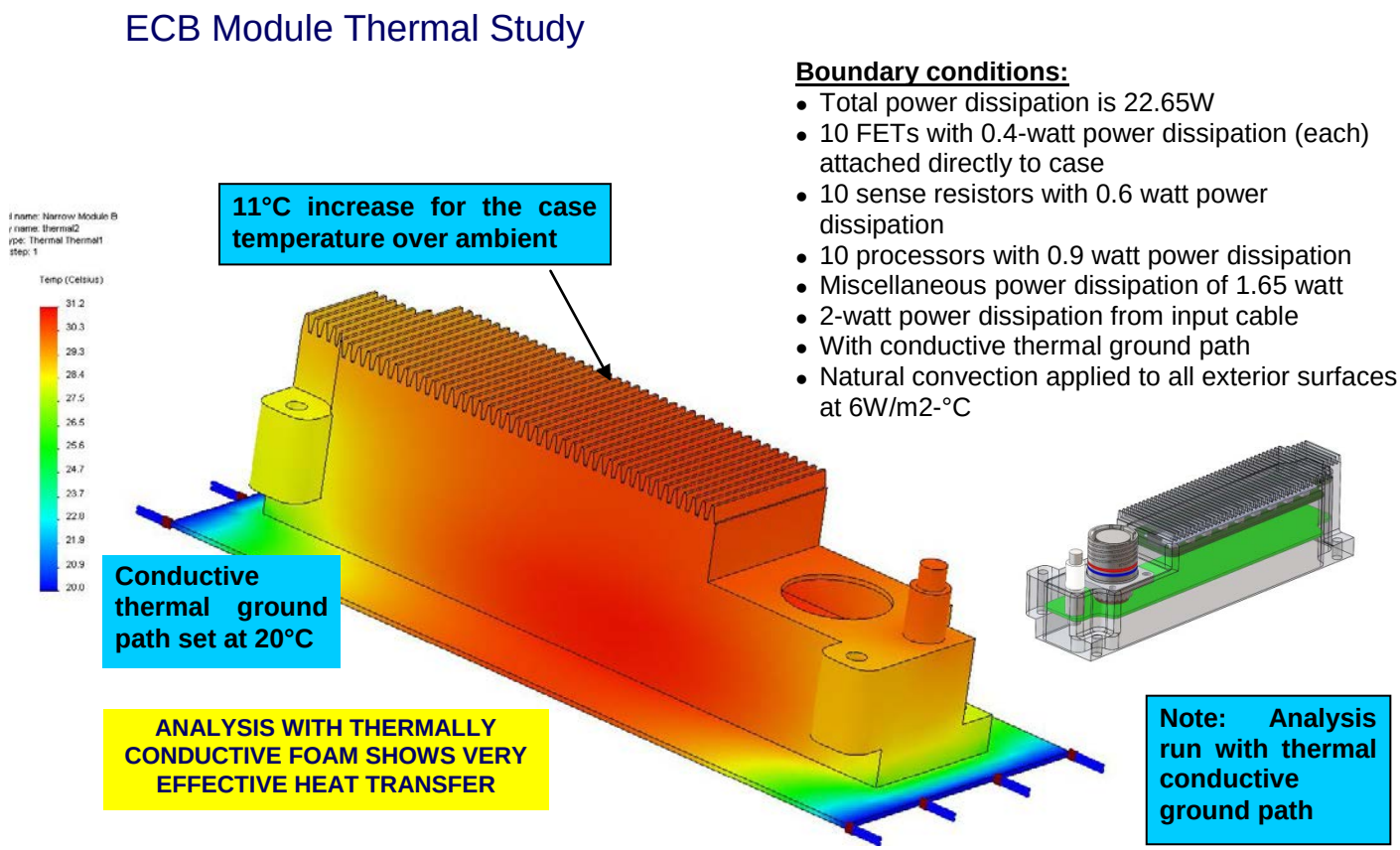

Figure 35. The ECB Module Thermal Study

2.2.9 Results, Interpretation, and Next Steps.

Compared to the previous generation of ECBU hardware, the prototype has improved robustness, especially for short circuits, as well as new arc fault algorithms. The results of prototype testing demonstrated advanced arc fault (parallel and series) protection.

The ECBU incorporates self-contained data bus and communications, fault-monitoring software, and current and voltage monitoring and reporting capability.

The ECBUs were combined with user interfaces and were ground-tested using the FAA-owned Boeing 737 aircraft, where an evaluation of the following characteristics was performed:

- The AC and DC circuit protection: series and parallel arc faults
- Human factors: assessment of the smart panel in a lifelike setting
- Benefits of a configuration and the diagnostics-prognostics display
- Future evaluation of Advanced Fault Diagnostics (i.e., the distance to a fault), prognostic algorithms, automatic load shedding, and fault tolerance

For more information, see the test report (appendix A).

2.3 THE GUI (DISPLAY SYSTEMS) AND PROGNOSTICS.

2.3.1 Summary.

The GUI for a flat-panel display was developed for human interface with the ECBU prototype. A monitoring protocol, display format, and control logic were defined and documented. The GUI was written in Visual C, which can be modified to run on different display/computer platforms. A Microsoft® Windows®-based platform was chosen for this development, which made the development tasks easier, but greatly slowed the interface speed between the display device and the ECBU.

Astronics AES also designed and produced a portable, suitcase-operated EPDS that included an integrated display/GUI for continual load monitoring, reporting, and direct ECB control. The demo kit included multiple resistive loads that could be controlled concurrently and monitored. This demo kit will aid in showcasing the work done on this program.

A display interface using a traditional switchlike interface was also created during this project. Since it is a computer-controlled device rather than just a panel of "dumb" switches, the name smart panel was applied to this interface. The smart panel/EPDS was produced for installation into an FAA-owned 737 aircraft. It demonstrated DC and AC ECB technology, as well as a new smart panel button user interface and the latest implementation of the GUI. The system was provisioned with an interactive display that provides future capability for prognostics reporting. This was later used to retrofit the FAA-owned 737 and helped demonstrate the performance of the developed hardware and associated health-monitoring functions.

Both aircrew interface and maintenance interface were addressed in the development, with aircrew access to many functions being restricted and full access to all functions being granted to maintenance. Human factors issues were considered, especially relating to presenting fault and monitoring status to the user in an intuitive way. Since the GUI software also collects and processes the real-time current data generated by the ECBs, it is the logical place to implement some simple diagnostic and prognostics algorithms, in addition to the storage of data for later analysis. Display screens for current versus time graphs were programmed and tested by creating normal and abnormal load conditions and faults. These graphical current displays made it easy to observe and diagnose faults, and can be used for predictive analysis.

It is essential to provide meaningful data to allow the pilot to make or validate flight-critical decisions in a timely and safe manner. On legacy aircraft, pilots are trained to follow specific procedures, given a particular failure mode. If a flight-critical load has a fault condition, this may entail manual load shedding, reconfiguring how the aircraft flies, or a combination of both. On future aircraft, these procedures may be automated, with the pilot being aware of them for validation purposes only. Therefore, he or she needs effective tools for validation to answer what specifically has happened and potentially why. In addition, if the load is brought back online, these tools should help address the risk (e.g., fire, loss of control, etc.).

2.3.2 Display Redundancy.

If a control is to be used by the flight crew for a critical or essential function, the interface must have a high level of reliability to satisfy the aircraft safety analysis. Single-point failures, where a single-item failure causes loss of control/function for multiple devices, must be extremely improbable. For microprocessor-controlled systems, this is generally achieved with dual or even triple redundancy. The displays produced for this program were single-redundant, but were designed to allow for redundancy when used in critical or essential applications.

2.3.3 Maintenance Interface Considerations.

The display system is the maintenance crew's primary interface to the EPDS. Through the displays, normal maintenance functions, such as the reset of in-flight reset-restricted breakers and the lockout of breakers for maintenance are performed. The displays are also the primary method of updating system software and configuration tables, and validating that the updates are correctly installed. Data recorded during the flight, which is useful for troubleshooting and prognostics, can also be viewed and downloaded through the display system. The maintenance functions are not useful in flight, and must be locked out to prevent access to them when the aircraft is operating in air. The preferred method of doing this is the implementation of a weight on wheels (WOW) input to the displays, which allows access to maintenance functions only when the landing gear is down and the aircraft weight is resting on the gear. The WOW is commonly used throughout the aircraft avionics system for a similar purpose. An additional lockout, key switch, or combination can also be employed to prevent unauthorized access to the maintenance functions.

The display system has the ability to store and present data gathered through current and voltage monitoring, an initial, simplified version of which is shown in figure 36. Several key diagnostics are possible using this raw data:

- Assessment of nuisance trip probability
- Assessment of fault type—particularly hard fault versus soft fault (i.e., arc fault)
- Assessment of a load fault versus wire fault
- Assessment of load currents outside of maximum specified levels
- Diagnostics of multiple fault events

In all cases, these assessments are derived by postprocessing the recorded events. The solid-state breakers perform their immediate circuit protection functions, as programmed, along with automatic load shedding. However, there may be cases where an impending failure is detected and the pilot must take immediate action. These are the only events annunciated to the flight crew.

Data recorded by the EPDS may be periodically downloaded and stored by the aircraft manufacturer to be used for the analysis of trends or acquired digitally and combined with other data stored in a central maintenance computer during flight. Which option is used, if any, is determined by certification requirements and the maintenance philosophy defined for a particular aircraft.

From the maintenance crew's perspective, the value of advanced reporting methods supports three objectives:

1. Timely resolution of immediate problems (thereby minimizing aircraft downtime)

2. Preventative maintenance

3. Reduced maintenance by improving aircraft reliability

2.3.4 Development of the GUI.

The GUI was developed on a touchscreen computer running the Windows XP® operating system and was designed to be usable with a mouse, joystick, trackball, or any other pointing device. It can be implemented on other operating systems for flight-critical applications. The GUI can be run on a dedicated display device or as a function of the cockpit avionics display panels.

Initial GUI designs focused on emulating the look of a traditional CB panel. The display shown in figure 36 was judged by the consulted engineers and pilots as being too small for easy reading and too confusing.

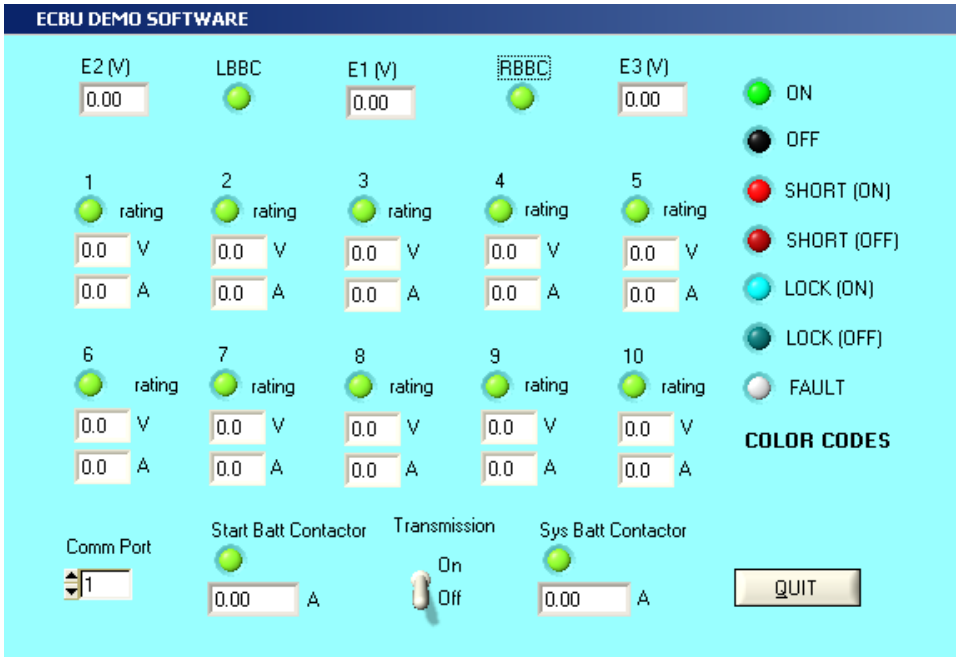

Figure 36. Initial Format of GUI Display

It had been predicted that larger status indications and the removal of the current and voltage information would make for a panel that was easier for pilots to quickly scan for problems. The second attempt (see figure 37) used larger ECB status indications, but was still not as user-friendly as had been expected.

Figure 37. Second GUI Display

The use of color by itself as a status indication was judged as unacceptable by the reviewers; a graphical symbol along with color was deemed better at annunciating status. The screen shown in figure 38 was developed to address this issue.

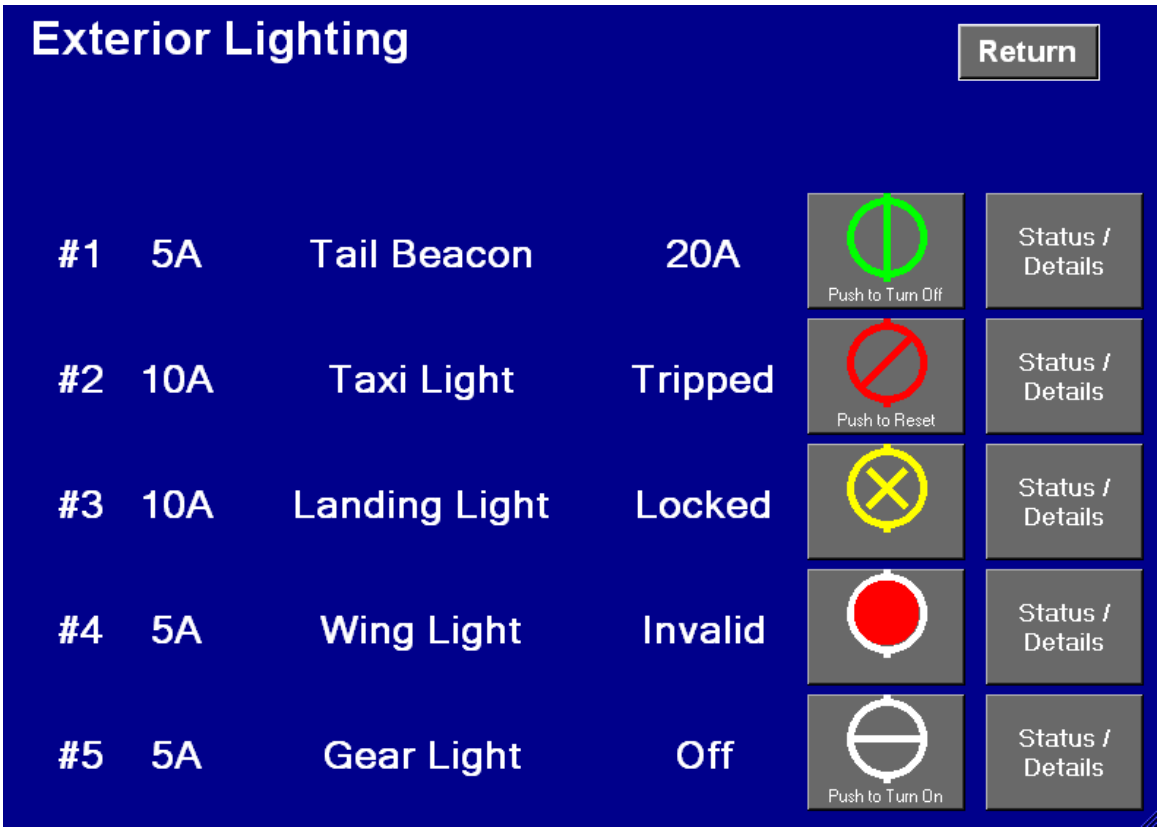

Figure 38. Third GUI Display

An introductory screen letting the operator choose a manageable set of CBs, grouped by function, was also created (see figure 39).

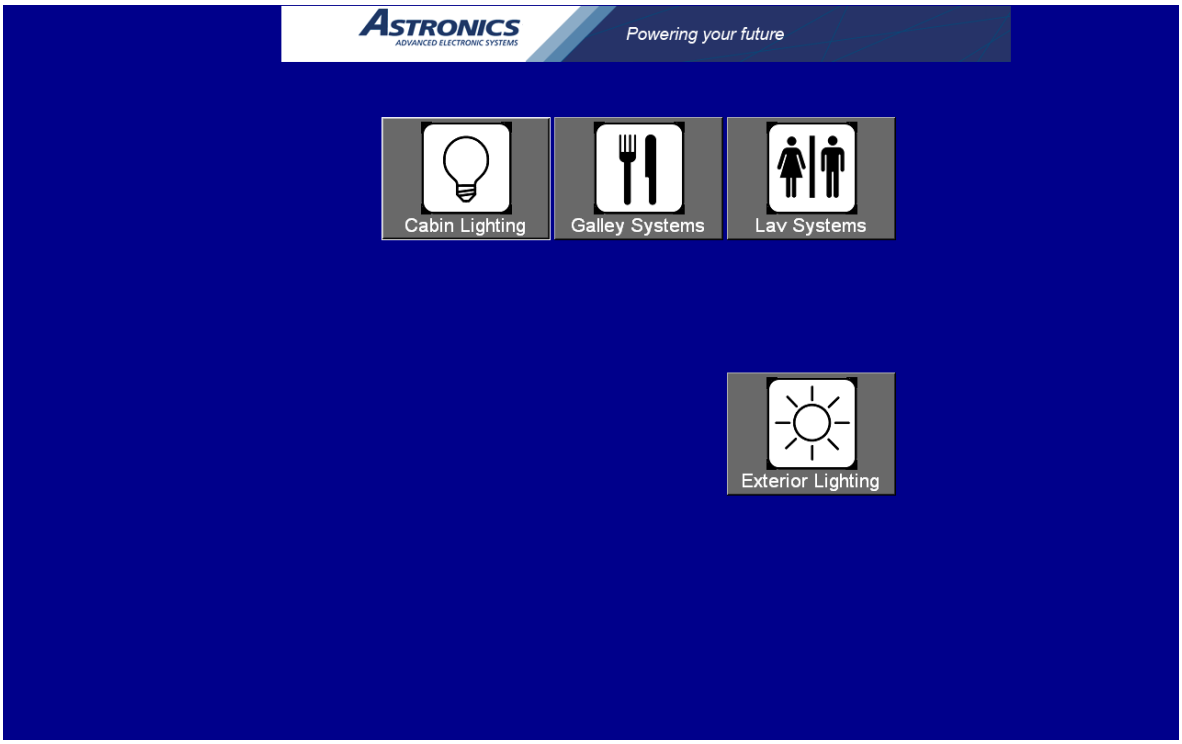

Figure 39. Home Screen Concept

The symbology selected for the GUI was based on previous work done on avionics displays and borrows heavily from symbols used for industrial process control, as shown in figure 40.

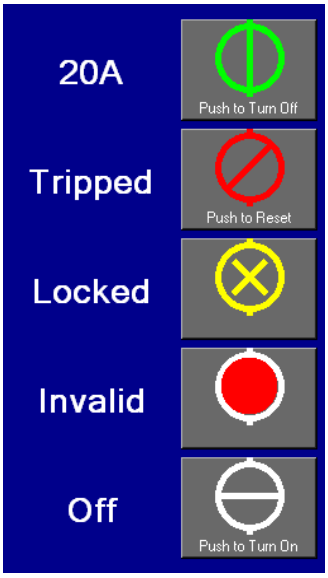

Figure 40. The ECB Symbology

2.3.5 Circuit Status Indication on the GUI.

Pressing the "Status/Details" button on the display screen brings up a screen for each ECBU. This screen (see figure 41) shows more detailed CB status, such as the instantaneous current, the current as averaged from the last activation, the maximum current from the last activation, the instantaneous bus voltage, and the number of trips (both lifetime and with a resettable counter).

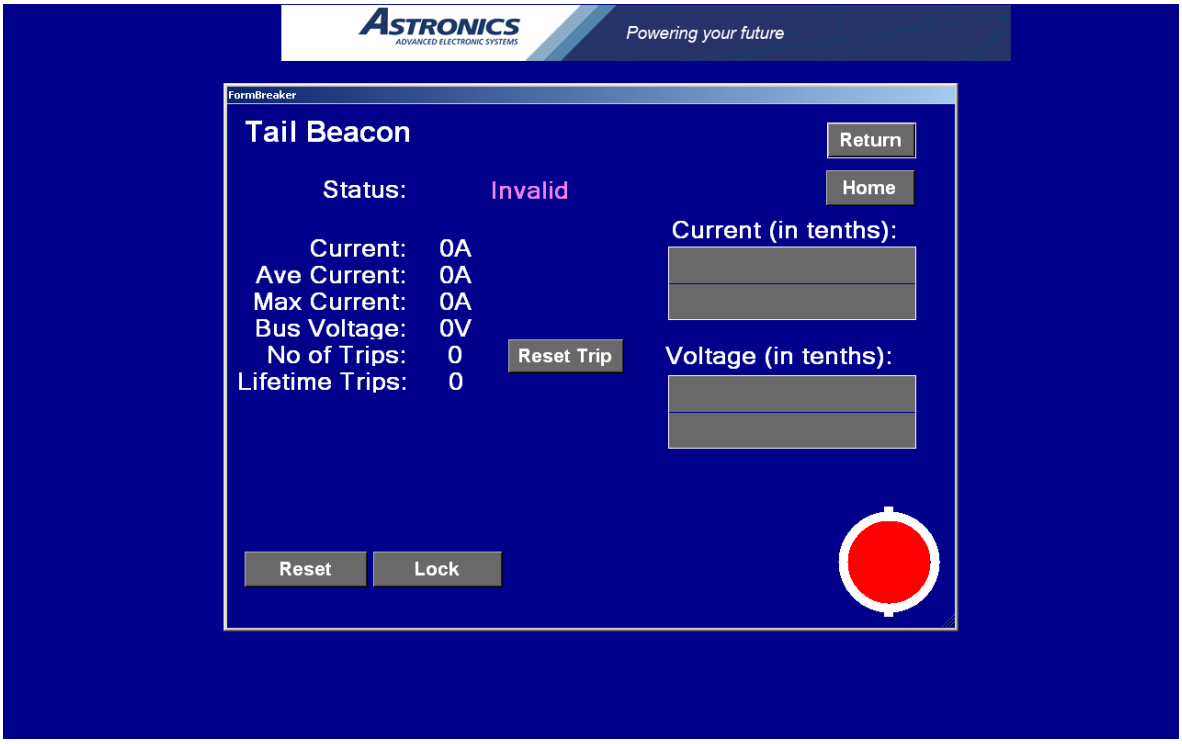

Figure 41. The GUI Prognostics

Output voltage and current real time strip charts are also provided, with a fixed time base. All of the information displayed can also be recorded in a data file for ground personnel to analyze. The status of the CB is displayed on a separate line. Table 2 shows what each status indication reveals to the operator.

Table 2. The ECB Status Definition

Status Display	Meaning
ON	The load is on
OFF	The load is off
TRIP OVERLOAD	The ECB has tripped because of an overload
ARC FAULT	The ECB has tripped because of a parallel arc fault
INVALID	The ECB is not communicating

2.3.6 Final GUI Implementation.

Experience gained during the development of the previous GUI revisions, combined with consultations with avionics display manufacturers and the human factors experts employed by aircraft manufacturers, resulted in the final GUI implementation. This GUI was used for the EPDS built for use in the FAA 737 aircraft. The top-level GUI panel (see figure 42) displays the synoptic page of a generic EPDS. The labels on the sides indicate the assigned function of the associated bezel buttons. The left side demonstrates load-shedding capability by simulating generator and battery connections. Messages displayed at the top are acknowledged with the "CAS ACK" button. The right side allows the user to select ECBs by status, system, and ECBU.

Figures 43 through 45 show three ways of locating specific CBs, as selected from the buttons shown on the right side of the screen in figure 42.

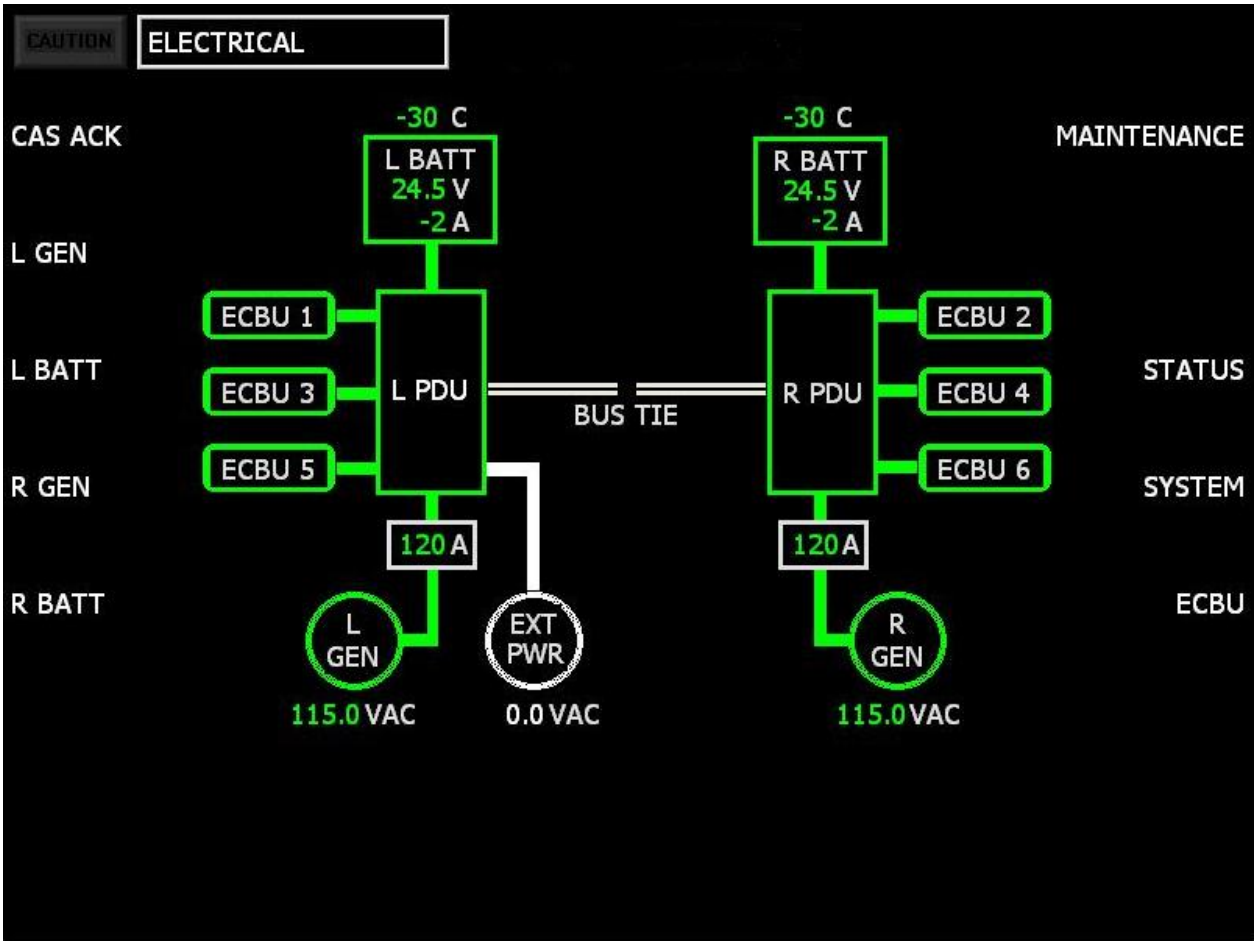

CAS ACK = Crew alerting system acknowledge

Figure 42. Top-Level GUI Panel

The screen shown in figure 43 allows access to the CBs associated with a particular system.

Figure 43. System Select Panel

The screen shown in figure 44 allows access to all CBs having a particular status (e.g., the operator can see all tripped CBs on the aircraft), regardless of their system grouping.

Figure 44. Status Select Panel

The screen shown in figure 45 is useful mostly for maintenance personnel and groups the CBs by ECBU (physical location).

Figure 45. The ECBU Select Panel

The ECB panel (see figure 46), accessed from any of the ECB group select screens shown above (figures 43 through 45) provides for the control and status of individual ECBs. The particular ECBs shown depend on the particular group selected. In this case, ECBs associated with ECBU1 were chosen for display. The user can scroll through pages of ECBs using the arrow buttons and then select the individual ECB with the buttons on the left side of the screen. When selected, the ECB is highlighted and individual status is displayed at the bottom. A graph is provided to display real time current loading of the selected ECB.

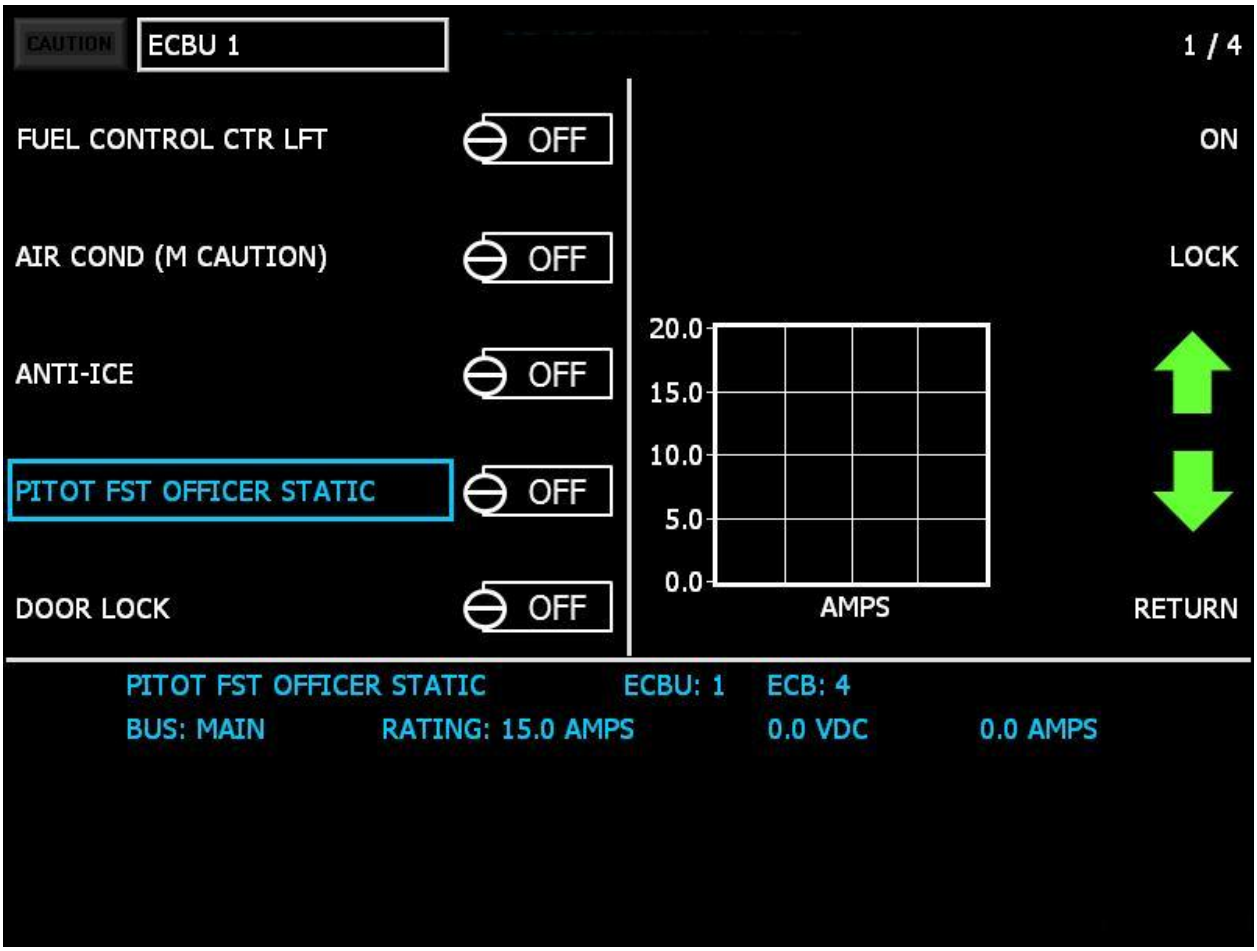

Figure 46. The ECB Panel

The status of the blue-highlighted CB, along with available controls (dependent on ECB state, and "on" mode, in-flight, or maintenance) is shown on the right side of the screen. Bezel buttons allow navigation and control of the highlighted CB.

2.3.7 The Smart Panel.

It is anticipated that some future aircraft configurations will make use of a more simplified approach to controlling solid-state CBs than the touch-panel display concept. Given the need for fleet standardization and the requirements for minimum pilot retraining, a smart panel concept would be the best option. Essentially, this switch panel would replace the cockpit area formally

populated by thermal CBs, but, in this case, the proposed panel provides switching and status function only. In some cases, the ECBU module is located remotely from the cockpit.

The smart panel (see figure 47) presents a similar look and feel to the thermal CB panel to achieve a reasonable level of commonality, especially regarding spatial layout. A pilot would know by feel which CB he is controlling; however, there would be some significant differences. Most notably, CB status would be provided via lighted color change illumination, rather than by the traditional popout feature of thermal CBs. Figure 48 shows two prototype concepts that make use of a light-emitting diode (LED) backlit button configuration. In theory, four baseline colors (green, red, white, and amber) would be used to provide system status. Green would indicate that the circuit under load is operating normally. This includes the load, the wiring, the ECB, and the smart panel. Red would provide status that an ECB has changed state to a tripped condition and has open circuited the load. Amber is reserved for the infrequent condition of a failure of a particular ECB. White would be intended to provide a lockout configuration status.

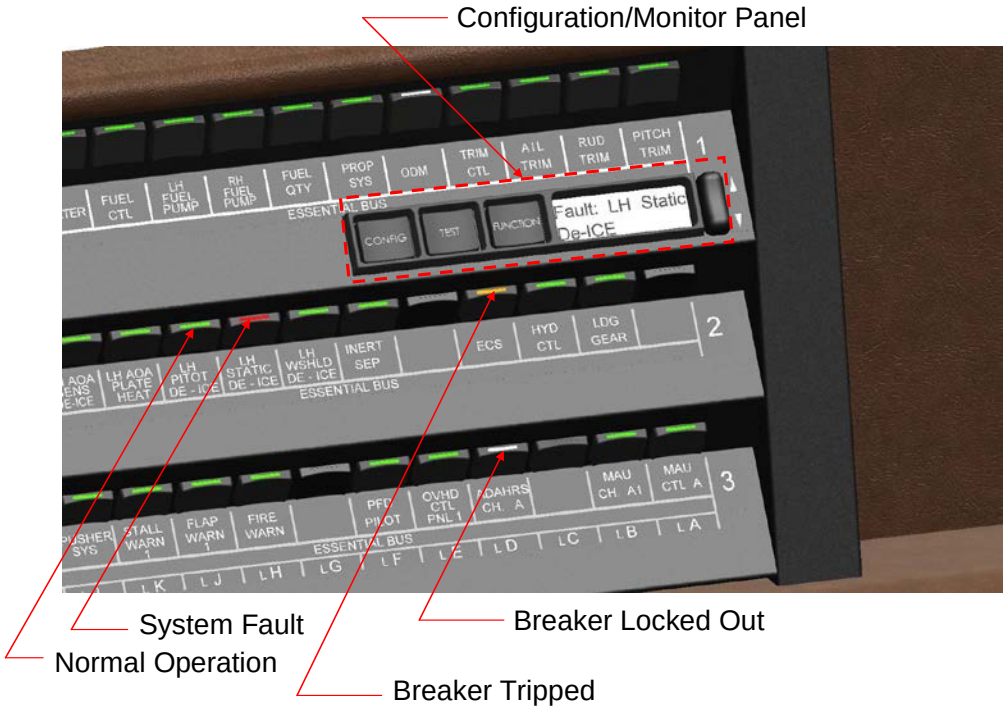

Figure 47. Smart Panel Concept

It is well understood that Code of Federal Regulations parts 23 and 25 require that lighted status conform to requirements that ensure sunlight readability and minimize potential for reflections in the pilots' windows. In addition, requirements for tactile feel, reach, and off-angle viewing must be adhered to. All such conditions affect the design and placement of smart panel switches.

Configuration management is another factor to be considered with the design of the smart panel. The smart panel concept, shown in figure 47, provides three additional buttons ("Test," "Configuration," and "Function"). The "Test" button allows the pilot or maintenance crew to perform a quick system health check.

This entails the following steps:

- Health test of the ECB
- Continuity test
- Smart panel health test (i.e., all LEDs are functional, Comlink established, etc.)

Of course, this quick system health check could also be integrated as a system-level built-in test; however, since the design philosophy of the cockpit is likely to follow the quiet, dark cockpit theme, it may be beneficial to give the pilot this manual function.

The "Configuration" button would allow the maintenance crew/flight operations group to configure a particular aircraft, in terms of certain loads intentionally being made inoperable. For example, if an aircraft has a system problem with the in-flight entertainment equipment, it may be necessary to open (lockout) those respective circuits. This could be done by pressing the "Configuration" button concurrently with the respective button controlling that particular ECB. The ECB button would then show a white status annunciation when the "Configuration" button is pressed. This two-handed operation would eliminate the possibility of an unintentional state change. As an additional safeguard, entering an alphanumeric code may be necessary to ensure proper authorization for the configuration change. This is where the "Function" button would be of benefit. The "Function" button would allow certain ECB buttons to have the secondary function of an alphanumeric. This is readily possible since the Smart Panel has resident microprocessor control.

As a feature growth provision, an integrated LCD display may be provided in the smart panel. This simple two-line display would allow more detailed fault, prognostics, and system health status to be provided, which may include:

- Distance to fault diagnostic
- Fault type status: ground fault interrupter (GFI), parallel, series
- Collateral trip event (i.e., system fault interrelationships)
- Load shedding status
- Nuisance trip probability

2.3.8 Development of the Smart Panel.

The smart panel was designed to be very flexible in its physical implementation so that it can fit into areas of different sizes in an aircraft. Figure 48 shows two different physical implementations of the smart panel. The smart panel control electronics were designed around the philosophy that no single failure could affect more than one load. This required a redundant processor system.

Figure 48. Smart Panel Prototype

Figure 49 presents the topology of the smart panel. The microprocessor monitors the switch inputs and sends a digital signal on the data bus to the appropriate ECBU(s) when a button press occurs. Special debounce algorithms in the processor prevent multiple operations of the switch under high vibration or turbulent conditions. Data from the ECBU(s) are then received on the data bus and are used to signal status on the appropriate indicator. This system can support any number of switches and indicators. Dual microprocessors and power supplies eliminate the possibility of single-point failures, but a single-channel panel can also be employed in noncritical applications.

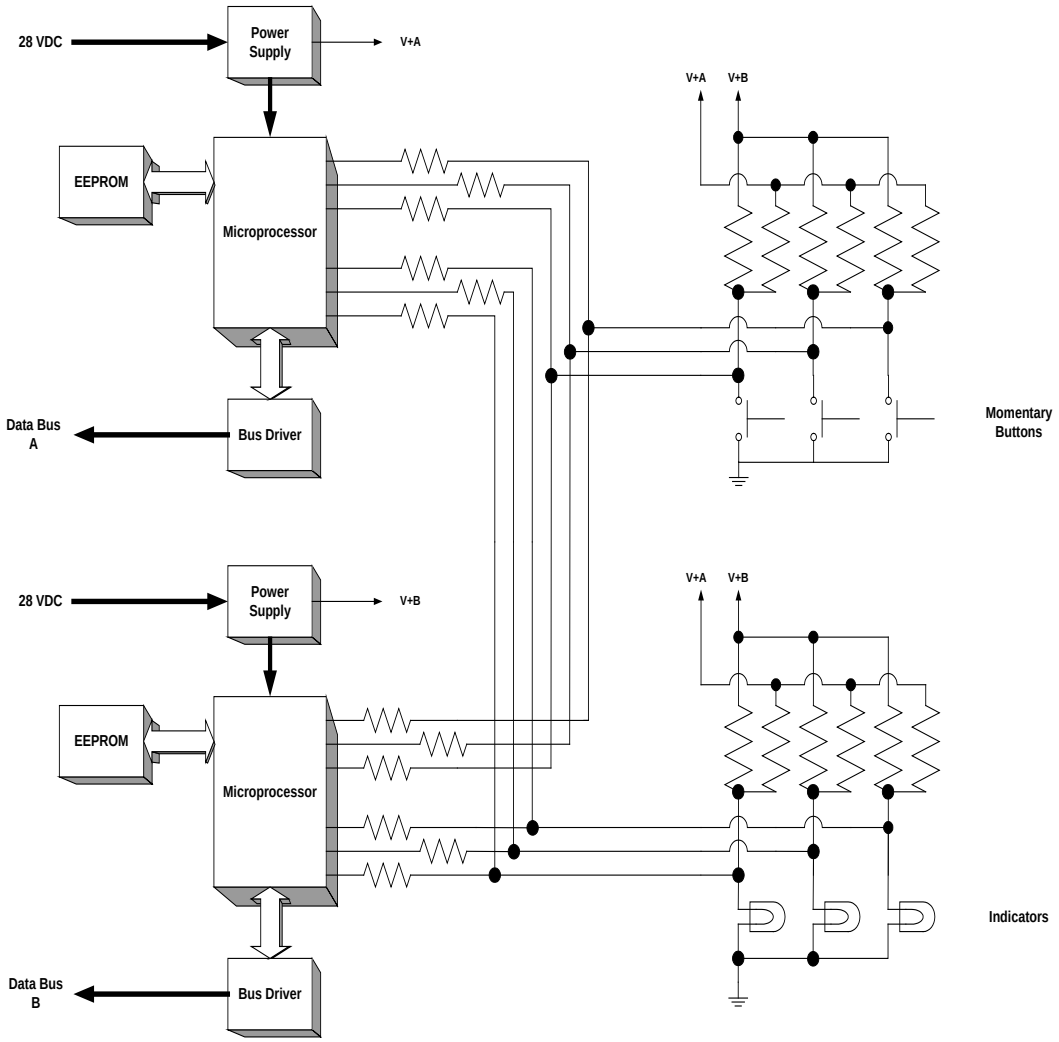

Figure 49. Smart Panel Topology

Figure 50 shows a smart panel interfaced with an EPDS.

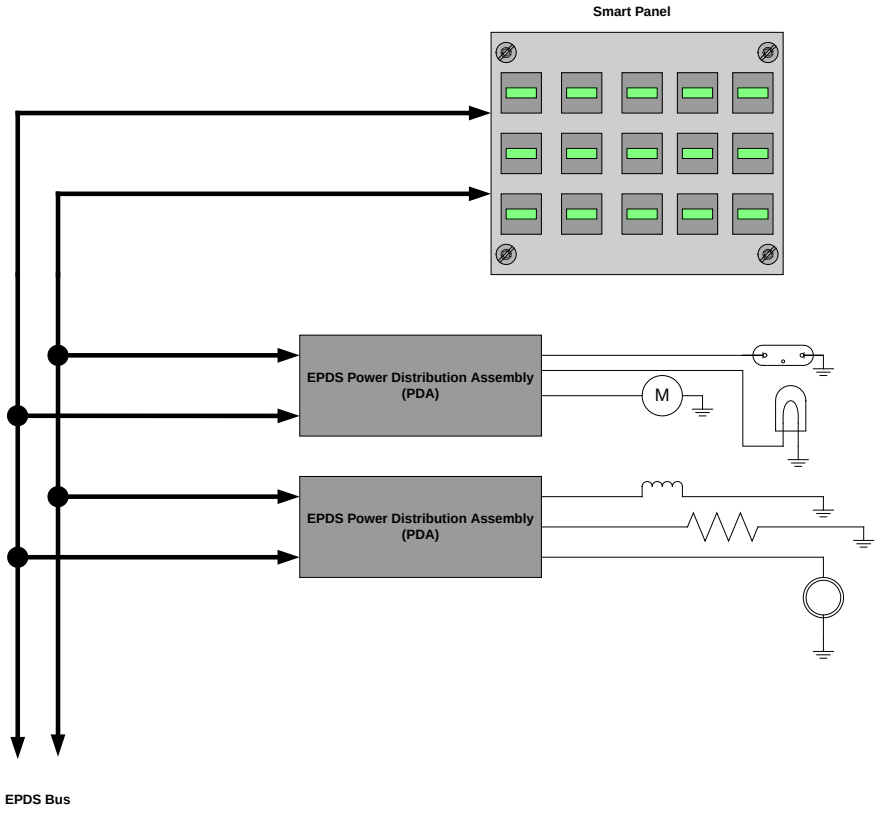

Figure 50. Smart Panel Connected to ECBUs

2.3.9 Smart Panel Switch Technology.

There are several types of discrete switches that can be used in the panel assemblies, including individual dome switches mounted on glass/epoxy boards, membrane switches, pushbutton annunciators, toggle switches, pushbutton switches, rotary switches, and potentiometers. Switches with built-in annunciation are shown in figure 51.

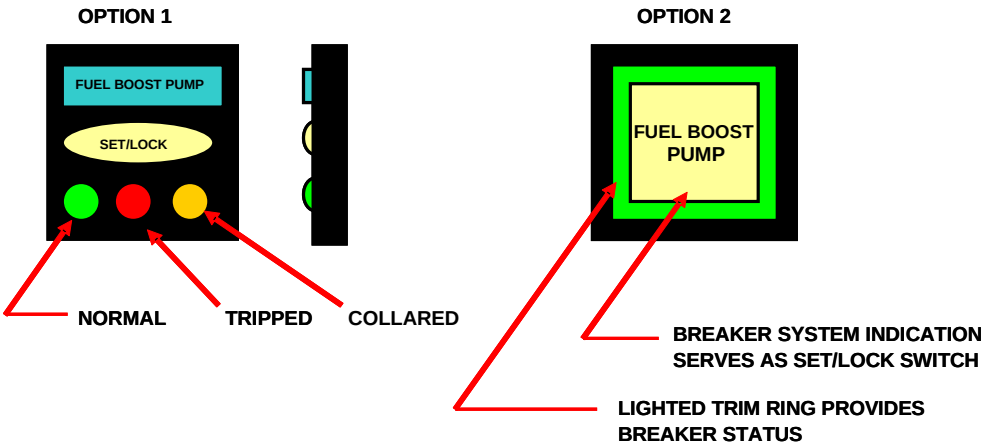

Figure 51. Switches With Status Annunciation

2.3.10 Smart Panel Status Indications.

The smart panel can be designed and programmed for different combinations of colors, blinking indications, or alphanumeric displays (see figure 52).

Color	State
GREEN	On
	Off
RED	Tripped
WHITE	Collared
AMBER	Breaker Fault

Figure 52. Status Annunciations

2.3.11 Smart Panel With Lighted Buttons.

An additional advantage to this smart panel design is that the system can be customized to fit the powering needs of any aircraft. An extensive trade study conducted for a Sikorsky S-76 helicopter prompted the decision to incorporate this design feature. Various ECBUs are integrated into the smart panel (see figure 53), each with different CB quantities, along with a control module. Thus, by using a plug-and-play approach, up to 16 modular ECBUs can be used jointly to create a customized EPDS for any given aircraft.

Figure 53. Smart Panel With Lighted Buttons

The retrofit potential for a compact EPDS (designed to fit in the local area previously occupied by the thermal CB panel) would provide all the benefits of advanced circuit protection, active control, and future prognostics, in a manner that requires minimum rework to the aircraft. This may be an alternative to fully distributed EPDS architectures that require significant aircraft rewiring.

2.3.12 Smart Panel and GUI Combination Unit.

After initial installation and testing onboard the FAA B-737 test bed, it was determined that a smart panel display with expanded capability was required. A Flight Display Systems (FDS) monitor with 10 bezel buttons was selected as an additional user interface and added to the unit (see figure 54). A Stealth mini PC drives the display and continuously monitors for bezel button selections. The buttons are soft keys and their function is based on the selected GUI panel. The smart panel is wired so that all ECBs may be controlled by either the original pull buttons or the GUI. The final GUI software (see section 2.3.6) was used for this display.

Figure 54. Smart Panel With Lighted Buttons and Monitor/Bezel Button Controller

2.3.13 Prognostics.

Prognostics is the task of collecting information, in this case from the EPDS, and using the data to predict the remaining life of a load or the time to a necessary overhaul. Current trending data, corrected for normal changes in current due to proper load operation, are the most valuable data that the EPDS can collect. Operating time is also very important when predicting the remaining useful life of loads that have a wearout phenomenon associated with them, such as lighting or bearings. It may be possible to assess bearing health using high-speed current recording. The key to prognostics integration with the EPDS and display system is to provide only the information that the pilot needs to fly the airplane. More detailed maintenance indications can be obtained from the displays by connecting the display into a laptop computer and downloading the information when the aircraft is on the ground.

In-air analysis of information by the EPDS should also be strictly limited to what is needed by the flight crew during the flight, with prognostics analysis left to ground-based computers.

2.3.13.1 Using Load Current to Determine Load Status.

The load current is a very important indication of the status of a load. The following sections present some information on di fferent types of loads and the information contained in the current.

2.3.13.1.1 Incandescent Lamp Loads.

The health of an incandescent load can be determined by monitoring the load current. An incandescent lamp has a current waveform that looks much like those shown in figure 55.

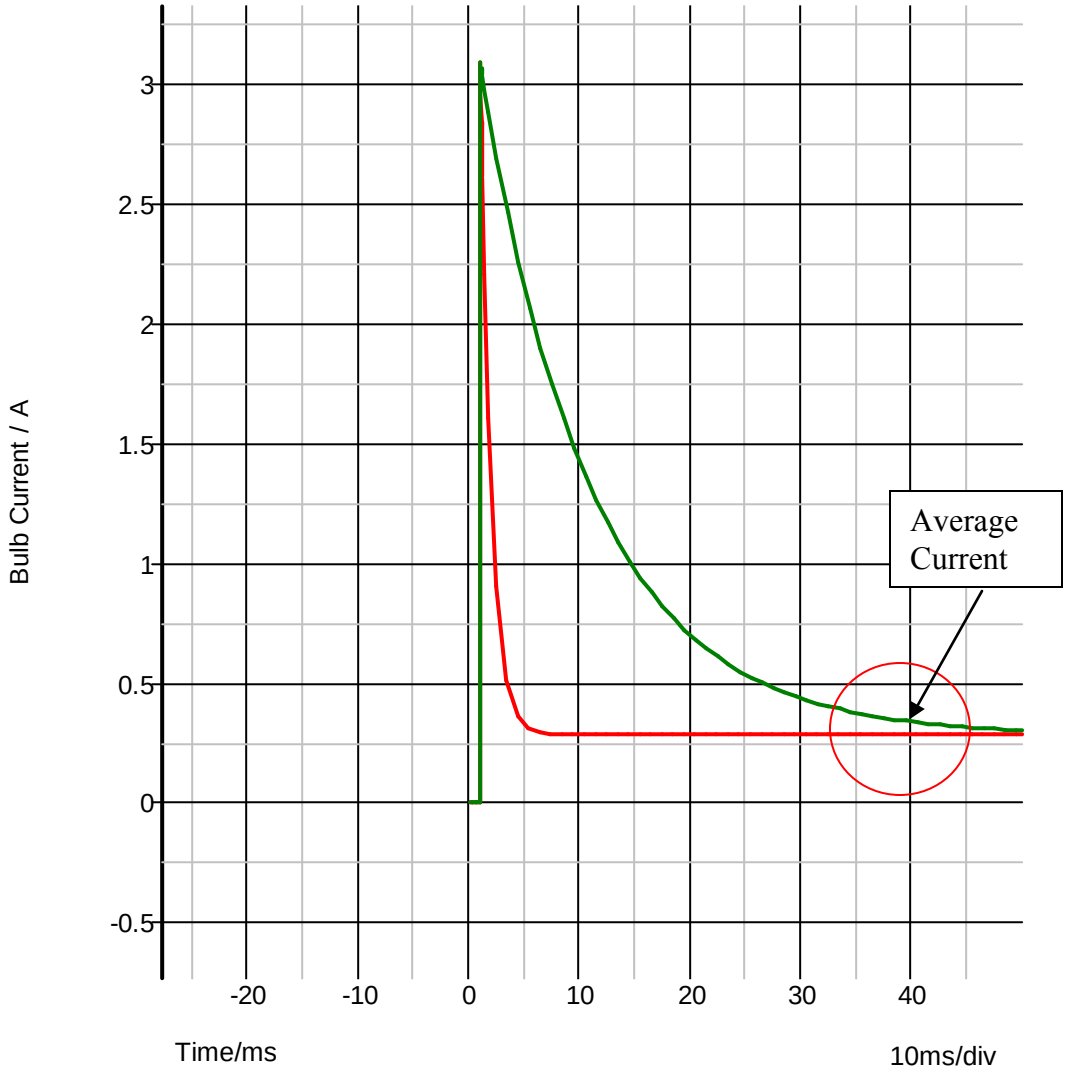

Figure 55. Incandescent Load (Green Trace)

The inrush spike varies in magnitude and duration with the filament type, but the wave shape is identical. For determination of the health of the lamp, monitoring the average current is sufficient. If the average load current goes above 120% of the nominal lamp current rating or below 80% of the nominal lamp current rating, the lamp is deemed defective.

2.3.13.1.2 Fans, Blowers, and Nonpressurized Fluid Pumps.

These types of loads use a motor to turn an impeller, which moves a gas or a liquid. The primary characteristic of this load is that the starting torque is near zero, and the torque requirement increases with the speed. A piston-type pump that operates into a pressure has a totally different characteristic.

Current consumed by fans, blowers, and nonpressurized fluid pumps is proportional to the amount of work being done by the motor, so monitoring the current is a way to determine how much air or fluid is being moved by the device.

Using a DC brush-type blower as an example, figures 56 through 58 show that, as the airflow becomes restricted, the current consumed decreases as less air is moved. The initial no-load current is slightly higher than the 10% restriction current because of this effect.

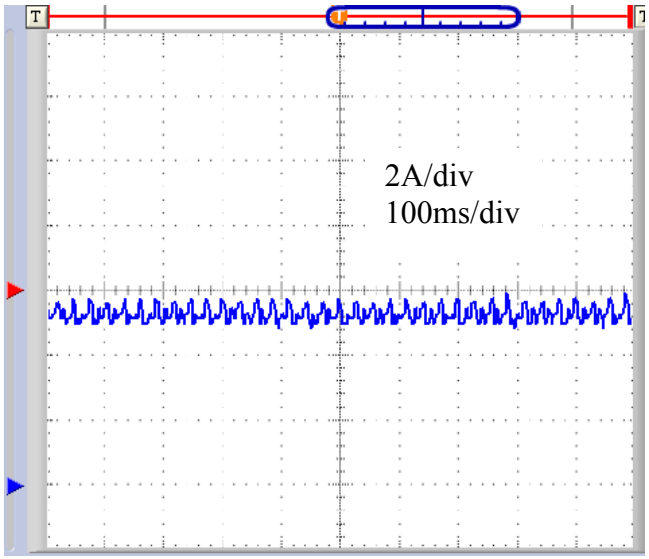

Figure 56. Blower With 10% Restriction

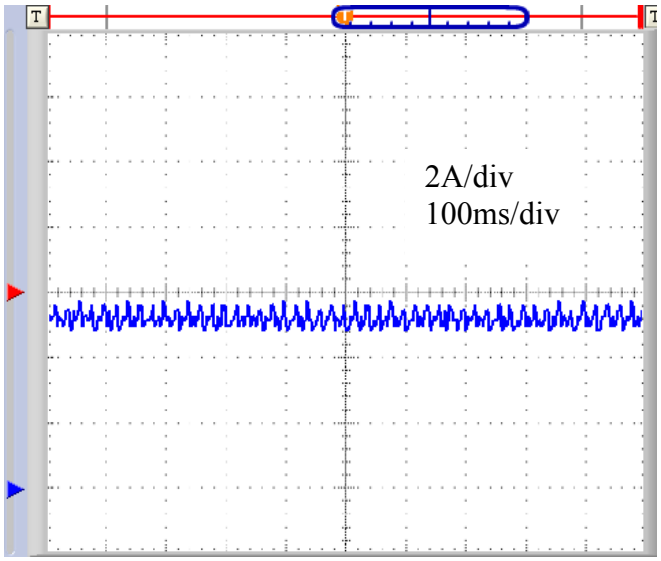

Figure 57. Blower With 50% Restriction

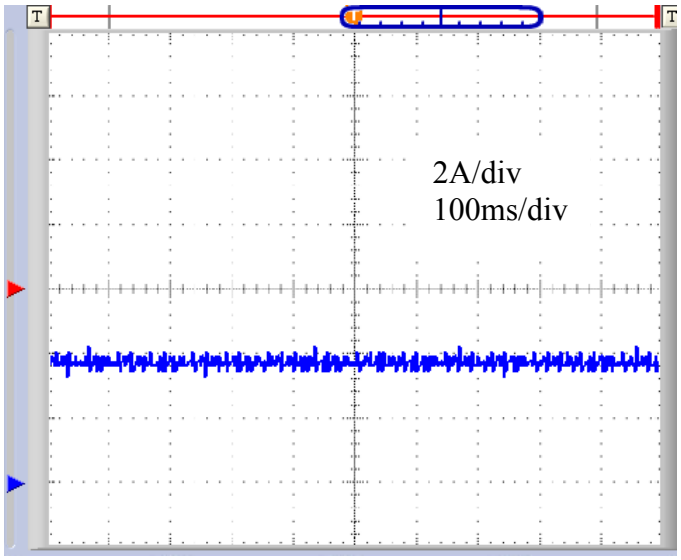

Figure 58. Blower With 100% Restriction

Monitoring the load current consumed by a fan, blower, or pump is an excellent way to determine if the device needs to be serviced. If the average current decreases over time, the air-moving capacity is decreasing, possibly because of blockages. If the average current increases over time, as shown in figure 59, the impeller has been damaged or the bearings need to be lubricated.

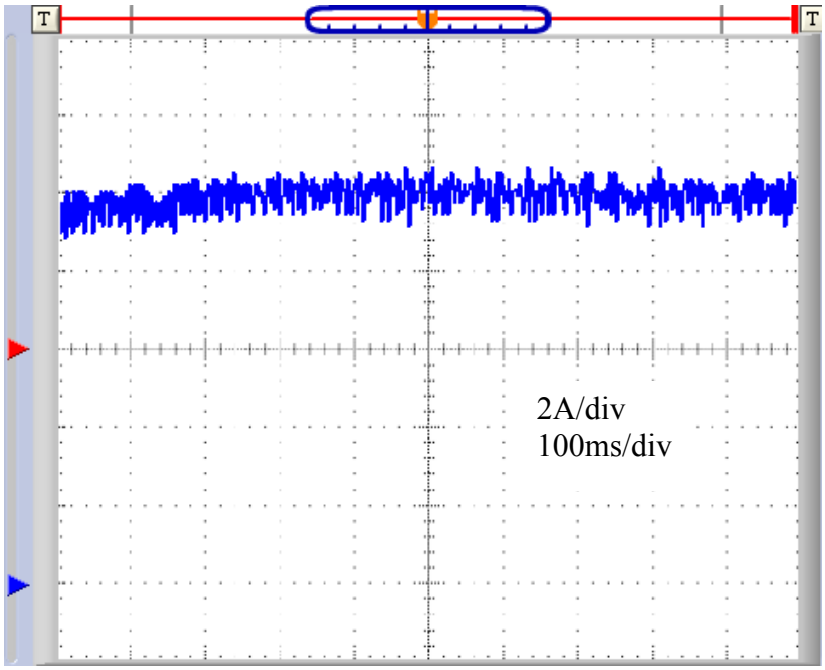

Figure 59. Blower With Friction Applied to Impeller

2.3.14 Results, Interpretation, and Next Steps.

The graphical display of CB status is relatively simple to achieve, but it is difficult to gain a consensus among users regarding how to display the details of the display graphics and organization of the graphics into pages. The final displays generated for the flat-panel display on the 737 test installation were judged to be acceptable by all evaluators, but they all had different opinions for improving the organization of the data. The speed of GUI response to changes in CB status and the display of changes in load current were issues throughout the development. The Windows XP® operating system was chosen for the GUI tests, and the overhead of the operating system caused delays between the display and the status of the actual power system state. The programmers were able to minimize the delays to some extent, but the final GUI has a perceptible response lag. The smart panel prototype used a dedicated operating system to control the ECBs and status display was perceived as instantaneous. To create a flightworthy GUI, the overhead of the operating system must be minimized—most likely by creating an operating system specifically designed for the task.

The GUI is a useful maintenance tool, allowing for observation of the status of each load in a power system without bringing additional equipment on board. Prognostics of a simple nature (current consumption of the load) can be implemented for real time monitoring by the flight or maintenance crews. More complex prognostics (current versus time, waveform anomalies, etc.) can be done on the ground based on current recordings made by the GUI while in flight.

2.4 MATRIX SWITCHING.

2.4.1 Introduction.

A system was developed that has the ability to safely switch power from one conductor to another and reroute power based on the detection of wiring damage. The power rerouting logic can automatically respond to the detection of arc faults, bolted faults, high contact resistances, intermittent shorts, or damage due to loose terminals in the wiring. The system has the capability to reroute power around the damaged electrical wiring interconnection system to maintain safe flight operations, especially on critical systems.

2.4.2 Matrix-Switching Concept.

The concept of matrix switching is to supply a PDU with two or more power inputs, power from different sources and with differently routed wiring, and allow the PDU to select between them based on power quality criteria (see figure 60). This prevents loss of power to critical loads in the event of bus wiring or source power faults. Bad wiring can be disconnected from the power system before major damage or electrical fires can occur, and the faulty wire can be earmarked for repair. Because the majority of the wires in an aircraft that uses EPDUs are bus feeds to PDUs, this provides the ability to reroute 80% to 90% of the wiring in an aircraft without loss of a single load. Another benefit of this system is the ability to switch loads from one bus to another, either automatically or under pilot control, to help balance the loading of the power sources. Conventional distribution systems cannot do this and the result is that a bus fault in a conventional system can prevent multiple aircraft loads from receiving power, which is a critical emergency. The matrix switching of bus feeders will result in a much safer aircraft, with no single bus wire fault or source fault able to cause a power failure in any aircraft load.

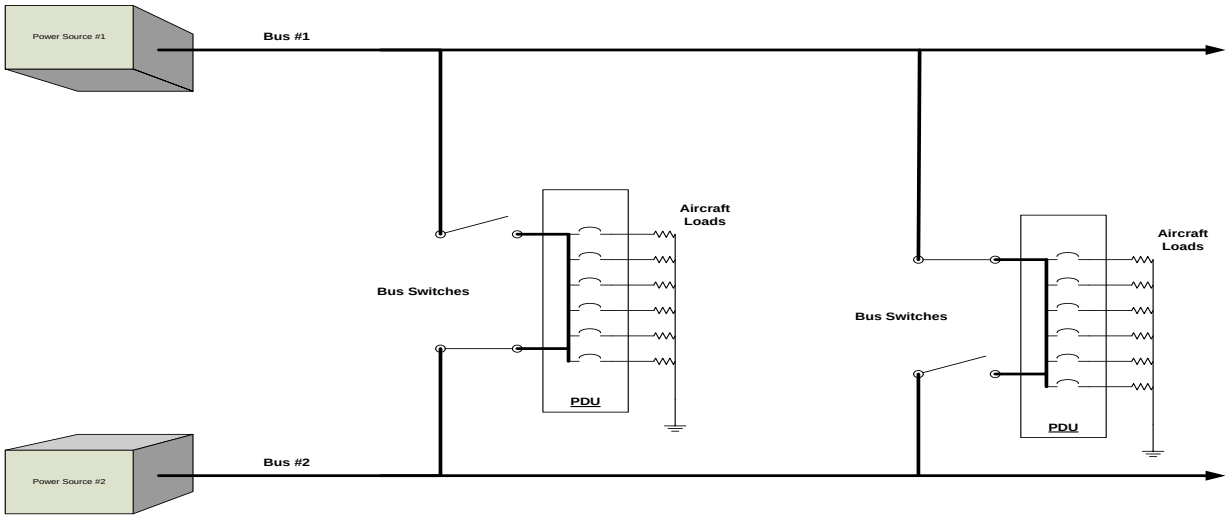

Figure 60. Matrix-Switching Concept

2.4.3 Drawbacks of Conventional Power Distribution Architectures.

Figure 61 shows an example of a conventional DC small aircraft EPDS. A short in the wiring on the red bus or the blue bus would cause the loss of all of the loads connected to that bus. The conventional EPDS places 44 critical loads in a PDU that has an alternate feed from an emergency power supply (a battery and charger), but the majority of the loads would be unpowered in the event of a bus fault.

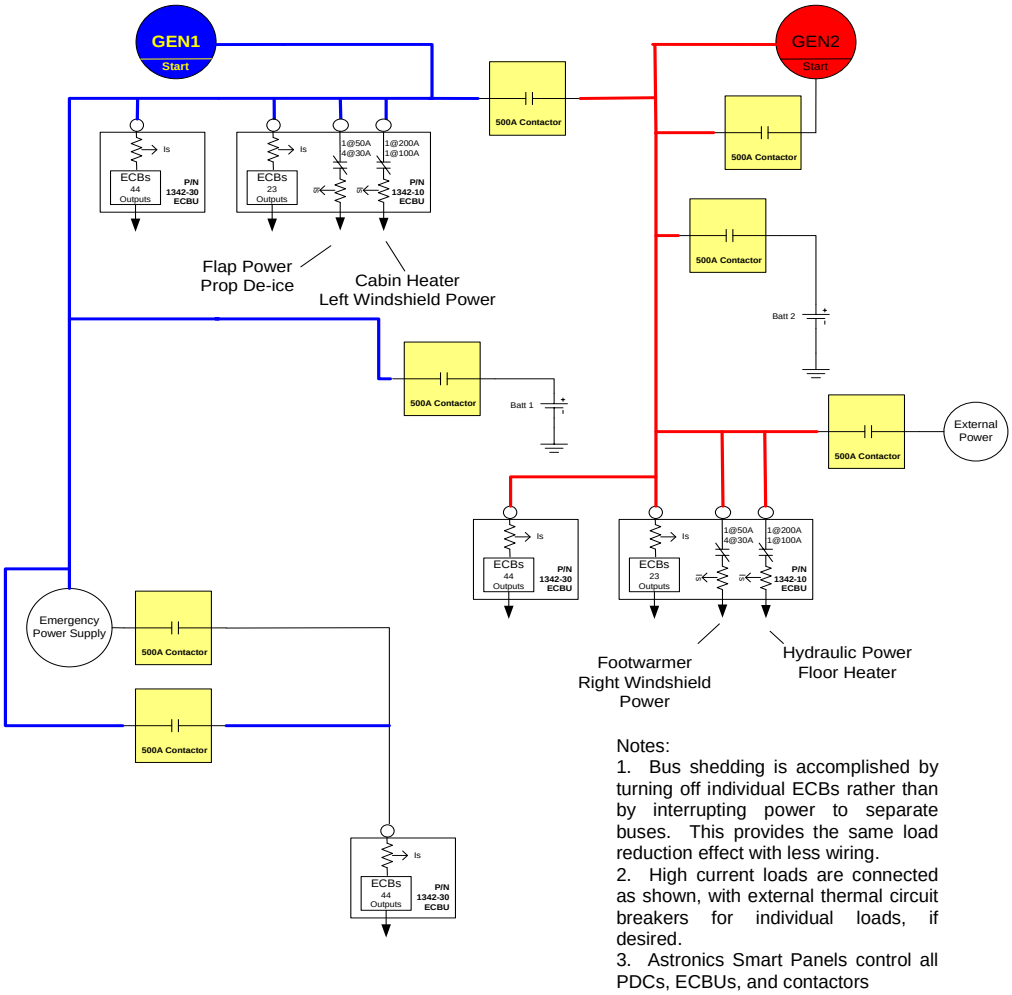

Figure 61. Typical Small Aircraft EPDS

2.4.4 Benefits of Matrix Switching.

Figure 62 shows how this system can be improved by using a matrix-switching concept so that all loads are powered in the event of a wire fault, and any possible wire fault can affect, at most, only one load.

More relays/contactors are used in this scheme, but the expensive and heavy emergency power supply is no longer needed. The contactors can be ECBs or conventional relays—the benefits are much the same. Each PDU controls its own relays so that it can select its own bus source.

A PDU's operating power can be supplied by either a dual supply derived, with appropriate isolation, from both buses, or from a separate feed. In the event of battery failure, the buses can be cross-connected to supply starting power to the engine.

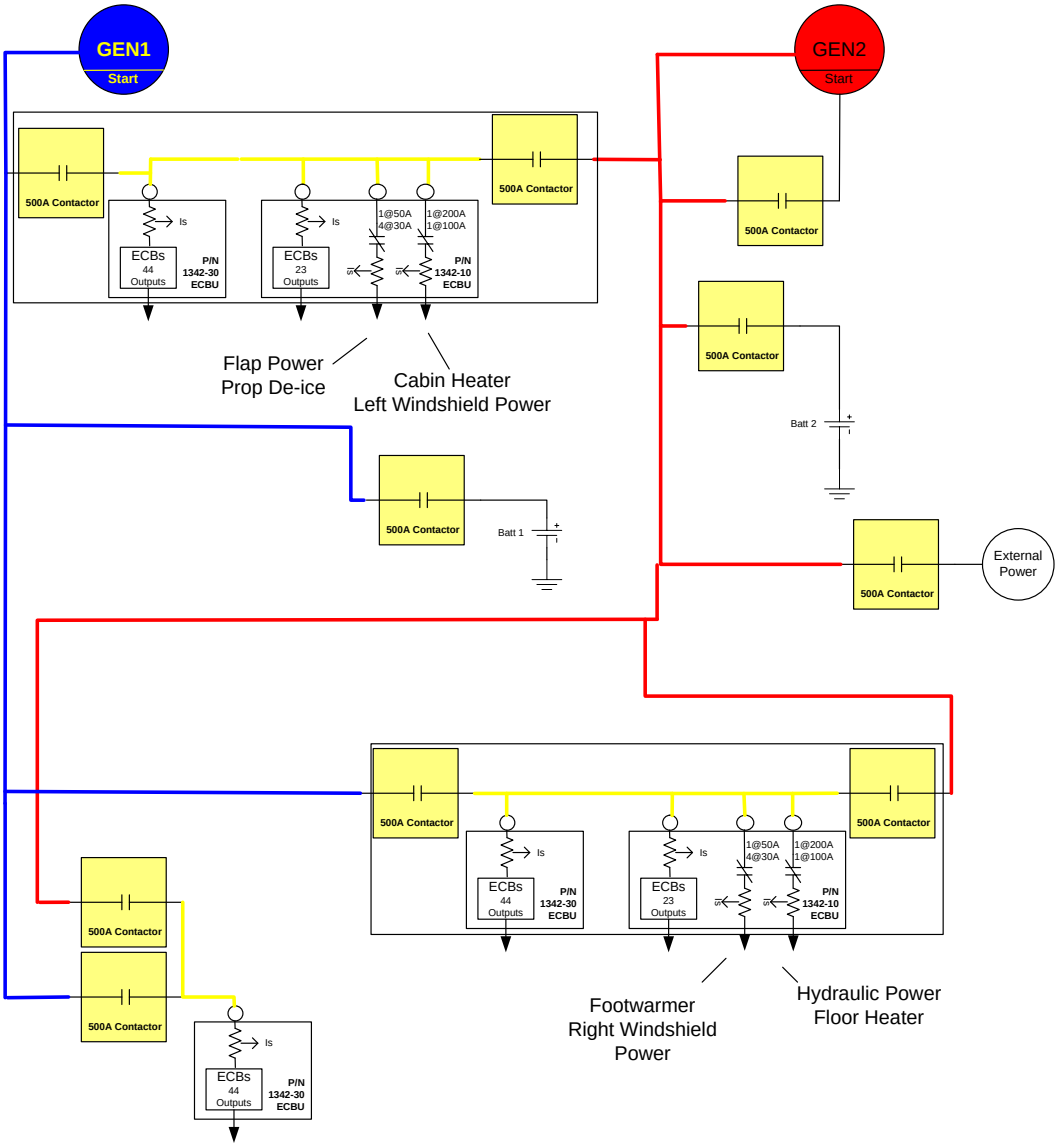

Figure 62. The EPDS Implementing Matrix Switching

2.4.5 Matrix-Switching Prototype.

The circuit shown in figure 63 was built to test the matrix-switching concept.

Two power buses, bus A and bus B, were created from a 28 VDC @ 400A supply by using two thermal CBs. A lternatively, two separate sources could be used, such as a battery and a generator, or two generators. The thermal CBs could also be replaced by two high-current ECBs or solid-state contactors.

The PDU controller card was programmed to read the input bus voltage and to switch from bus A to bus B whenever the voltage on A was below a programmable limit (a practical implementation of this design is shown in figure 64).

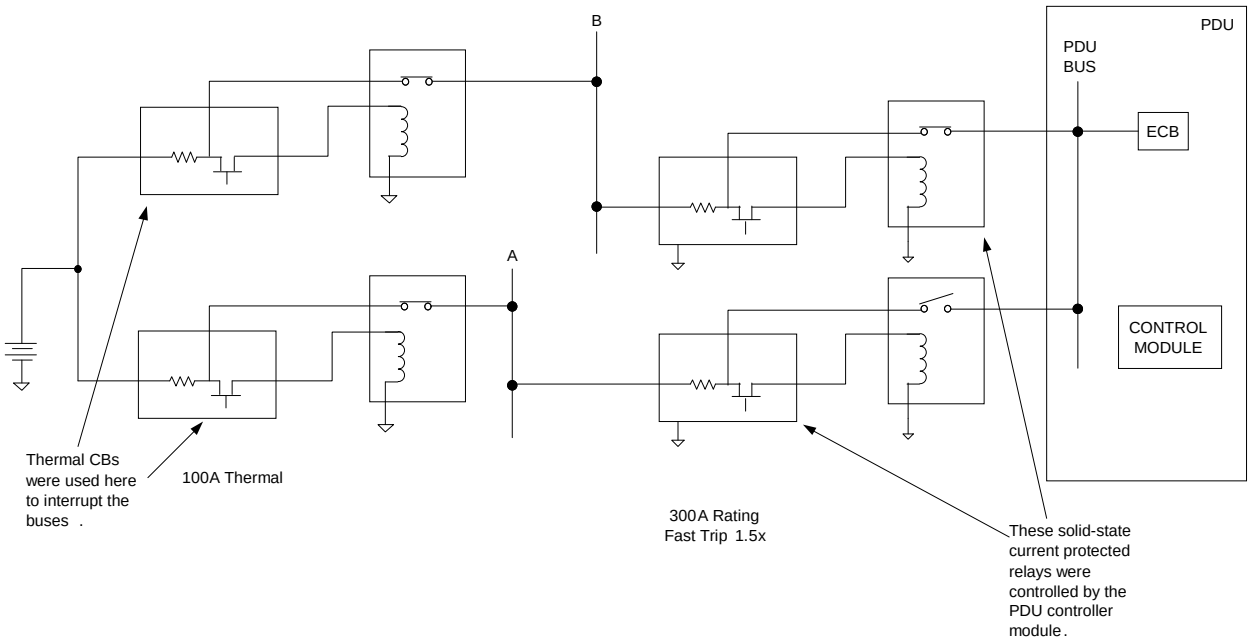

Figure 63. Matrix-Switching Setup Sketch

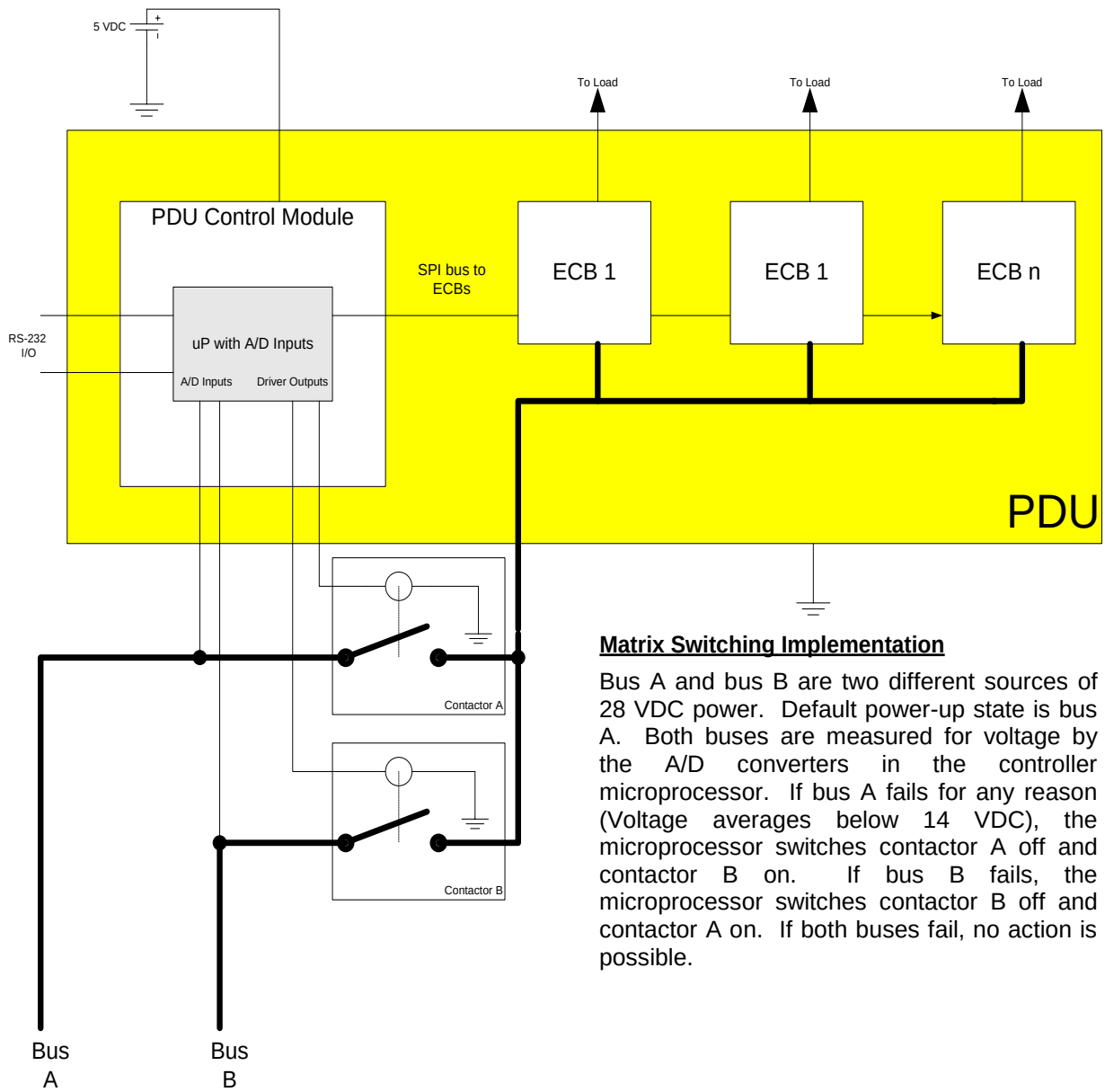

Matrix Switching Implementation

Bus A and bus B are two different sources of 28 VDC power. Default power-up state is bus A. Both buses are measured for voltage by the A/D converters in the controller microprocessor. If bus A fails for any reason (Voltage averages below 14 VDC), the microprocessor switches contactor A off and contactor B on. If bus B fails, the microprocessor switches contactor B off and contactor A on. If both buses fail, no action is possible.

Figure 64. Matrix-Switching Logic

This limit was set to 14V, but can be changed to any value between zero and 36V. The program in the PDU controller card was also initially designed to switch back to bus A whenever bus A was active (above the switching level selected), regardless of the status of bus B. The program should switch back to bus A if both buses were below the limit, and switch back to bus B if bus B became active and bus A stayed inactive. This switching algorithm was designed to ensure that PDU power was always available, but that preference was given to bus A, the default bus, so that load imbalances would not occur from temporary power dropouts on a bus (see figure 64).

2.4.5.1 Test Procedure and Results.

The circuit was tested by tripping each of the thermal CBs in turn (see figure 63) and verifying that the PDU conformed to the logic chart shown in table 3:

Table 3. Matrix-Switching Logic

State of Bus A	State of Bus B	Result
Above 14 VDC	Above 14 VDC	PDU fed from bus A
Below 14 VDC	Above 14 VDC	PDU fed from bus B
Above 14 VDC	Below 14 VDC	PDU fed from bus A**
Below 14 VDC	Below 14 VDC	PDU off, set to bus A*

* Restoring bus A caused the PDU to revert back to bus A.
** Tripping bus B while the PDU was fed from bus A had no effect.

2.4.6 Implementation of Matrix Switching.

This scheme's ability to recover from bus failures without pilot intervention is attractive to original equipment manufacturers. The proposal to a helicopter manufacturer shows a practical implementation of the matrix-switching idea (see figure 65). To compensate for the weight increase of providing two bus feeds to each PDU, this scheme uses lower-weight 120 VAC three-phase wiring and a solid-state power supply to create 28 VDC at the PDU.

In this design, two buses (120 VAC) are run to each PDU. The PDU selects which bus to use based on the feed voltage of each bus, as outlined in table 3.

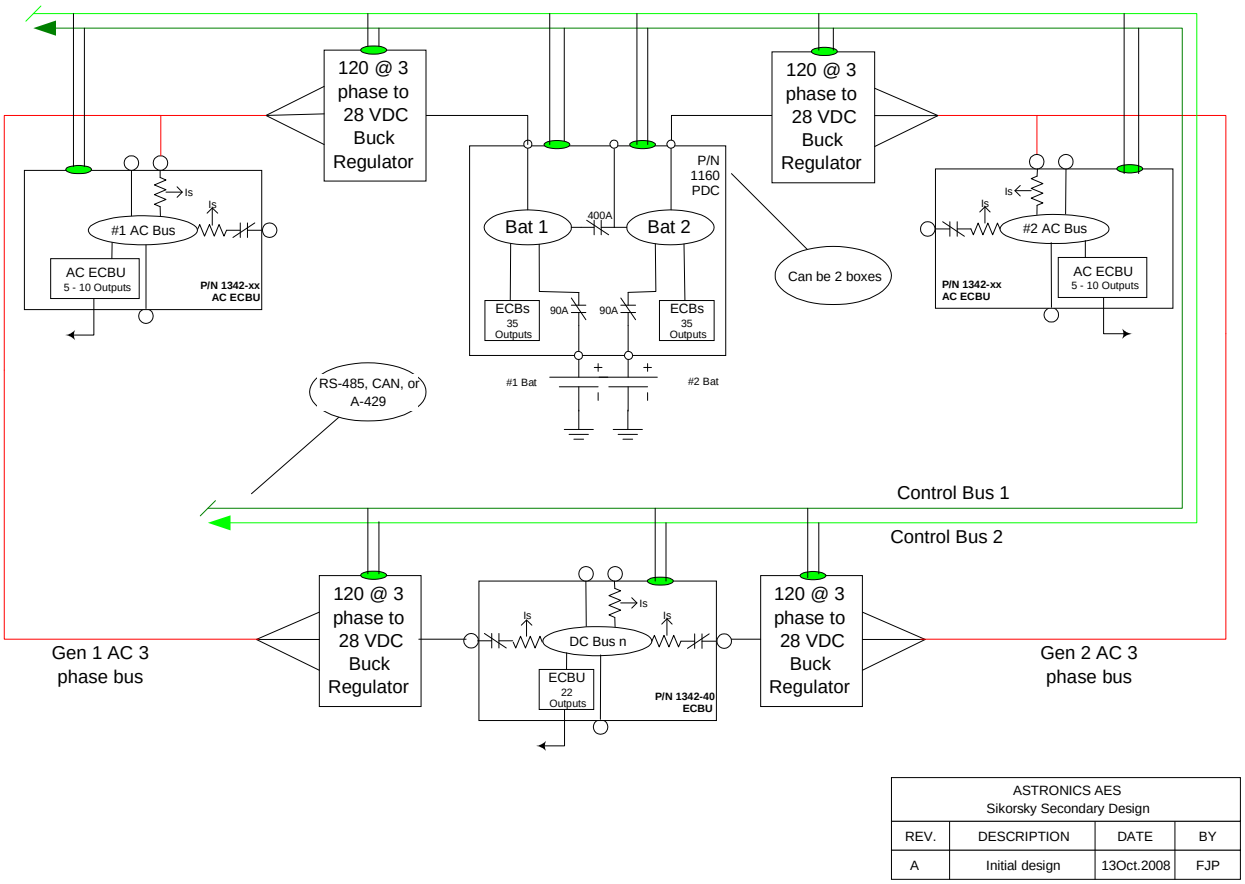

ASTRONICS AES Sikorsky Secondary Design			
REV.	DESCRIPTION	DATE	BY
A	Initial design	13Oct.2008	FJP

Figure 65. Military Helicopter Application of Matrix Switching

2.4.7 Expanded Matrix Switching.

In a distributed power system, with the PDUs close to the loads, most of the long wire runs in the aircraft are bus feeders wiring to the PDUs. Therefore, most of the wiring exposed to damage can be paralleled by alternative buses, which increases the aircraft wire weight dramatically. To save weight, the parallel-feed approach can be used only with the critical loads. The loss of a bus will have no effect on the loads with a dual-feed system, so damage to any one wire in the aircraft will result in the loss of only a single load and damage to a bus wire will result in no loss of power to any load. This can be incredibly useful in military applications. Figure 66 shows how the addition of "smart" contactors with current and voltage monitoring capabilities can automatically patch around bad powerfeed buses without direction from the PDUs.

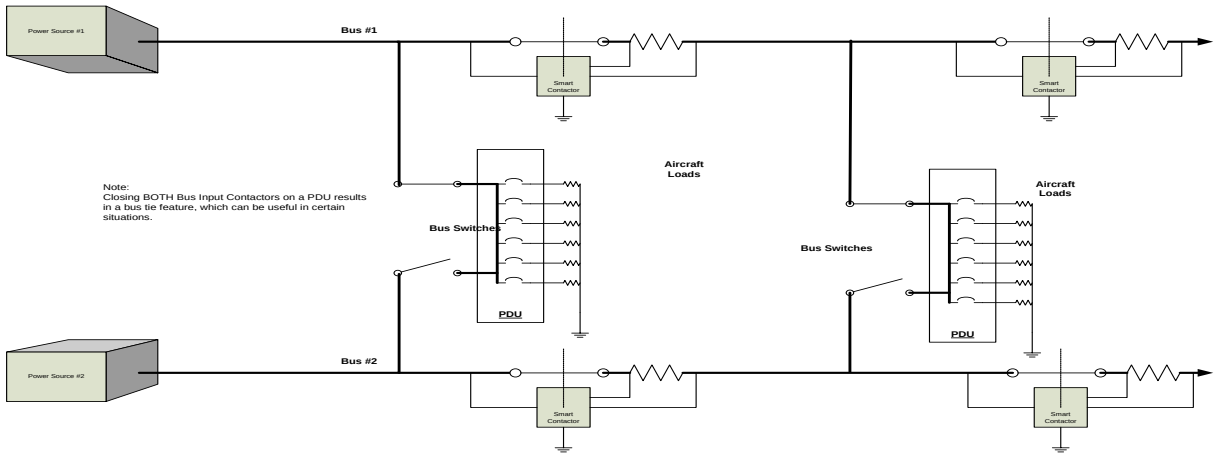

Figure 66. Matrix Switching With Smart Contactors

If one of the contactors senses a bus problem downstream, it can depower the bus. The PDUs downstream of the open contactor would then switch buses and no power would be lost to any load (see figure 67).

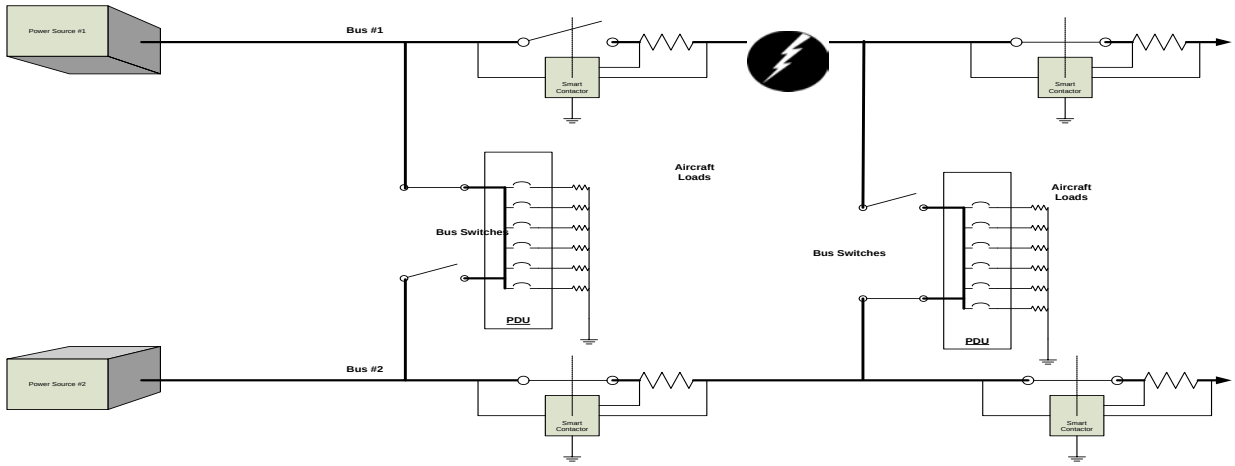

Figure 67. Matrix Switching Responding to a Fault

2.4.8 Results, Interpretation, and Next Steps.

2.4.8.1 Discussion and Analysis.

The tests verified that automatic-feed bus switching by PDUs is not only possible, but fairly easy to do. In an actual implementation of this system, a time delay after switching must also be added to prevent rapid oscillation between buses if bus A is, for some reason, unable to support the full PDU load without sagging. Another possible solution would be to give each bus three chances per flight and to switch permanently to the other bus after three tries.

Bus faults, aside from a complete power failure, such as parallel arc faults or series arc faults, can be detected by monitoring the bus voltage at the PDU; the PDU feed bus can then be switched and a fault recorded for repair personnel. In the case of the example system shown in figures 65 through 67, the faulty bus line can be depowered as well, preventing further damage or a fire.

Voltage monitoring logic could also be built into a "smart" contactor that could shut off a bus if it detected an overload of fault on its output and would not require the PDU to instruct it to do so.

Matrix switching is an effective tool to use on aircraft power systems to prevent feeder bus faults from removing power from multiple aircraft loads. It can be selectively applied to critical PDUs in a power system. Analysis of the input voltage waveforms by the PDU control module can also yield "free" arc-fault detection since voltage disruptions resulting from arc faults can be unambiguously identified and used by the system to shut off the faulted bus contactors, preventing wire damage and fires, without the use of a special arc-fault-detecting contactor. This arc-fault detection capability could also be built into a stand-alone "smart" contactor, which could also be used in a matrixed system to depower only the faulty part of a bus, thus preserving as much load on the original bus as possible.

2.5 ADVANCED CIRCUIT PROTECTION.

2.5.1 Introduction.

Advanced fault-detection algorithms were developed and tested to better detect low-level parallel arc faults and reliably detect series arc faults. An algorithm was developed and tested that allows the unambiguous detection of series arcs, and it is hoped that the same algorithm will be useful in detecting parallel arcs as well. The algorithm was specifically developed to reject the noise caused by pulsing loads, such as motor brushes and flashers that have caused false trips with other algorithms. The coordination of trips with upstream or downstream protective devices is achieved by scaling the sensitivity of the detection to the current rating of the device.

2.5.2 The ECB Response Time Determination and Improvement.

To implement the detection of low-level parallel arc faults and series arc faults, it is required that 100 µs current pulses be measured. Pulses under 100 µs in duration are too short to be meaningful in terms of arc events and are ignored. Pulses of 100 µs or greater need to be measured within a margin of accuracy of 1% or better. The tests indicated that the speed of the current measurement circuit in the existing ECB had to be improved. This was done by adjusting the filter poles in the current amplifier. The test results and the changes made to the circuit are shown in figure 68.

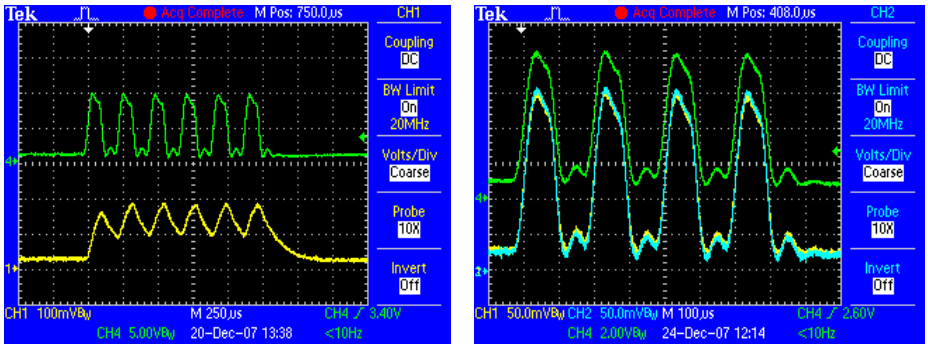

Figure 68. Frequency Response Improvement to the ECB

2.5.3 Fault Current Capability of the Prototype.

Tests were performed on the prototype hardware to determine whether the printed circuit board conductor design was sufficiently robust to handle the currents required during the maximum fault-detection time with the maximum possible current capacity of the source and shortest possible load connection wiring. It was determined that the fuse current of the prototype traces was insufficient in certain areas; the printed circuit board was modified to correct the issue.

2.5.4 Bolted Fault Trip Tests and False Trip Immunity Tests.

An ECB will be required to switch "on" into a high inrush load. The ECB needs the ability to differentiate between a normal inrush and a bolted fault. It must allow inrush, but trip before damage occurs to itself or the wiring. See section 2.1.6.1 for a report of the tests that were performed to verify the developed algorithms.

2.5.5 Aircraft Load Tests.

Aircraft loads have many odd and unusual waveforms, and they must be tested with the ECB to ensure that nuisance trips or other problems do not occur. See section 2.1.6.2 for a report of the tests that were performed to verify the developed algorithms.

2.5.6 Control Module Development.

A plug-in module was designed to interface between the plug-in ECBU cards and a source of RS-232 commands. A data dictionary of the serial peripheral interface (SPI) bus to be used for development of the control card was also compiled and code was written for the module. Figure 69 shows the completed control module.

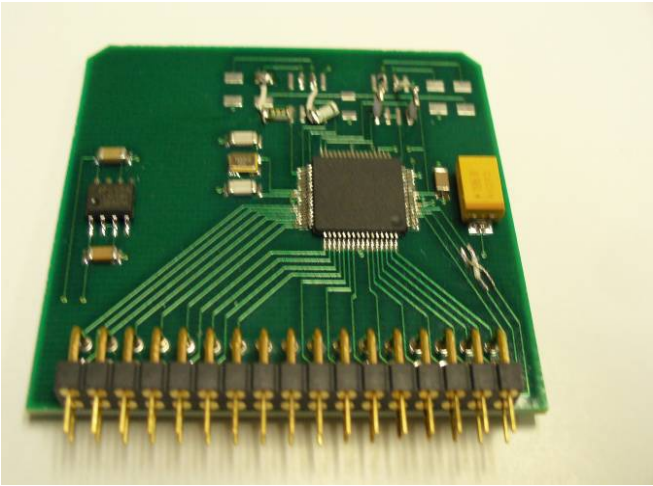

Figure 69. Control Module

2.5.7 High-Level Parallel Arc Detection on Secondary Loads.

High-level parallel arcs on wiring to secondary loads, with a fault current that rises above the instant trip threshold of the ECB, are detected within 2 ms, depending on the setting of the instant trip level. The instant trip threshold is also designed to protect the ECB semiconductors from destructive currents, so sizing the semiconductors appropriately for the maximum expected inrush and then setting the instant trip threshold within the safe operating area of the semiconductors yields very good results with detecting high-level parallel arcs. In figure 70, a high-level arc, created by cutting into the wire with a razorblade, shows the effectiveness of the instant-trip circuit.

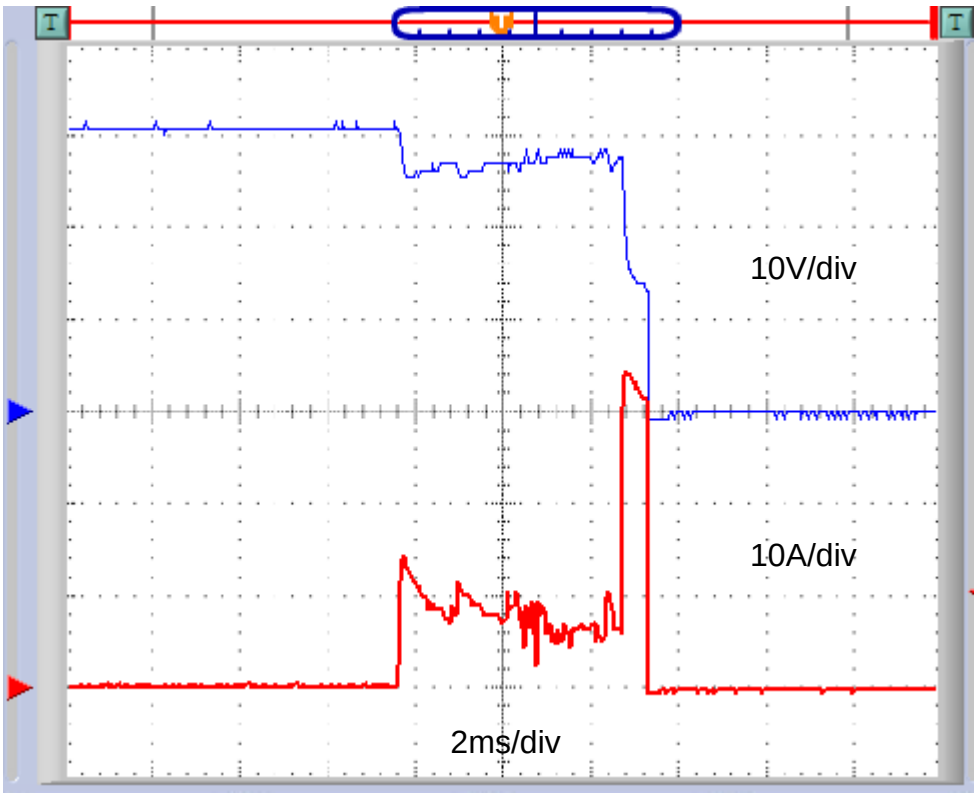

Figure 70. High-Level DC Arc on a 3A DC ECB

The inrush of an incandescent bulb or a capacitor bank is generally 10 times the normal current of the load. This is true only of capacitor inrush surges; the peak is limited by source impedance and wiring impedance. Generally, equipment designers using capacitor banks on t heir equipment limit inrush to avoid peak currents in excess of 10 times the breaker rating. Figure 71 shows inrush currents for typical capacitive and incandescent loads.

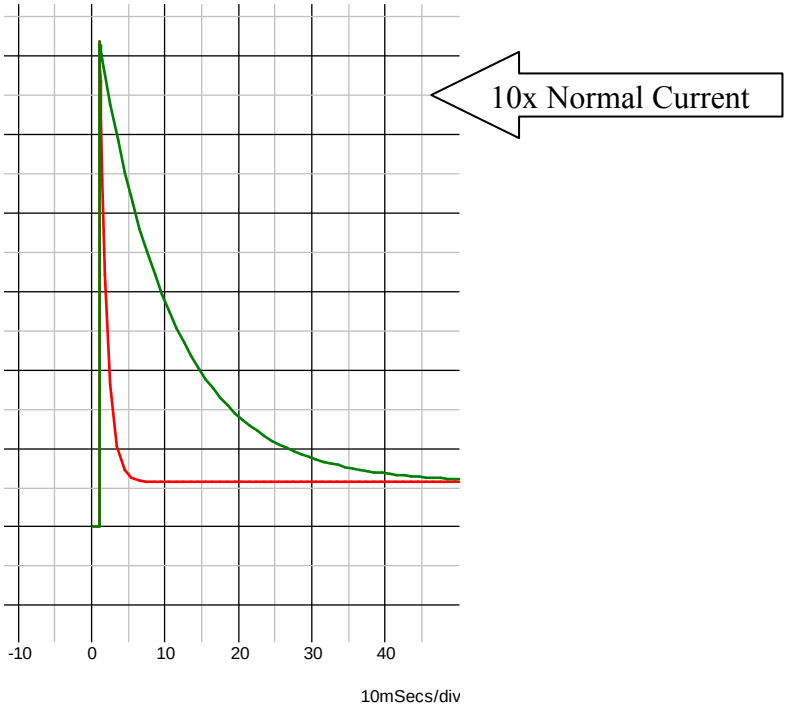

Inrush surge waveforms. Red is capacitor and green is incandescent bulb.

Figure 71. Inrush Currents

2.5.7.1 High-Level Parallel Arc Fault Detection on Buses and Feeders.

Figure 72 shows the bus voltage, measured at the ECBU input, which resulted from a parallel arc fault to ground on the feed bus and was created by using a grounded razorblade guillotine tester. The bus voltage drops by 6V or more in an erratic pattern during the course of the arc event. This waveform is fairly typical.

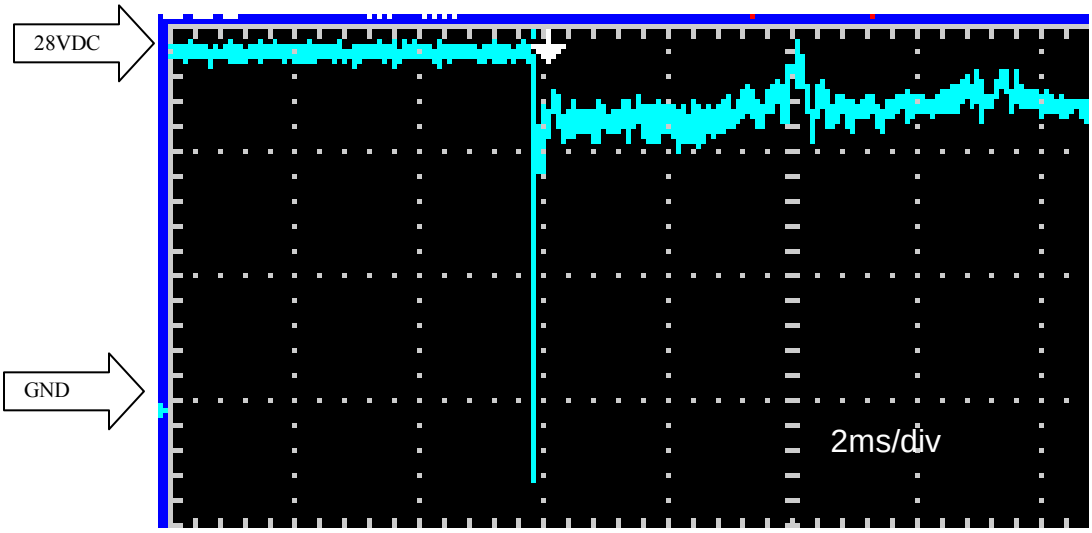

Figure 72. Parallel Arc Fault Bus Voltage

The detection of changes in the magnitude of the bus voltage over a certain time period, such as those seen in figure 72, can be used to determine the health of the feed bus. Because the PDU is sensing the voltage feeding it, rather than the current, detection of parallel arc faults would not be subject to false trips by loads that have high pulse current requirements. The PDU, on sensing a signal of this type, can send out a message that, for example, causes the system to shut off a certain power source or open another contactor to depower the faulty bus.

2.5.8 Develop Algorithm and Code for Serial Arc Detection on Secondary Loads.

A series arc fault is defined as ten interruptions of the current that last 200 µs in 100 ms intervals. These interruptions should be nonperiodic (see figure 73). Periodic is defined by all the interruptions happening longer than 25% of the time between the interruptions (see figure 74). An interruption is a point where the current drops below 10% of the average current of the circuit.

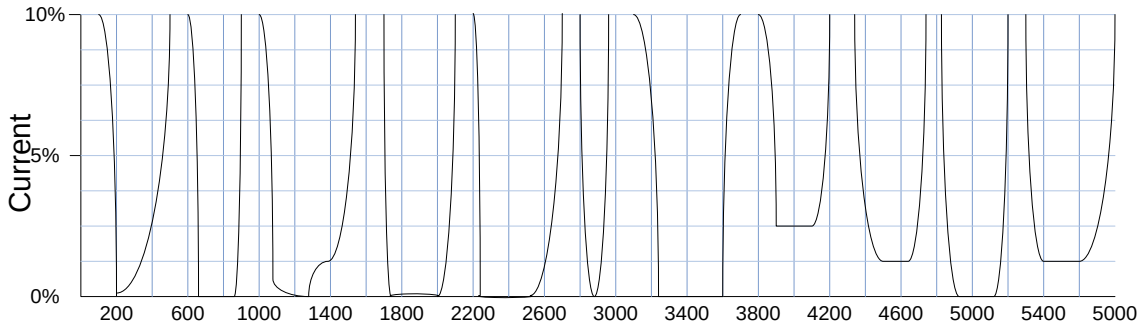

Figure 73. Nonperiodic Waveform

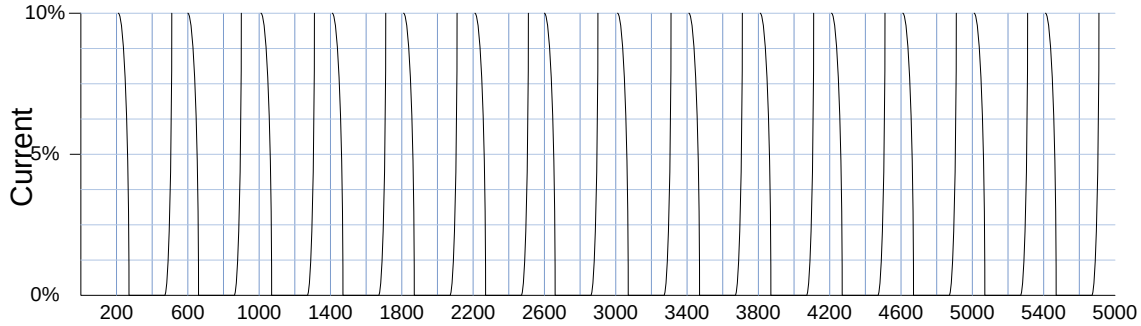

Figure 74. Periodic Waveform

The algorithm runs in a 100 µs loop. Thus, to keep track of the pulses, a ten-element table is used. The elements hold a countdown number. Each time through the loop, entries in the table that are nonzero are reduced by one. Any time an interruption is encountered, the value of 1000 (the number of 100 µs in 100 ms) is placed in the current table entry if the entry is zero and the cell pointer is advanced by one place. If the entry is not zero, the table is considered nonperiodic. If it is nonperiodic, an arc event occurs; once this happens, a 2-second timer starts to count down. If the timer is already counting, then the CB has been tripped.

2.5.8.1 Series Arc Fault Detection on Buses and Feeders.

In the event of a series arc in the feeder to an ECBU, the voltage-drop pattern is even more dramatic than that seen during a parallel arc event. The waveform in figure 75 was created by using a vibration table with a purposely loosened screw contact on the feed to an ECBU. Voltage on the bus bars of an ECBU should never show this much variation, even with a heavily pulsed load sharing the same bus.

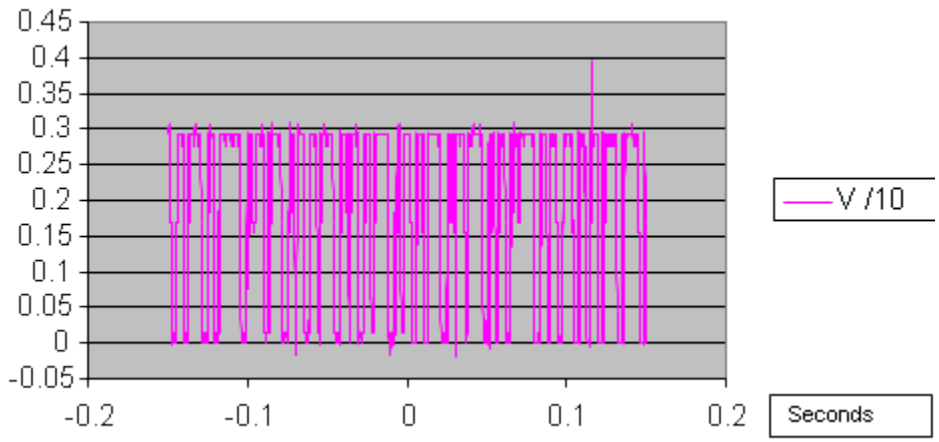

Figure 75. Series Arc Fault Bus Voltage

The detection of changes in the magnitude of the bus voltage over a certain time period, such as those seen in figure 75, can be used to determine the health of the feed bus. Because the PDU is looking at the voltage feeding it rather than the current, detection of series arc faults (loose connections, etc.) would not be subject to false trips by certain loads (e.g., brushless motors or strobes) that have high pulse current requirements. The PDU, sensing a signal of this type, could send out a message that, for example, could cause the system to shut off a certain power source or open another contactor to depower the faulty bus.

2.5.9 Develop Algorithm and Code for Low-Level Parallel Arc Detection.

An algorithm for the detection of low-level parallel arc faults was defined for the ECBs. The current measurement amplifier speed had to be improved to be able to measure the short-duration current spikes that had to be measured (see section 2.5.2). High-level arcs are easily detected with a peak current detection circuit, with a small amount of capacitive integration added to allow for inrush surges. The high-level arc-detection function trips the breaker within 2 ms of the detection of a high-level arc, but lower-level arcs that do not rise to a 10x level for the 2 ms required for detection are missed (see figure 76, which shows a low-level arc caused by a salt water drip on a wire with cracked insulation). Several attempts were made to identify low-level arcs with integration and peak detection techniques, but waveforms having pulsing currents as part of the normal operation reliably nuisance trip these types of circuits. As in the series arc detection method, periodicity of current pulses must be determined, and only sufficient nonperiodic results should result in a trip. The parallel arc fault detection algorithm that was developed as a result of this observation is identical to that developed for series arc detection, but

it looks at the periodicity of current pulses above the average current drawn by the load. Adjustment of the detection magnitude and the number of nonperiodic excursions occurring in a specific time window are made software-adjustable to allow for further development efforts and possible dynamic customization.

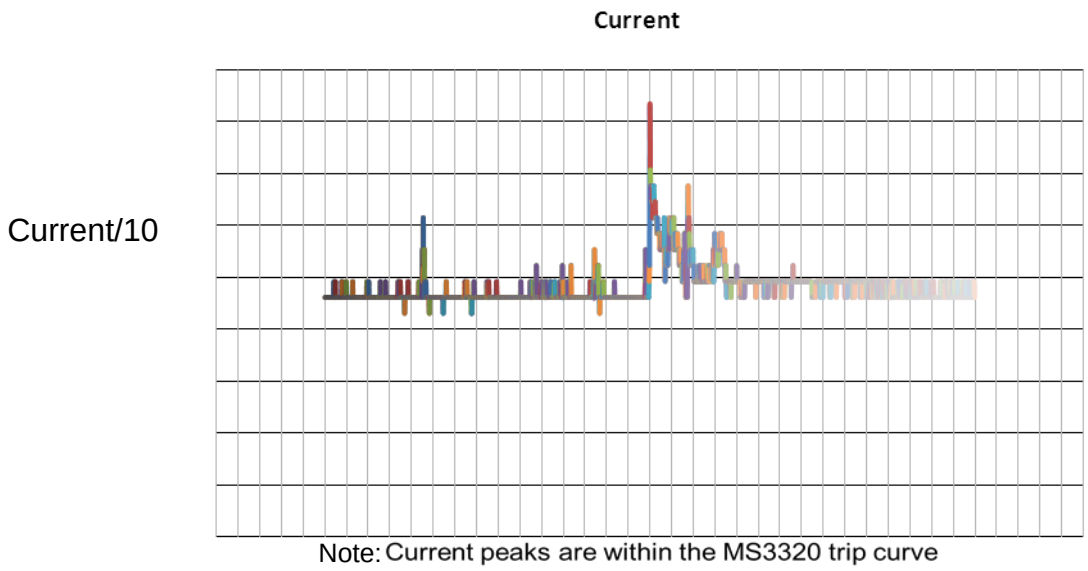

Figure 76. Low-Level Arc in 28 VDC Circuit

2.5.10 The GFI Protection.

A GFI device for 120 VAC circuits (see figure 77) measures the current output of the ECB and compares it with the current returned of a separate neutral, with the easiest method being to use a small current transformer with two primary windings. Output current and return current cancel each other out within the transformer core. Any output voltage from the transformer is due to mismatched current. Mismatched current can be due to a ground fault or capacitive effects on the wiring. The comparator can be adjusted to trip on various current mismatches, with or without averaging. This circuit is capable of interrupting on mismatches at the 6–30 mA level, which is required to ensure against electrocution.

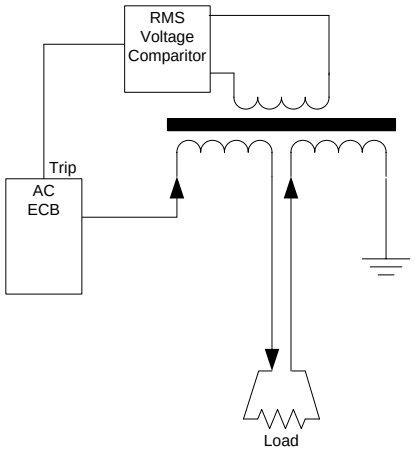

Figure 77. A GFI

A GFI is also possible with a 28 VDC ECB; however, the lower DC voltage is not as hazardous as 120 VAC, and low-level arc fault detection is able to interrupt most ground faults. A DC implementation of a 28 VDC circuit involves two current shunt resistors and a magnitude comparator.

2.5.11 Results, Interpretation, and Next Steps.

The detection of series arc faults using the algorithm developed was successfully performed on the FAA 737 aircraft. The parallel arc-detection algorithm could not be tested on the 737 platform because of the memory and processor limitations of the prototype ECBs. The laboratory testing of the algorithm shows that it has much potential, especially with the ability of the microprocessor circuit to, within a limited range, configure the detection characteristics to match the characteristics of each load, a concept which is being further explored at this time.

2.6 THE PLC.

2.6.1 Summary.

In this task, four separate concepts were investigated:

1. Commercial-Off-the-Shelf (COTS) STMicroelectronics demonstration kit

2. Orthogonal Frequency Division Modulation (OFDM)

3. One-wire sensor approach

4. Digital data encoded as current pulses

2.6.2 Generic PLC Challenges.

- Low system impedance—A power system is specifically designed to provide clean, noise-free power. Voltages imposed on the power bus tend to get filtered out.

- Noise susceptibility—Locally generated noise corrupts the data.
- Electromagnetic interference (EMI) susceptibility—Fields from external transmitters corrupt the data.
- Noise Generation—The carrier used for PLC can be considered noise.
- EMI generation—The carrier can radiate at inconvenient frequencies.

2.6.2.1 Power System Noise.

All aircraft have noisy loads. The brushless fan in figure 78 is a good example of a noisy DC load. The DC power source is very efficient at filtering the voltage, as the power feeder in figure 79 shows. Attempting to use any commercial system that tries to superimpose a voltage onto what amounts to a good low-pass filter is difficult.

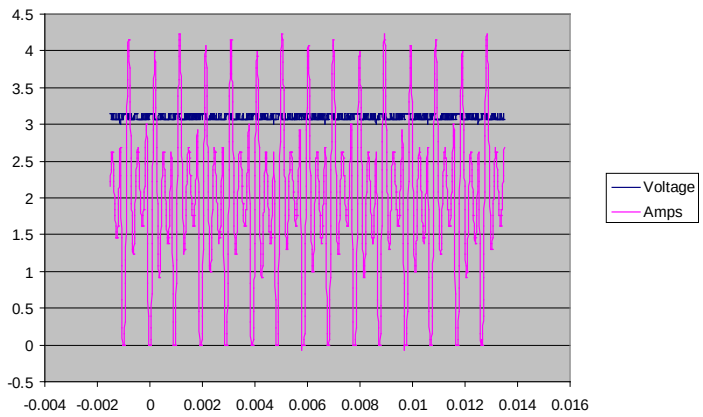

Figure 78. Power System Noise

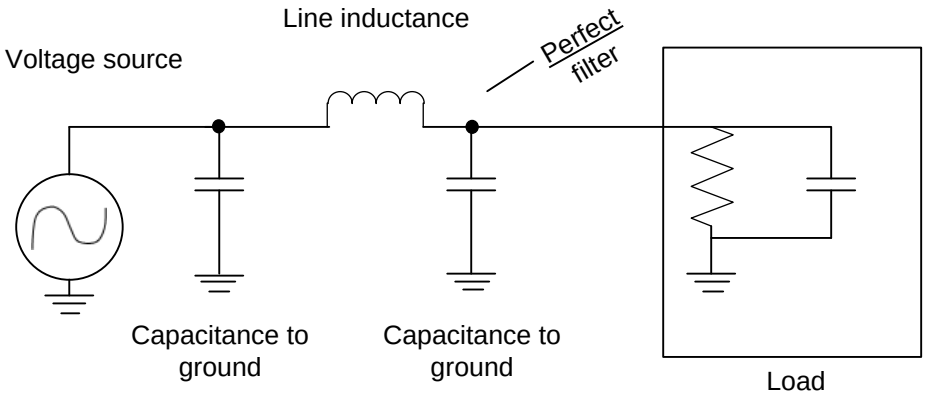

Figure 79. The Powerline as a Filter

2.6.3 Evaluation of Commercial PLC Technology.

2.6.3.1 The FSK Method.

The STMicroelectronics demonstration came from a simple COTS frequency-shifting key (FSK) powerline transceiver kit. This demonstration kit yielded few substantial results; while simple data were successfully transmitted, the quality was not as high as was necessary for our purposes, with transmission speed dropping by 50% when subjected to random frequency noise sources.

2.6.3.2 The OFDM Method.

The OFDM uses multiple subcarrier signals to send separate packets of information parallel to each other and is a PLC method that is not highly susceptible to interference (or interfering with anything else). Each subcarrier signal is chosen to be orthogonal to the other so that no self-interference is introduced. It is relatively easy to remove background noise and extract the desired signal and, overall, it is a highly robust method. A major drawback to this method of PLC, however, is the inherent susceptibility to Doppler-shifting and subcarrier synchronization problems. Complexity and expense are also issues encountered with use of this technique.

2.6.3.3 The One-Wire Method.

The aptly named one-wire sensor approach uses a single wire for both power and communication. The key feature of these sensors is the use of a capacitor, which stores a charge to power the device when the wire is being used for other communication purposes.

2.6.4 Current Pulse Method.

The current pulse method was developed to communicate serial digital data over a powerline by pulse-modulating the current consumed by the load. Figure 80 shows the basic transmitter and receiver circuit concepts. This method differs from previously known PLC methods in that it uses variations in the load current to transmit data rather than superimposing AC voltage onto the powerline. The current modulation method can be used on highly capacitive DC powerlines without filtering between a low-impedance power source (i.e., a battery) and the load. The use of an ECB as a receiver for the current modulated data also eliminates the need for additional receiver circuitry.

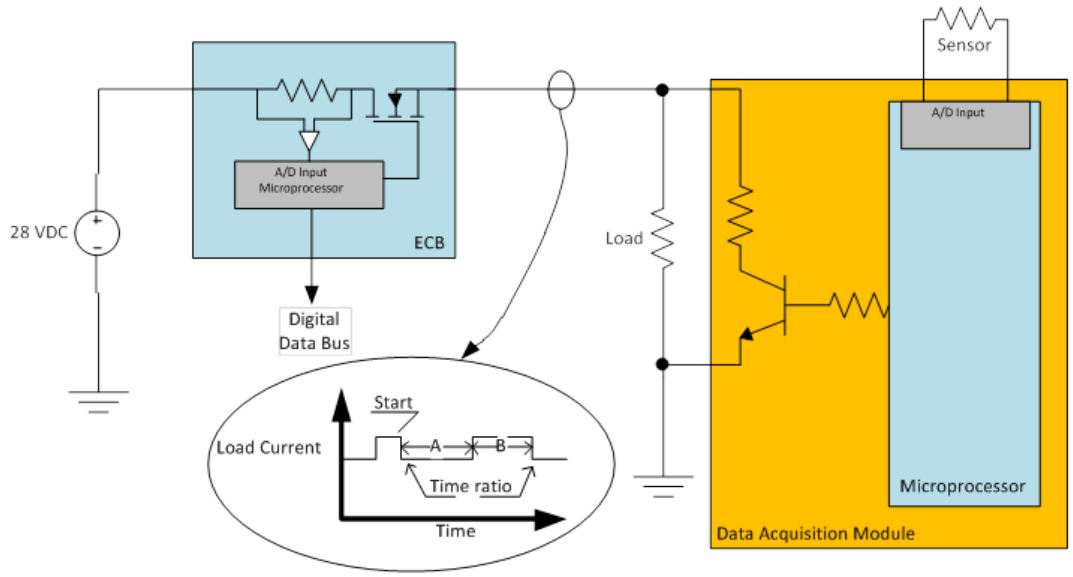

Figure 80. Current Mode PLC

One implementation of this method uses a serial A/D with an SPI output as the serial digital data source, and makes use of a clock oscillator and divider to operate the device without a microprocessor. Two transistors' current sources create 1's (mark) and 0's (space) in synchronization with the clock. The current from these transistors is summed with the load current and measured and decoded by the ECB current-measurement shunt and associated microprocessor. A microprocessor could also be used in place of the A/D to operate the mark and space transistor current sources. The frequency of the clock and the magnitude of the mark and space current pulses are chosen based on the possible variations in the load current. It is anticipated that 1 ms clock pulses will be used for most applications, making an update of an 8-bit data word possible in less than 10 ms, which is compatible with the 100 ms sampling rate required by most analog sensors.

A variation of this process would involve the use of a high-frequency sinusoidal current (selected to have a low impact on EMI emissions) with the digital data encoded as frequency shifts in the carrier, or as a presence or absence of the carrier. Yet another variation would transmit current pulses with a duty cycle proportional to an analog value to be communicated or current pulses having a magnitude proportional to the analog value to be communicated.

2.6.5 Experiments Conducted.

2.6.5.1 FSK Method.

By using a simple COTS STMicroelectronics demonstration kit, the team at Astronics AES was able to send and receive simple text message data streams with noise injected on a powerline. The demonstration kit worked well enough to prove that PLC was quite possible. However, it was ultimately decided that such a COTS solution for PLC does not meet the stringent requirements of aerospace hardware.

2.6.5.2 Current Pulse Method.

This new method, which uses digital data encoded by pulses, was successfully simulated (see figure 81). A breadboard was constructed and is currently being tested as a part of another FAA project.[2]

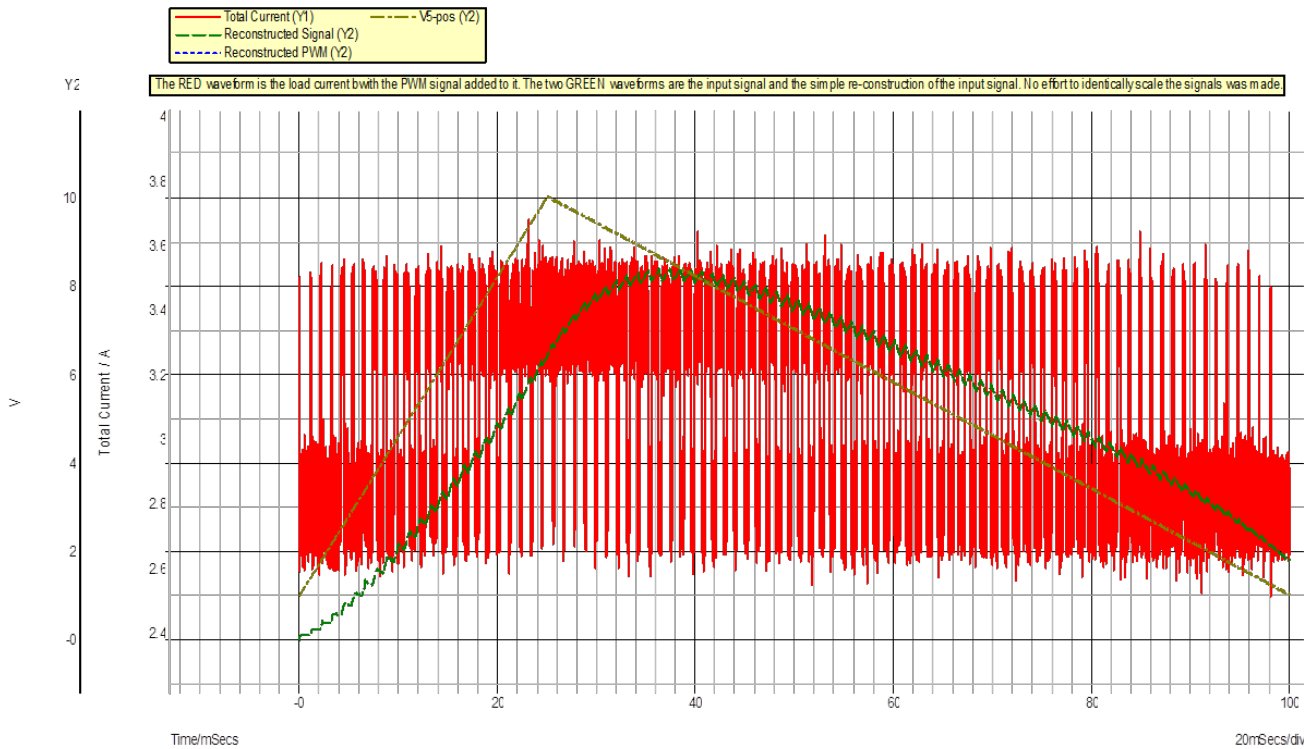

Figure 81. Current Mode PLC Simulation

2.6.6 Results, Interpretation, and Next Steps.

Simple and inexpensive current-encoded methods can be used to reliably send data from sensors to aircraft systems. Using this method to transmit digital data is easy and inexpensive as long as the data rate is lower than 100 twelve-bit words per second. Higher data rates are possible, but will require a higher speed A/D than is presently used in the ECB microcontroller. The lower frequency is adequate for almost all sensor applications. The use of the EPDS as the hub of the system allows PLC to be implemented with no additional receiver hardware, no additional signal wiring, and minimal transmitter circuitry.

The current pulse method has some limitations on its application. The data path is limited to a one-way flow between the power system load and the ECB, and the signal is undetectable on the power bus feeding the ECB. Loads that have a pulsing current consumption can also be a problem, but only for data transmitted to that particular ECB.

[2] Potter, F. and Locken, N., "Sensory Prognostics and Management Systems Implemented in an Electronic Power Distribution System," FAA Report DOT/FAA/TC-13/14, June 14, 2013.

3. PROJECT CONCLUSIONS AND OBSERVATIONS.

The following are the conclusions reached as a result of this project:

- A typical aircraft electrical system is extremely difficult to define because the types of loads vary by aircraft size and age. The task evolved into collecting a suite of loads with varying characteristics and designing test fixtures to simulate various aircraft faults. The difficulty of obtaining certain loads, or the high cost of them, required the development of a system of playing back recorded load data rather than having a larger collection of aircraft equipment on hand.

- The hardware prototype was packaged in a way that was flexible and modular, but not enough microprocessor capability was designed into the ECB to support the subsequent development of fairly complex arc fault detection algorithms. The traces of the larger sizes of the ECBs and the interconnecting motherboard had to be enlarged after the peak capacity of the aircraft 28V system was determined to be at least 1000A under common circumstances.

- A GUI for the ECBU is difficult to define from the human factors standpoint. This research showed that the pilot has a very different opinion from the maintenance as to how the system should look. The use of an operating system in the display device introduced some delays in the feedback of status, which can only be eliminated by obtaining or creating an operating system designed specifically for this task.

- Prognostic algorithms of the simplest kind (with the presence or absence of predefined normal current, operating time) are useful to the maintenance crew for diagnosing immediate or imminent failures. These algorithms require little effort to develop beyond the categorization of the load. More complex algorithms that look at variation of current over time, correcting for variability due to environmental and operational factors, require a great deal of development. They are not useful to the flight crew and are best performed by data collected by the EPDS and correlated to other flight data, and to past data, by ground personnel.

- Matrix switching is an interesting concept, but may double the cost of EPDS hardware.

- The exclusion of periodic data from the determination of arc events is very effective in avoiding nuisance tripping. Even more effective is the capability to adjust the ECB sensitivity to match the normal characteristic of each load. The “one size fits all” algorithms used in the past do not fit any circumstances very well.

- A PLC is difficult to achieve with COTS circuitry because of the high noise environment of aircraft powerlines. The current pulse technique is useful in overpowering the noise, but suffers from its nature of being a one-way method, sending data from the load to the ECB only.

APPENDIX A—TEST REPORT—SMART PANEL TESTING AT THE FEDERAL AVIATION ADMINISTRATION WILLIAM J. HUGHES TECHNICAL CENTER, FEBRUARY 7-9, 2012

A.1 INTRODUCTION.

Astronics Advanced Electronic Systems (AES) tested the Astronics AES smart panel on the Boeing 737-200 test aircraft kept at the Federal Aviation Administration (FAA) William J. Hughes Technical Center in Atlantic City, NJ. The objective was to install the smart panel in the aircraft and test it under various aircraft power conditions with both actual and simulated aircraft loads. Additionally, various fault and overload tests were performed. A test procedure document with annotations and results is attached to this narrative report as appendix A. Appendix B shows photos of the smart panel installation, block diagrams of the unit, and associated drawings and schematics.

A.2 ACTIVITIES: TUESDAY – FEBRUARY 7, 2012.

A.2.1 SETUP AND INITIAL CHECKOUT.

Figure A-1 shows the July 2011 spreadsheet for the wired smart panel and applied aircraft 28 voltage direct current (VDC) and 115 VAC power.

B737 P6-3 Panel Loads

Load 28V	TermStrip #	28VDC	28VAC	12VRMS	115VAC 400	Location	Source	Schematic Page	Notes	ECB Term	ECB #		
C84 Fuel Control Ctr Lft	1	2.5				P71	28V Bus 2	28-15-01		TB2-1	1	1.26mv@5v/a	
C85 Fuel Control Ctr Rht	2	2.5				P67	28V Bus 1	28-15-01					
C323 Overhead primary	3		7.5			P65	28VAC Transfer BUS 1	33-12-01					
C325 Secondary	4			7.5		P63		33-12-01	Fed from C323, C325 also feeds 5VAC				
C164 Lav Mirror Ext Pwr	5				2.5	N73	External Power Bus	33-26-31	Always on when ground power applied	TB3-13	23	125mV@5A/V	
C360 Eng 2 Shutoff Valve	6	5				N71	28V DC Hot BAT BUS	26-21-00		TB2-8	15	3.77mv	
C359 Eng 1 Shutoff Valve	7	5				N67	28V DC Hot BAT BUS	26-21-00		TB1-8	16	3.83mv	
C571 Air Cond (M Caution)	8	2.5				N66	28V Battery Bus	33-18-21		TB1-1	2	4.48mv	
C573 Anti Ice	9	2.5				N65	28V Battery Bus	33-18-21		TB2-2	3	12.02mv	
C572 Fuel	10	2.5				N64	28V Battery Bus	33-18-21					
C132 No 1 Bus	11	2.5				N63	28V Bus 1	33-18-20					
C131 Battery (M Caution)	12	2.5				N62	28V Battery Bus	33-18-20					
C316 Section 4	13	2.5				N61	DC BUS2 thru 311	33-18-11	C310,C311,C312 diode or'ed together				
C317 Section 5	14	2.5				N60	DC BUS2 thru 310	33-18-11	C310,C311,C312 diode or'ed together				
C318 Section 6	15	2.5				N59	DC BUS2 thru 312	33-18-11	C310,C311,C312 diode or'ed together				
C570 Pitot Fst Officer Static	16	2.5				N57	28V Bus 2	30-31-01		TB1-2	4	5.8	
C569 Pitot Captains Static	17	2.5				N56	28V Bus 1	30-31-01					
C137 Door Lock	18	2.5				M73	28V Bus 2	52-51-01		TB2-3	5	60.62mv	
C361 Manifold Valve	19	5				M69	28V Battery Bus	28-22-01		TB2-9	17	24mv	
C284 Electronic Panel	20		2.5			M65	28VAC Transfer BUS 2	33-11-41					
C219 Crkt Brkr Panel	21		2.5			M63	28VAC Xfer BUS 2	33-15-01					
C133 Dim & Test	22	5				M62	28V Battery Bus	33-18-11		TB1-9	18	438.8	
C313 Section 1	23	2.5				M61	DC BUS2 thru 310	33-18-11	C310,C311,C312 diode or'ed together				
C314 Section 2	24	2.5				M60	DC BUS2 thru 310	33-18-11	C310,C311,C312 diode or'ed together				
C315 Section 3	25	2.5				M59	DC BUS2 thru 311	33-18-11	C310,C311,C312 diode or'ed together				
C335 **O/F** 28V Prim PNL & Instru	26	2.5				L64	28VAC Xfer BUS 2	33-11-21					
C331 Capt and Center 28V Pnl Instru	27		7.5			L62	28VAC Xfer BUS 1	33-11-11					
C310 Mstr DIM Bus Indicator [Battery]	28	5				L61	Battery Bus	33-18-11		TB1-10	19	575mv	test setting
C311 " [No 1 DC]	29	5				L60	DC Bus 1	33-18-11		TB1-11	20	377.8mv	test setting
C312 " [No 2 DC]	30	5				L59	DC Bus 2	33-18-11					
C209 Door Warning DC	31	2.5				K72	DC Bus 2	52-71-01					
C355 Temp Indicator (Fuel System)	32		2.5			K71	28VAC BUS-2	28-42-01					
C397 Quantity (Fuel System)	33				2.5	K70	AC Standby Bus	28-41-01					
C382 IND (Fuel Flow) (Fuel System)	34				2.5	K68	115 XFER BUS-1	73-31-01					
C398 EP Ground Fueling (Fuel Sys)	35				2.5	K67	External Power Bus	28-41-01	Always on when ground power applied				
Flashlight	36	1			1	K66							
C282 Dome White Cabin lighting	37	2.5				K65	28VDC BAT BUS	33-16-01		TB1-3	6	167.9mv	
C283 Control Stand Light	38		2.5			K64	28VAC Xfer BUS 1	33-16-01					
C159 Background Lighting No 1	39		2.5			K63	28VAC Xfer BUS 2	33-14-01					
C160 Fluorescent lights	40				2.5	K62	115 XFER BUS-1	33-14-01		TB3-14	24	48mV@5a/v	
C161 Standby Flood & Compass	41	2.5				K61	28V Battery Bus	33-11-51		TB2-4	7	19.56mv	
C308 Map & Kit	42		2.5			K60	28VAC Xfer BUS 1	33-17-01					
C309 Observers Reading	43		2.5			K59	28VAC Xfer BUS 2	33-17-01					
C845-A Center Tank Boost Pump Left	61-A				8	P69	115AC BUS-2	28-23-01		TB4-11	33	x	
C845-B Center Tank Boost Pump Left	61-B				8	P69	115AC BUS-2	28-23-01		12			
C845-C Center Tank Boost Pump Left	61-C				8	P69	115AC BUS-2	28-23-01		13			
C846-A Center Tank Boost Pump Right	62-A				8	N69	115AC BUS-1	28-23-01					
C846-B Center Tank Boost Pump Right	62-B				8	N69	115AC BUS-1	28-23-01					
C846-C Center Tank Boost Pump Right	62-C				8	N69	115AC BUS-1	28-23-01					
C828-A Tank 2 Boost Pump Aft	63-A				8	M71	115 XFER BUS-2	28-23-01					
C828-B Tank 2 Boost Pump Aft	63-B				8	M71	115 XFER BUS-2	28-23-01					
C828-C Tank 2 Boost Pump Aft	63-C				8	M71	115 XFER BUS-2	28-23-01					
C826-A Tank 1 Boost Pump Aft	64-A				8	M67	115 XFER BUS-1	28-23-01					
C826-B Tank 1 Boost Pump Aft	64-B				8	M67	115 XFER BUS-1	28-23-01					
C826-C Tank 1 Boost Pump Aft	64-C				8	M67	115 XFER BUS-1	28-23-01					
C829-A Tank 2 Boost Pump Forward	65-A				8	L71	115 XFER BUS-2	28-23-01					
C829-B Tank 2 Boost Pump Forward	65-B				8	L71	115 XFER BUS-2	28-23-01					
C829-C Tank 2 Boost Pump Forward	65-C				8	L71	115 XFER BUS-2	28-23-01					
C827-A Tank 1 Boost Pump Forward	66-A				8	L67	115 XFER BUS-1	28-23-01					
C827-B Tank 1 Boost Pump Forward	66-B				8	L67	115 XFER BUS-1	28-23-01					
C827-C Tank 1 Boost Pump Forward	66-C				8	L67	115 XFER BUS-1	28-23-01					

Blue	Phase A
Yellow	Phase B
Red	Phase C

28VDC	27
28VAC	9
115VAC	5
3-phase 115VAC	6

Figure A-1. The Boeing 737 Load Data Sheet

Two anomalies were observed immediately on power-up:

- The Flight Display Systems (FDS) monitor showed interference lines and flickered on and off.

- The smart panel controller was inoperative (no switch response or light-emitting diode (LED) status).

Cycled the aircraft 28 VDC and the smart panel controller became operative. The FDS monitor remained as it was. As a quick check, verified electronic circuit breakers (ECBs) 1, 2, 5, 19, 20, 23, and 33 were operational.

The graphical user interface (GUI) software on the FDS monitor was demonstrated. It was difficult to see the current change because the aircraft loads were low and the GUI current graphical display was scaled for a 15A load current.

Resistors and resistive heaters were then acquired to use as test loads.

A.3 COMMENTARY.

Investigation of the smart panel—after it was returned to the Astronics facility in Redmond, Washington on February 29, 2012—showed no interference lines or other anomalous behavior. Because the initial on-aircraft run was performed with the battery disconnected from the bus, a very high 800 Hz ripple was present. The interference markedly decreased after the aircraft battery was reconnected. When a comparable 400 Hz ripple was introduced into the 28 VDC supply at the Redmond laboratory, no comparable interference was observed. The problem was most likely caused by power-source noise along with a high-resistance ground scheme, as well as the separation of direct current (DC) and computer power grounds. Further investigation is required if this matter is to be unequivocally resolved.

A.4 ACTIVITIES: WEDNESDAY, FEBRUARY 8, 2012.

A.4.1 INSTRUMENTATION SETUP.

An overload test load was constructed from three 0.4-ohm resistors in a series/parallel arrangement. The final configuration measured 0.59 ohms with the digital multimeter (DMM). A nominal 1.8-ohm load was also constructed from four 1.8-ohm resistors. The final configuration measured 1.80 ohms with the digital multimeter (DMM). A 10-ohm precision resistor was also prepared for use as a calibration load. This resistor measured 9.60 ohms with the DMM. A Nicolet scope was connected to the 28 VDC bus bar of the modular electronic circuit breaker (ECBU). Between 5 and 6 volts of 800 Hz (rectified 400 Hz) peak-to-peak noise were observed on the 28 VDC bus. It was noted that the capacitance of the scope probe provided some stability for the 28 VDC. The FDS monitor cleaned up a little bit and the smart panel controller remained operational from this point forward.

A.4.2 INSTRUMENT AND CALIBRATION CHECK ON ECB 6 WITH A 10-OHM RESISTIVE LOAD.

The results were: Scope = 2.4A, GUI = 2.2A, Bus Voltage = 25 VDC.

A.4.3 DC LOAD TEST.

A 1.8-ohm resistive load was connected to ECB 6, providing an 80% load on the 15A breaker.

The results were: Scope = 12A, GUI = 11.2A, Bus Voltage = 25 VDC. This calculates to a wiring and ECB resistance of approximately 0.3 ohms.

The 0.59-ohm load was then connected in place of the 1.8-ohm load on ECB 6 with power applied to provide a 2x overload (see figure A-2). The overload test tripped ECB 6.

Approximately 29A, GUI = OVERLOAD. The current corresponds to the 0.59 ohms of load resistance, plus the previously calculated 0.3 ohms of wiring and load resistance.

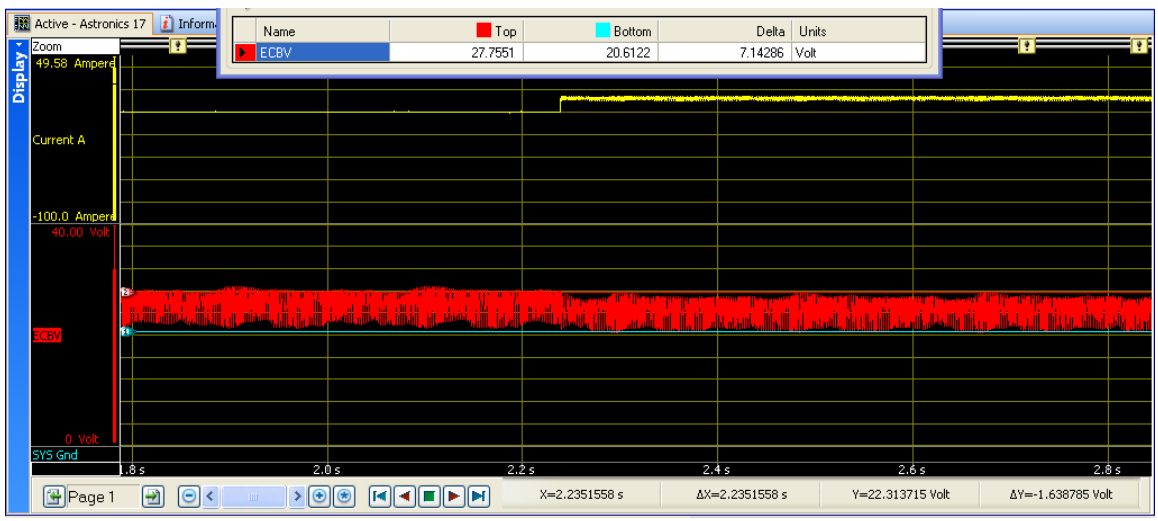

Figure A-2. Scope Trace: Astronics AES 17—ECB 6 With 1.8 Ohm Load

A.4.4 COMMENTARY.

No anomalies were observed at this stage. It should be noted that the connection of the test probe to the 28 VDC bus caused a change in the interference pattern seen on the GUI display, indicating that high-frequency noise was a factor in the performance issues seen on the previous day. Connection of the aircraft battery (see section A.4.5) caused a further reduction in display issues.

A.4.5 AIRCRAFT 28 VDC POWER BUS ADJUSTMENTS.

Problems with aircraft power dropping out were observed during the previous tests. An anomaly was observed during this time:

- The ECB 3 (anti-ice) fault indication via the red LED and the GUI icon—because the ECB detected voltage on the output when in the "Off" state, it was determined that external thermal circuit breakers (CBs) were also supplying voltage to the anti-ice system independently of the smart panel. Power was cycled and the ECB 3 fault condition cleared.

The ground support crew checked out the aircraft's 28 VDC power bus and connected the battery. With the battery disconnected, the 28 VDC is solely provided by transformer/rectifier units feeding off the 115 VAC bus. These units contain minimal filtering, resulting in several volts of 400 Hz ripple on the 28 VDC bus. The FDS display was observed to be interference free. All loads were then powered up with no anomalies. The 28 VDC feed to the smart panel was then cycled and all ECBs came back up with no faults or trips.

A.4.6 THE DC I^2T OVERLOAD TEST.

All ECBs were turned on except for ECB 6. A 2x (0.59 ohm) overload was connected to ECB 6. ECB 6 was then turned on. The ECB 6 tripped in approximately 5 seconds at 29-30A. The ECB 6 LED turned amber, indicating a trip condition, and the GUI indicated the trip icon and overload (see figure A-3).

System voltage = 25 VDC

Voltage drop across resistor load = 19 VDC

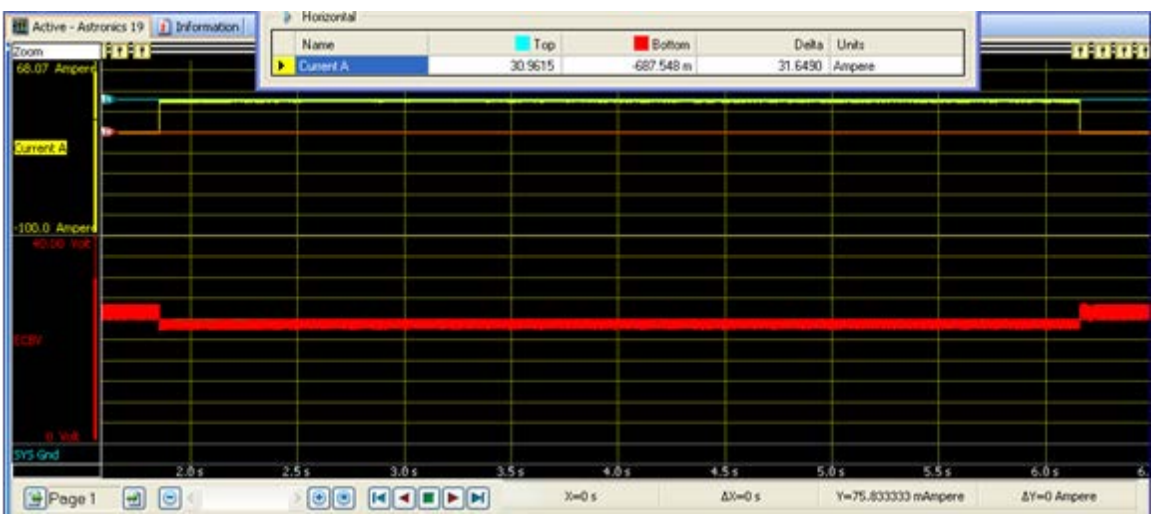

Figure A-3. Scope Trace: Astronics AES 19—2x Overload of ECB 6

A.4.7 THE GUI ACCURACY TEST.

An 80% load (1.8 ohm) was connected to ECB 8; the GUI indication measured 12.7A and 22.9 V across the load. These results were compared to 22.9V/1.8 ohms = 12.7A, which matches the GUI measurement. System voltage remained at 25V during the test. The following anomaly was noted during this test:

- The FDS bezel keys became intermittent in operation. Moving the associated cables, cycling the USB connections, and rebooting the PC did not clear the problem. The bezel keys eventually stopped working completely, so a PC keyboard was installed in place of the bezel keys for the remainder of the on-aircraft testing.

A.4.7.1 COMMENTARY.

Investigation of the smart panel after it was returned to the Astronics facility showed no anomalies with the bezel keys, even after repeated physical impulse shocks and vibrations were manually applied to the unit. The bezel key failure on the aircraft could not be duplicated.

A.8 GROUND POWER UNIT AND AUXILARY POWER UNIT BUS TRANSFERS.

The purpose of this test was to see if multiple bus transfers between the ground power unit (GPU) and the auxiliary power unit (APU) caused any nuisance trips or other anomalies with the smart panel or the ECBUs. All of the DC ECBs were set to a 15A rating and, thus, were loaded too lightly for nuisance trips to occur, so ECB 8 was loaded to 12.7A during the bus transfers. A resistive heater was connected to alternating current (AC) ECB 25 and set to the 1300 watt level, providing a current of 11.2A with an applied voltage of 109.8 VAC. As expected, the ECB 25 tripped when a second heater was connected to it. The second heater was then removed prior to testing.

With all ECBs on, all connected aircraft loads operating, and ECB 8 and ECB 25 resistively loaded to the 80% level as detailed above, eight bus transfers were performed (see figure A-4).

No fault status (red LEDs) indicated at any time, there were no trips or state changes, and no unusual behavior was noted.

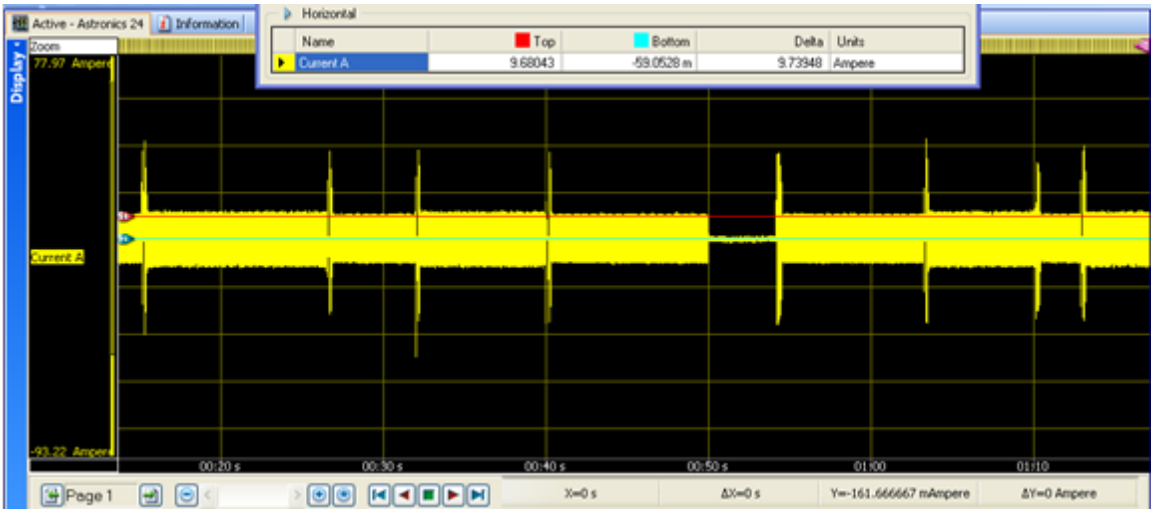

Figure A-4. Scope Trace: Astronics AES 24—GPU to APU Bus Transfers

A.5 ACTIVITIES: THURSDAY, FEBRUARY 9, 2012.

A.5.1 SETUP.

When the smart panel was powered on, the FDS bezel keys were still nonfunctional, so the keyboard was again used for GUI control. While the FAA support team was setting up to run the engines and APU, the three-phase AC ECB 33 (center tank boost pump left) tripped. The following anomalies were then observed:

- Aircraft AC power-cycled and the three-phase ECB 33 faulted.

- There was no output from ECB 33 when turned on, and the GUI showed an output of 6.2 VAC. When the associated external thermal CB was closed, the GUI showed that ECB 33 had 113 VAC on its output. ECB 33 indicated fault (red LED and GUI icon) due to voltage being present on the output when in the "Off" state.

When the associated thermal CB was turned off, the "Fault" state (red LED) cleared, but the GUI still indicated "Fault." When the ECB was selected on the GUI, the "Fault" condition displayed on the GUI cleared.

This was the expected display behavior because the GUI processor continually polls for group status from both ECBUs. The group status response provides "On," "Off," and "Trip" data for all ECBs. The "Fault" status is provided by the individual ECB status command, which is sent only to the ECB selected by the GUI. Thus, the "Fault" status will not clear until the ECB is selected on the GUI. The output of 6.2 VAC is the expected value on the output when the field effect transistors (FET) are functional, but turned off. This is due to the capacitance from input to output and FET leakage.

A.5.2 COMMENTARY.

The 115 VAC input to all three phases of the input connector block of the AC ECBU was verified at the aircraft. The FAA support team remarked on having had trouble bringing up the pump in the past. Investigation of the smart panel after it was returned to the Astronics facility confirmed that ECB 33 did not function. A full inspection of the wiring showed that the power feed terminal on the Phase C input to the AC ECBU was firmly clamped to the insulation on the feed wire, causing a temperature-sensitive power-feed interruption. This was corrected and ECB33 operated normally with a test load.

A.5.3 THE GPU, APU, AND ENGINE GENERATOR BUS TRANSFERS.

The purpose of this test was to see if multiple bus transfers between the GPU, the APU, and the engine-mounted generator caused any nuisance trips or other anomalies with the smart panel or the ECBUs. All of the DC ECBs were set to a 15A rating and, thus, were loaded too lightly for nuisance trips to occur, so ECB 8 was loaded to 12.7A during the bus transfers. A resistive heater was connected to AC ECB 25 and set to the 1300 watt level, providing a current of 11.2A, with an applied voltage of 109.8 VAC. The ECB 25 tripped as expected when a second heater

was connected to it. The second heater was then removed prior to testing. With all ECBs on, all connected aircraft loads operating, and ECB 8 and ECB 25 resistively loaded to the 80% level as detailed above, eight bus transfers were performed (see figure A-5). No fault status (red LEDs) indicated at any time, there were no trips or state changes, and no unusual behavior was noted.

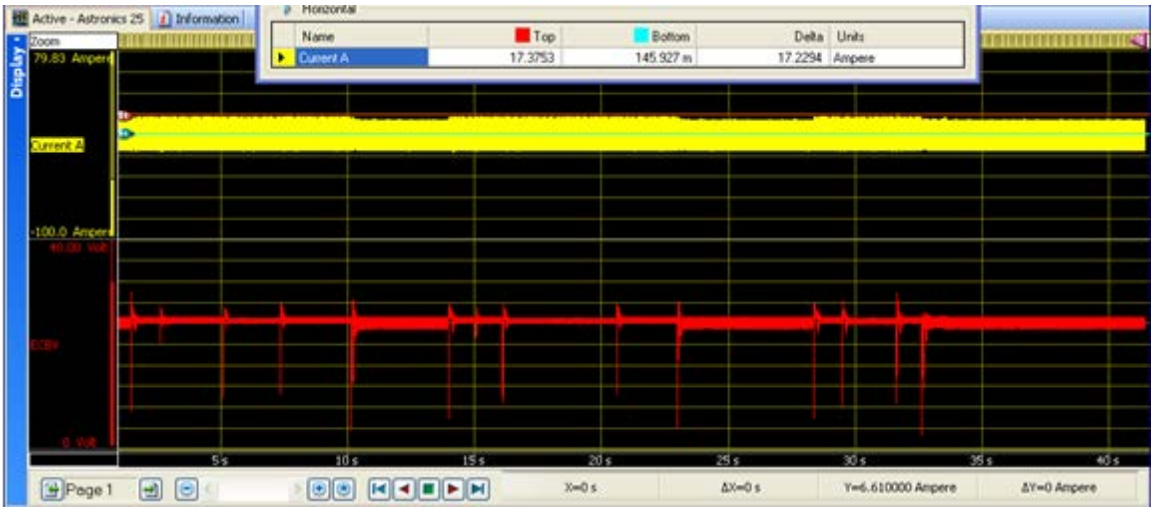

Figure A-5. Scope Trace: Astronics AES 25—Bus Transfers AC Resistive Heater Current, 28 VDC Bus Bar

A.5.4 AIRCRAFT LOAD POWER CYCLING TESTS.

The aircraft loads connected to the smart panel were then cycled, switched, or controlled as appropriate to each load. During this test, an anomaly was detected with ECB 18, connected to the light dimmer and test function of the fire suppression system. ECB 18 tripped during the test function (see figure A-6). It was determined that the trip was occurring during step three of the dim test sequence:

- Step one—lights flash
- Step two—bell rings
- Step three—squib fire circuit self-tests

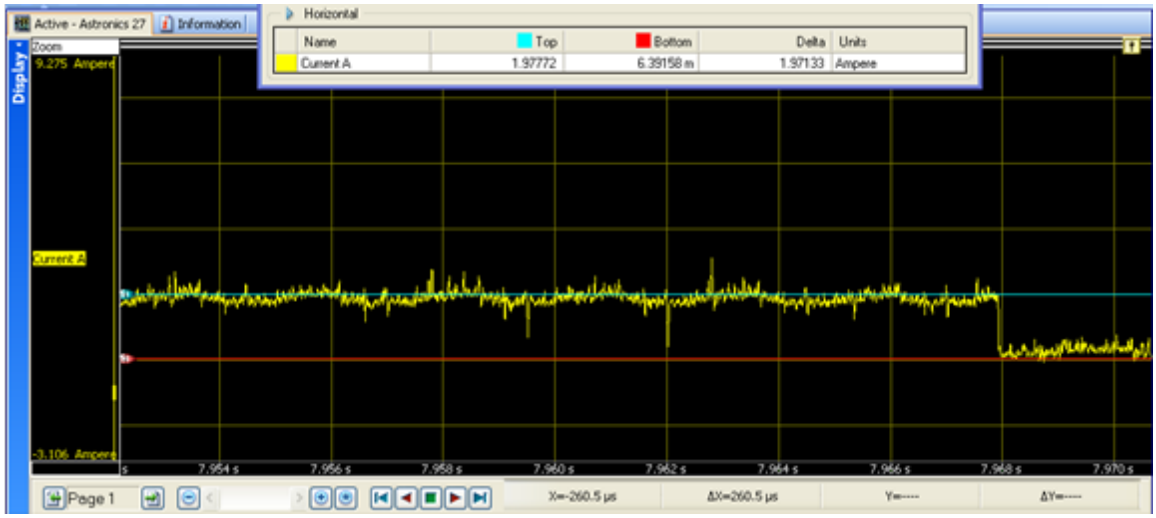

Figure A-6. Scope Trace: Astronics AES 27—Monitoring ECB 18 Shows Trip

To investigate this problem, the loads on ECB 8 and ECB 18 were swapped:

- ECB 8 (TB1-4) is now dim test (terminal 22; see figure A-7).
- ECB 18 (TB1-9) is now load resistors.

When the three-step test from the cockpit was repeated, neither ECB tripped.

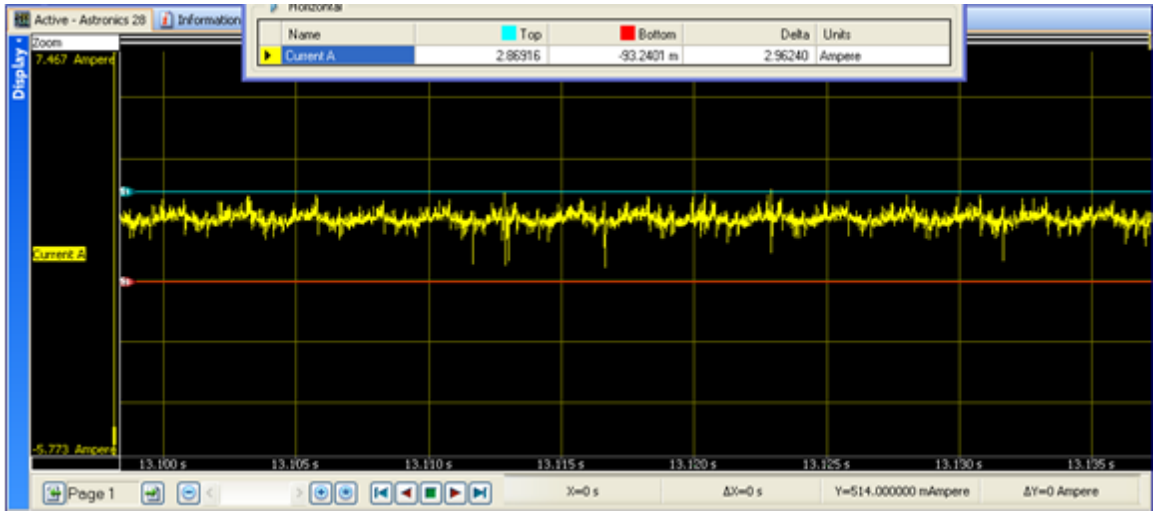

Figure A-7. Scope Trace: Astronics AES 28—Dim Test Using ECB 8

A.5.5 COMMENTARY.

The ECB 8, when tripped on the dim test circuit self-test activation, indicated an overload on the GUI. No overload was seen in the current waveform. The speculation was that ECB 18 was tripped by series arc detection. The waveform shows the periodic and random dropouts that are

the hallmark of series arcs on both traces. Because both ECBs had the same software and one did not trip, further investigation is required. An indication of series arc detection has been added to the GUI.

A.6 SERIES ARC FAULT TESTS.

The wire connected to the ECB 8, connected to the dim test load, was loosened and manually vibrated to produce series arcs. No trip resulted, possibly due to the low current of this load (see figure A-8). The scope voltage probe ground was moved to the ground strap and ECB 18, connected to an 80% resistive load, was manually vibrated to produce series arcs (see figure A-9).

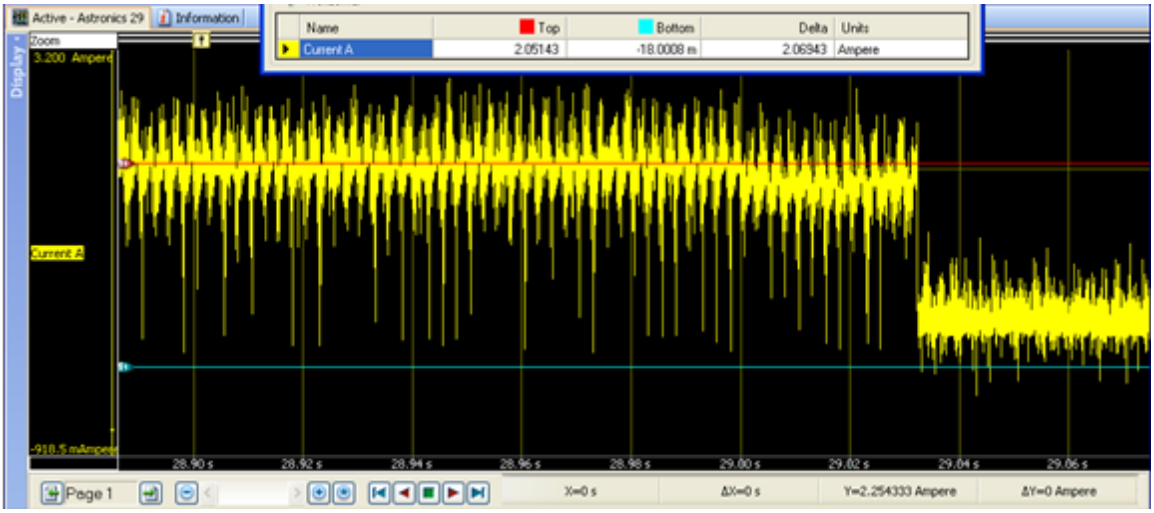

Figure A-8. Scope Trace: Astronics AES 29, Manually Wiggled Loose Connection on ECB 8—No Trip (turned off manually)

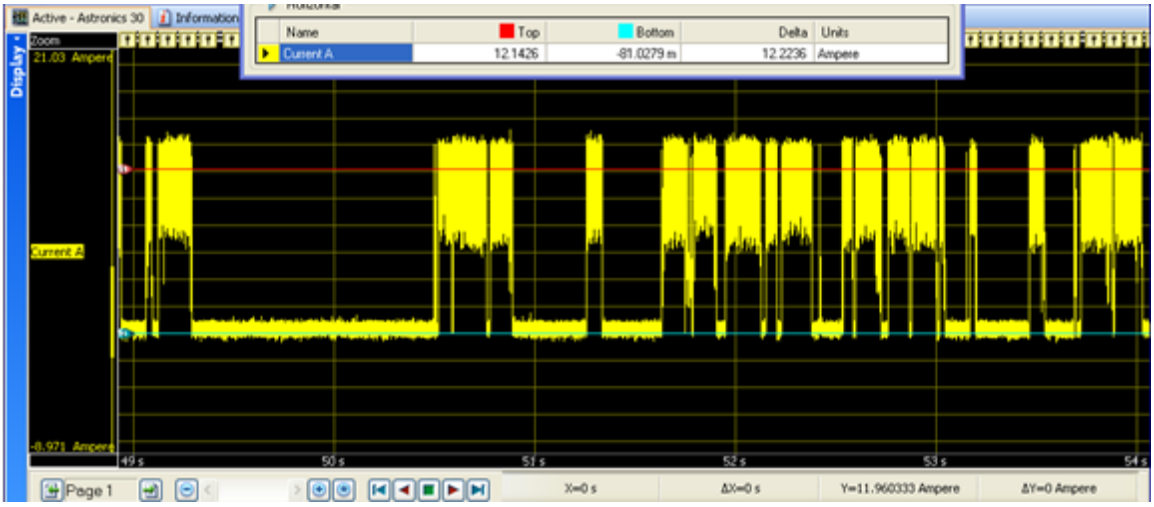

Figure A-9. Scope Trace: Astronics AES 30, Manually Wiggled Loose Connection on ECB 18—No Trip

The current probe was then moved to ECB 4 (terminal 16, first officer pitot/static). This ECB was used for series arc fault testing at Astronics AES prior to being shipped to the FAA. This was tested both manually and with a loose terminal vibration test fixture (see figures A-10 and A-11).

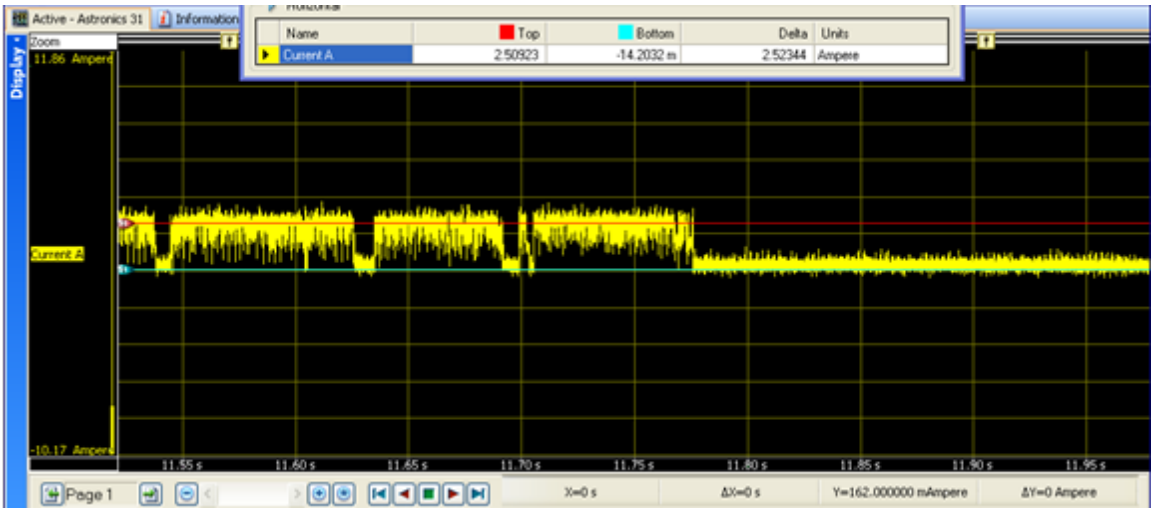

Figure A-10. Scope Trace: Astronics AES 31, Hand Wiggling on ECB 4—Trip

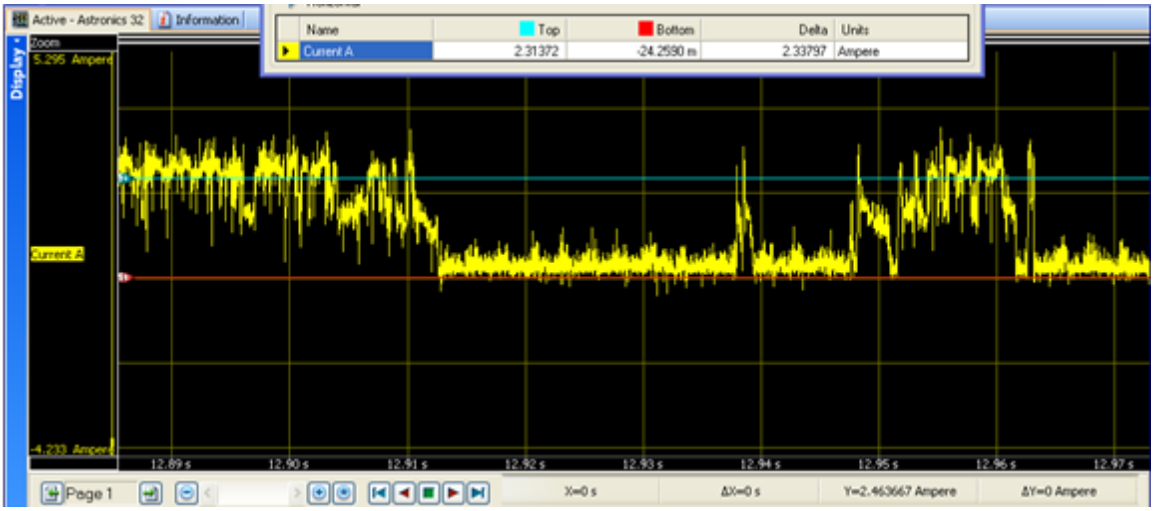

Figure A-11. Scope Trace: Astronics AES 32, Vibration Fixture on ECB 4—Trip

The vibration fixture was then placed on ECB 18 (TB1-9) and connected to a 2.5A resistive load. ECB 4 (TB1-2) was reconnected to terminal 16. The vibration fixture was run and ECB 18 did trip (see figures A-12 through A-14).

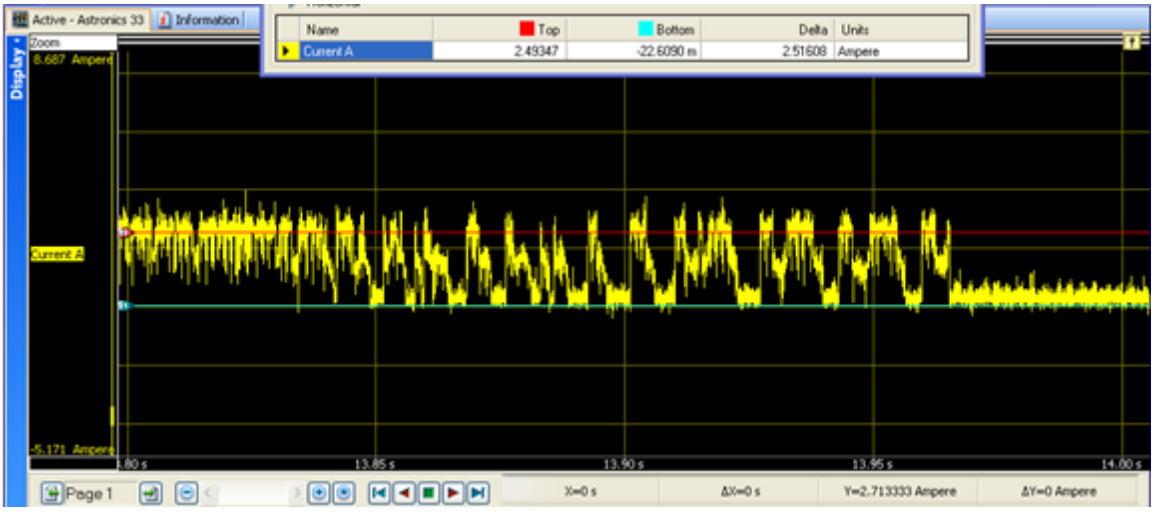

Figure A-12. Scope Trace: Astronics AES 33, Vibration Fixture on ECB18—Trip

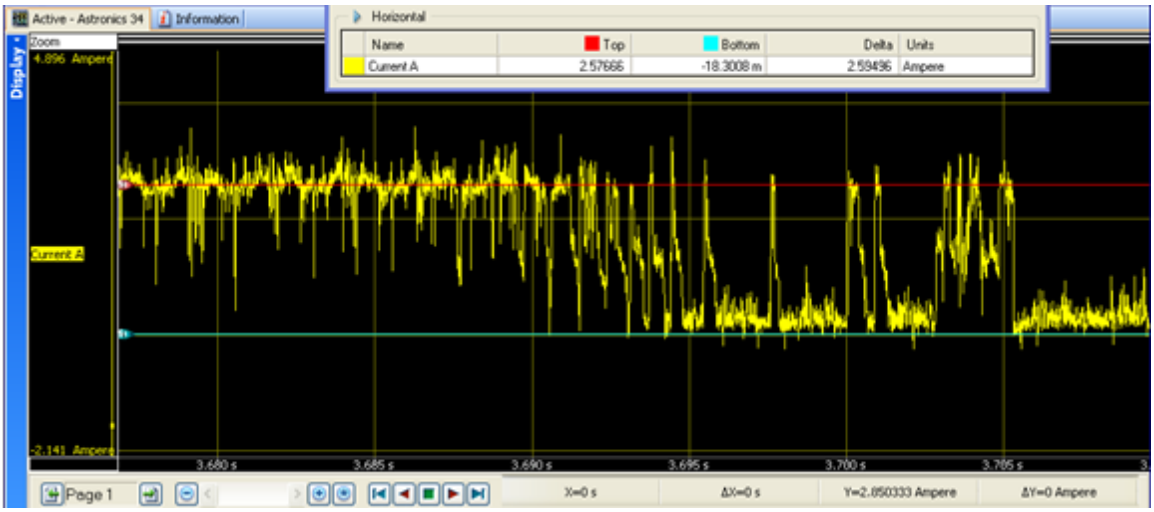

Figure A-13. Scope Trace: Astronics AES 34, Hand Wiggling on ECB 18—Trip

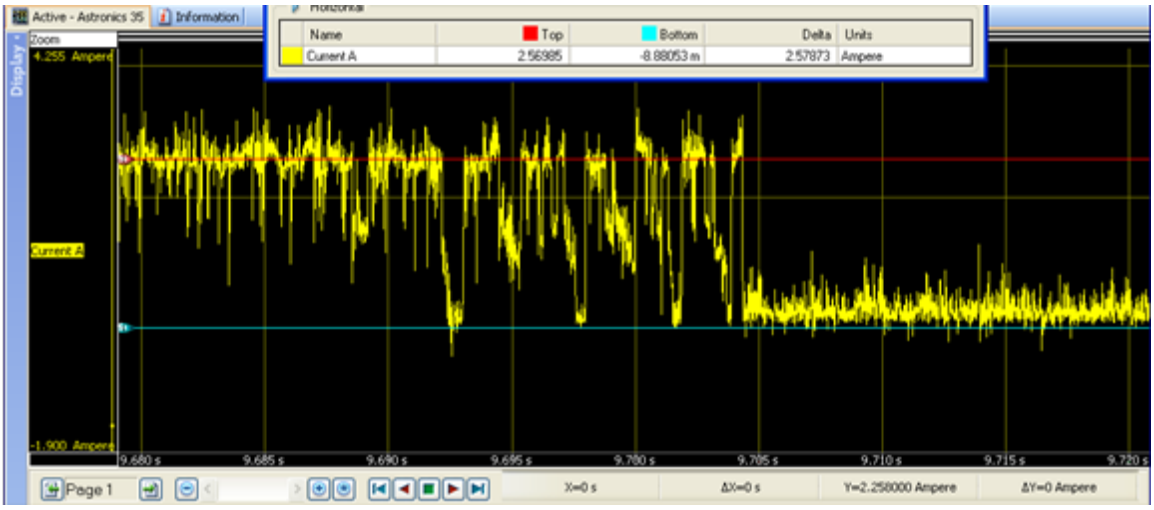

Figure A-14. Scope Trace: Astronics AES 35, Slow Hand Wiggling, Then Fast Up/Down Along Screw Threads on ECB18—Trip

A.6.1 COMMENTARY.

The lack of detection of series arc faults on ECB 8 was interesting, as was the initial failure, then success, of the detection algorithm on ECB 18 (ECB 18 also tripped consistently on the dim test load when a self-test was initiated on that load). Further analysis of the current traces must be done to see if the algorithm needs to be adjusted. The series arc is a normal part of the operation of brushed motors and the algorithm works by looking for current dropouts that do not have a relatively constant frequency. The small shaker table, and even hand wiggling, can easily produce a relatively constant frequency of interruption. Figure A-15 shows a comparison of the manually created series fault waveforms Astronics AES 30 (no trip) and 34 (trip).

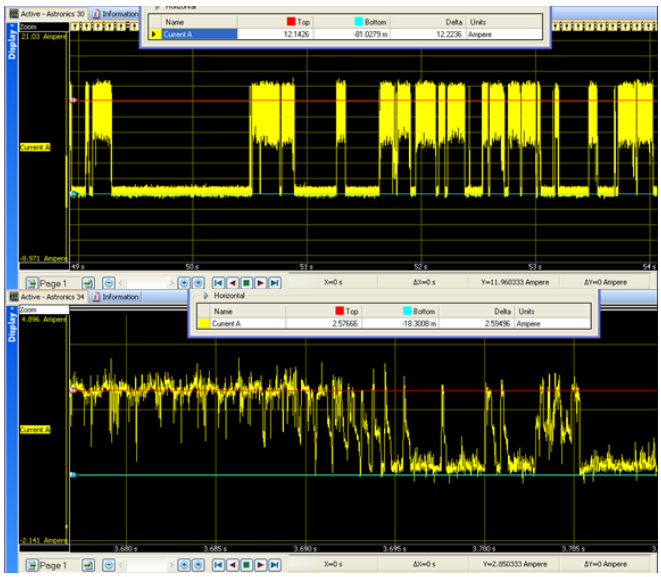

Figure A-15. Series Arcing Waveforms

Both waveforms show little periodicity. Aside from the large current difference, the major difference was in the duration of the dropouts. The software window is only 20 ms long at present, so it is not surprising that arcs were not detected in waveform 30. There are many adjustable parameters built into the software and further research is required to determine what they should be to minimize nuisance faults. A key point is that the normal behavior of the loads can be used to set up these parameters.

A.7 THE DC PARALLEL ARC FAULT TEST.

ECB 18 was connected to a 2A resistive load. The output of ECB 18 was then intermittently grounded with a 2-foot length of 24-gage wire to the main ground strap. ECB 18 tripped immediately. The GUI indicated "Fault" (see figures A-16 and A-17).

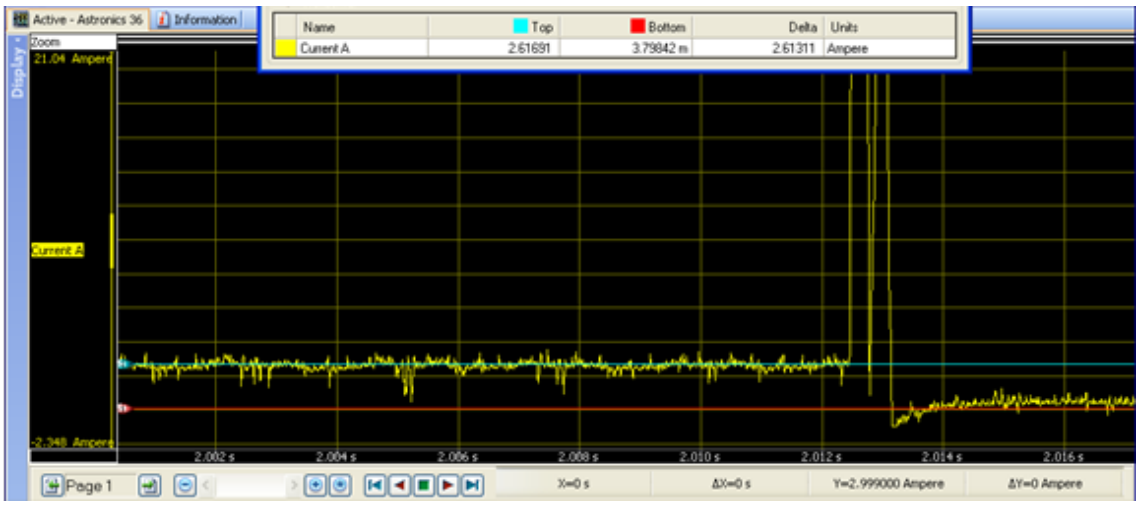

Figure A-16. Scope Trace: Astronics AES 36, ECB 18 Parallel Arc Fault

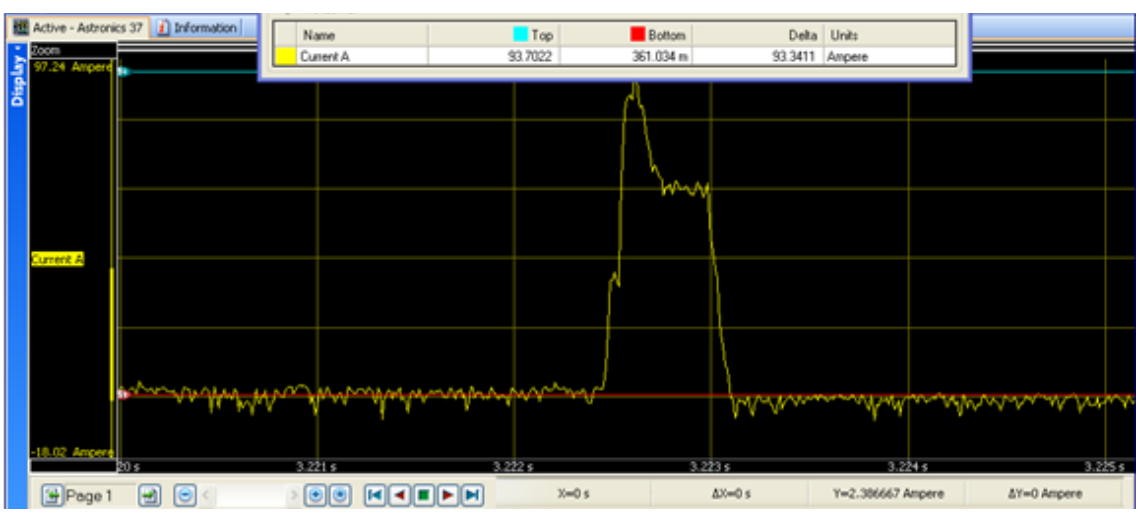

Figure A-17. Scope Trace: Astronics AES 37, ECB 18 Parallel Arc Fault

An intermittent short using a 2-foot length of 24-gage wire was then manually placed directly across the load. The ECB did not trip, but the wire insulation melted after about 15 seconds of manually generated arcing (see figures A-18 and A-19). The intermittent short was then reapplied from the load to ground strap. The ECB tripped immediately (see figure A-20).

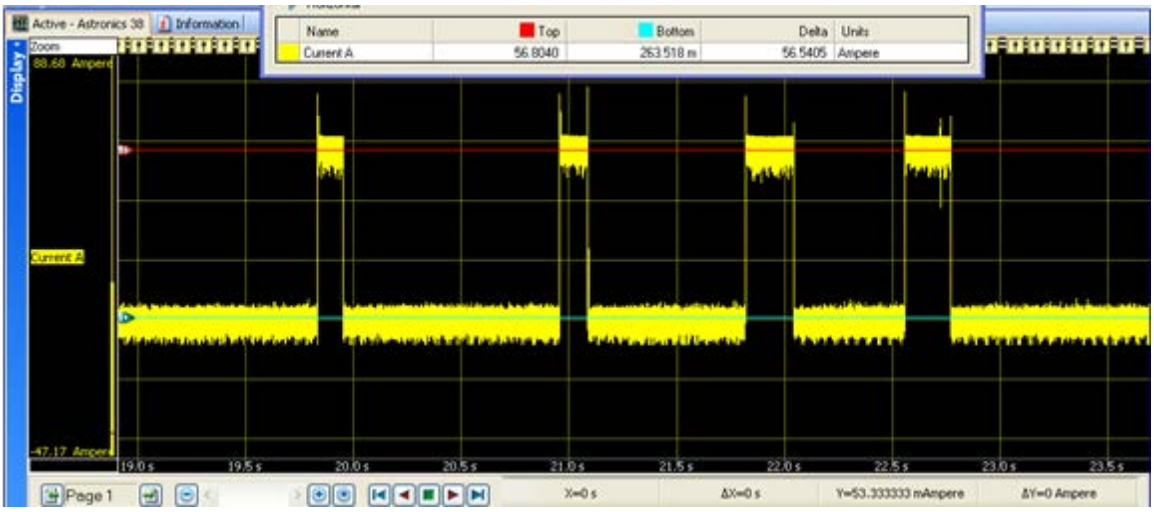

Figure A-18. Scope Trace: Astronics AES38, ECB 18—Did Not Trip

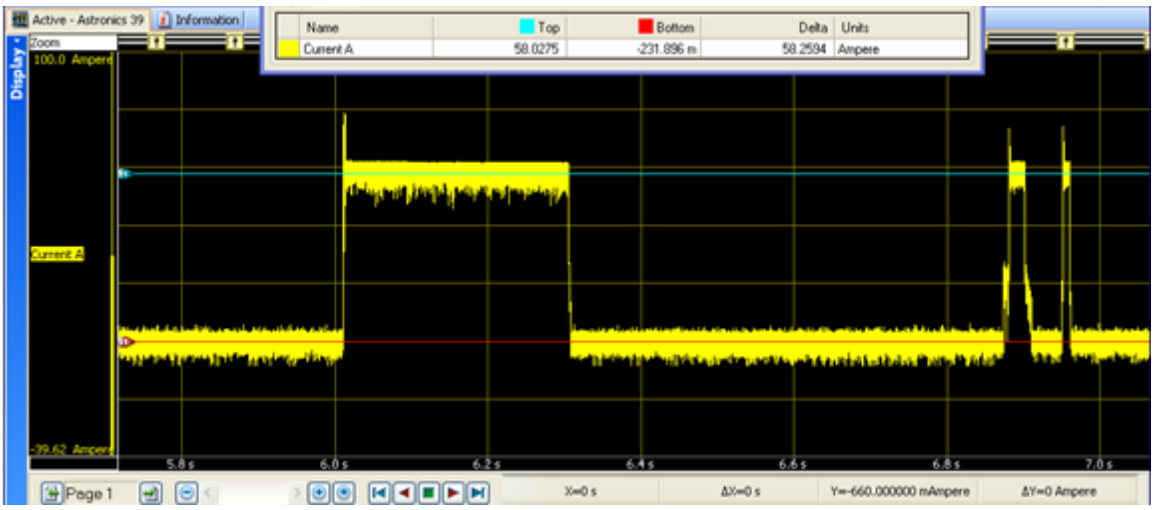

Figure A-19. Scope Trace: Astronics AES 39, ECB 18—Did Not Trip

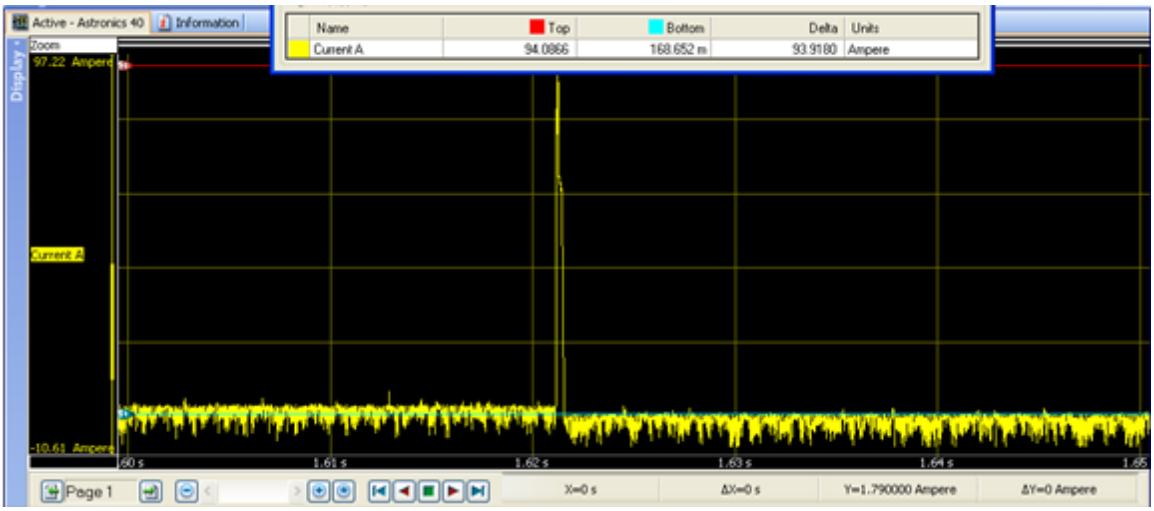

Figure A-20. Scope Trace: Astronics AES 40, ECB 18 Parallel Arc Fault

A.7.1 COMMENTARY.

The DC ECB detected an arcing short-to-air frame, but not directly across the load. The advanced arc fault algorithm that was developed and successfully tested earlier in this program and not implemented in the test software is required to detect this lower level activity. It should also be noted that this was a 15A breaker and the low-level arc fault currents shown in Astronics AES 38 and 39 were well within the I^2t curve limits.

A.8 THE AC OVERLOAD AND PARALLEL ARC FAULT TESTING.

A resistive load was applied to ECB 25, drawing 10A. A second load was applied in parallel to stimulate an overcurrent (see figure A-21).

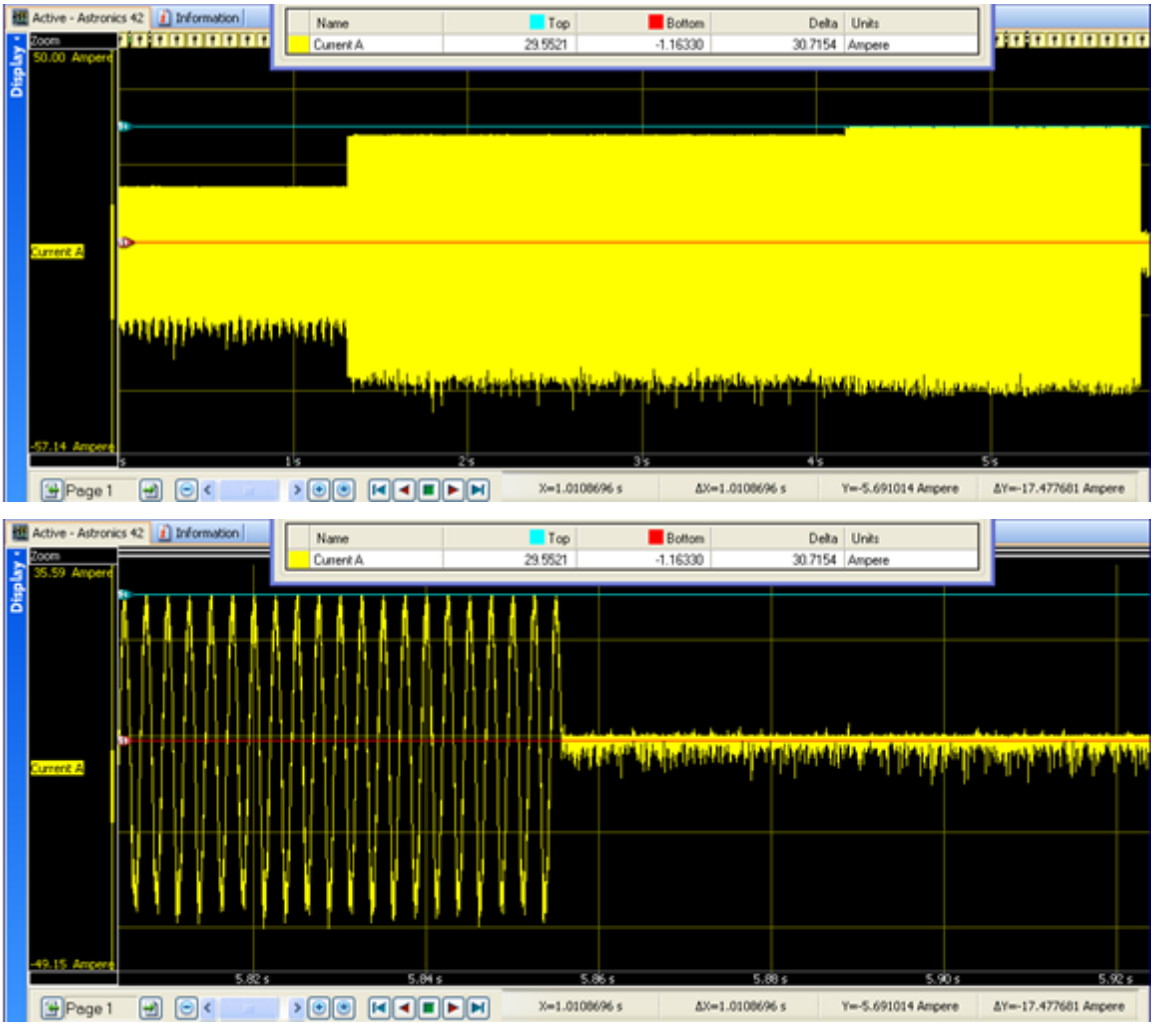

Figure A-21. Scope Trace: Astronics AES 42, Turning on Second Heater in Steps

A 2-foot length of 24-gage wire was connected to the aircraft frame and intermittently connected to the output of ECB 25 at the load input. ECB 25 tripped and the GUI indicated "Short" (see figures A-22 and A-23).

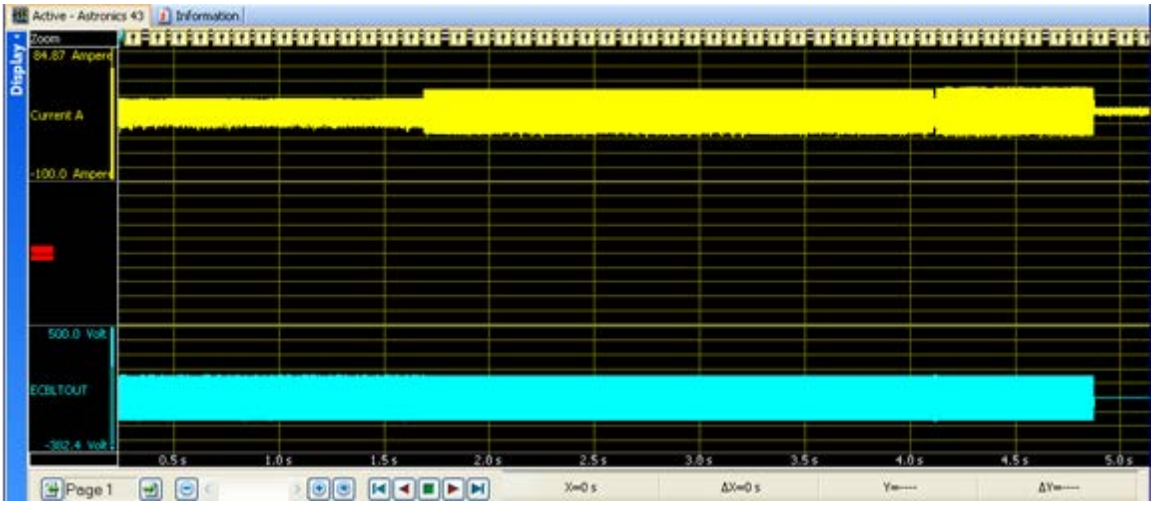

Figure A-22. Scope Trace: Astronics AES 43, ECB 25 Tripped Because of Overload

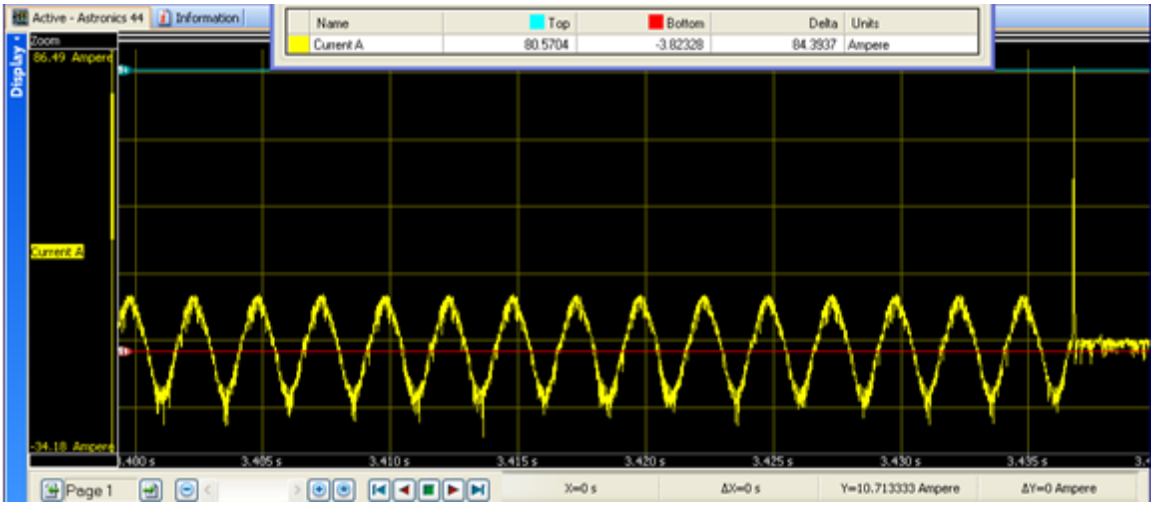

Figure A-23. Scope Trace: Astronics AES 44, ECB 25 Tripped (not on zero cross)

A.9 POSTTESTING AND MODIFICATIONS AT ASTRONICS AES.

A.9.1 OVERVIEW.

The smart panel was shipped to Astronics AES on completion of testing for failure analysis and software modifications at the FAA Technical Center. The issues of concern were power supply noise susceptibility and distinguishing between series arc fault and overload trips.

A.9.2 NOISY POWER SUPPLY SUSCEPTIBILITY.

A.9.2.1 PROBLEM STATEMENT.

The FDS monitor displayed a cross-hatching interference pattern and the bezel keys would not operate with power supplied from a noisy aircraft bus (with ground power and batteries disconnected).

A.9.2.2 TESTING AND ANALYSIS.

An Agilent 33220A function generator powering an AE Techron power amplifier was used to create a 26 VDC supply voltage with a 400 Hz ripple to simulate power conditions on board the aircraft when the batteries were not connected to the power bus.

This test voltage was connected to the 28 VDC input to the smart panel, which supplies the ECBUs, the controller, and the display (the Stealth PC is powered independently by standard 115 VAC 60 Hz).

Peak-to-peak ripple voltages of 5, 8, and 10 volts were applied. The ripple was applied so the peak value of the overall waveform was always 26 volts.

The smart panel operated normally throughout testing. The bezel switches operated properly and no cross-hatching was observed on the display.

A.9.2.3 CONCLUSIONS.

The previously observed effects of the noisy aircraft bus could not be duplicated using the Astronics AES test setup with simulated aircraft bus. It is recommended to ensure the batteries are connected to the power bus (standard configuration) when operating the smart panel onboard the aircraft. Any future implementations of the smart panel should contain power conditioning circuits.

A.10 SERIES ARC FAULT AND OVERLOAD ANNUNCIATION.

A.10.1 PROBLEM STATEMENT.

The GUI could not distinguish between series arc fault and overload trips.

A.10.2 TESTING AND ANALYSIS.

A Microchip MPLAB® Integrated Development Suite running on a PC with an ICD2 interface module was connected to the programming port of the DC ECBU's main processor. The development system was placed in debug mode to aid in the analysis of the embedded code structure and the data transfers between the main processor and individual ECBs.

The "ECB Individual Status Response" message on the ECBU's internal serial bus provides individual status from an ECB to the main processor. Testing and analysis revealed that the series arc fault bit in the response message never clears once it has been set. With the bit always set, it cannot be used to distinguish between series arc fault and overload trips.

Further testing and analysis revealed that two additional bytes containing arc fault debugging data had been added to the standard ECB Individual Status Response message. The main processor code was modified to pass these bytes on to the GUI. By performing a series of arc fault and overload tests, a distinct and repeatable pattern was found.

The GUI was modified to display "Series," "Arc," or "Overload" based on the content of the debug bytes rather than the original arc fault bit.

Tests were performed on ECBs #2 and #4, both rated at 15A. The vibration fixture in series with a 3.5A load was used to generate series arc fault conditions. Load resistors were used to create overload (28A) conditions.

A.10.3 CONCLUSIONS.

With the software modifications to the main processor and GUI, the GUI properly distinguishes between "Series," "Arc," and "Overload" trips.

A.11 SUMMARY OF SMART PANEL LIMITATIONS.

A.11.1 NOISY POWER SUPPLY SUSCEPTIBILITY.

The aircraft batteries must be connected to the bus to reduce noise and transients.

A.11.2 PARALLEL ARC FAULT ANNUNCIATION.

The advanced parallel arc fault algorithm was developed and successfully tested earlier in this program, but is not implemented in the present ECB software because of program memory size constraints. As a result, the GUI will not display "Parallel Arc" as a trip option.

A.12 DISCUSSION AND CONCLUSIONS.

A.12.1 THE GUI.

The GUI functioned mostly as intended, but the commercial aircraft grade display FDS and Stealth computer showed a major susceptibility to 28V line ripple, which had not been observed in the laboratory under worst case MIL-STD-704A power conditions. It was also noted that the fixed scale of the current display should probably auto-range to match the measured current. Similarly, the resolution of the current display is adequate for higher level currents, but not for accurate measurements of currents under 10% of the CB rating. The intermittent operation of the bezel buttons is also a major problem, probably indicating a connection issue in the assembly.

The GUI performed well in certain respects, showing improved response time and an easier user interface. The quality of the display itself is questionable. Further work on the display is required to reach the level needed for flight-critical power control.

A.12.2 SMART PANEL.

The smart panel also showed a susceptibility to line noise. Even though the noise was greater than that allowed by MIL-STD-704, the fact that it happened shows that greater attention must be paid to the control power supplies.

The smart panel performed well, with a good response time and easy operation. This particular implementation used a pull switch to prevent inadvertent operation (bumping). Other actuation methods should be explored, such as a housed push switch.

A.12.3 THE DC ECBU.

A.12.3.1 OPERATION AND OVERLOAD.

The DC ECBU performed as expected for general operation and overload trip. No changes were deemed necessary to the basic CB operation.

A.12.3.2 PARALLEL AND SERIES ARC DETECTION.

Parallel arcs were detected only at a high level, as the experimental software was not installed because of code space and speed limitations in the ECB microprocessor. This software was laboratory tested and showed the capability to detect the low-level arcs created by high impedance faults.

The experimental series arc software was installed and did detect series arcs within its design limits. The question is as to what those limits should be. There was a consistent false trip with one CB, which did not trip easily when tested with larger loads and different waveforms. Laboratory testing with a variety of loads showed that the algorithm ignored sparking motors, but tripped on the SAE International test rig.

For arc detection in general, the ability to pass the SAE International tests does not guarantee the suitability of the design for an actual aircraft. We saw an example of a waveform that tripped the series arc detection, even though the detection algorithm passed the laboratory testing with a wide variety of test loads. The obvious conclusion is that the variety of possible load waveforms in an aircraft will always exceed the variety captured for analysis and testing. False trips are a major problem, causing distrust of the arc fault circuit breaker and the dismissal of a possible hazardous situation as a false trip. We have been focused on a generic approach, and it is becoming obvious that this approach will not really fit anything well.

The probable solution rests on the fact that a properly operating load will exhibit a repeatable characteristic that changes slowly, if at all, over time. Many of the time-induced changes are actually indicative of load or wiring problems developing. The use of a microprocessor to drive

the ECB allows us to have the ECB customize itself to the load, to a flexible degree. At the most basic, the algorithm can be easily adjusted for the worst-case normal of each load in each type of aircraft. At best, the ECB can learn what constitutes a valid load waveform and can annunciate a pending wiring or load situation before reaching a hazardous state requiring a trip.

A.12.4 THE AC ECBU.

The AC ECBU performed as expected for general operation and overload trip.

No changes were deemed necessary to basic CB operation.

A.12.4.1 PARALLEL ARC DETECTION.

Parallel arcs were detected only at a high level, as the experimental software was not installed because of code space and speed limitations in the ECB microprocessor. This software was laboratory tested and showed the ability to detect the low-level arcs created by high-impedance faults.

For conclusions, see the discussion on DC series arcs in section A.6.1. The same comments apply.

A.13 TEST PROCEDURE.

A.13.1 PURPOSE OF THE TEST.

The primary goal of the test was to prove that the ECBUs and the smart panel control system can function without anomalies in a typical aircraft environment with actual aircraft loads, power sources, and wiring. Typical aircraft environment issues include:

- Aircraft power bus noise
    - Generator-caused noise
    - Load-caused noise
    - Bad connection-vibration-caused noise
- Aircraft radiated fields
- Bus switching and transfer transients
- Load characteristics
    - Negative resistance from active loads
    - Inrush surge
    - Power factor

A secondary goal was to verify the trip curves and arc fault detection capability of the ECB. Trip curves can be roughly tested on the aircraft as a confidence builder, but are much easier to accurately measure in the laboratory. Arc faults are also easier to produce and measure in the

laboratory, but on-aircraft testing will serve to validate the detection capability and susceptibility to false trips of the ECBs.

A.13.2 SETUP OF THE TEST.

The smart panel and ECBUs will be installed in the galley compartment of the test aircraft, a Boeing 737. A panel and an enclosure have been created that will fit in the storage space shown in figure A-24.

Figure A-24. Smart Panel Location on FAA 737

A.13.2.1 BUS CONNECTIONS.

Bus inputs for the AC and DC buses will be connected to the power panel feeds that exist in the thermal CB panels on the other side of the galley wall. Different buses may be used at different times and for different tests, according to the investigators.

A.13.2.2 LOAD CONNECTIONS.

Loads are to be chosen based on a ccessibility and on di versity of load type. Loads are enumerated in figure A-1. Different loads may be used at different times and for different tests, according to the investigators.

A.13.3 THE DC ECBU TESTS.

The DC ECBU tests will consist of CBs at 15A and CBS at other program ratings.

A.13.3.1 The DC Normal Systems Operation Test.

Various loads will be manually turned on and off with the smart panel. The loads will be selected at the time of test to provide as many different types of loads as possible. Generally speaking, the worst-case surge load is an incandescent lamp, followed by a single-phase capacitive start motor, so these types of loads will be tested. A power supply-type load, such as a multifunction display unit (MFDU) or other electronic system, will also be tested.

A.13.4 TEST PROCEDURE.

1. Turn each connected load on and off, with all other loads off, while observing smart panel and GUI detail display. Use both GUI and smart panel to cycle the load. Completed; see sections 2.1 and 4.3.

2. Turn each connected load on and off with all other loads on while observing smart panel and GUI detail display. Use both GUI and smart panel to cycle the load. Completed; see section 4.3.

3. Turn all loads on and cycle/transfer the bus power at least five times. Observe smart panel and GUI display. Completed; see sections 3.6 and 4.2.

A.13.5 TEST SUCCESS CRITERIA—SEE REPORT NOTES FOR ANOMOLIES AND DISCUSSION.

- No false (nuisance) trips
- No unusual behavior when operating the CBs
  - No bouncing
  - Must come on without bounce
  - Must turn off without bounce
  - No interactions between individual CBs
  - Status indications on GUI and panel must match
  - Voltage and current shown on GUI for each load must be within ±10% of actual readings
- No unusual operation during bus transients
  - No bouncing or flashing
  - Previous state must be restored after transient

A.13.6 THE DC I^2T OVERLOAD TRIP TEST.

Overloads will be simulated on at least one CB to determine trip curve accuracy to be equal to or better than a thermal CB. Overloads of 2x (10s trip) and 3x (2s trip) will be created (see figure A-25).

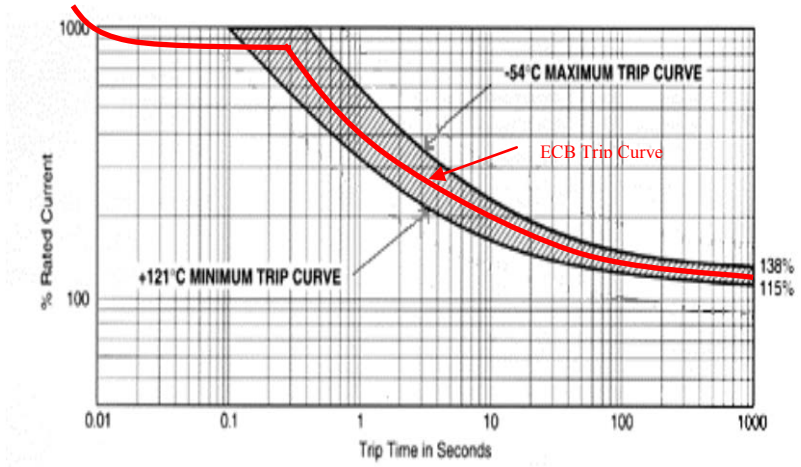

Figure A-25. Thermal CB I^2t Trip Curve

A.13.6.1 TEST PROCEDURE.

With all loads on, use a resistor bank or other load to quickly increase the load to the 3x trip level while observing smart panel and GUI detail display. Not completed on aircraft. Direct shorts across load created only 58A. See Astronics AES 39. An overload trip resulted from this test, but was not timed and not caught on scope.

With all other loads on and the device under test (DUT) off, use a resistor bank or other load to increase the load to the 3x trip level. Observing the smart panel and the GUI, turn on the DUT. Not completed on aircraft. Direct shorts across load created only 56A.

With all loads on, use a resistor bank or other load to quickly increase the load to the 2x trip level while observing smart panel and GUI detail display.

With all other loads on and the DUT off, use a resistor bank or other load to increase the load to the 2x trip level; then, observing the smart panel and the GUI, turn on the DUT.

A.13.6.2 TEST SUCCESS CRITERIA.

- Successful trip with overload applied during operation
  - Trip within trip curve limits
  - No anomalous operation of other CBs or the smart panel
  - GUI and panel indicate I^2t trip

- Successful trip with overload in place at turn-on

  - Trip within trip curve limits
  - No anomalous operation of other CBs or the smart panel
  - GUI and panel indicate I^2t trip

In all cases, no damage to the ECB or to the power source is permitted.

A.13.7 THE DC HARD FAULT TEST.

Hard faults will be simulated on at least one load within the limits of the test aircraft system. The power source capacity of the 737 power generation system was approximately 800 amps (continuous DC current capability for all circuit breaker ratings). This included the generator source impedance and all connecting wires resistance.

A.13.7.1 TEST PROCEDURE.

With all loads on, use a shorting link or similar to quickly short the load while observing smart panel and GUI detail display.

With all other loads on and the DUT off, use a shorting link or similar to short the load; then, observing the smart panel and the GUI, turn on the DUT.

A.13.7.2 TEST SUCCESS CRITERIA.

- Successful trip with short applied during operation

  - Trip within 1ms

  - No anomalous operation of other CBs or the smart panel

  - GUI and panel indicate arc fault trip (note: software does not distinguish between hard faults and arcs at this time)

- Successful trip with short in place at turn-on

  - Trip within 10 ms

  - No anomalous operation of other CBs or the smart panel

  - GUI and panel indicate arc fault trip (note: software does not distinguish between hard faults and arcs at this time)

In all cases, no damage to the ECB or to the power source is permitted.

A.13.8 THE DC OUTPUT TO GROUND PARALLEL ARC FAULTS.

Parallel arc faults will be generated on at least one load using the circuit shown in figure A-26.

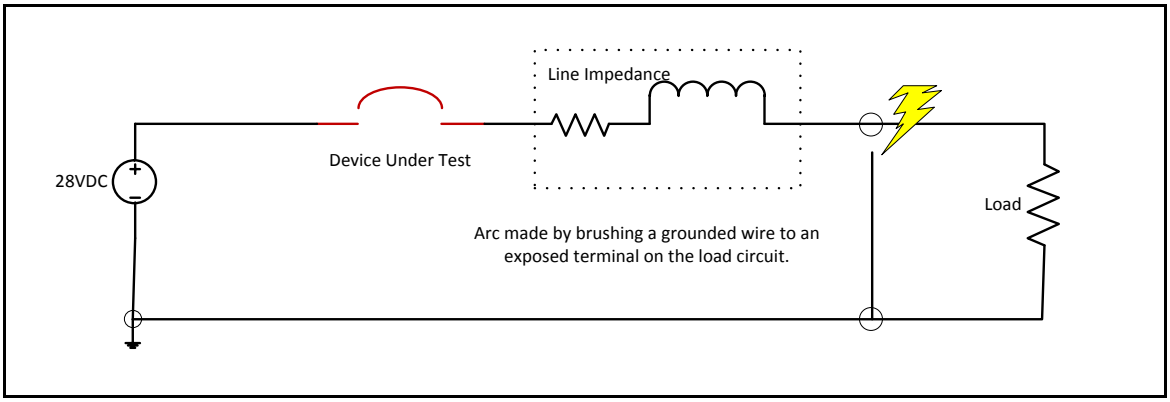

Figure A-26. The DC Parallel Arc Fault Test Circuit

A.13.8.1 Test Procedure.

With all loads on, use a grounded wire or similar to create an arcing fault across the load while observing smart panel and GUI detail display.

A.13.8.2 Test Success Criteria.

- Successful trip with fault applied during operation
  - Trip within 20ms
  - No anomalous operation of other ECBs or of the smart panel
  - The GUI and panel indicate arc fault trip (note: software does not distinguish between hard faults and arcs at this time)

In all cases, no damage to the ECB or to the power source is permitted.

A.13.9 THE DC SERIES ARC FAULTS.

Series arc faults will be generated on at least one load using the circuit shown in figure A-27.

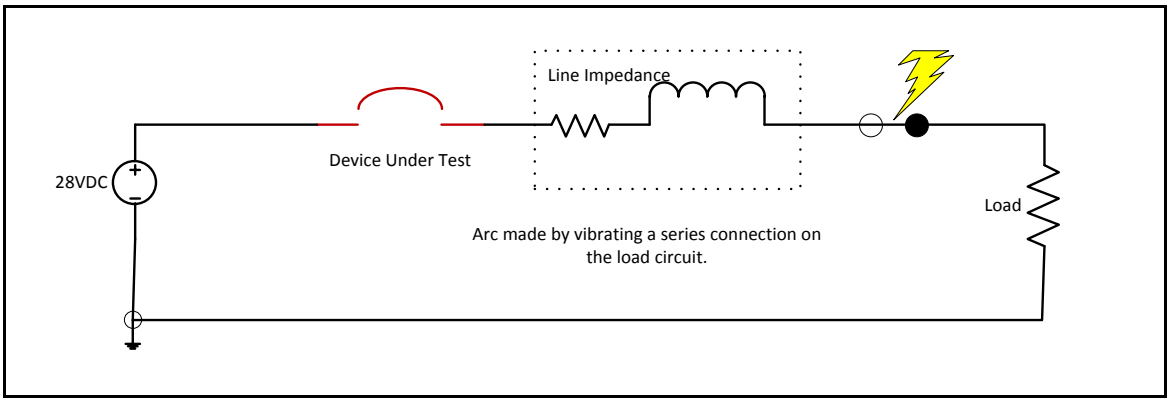

Figure A-27. The DC Series Arc Fault Test Circuit

A.13.9.1 Test Procedure.

With all loads on, use a vibrating loose terminal or similar intermittent series connection to quickly interrupt and reconnect the load while observing smart panel and GUI detail display.

A.13.9.2 Test Success Criteria.

- Successful trip with fault applied during operation
  - Trip within 20 ms
  - No anomalous operation of other ECBs or of the smart panel
  - The GUI and panel indicate arc fault trip (note: software does not distinguish between hard faults and arcs at this time)

In all cases, no damage to the ECB or to the power source is permitted.

A.13.10 THE AC ECBU TESTS.

The AC ECBU tests will consist of nine CBs at 15A each. Three of the CBs will be connected as a three-phase breaker; the remaining six will be configured as single-phase CBs. There will be two individual CBs on each input phase. The power source will be 115V, 400 Hz nominal.

A.13.10.1 THE AC NORMAL SYSTEMS OPERATION TEST.

Various loads will be manually turned on and off with the smart panel. The loads will be selected at the time of the test to provide as many different types of loads as possible. Generally speaking, the worst-case surge load is an incandescent lamp, followed by a single-phase capacitive start motor, so these types of loads will be tested. A power supply-type load, such as an MFDU or other electronic system, will also be tested.

A.13.10.1.1 Test Procedure.

Turn each connected load on and off with all other loads off while observing smart panel and GUI detail display. Use both GUI and smart panel to cycle the load.

Turn each connected load on and off with all other loads on while observing smart panel and GUI detail display. Use both GUI and smart panel to cycle the load.

Turn all loads on and cycle/transfer the bus power at least five times. Observe smart panel and GUI display.

A.13.10.2 Test Success Criteria.

- No false ("nuisance") trips
- No unusual operation
  - No bouncing
  - Must come on at zero crossing
  - Must turn off at zero crossing
- No interactions between individual CBs
- Status indications on GUI and panel must match
- Voltage and current shown on GUI for each load must be within ±10% of actual readings
- No unusual operation during bus transients
  - No bouncing or flashing
  - Previous state must be restored after transient

A.13.11 AC I^2T OVERLOAD TRIP TEST.

Overloads will be simulated to determine if trip curve accuracy is equal to or better than a thermal CB (see figure A-28). Overloads of 2x (10s trip) and 3x (2s trip) will be created.

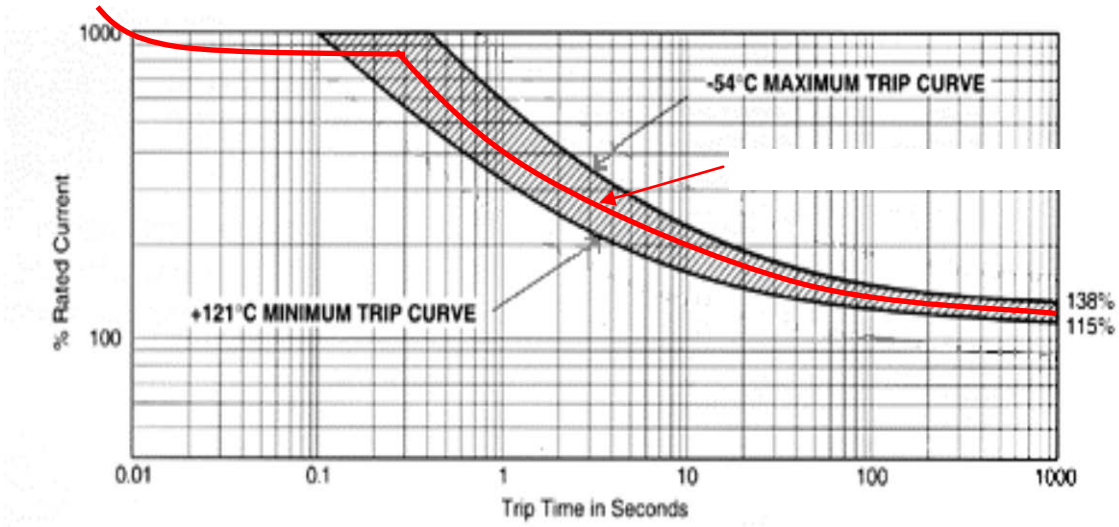

Figure A-28. Typical I^2t Thermal Circuit Breaker Trip Curve

A.13.11.1 Test Procedure.

With all loads on, use a resistor bank or other load to quickly increase the load to the 3x trip level while observing smart panel and GUI detail display. Not completed on aircraft.

With all other loads on and the DUT off, use a resistor bank or other load to increase the load to the 3x trip level; then, observing the smart panel and the GUI, turn on the DUT. Not completed on aircraft.

With all loads on, use a resistor bank or other load to quickly increase the load to the 2x trip level while observing smart panel and GUI detail display.

With all other loads on and the DUT off, use a resistor bank or other load to increase the load to the 2x trip level; then, observing the smart panel and the GUI, turn on the DUT.

A.13.11.2 Test Success Criteria.

- Successful trip with overload applied during operation
  - Trip within trip curve time limits
  - No anomalous operation of other breakers or the smart panel
  - GUI and panel indicate I^2t trip
- Successful trip with short in place at turn-on
  - Trip within trip curve time limits

- No anomalous operation of other breakers or the smart panel

- The GUI and panel indicate I^2t trip

In all cases, no damage to the ECB or to the power source is permitted.

A.13.12 The AC Phase to Ground Hard Fault Test.

Hard faults will be simulated per table A-1, within the limits of the test aircraft system.

The table defines the approximate source impedance of the 737 generation system and feed wiring in the short term (1 or 2 cycles). Hard fault is to be applied to airframe ground as close as possible to ECB output, simulating a miswire or wire damage at the ECB connection point.

Table A-1. Circuit Breaker Rating and Max Expected Current

Circuit Breaker Rating (Amps)	Power Source Capacity (Single-cycle transient fault rms current shall not be less than this value)
½ - 10	400
11 – 20	400
21 – 25	2000% ($20I_n$)
26 – 40	2000% ($20I_n$)
41 – 60	2000% ($20I_n$)

A.13.12.1 Test Procedure.

With all loads on, use a shorting link or similar to quickly short the load while observing smart panel and GUI detail display.

With all other loads on and the DUT off, use a shorting link or similar to short the load, then, observing the smart panel and the GUI, turn on the DUT.

A.13.12.2 Test Success Criteria.

- Successful trip with short applied during operation

  - Trip within 1 cycle

  - No anomalous operation of other breakers or the smart panel

  - The GUI and panel indicate arc fault trip (note: software does not distinguish between hard faults and arcs at this time)

- Successful trip with short in place at turn-on
    - Trip within 2 cycles
    - No anomalous operation of other breakers or the smart panel
    - The GUI and panel indicate arc fault trip (note: software does not distinguish between hard faults and arcs at this time)

In all cases, no damage to the ECB or to the power source is permitted.

A.13.13 The AC Phase-to-Phase Hard Fault Test.

Hard faults to be simulated between individual CBs on different phases, simulating a crossed wire or cable short. Hard fault to be applied as close to the ECBU as practical.

A.13.13.1 Test Procedure.

With all loads on, use a shorting link or similar to quickly short the ECB output from one phase to another while observing the smart panel and GUI detail display. Not completed on aircraft.

With all other loads on and the DUT off, use a shorting link or similar to short the ECB output from one phase to another; then, observing the smart panel and the GUI, turn on the DUT. Not completed on aircraft.

A.13.13.2 Test Success Criteria.

- Successful trip with short applied during operation
    - Trip within 1 cycle
    - No anomalous operation of other breakers or the smart panel
    - The GUI and panel indicate arc fault trip (note: software does not distinguish between hard faults and arcs at this time)
- Successful trip with short in place at turn-on
    - Trip within 2 cycles
    - No anomalous operation of other breakers or the smart panel
    - The GUI and panel indicate arc fault trip (note: software does not distinguish between hard faults and arcs at this time)

In all cases, no damage to the ECB or to the power source is permitted.

A.13.14 The AC Phase-to-Ground Arc Fault Test.

Arc faults will be generated using the circuit shown in figure A-29.

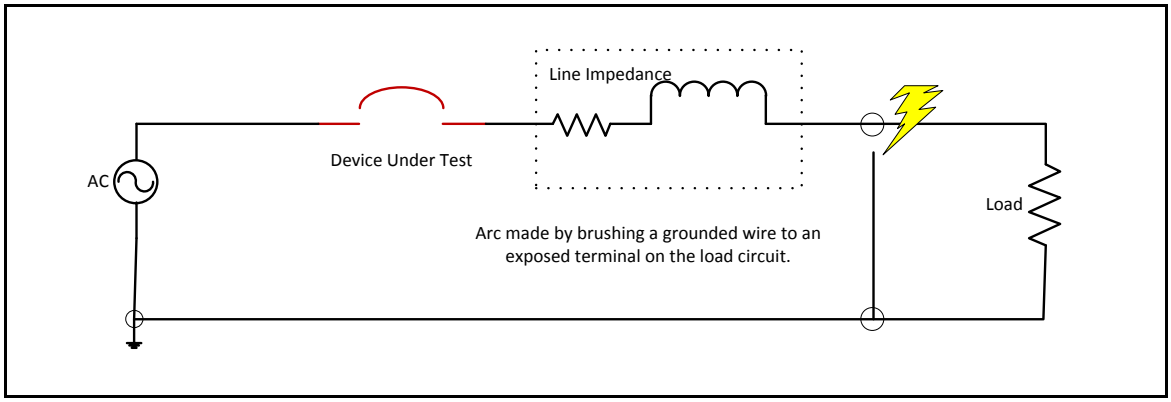

Figure A-29. The AC Parallel Arc Fault Test Circuit

A.13.14.1 Test Procedure.

With all loads on, use a grounded wire or similar to create an arcing fault across the load while observing smart panel and GUI detail display.

A.13.14.2 Test Success Criteria.

- Successful trip with short applied during operation
  - Trip within 4 cycles
  - No anomalous operation of other CBs or the smart panel
  - The GUI and panel indicate arc fault trip (note: software does not distinguish between hard faults and arcs at this time)

In all cases, no damage to the ECB or to the power source is permitted.

APPENDIX B—SMART PANEL DESIGN DOCUMENTATION AND INSTALLATION INFORMATION

B.1 INSTALLATION DRAWING.

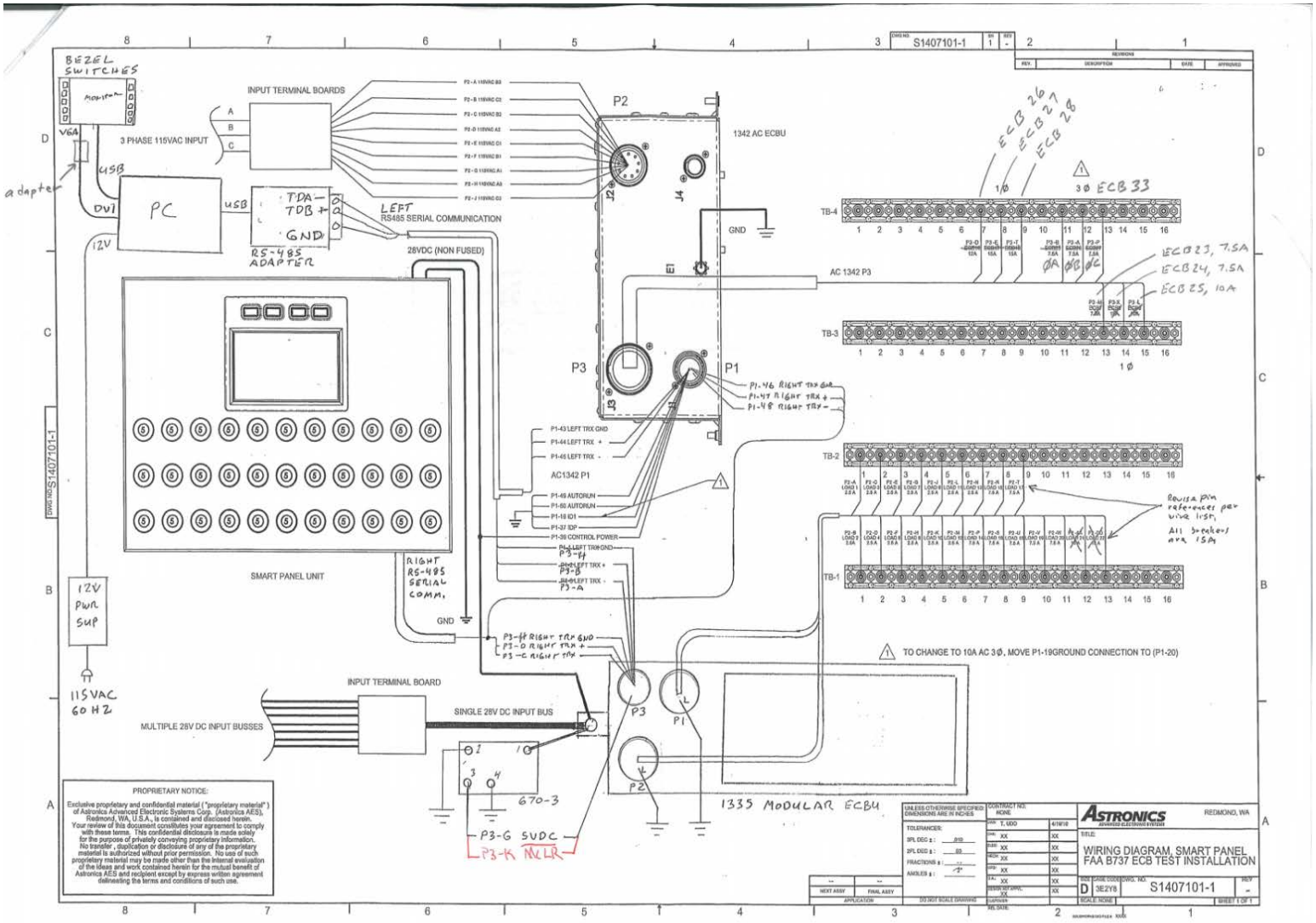

B.2 WIRE LISTS.

B.2.1 THE DIRECT CURRENT MODULAR ELECTRONIC CIRCUIT BREAKER UNIT WIRE LIST.

DC ECBU PIN	FUNCTION	DESTINATION
P1-A	ECB 10	TB1-5
P1-B	ECB 12	TB1-6
P1-C	ECB 6	TB1-3
P1-D	ECB 5	TB2-3
P1-E	ECB 3	TB2-2
P1-F	ECB 1	TB2-1
P1-G	ECB 2	TB1-1
P1-H	ECB 4	TB1-2
P1-J	ECB 8	TB1-4
P1-K	ECB 14	TB1-7
P1-L	Ground	Chassis
P2-A	ECB 11	TB2-6
P2-B	ECB 20	TB1-11
P2-C	ECB 17	TB2-9
P2-D	ECB 19	TB1-10
P2-E	ECB 13	TB2-7
P2-F	ECB 15	TB2-8
P2-G	ECB 9	TB2-5
P2-H	ECB 16	TB1-8
P2-J	ECB 7	TB2-4
P2-K	ECB 18	TB1-9
P2-L	Ground	Chassis
P3-A	Left TRX -	RS485 Adapter TDA(-)
P3-B	Left TRX +	RS485 Adapter TDB(-)
P3-C	Right TRX -	On-Board Controller
P3-D	Right TRX +	On-Board Controller
P3-E	Programming Clock	N/C
P3-F	28VDC	N/C
P3-G	5VDC Input	670-3 Pin 3
P3-H	Ground	Chassis
P3-J	Programming Data	N/C
P3-K	Programming MCLR~	N/C
Bus Bar	28VDC Input	28VDC Terminal Board
		N/C = Not Connected

B.2.2 ALTERNATING CURRECT ELECTRONIC CIRCUIT BREAKER UNIT WIRE LIST.

AC ECBU PIN	FUNCTION	DESTINATION
P1-19	ID 1	Chassis
P1-37	ID Parity	Chassis
P1-39	Control Power	28 VDC Bus Bar
P1-43	Left TRX Ground	RS-485 Adapter GND
P1-44	Left TRX +	RS-485 Adapter TDB(+)
P1-45	Left TRX -	RS-485 Adapter TDA(-)
P1-46	Right TRX Ground	On-Board Controller
P1-47	Right TRX +	On-Board Controller
P1-48	Right TRX -	On-Board Controller
P1-49	Autorun	Chassis
P1-50	Autorun	Chassis
J2-A	115VAC B3	115VAC Input Terminals
J2-B	115VAC C2	115VAC Input Terminals
J2-C	115VAC B2	115VAC Input Terminals
J2-D	115VAC A2	115VAC Input Terminals
J2-E	115VAC C1	115VAC Input Terminals
J2-F	115VAC B1	115VAC Input Terminals
J2-G	115VAC A1	115VAC Input Terminals
J2-H	115VAC A3	115VAC Input Terminals
J2-J	115VAC C3	115VAC Input Terminals
P3-A	3 Phase B	TB4-12
P3-B	3 Phase A	TB4-11
P3-D	Panel ECB 26 - 12A	TB4-7
P3-E	Panel ECB 27 - 15A	TB4-8
P3-L	Panel ECB 25 - 10A	TB3-15
P3-M	Panel ECB 23 - 7.5A	TB3-13
P3-P	3 Phase C	TB4-13
P3-T	Panel ECB 28 - 15A	TB4-9
P3-X	Panel ECB 24 - 7.5A	TB3-14
E1	Chassis	Chassis

B.2.3 Power Supply.

670-3 Pin	FUNCTION	DESTINATION
1	28VDC Input	28 VDC Bus Bar
2	Ground	Chassis
3	5VDC Output	ECBU P3-H
4	Ground	Chassis

B.2.4 The RS-485 Adapter.

RS-485 Adapter	FUNCTION	DESTINATION	DESTINATION
TDA(-)	Left RS-485 Bus -	1342 ECBU P1-45	1335 ECBU P3-A
TDB(+)	Left RS-485 Bus +	1342 ECBU P1-44	1335 ECBU P3-B
RDA(-)	Not Used	N/C	N/C
RDA(+)	Not Used	N/C	N/C
GND	Ground	1342 ECBU P1-43	1335 ECBU P3-H

B.2.5 The Graphical User Interface Monitor (Flight Display Systems Display).

PIN	FUNCTION	DESTINATION
1	28 VDC Power Input	28 VDC Bus Bar
2	Ground	Chassis
3	N/C	N/C
4	Composite Video 1 Signal	N/C
5	Composite Video 1 Shield	N/C
6	N/C	N/C
7	Composite Video 2 Signal	N/C
8	Composite Video 2 Shield	N/C
9	Red Video	VGA Pin 1
10	Green Video	VGA Pin 2
11	Blue Video	VGA Pin 3
12	Red Ground	VGA Pin 6
13	Green Ground	VGA Pin 7
14	Horizontal Sync	VGA Pin 13
15	Vertical Sync	VGA Pin 14
		VGA pins refer to the VGA connector side of the computer's DVI to VGA adapter cable.

B.2.6 Installation Photographs.

Figure B-1. Federal Aviation Administration (FAA) 737 Installation Team

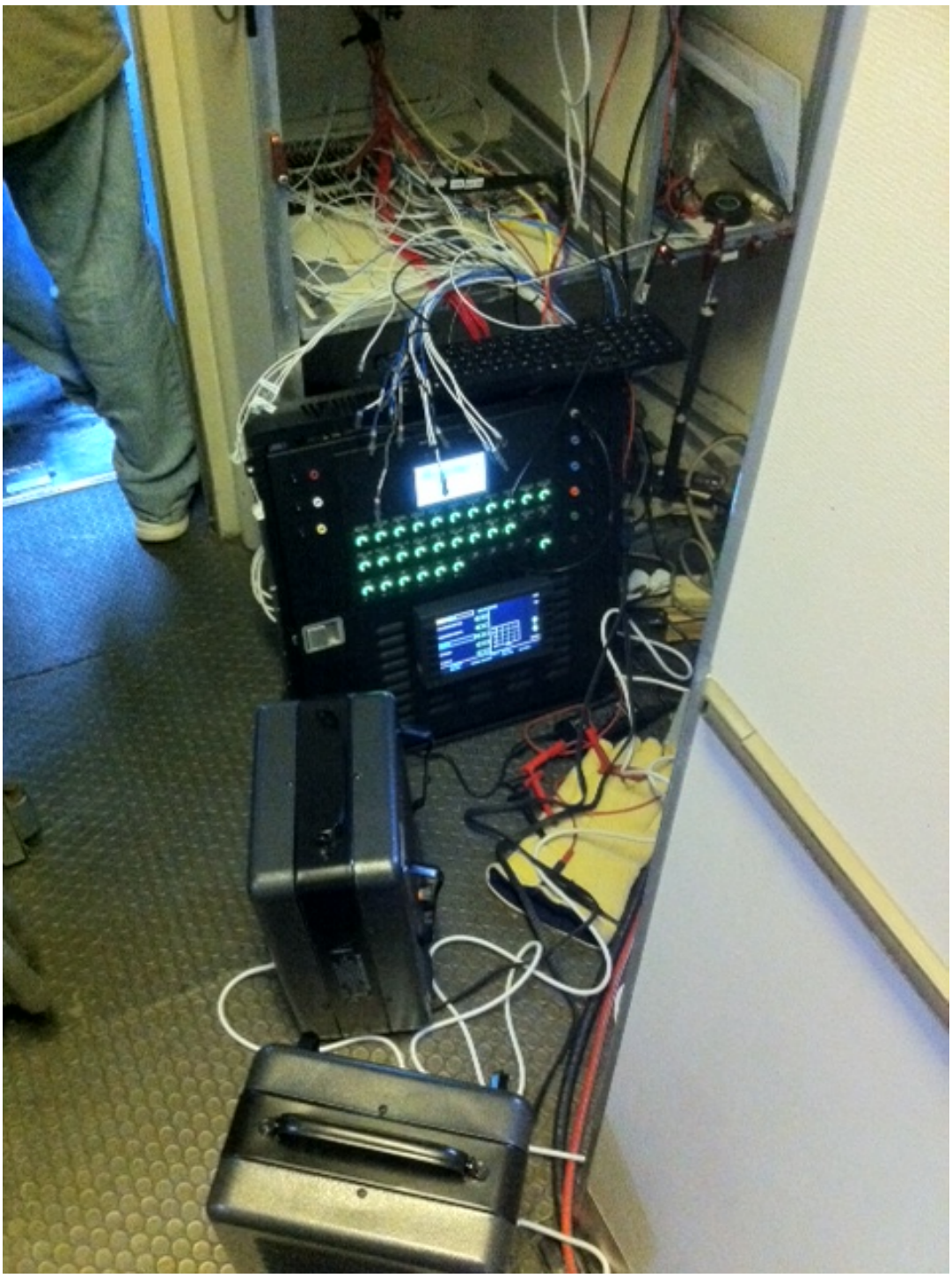

Figure B-2. Astronics Smart Panel Operating With Heater Loads on the FAA's 737

Figure B-3. Full Smart Panel Display