technical note technical note

FASTER Fixture Modification: PRSEUS Test

January 2015

DOT/FAA/TC-TN14/17

This document is available to the U.S. public through the National Technical Information Services (NTIS), Springfield, Virginia 22161.

This document is also available from the Federal Aviation Administration William J. Hughes Technical Center at actlibrary.tc.faa.gov.

U.S. Department of Transportation
Federal Aviation Administration

NOTICE

This document is disseminated under the sponsorship of the U.S. Department of Transportation in the interest of information exchange. The U.S. Government assumes no liability for the contents or use thereof. The U.S. Government does not endorse products or manufacturers. Trade or manufacturers' names appear herein solely because they are considered essential to the objective of this report. The findings and conclusions in this report are those of the author(s) and do not necessarily represent the views of the funding agency. This document does not constitute FAA policy. Consult the FAA sponsoring organization listed on the Technical Documentation page as to its use.

This report is available at the Federal Aviation Administration William J. Hughes Technical Center's Full-Text Technical Reports page: actlibrary.tc.faa.gov in Adobe Acrobat portable document format (PDF).

Technical Report Documentation Page

1. Report No.	2. Government Accession No.	3. Recipient's Catalog No.
DOT/FAA/TC-TN14/17		

4. Title and Subtitle	5. Report Date
FASTER FIXTURE MODIFICATION: PRSEUS TEST	January 2015
	6. Performing Organization Code
7. Author(s)	8. Performing Organization Report No.
Andrew C. Bergan, John G. Bakuckas Jr., and Gregory J. Korkosz	
9. Performing Organization Name and Address	10. Work Unit No. (TRAIS)
Federal Aviation Administration William J. Hughes Technical Center Atlantic City International Airport, NJ 08405	
	11. Contract or Grant No.
12. Sponsoring Agency Name and Address	13. Type of Report and Period Covered
U.S. Department of Transportation Federal Aviation Administration William J. Hughes Technical Center Aviation Research Division Materials and Structures Section ANG-E281 Atlantic City International Airport, NJ 08405	Technical Note
	14. Sponsoring Agency Code ANM-115

15. Supplementary Notes

The Federal Aviation Administration William J. Hughes Technical Center Aviation Research Division COR was Dr. John Bakuckas, Jr.

16. Abstract

This technical note describes modifications made to the Full-Scale Aircraft Structural Test Evaluation and Research (FASTER) fixture required to test an advanced integrally stitched composite fuselage panel termed the pultruded rod stitched efficient unitized structure (PRSEUS) concept. The FASTER fixture axial load capacity was increased by eight times the original design to apply catastrophic failure loads to the PRSEUS test panel. The modified axial loading mechanism was operated using hydraulic jacks with a standalone hydraulic system controlled by the existing computer control system. The modified FASTER fixture used two sets of seven axial loaders aligned with the stringers at each end of the panel, two sets of seven hoop loaders along each straight edge of the panel, and two sets of five frame loaders connected directly to the frame ends to apply load. The frame loaders were modified to slide freely in the axial direction. Modifications were also made to accommodate the larger panel radius, which was connected to the pressure box using a modular seal design.

17. Key Words	18. Distribution Statement
Fixture modification, Full-scale test, PRSEUS, Residual strength testing, Structural test, FASTER	This document is available to the U.S. public through the National Technical Information Service (NTIS), Springfield, Virginia 22161. This document is also available from the Federal Aviation Administration William J. Hughes Technical Center at actlibrary.tc.faa.gov

19. Security Classif. (of this report)	20. Security Classif. (of this page)	21. No. of Pages	22. Price
Unclassified	Unclassified	118	

Form DOT F 1700.7 (8-72) Reproduction of completed page authorized

TABLE OF CONTENTS

	Page
EXECUTIVE SUMMARY	viii
INTRODUCTION	1
FIXTURE DISASSEMBLY	3
MODIFICATIONS PERFORMED	7
Pressure Box	7
Frame Loader Modifications	8
Hoop Loader Modifications	12
Axial Loading System	13
Control System	16
Proof Test	17
Bench Test	22
MODULAR SEAL	28
PANEL AND AXIAL LOADING MECHANISM INSTALLATION	31
SUMMARY	36
REFERENCES	36
APPENDICES	
A—Engineering Drawings	
B—Axial Load Controller Source Code	

LIST OF FIGURES

Figure		Page
1	Comparison of Existing and Modified FASTER Fixture	2
2	Removal of Old Panel From FASTER Fixture	3
3	Before and After Removal of the Frame Loaders	4
4	FASTER Fixture After Disassembling the Loaders	5
5	Removing the RCCM	6
6	Bolt Pattern and Hole Depth Used for Seal Shim	7
7	The Seal Shim on the Pressure Box Prior to Bolted Installation	8
8	Frame Loader Slide System	9
9	Existing Pressure Box Diagonal Braces: Pressure Box With Frame Loaders Removed and Detail View of Diagonal Brace	10
10	Relocation of Diagonal Braces	10
11	View of Pressure Box Showing Rail Position	11
12	Frame Loader Installation: Frame Loader Rail System and Frame Loaders Installed	12
13	Components of the Frame Loader	12
14	Hoop Loader Before and After Modification: Before 727 Configuration and After PRSEUS Configuration	13
15	Axial Load Mechanism Assembly: Axial Loading Mechanism, Cross Beam With Seven Load Trains, and Single Load Train Assembly	14
16	Assembled Axial Loader	16
17	Axial Load Controller	17
18	Proof Load Test Setup	18
19	Photograph of Proof Load Test Setup	18
20	Representative Results From Proof Load Test	20

21	Load History Showing Commanded Load in Yellow and Measured Feedback Load in Blue	21
22	Hydraulic Flow Control Valve	22
23	Bench Test Strain and Displacement Measurement Locations, Exterior Surface	24
24	Bench Test Strain and Displacement Measurement Locations, Interior Surface	25
25	Bench Test Results for Load History and Distribution, Skin Strains, and Radial Displacements: Load History, Skin Strains, Axial Load Distribution at 30% DLL, and Radial Displacement	26
26	Bench Test Back-to-Back Strain Gage Results Showing Axial Bending	27
27	Modular Seal Assembly CAD Rendering	28
28	Modular Seal Wooden Mandrels Used During Assembly	29
29	Dry-Fit of One Curved End Showing the Seven Stringer Rod Pieces, Two Corner Pieces, and the Wooden Mandrels	29
30	Seal Assembly, Complete Curved End	30
31	Completed Seal Assembly	30
32	Installation of Angle Brackets	31
33	Panel Installation	32
34	First Step in Flipping the Axial Loading Fixture: Start of First 90° Rotation and End of First 90° Rotation	33
35	Second Step in Flipping the Axial Loading Fixture: Start of Second 90° Rotation and End of Second 90° Rotation	33
36	Installation of the Axial Loading Fixture on the FASTER Fixture: Lifting Configuration, Positioning Above Fixture, and Detail of Axial Loader Placement on Fixture	34
37	The FASTER Fixture With PRSEUS Modification Completed	35

LIST OF TABLES

Table		Page
1	Enerpac Hydraulic Components	15
2	Proof Load Tests	19
3	Strain Gages Used for the Bench Test	23
4	The LVDTs Used for the Bench Test	23

LIST OF ACRONYMS

DLL	Design limit load
FAA	Federal Aviation Administration
FASTER	Full-Scale Aircraft Structural Test Evaluation and Research
FEM	Finite element model
LVDT	Linear variable differential transformer
PRSEUS	Pultruded rod stitched efficient unitized structure
RCCM	Remote-control crack monitoring

EXECUTIVE SUMMARY

This technical note describes modifications made to the Full-Scale Aircraft Structural Test Evaluation and Research (FASTER) fixture required to test an advanced integrally stitched composite fuselage panel termed the pultruded rod stitched efficient unitized structure concept. The FASTER fixture axial load capacity was increased by eight times the original design to apply catastrophic failure loads to the PRSEUS test panel. The modified axial loading mechanism operated using hydraulic jacks with a standalone hydraulic system controlled by the existing computer control system. The modified FASTER fixture used two sets of seven axial loaders aligned with the stringers at each end of the panel, two sets of seven hoop loaders along each straight edge of the panel, and two sets of five frame loaders connected directly to the frame ends to apply load. The frame loaders were modified to slide freely in the axial direction. Modifications were also made to accommodate the larger panel radius, which was connected to the pressure box using a modular seal design.

INTRODUCTION

The Full-Scale Aircraft Structural Test Evaluation and Research (FASTER) fixture was originally designed for accelerated fatigue studies of metallic fuselage structures [1]. The fixture can apply combined internal pressure and axial load with appropriate hoop reactions to narrow- and wide-body fuselage panels. For the purpose of conducting the pultruded rod stitched efficient unitized structure (PRSEUS) panel test [2], the FASTER fixture was modified to accommodate a PRSEUS panel, including the enhanced axial load capacity required to apply catastrophic failure loads. The modified axial loading mechanism operated using hydraulic jacks with a standalone hydraulic system, controlled by the existing computer control system. The modified FASTER fixture used two sets of seven axial loaders aligned with the stringers at each end of the panel, two sets of seven hoop loaders along each straight edge of the panel, and two sets of five frame loaders connected directly to the frame ends to apply load. Complete details of the modification are provided in this technical note.

The FASTER fixture modifications include accommodations for a larger panel radius, a modular seal for full-length stringers, a frame loader slide system for large axial displacements, and an increased axial load capacity. A comparison of the existing fixture and the modified fixture is shown in figure 1, highlighting the new axial load mechanism.

The axial loader modifications included structural modifications to the fixture, the addition of a hydraulic axial loading mechanism, and a standalone control system. The axial loading mechanism was designed as a complete standalone system; therefore, an off-fixture proof test using dummy load bars and a bench test with the panel were conducted to verify that the system performed to the design load capacity and introduced load as designed into the test panel.

This technical note is organized with a separate section for each portion of the modification as follows: fixture disassembly, pressure box modification, frame loader modification, axial loading system, modular seal, and panel and axial loading mechanism installation. The engineering drawings are available in appendix A.

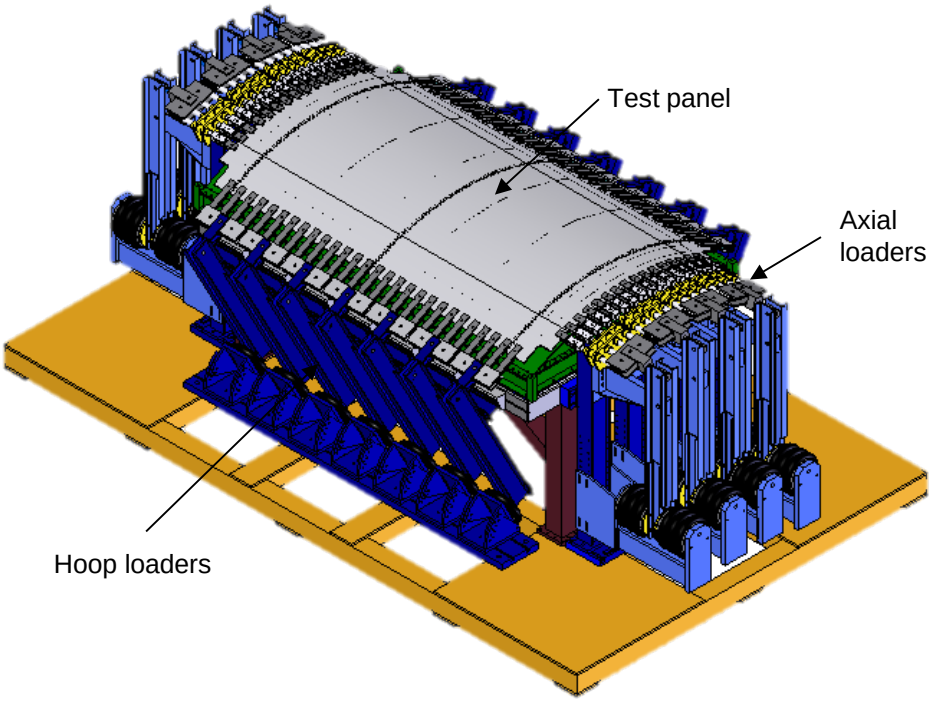

(a) Existing FASTER fixture

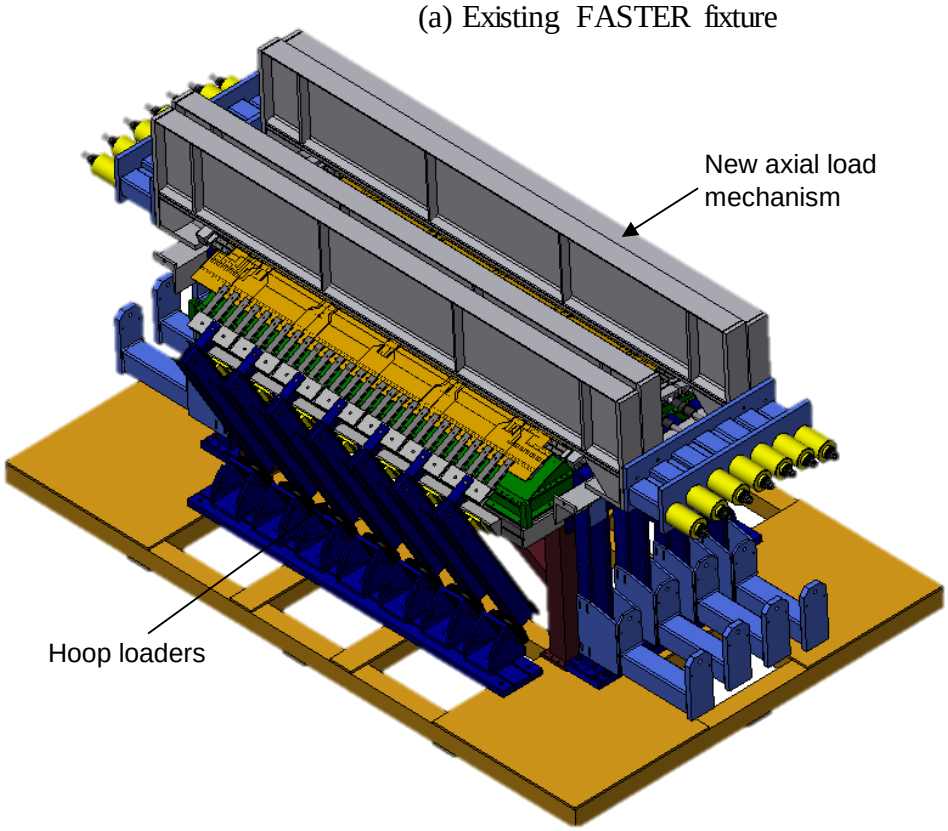

(b) Modified FASTER fixture

Figure 1. Comparison of Existing and Modified FASTER Fixture

FIXTURE DISASSEMBLY

A significant disassembly effort was first undertaken to prepare the fixture for the modifications. The axial, hoop, and frame loader pins were removed from the previously installed panel and the hoop whiffle trees were removed (see figure 2). Next, the frame loaders were removed (see figure 3).

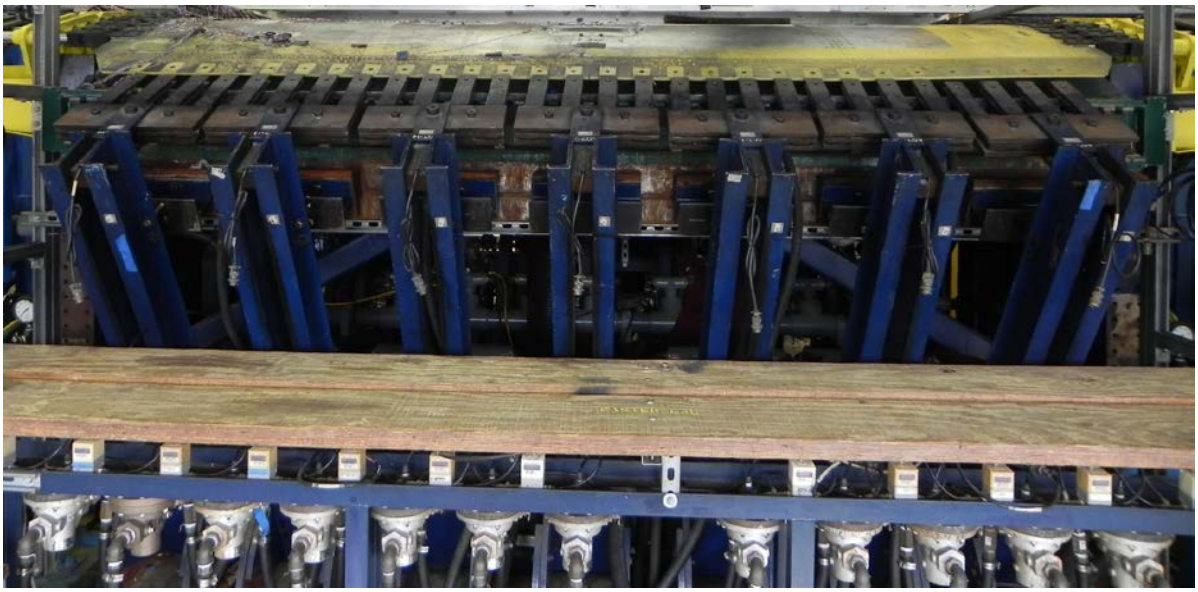

(a) Whiffle tree fingers unpinned From panel

(b) Whiffle trees removed From the hoop loaders

Figure 2. Removal of Old Panel From FASTER Fixture

(a) Pressure box after the panel was removed

(b) Pressure box after the frame loaders were removed

Figure 3. Before and After Removal of the Frame Loaders

The hoop loader levers and fulcrums and the axial loader guides and whiffle trees were also removed (see figure 4). The remote-control crack monitoring (RCCM) system and two of the four shear fixture towers were removed (see figure 5).

Figure 4. FASTER Fixture After Disassembling the Loaders

All axial loader assemblies, frame loaders, and hoop loaders were identified for placement in the same location for future tests and then removed. Various worn rubber water hoses were replaced. Load cells were removed and recalibrated. The load cells in the frame loaders that measure load in the hoop direction were recalibrated to 6900-lb. load capacity from the original 5000-lb. load capacity.

Figure 5. Removing the RCCM

MODIFICATIONS PERFORMED

Modifications were performed to a variety of the fixture loading mechanisms and subsystems. Each is summarized as follows.

PRESSURE BOX.

The original pressure box of the FASTER fixture was designed for a fuselage radius of 74 inches. Modifications were required to accommodate a fuselage radius of 90 inches for the PRSEUS panel. For this, a seal shim was added to the pressure box opening to accommodate the PRSEUS panel's larger radius. The seal shim was fabricated by Atlas Machine and Welding Inc. per engineering drawings summarized in appendix A. Installation of the seal shim included sealing and bolting it to the pressure box opening, grinding reliefs in the pressure box opening, and drilling and tapping holes for the seal strip. Pressure box opening reliefs were required for adequate clearance between the pressure box opening and the frame loaders, and were located using reliefs machined into the seal shim. The bolt pattern used for the seal shim is shown in figure 6 and was chosen to accommodate blind holes for attachment to the pressure box and the seal strip. Figure 7 shows the seal shim is shown on the pressure box prior to installation.

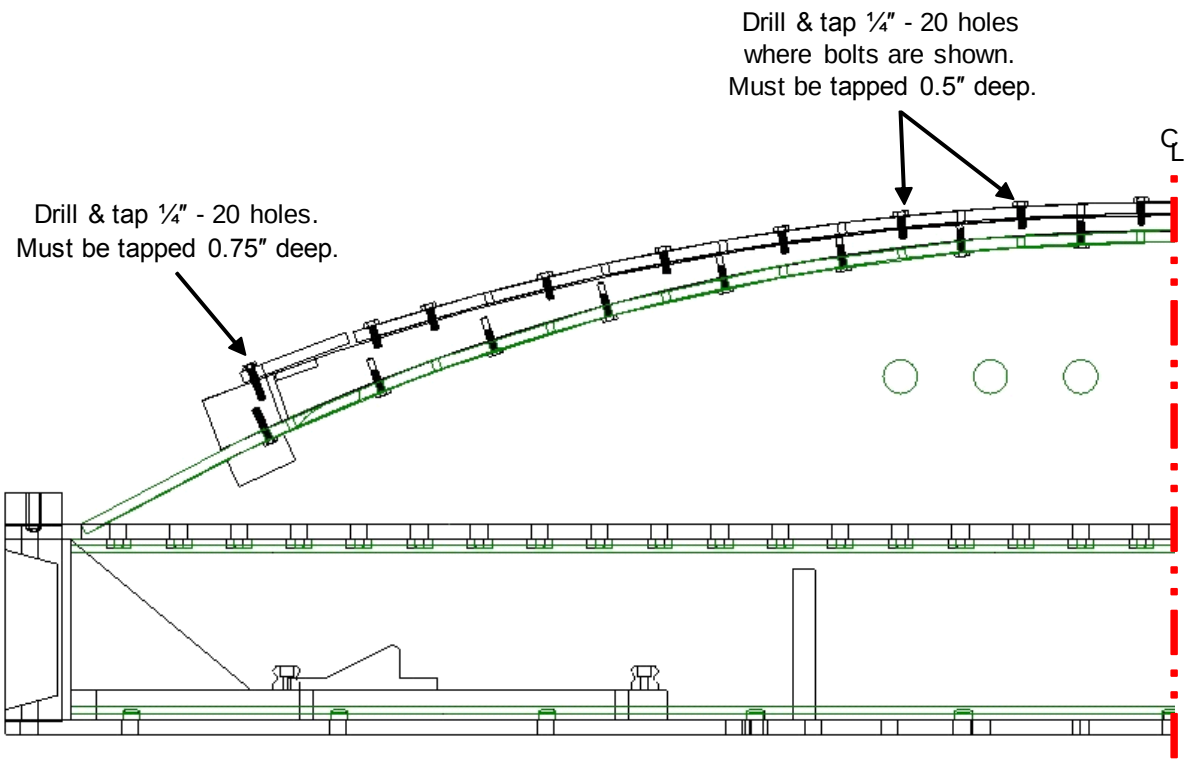

Figure 6. Bolt Pattern and Hole Depth Used for Seal Shim

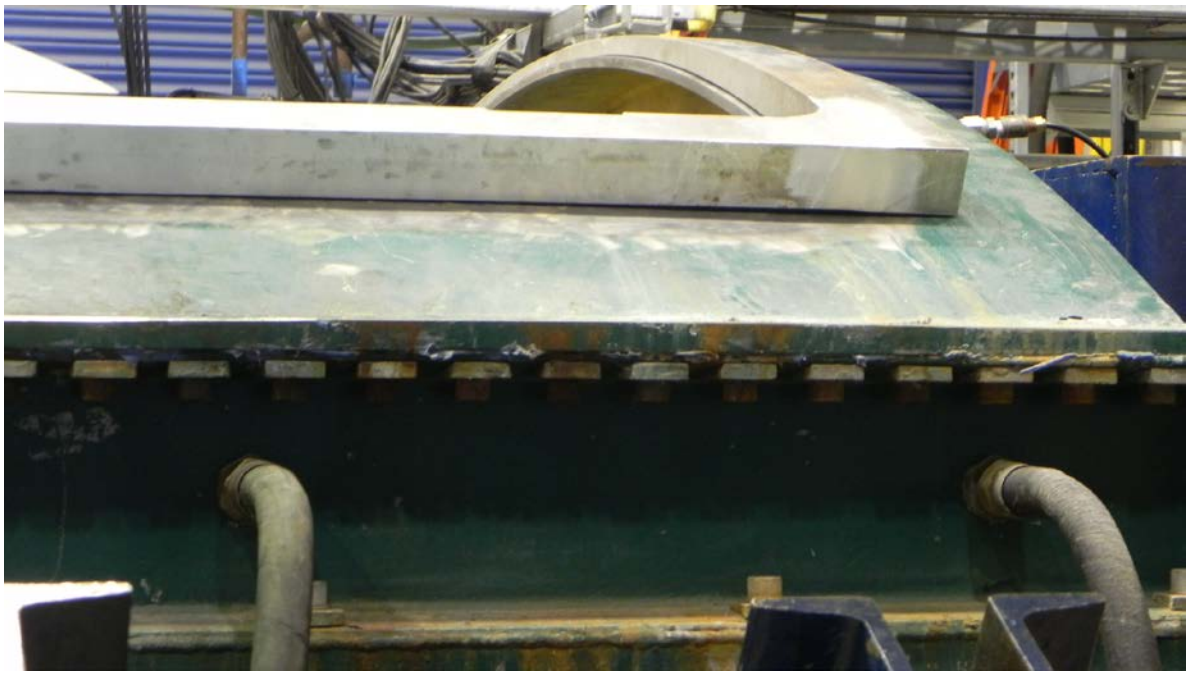

Figure 7. The Seal Shim on the Pressure Box Prior to Bolted Installation

FRAME LOADER MODIFICATIONS.

The frame loaders in the original FASTER fixture were constrained in the axial direction and were designed for typical fatigue loading conditions. However, initial test predictions showed an overall axial displacement of up to 0.25 inch between the outer frames under the high axial loads that were anticipated to fail the PRSEUS panel in a residual strength test. Under the constrained conditions of the original frame loaders, large unrealistic reaction forces would be induced at the frame attachment points, which are not representative of flight loads. Modifications were required to allow axial movement of the frame loaders to prevent this constrained condition, which will be magnified by the high applied load levels. For this, a frame loader slide system was designed that allows the frame loaders to move freely in the axial direction, as shown in figure 8.

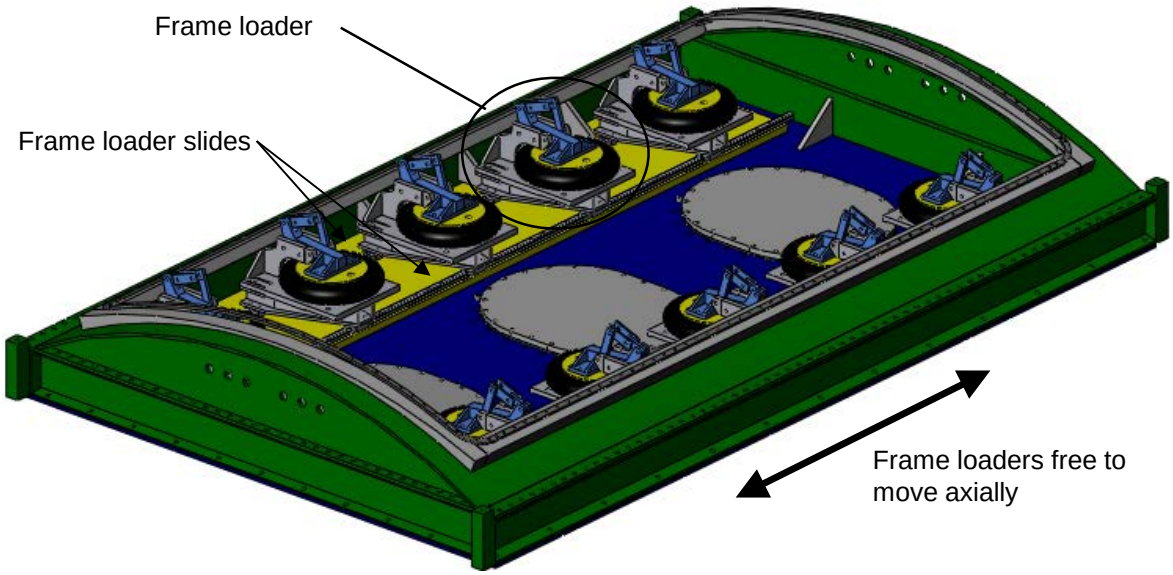

Figure 8. Frame Loader Slide System

The frame loaders were modified and a spacer was used so that they were positioned appropriately for the larger PRSEUS panel radius. The frame loader modifications were fabricated per engineering drawings summarized in table A-1, appendix A. The spacers (figure A-11) and load link extenders (figure A-15) were fabricated by the FAA William J. Hughes Technical Center machine shop and the modifications to the existing frame loaders were completed by Hun Machine Works, Inc.

Modifications were made with the intention of using the rail system with future tests. A total of 10 frame loader assemblies were required for the PRSEUS test. However, all 12 existing frame loader assemblies were modified. The pressure box diagonal braces in figure 9, shown circled in red, interfered with the modified frame loaders because of the change from 12 to 10 loaders. Four diagonal braces were placed in noninterfering locations to maintain the functionality of the braces in supporting the pressure box, as shown in figure 10. The existing top blocks were left in place and new top blocks were welded in the required locations.

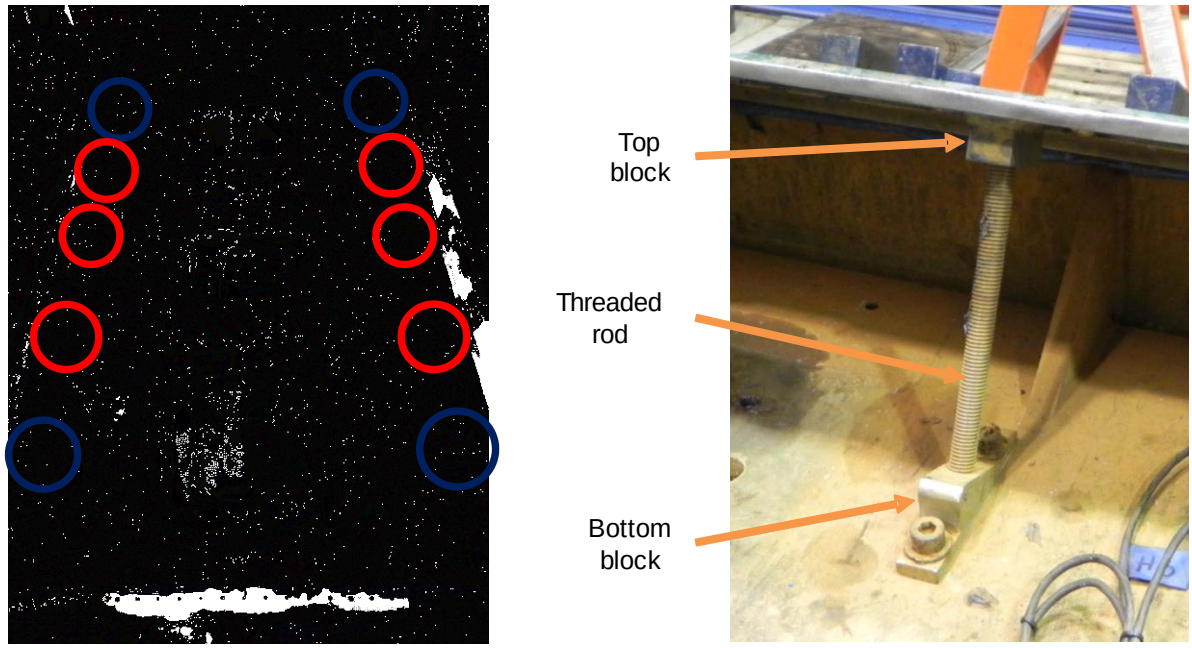

(a) Pressure box with frame loaders removed

(b) Detail view of diagonal brace

Figure 9. Existing Pressure Box Diagonal Braces: (a) Pressure Box With Frame Loaders Removed and (b) Detail View of Diagonal Brace (the middle six, circled in red, caused an interference)

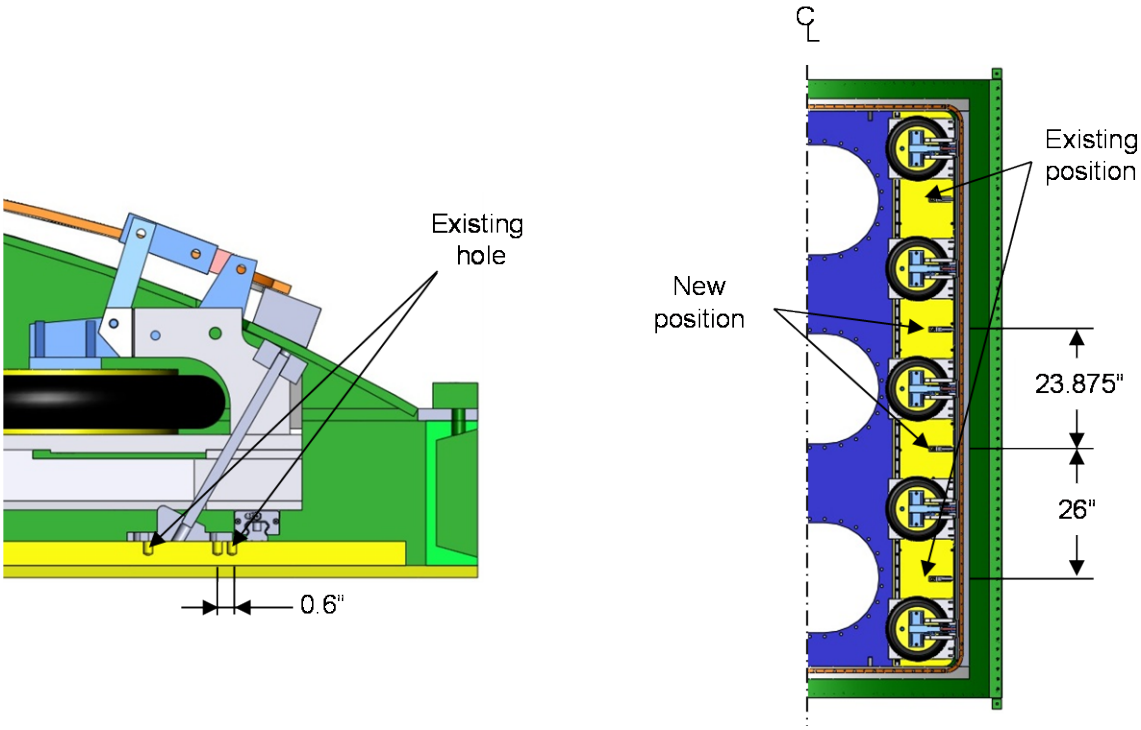

Figure 10. Relocation of Diagonal Braces

The rail system that was used consisted of NB Corporation stainless steel 440c rail and guide assemblies. Each side of the pressure box used two rails with one carriage for each loader on the inboard rail and two carriages for each loader on the outboard rail. The inboard and outboard rails were part numbers SGL25TFBR6-2960 and SGL25TFBR12-2960, respectively. The rails were installed on one side of the pressure box at a time. Two rails were attached with three frame loader vertical spacers to maintain parallel orientation. The outboard rail was positioned 6.38 inches from the edge of the pressure box, as shown in figure 11, and the rails were bolted to the pressure box in this position with M6 screws. The installed rail system with all vertical spacers is shown in figure 12.

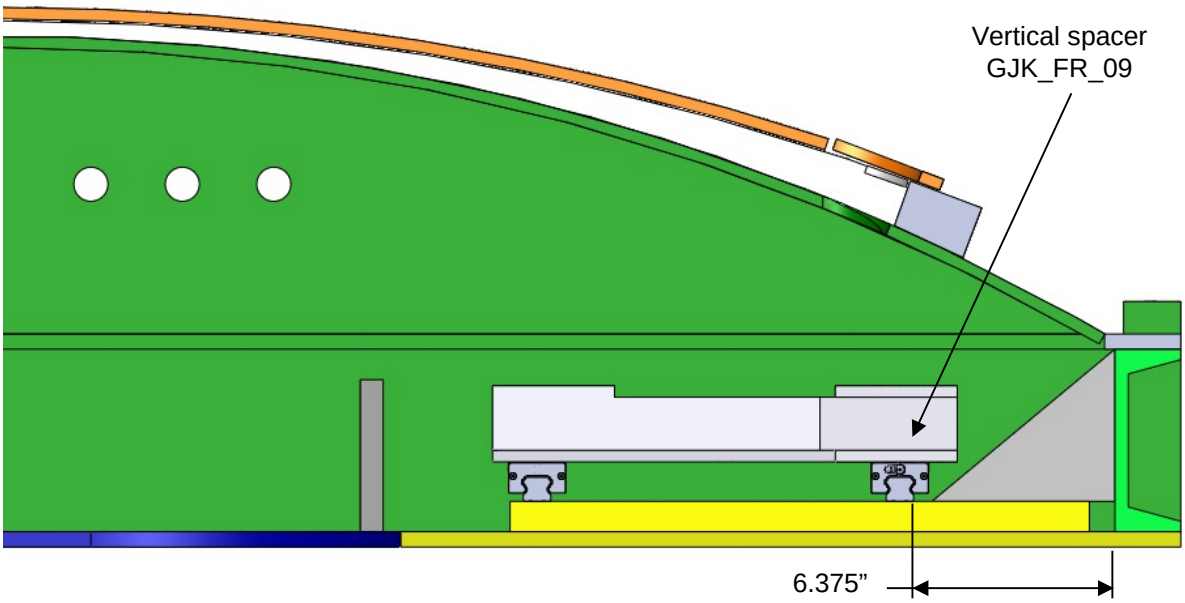

Figure 11. View of Pressure Box Showing Rail Position

The modified frame loaders were reassembled with the existing bladders and hardware. The frame loader assemblies were loosely bolted to the vertical spacers prior to panel installation, as shown in figure 12. The water hose and electrical connections were secured. Once the panel was installed, the inboard-outboard position of the frame loaders was adjusted appropriately to engage with the panel and the loaders were securely bolted in place. Then, the frame hoop load cells were attached to the load link extenders (see figure 13). A 3/8-inch diameter shoulder bolt was used to fasten the panel frames to the frame loaders with bushings inserted in the frame ends.

a) Frame loader rail system

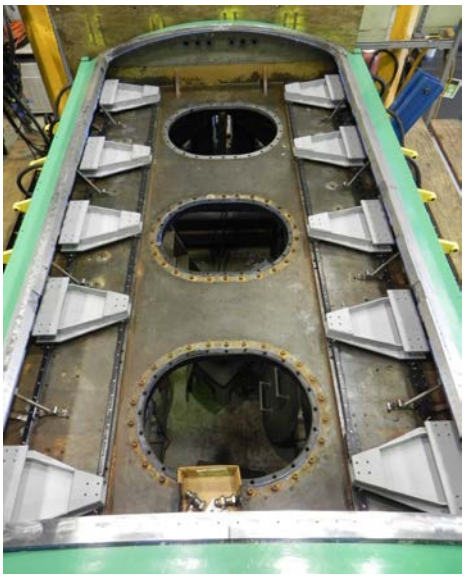

b) Frame loaders installed

Figure 12. Frame Loader Installation: (a) Frame Loader Rail System and (b) Frame Loaders Installed

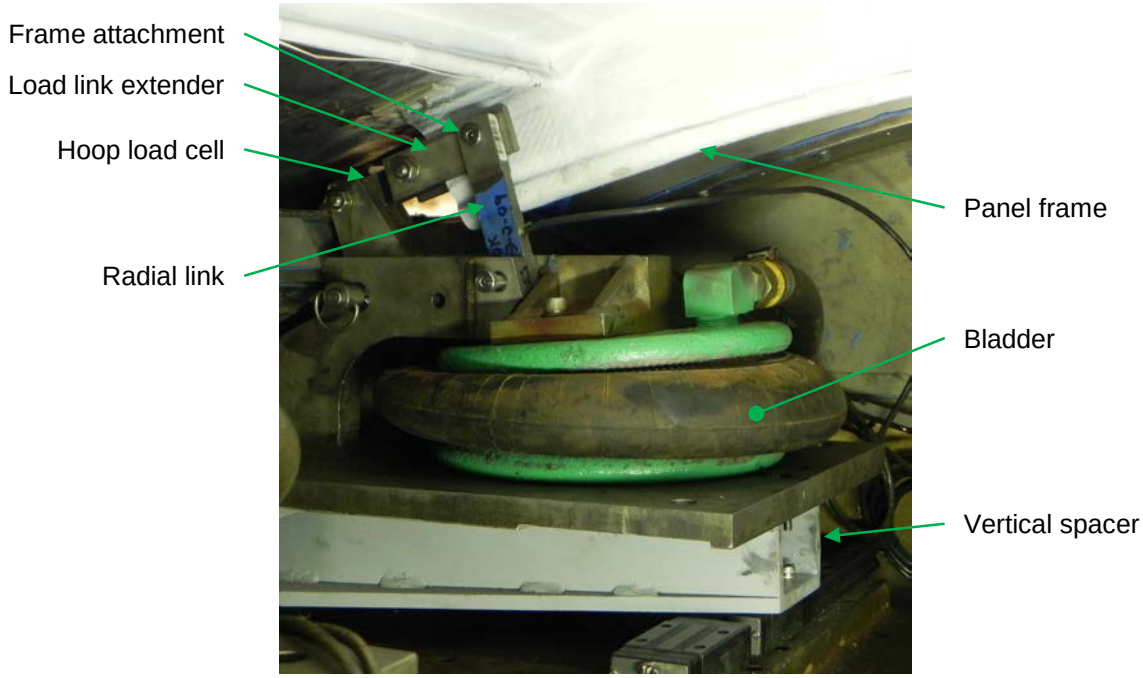

Figure 13. Components of the Frame Loader

HOOP LOADER MODIFICATIONS.

The hoop loaders were modified to accommodate the PRSEUS panel's larger radius, as shown in figure 14. A longer lever arm (channel pair) was used. The existing fulcrum was a flexure design for a zero-friction pivot. Because of the geometry of the larger radius, the fulcrum point

was relocated and, therefore, because it was impractical to use a flexure pivot, was redesigned to use a pinned joint. The new lever arms and fulcrums were fabricated and painted by Atlas Machine and Welding, Inc. per engineering drawings listed in appendix A.

During installation, it was determined that shims between 0.38 inch and 0.5 inch were required between the fulcrum and hoop mounting pad to maintain the required range of motion of the hoop loader bladder. The whiffle trees were assembled using existing components and hardware with the recalibrated load cells. The whiffle tree assemblies were installed after the panel was mounted on the fixture.

In contrast to previous tests conducted on the FASTER fixture, for which pins were used to fasten the hoop loader fingers to the panel, bolts were used for the PRSEUS test so that there was clamping force on the panel.

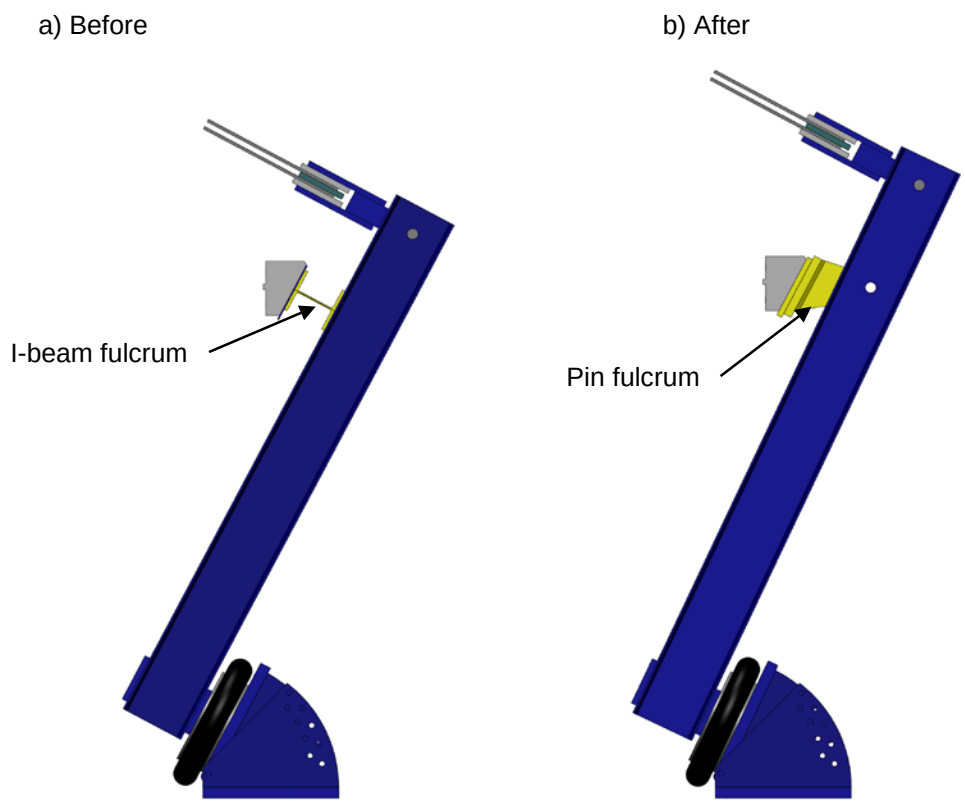

Figure 14. Hoop Loader Before and After Modification: (a) Before and (b) After Modification

AXIAL LOADING SYSTEM.

Failure loads for the PRSEUS panel were predicted to exceed the original FASTER fixture axial load capacity of 100 kips. A new axial load mechanism was designed, fabricated, assembled, proof tested, and installed to accommodate the load capacity of the PRSEUS panel. The required load capacity was 840 kips, which was based on results from other PRSEUS tests [3].

The significant increase in axial load capacity was accomplished using fourteen 60-ton hydraulic jacks connected to each end of the panel, each with a whiffle tree assembly, as shown in figures 15(a and b). The axial load is reacted by four built-up beam columns, which measure 178 inches long and 24 inches tall. Each weighs approximately one ton. A detailed view of a single axial load whiffle tree assembly is shown in figure 15(c).

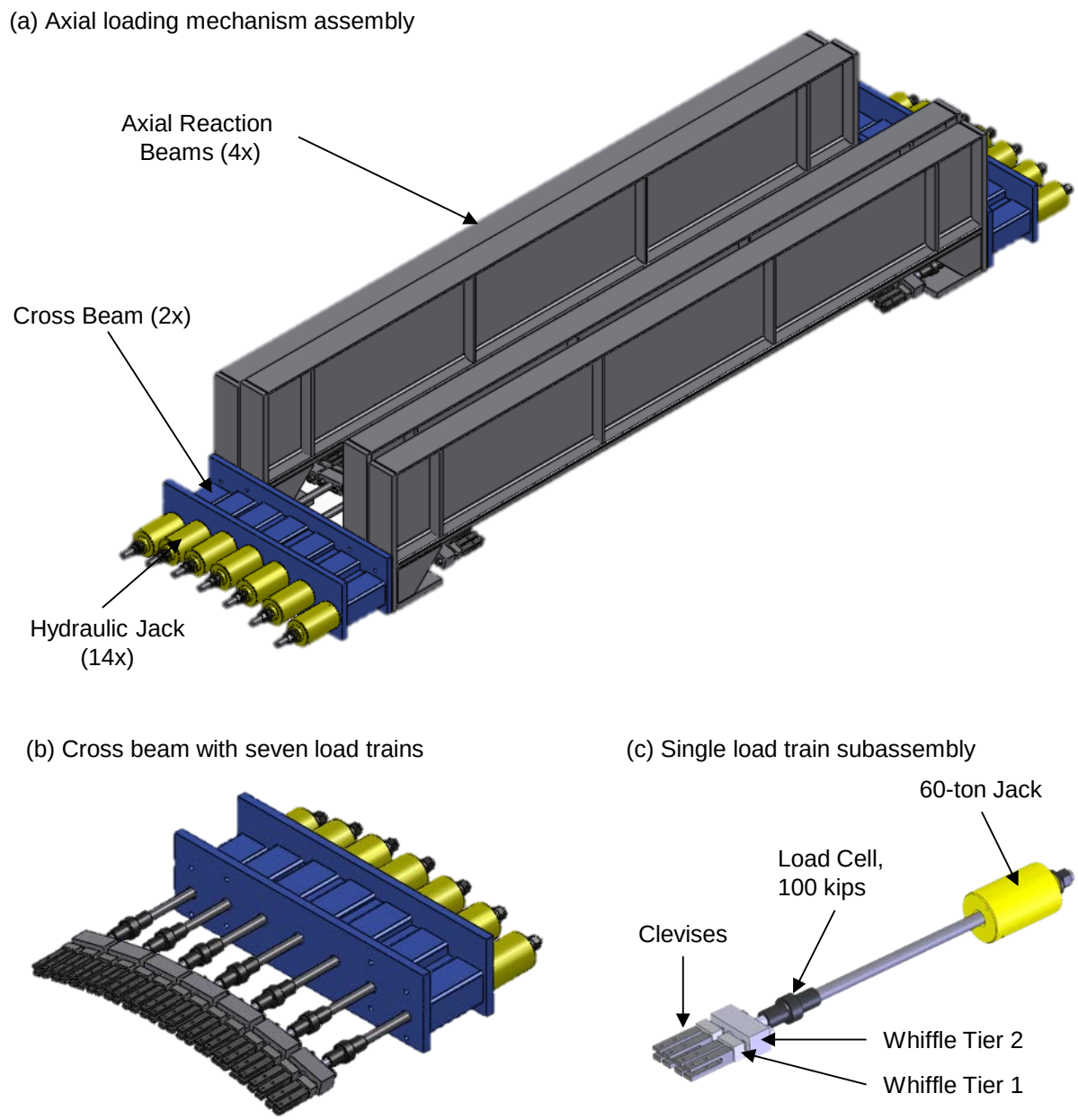

Figure 15. Axial Load Mechanism Assembly: (a) Axial Loading Mechanism Assembly, (b) Cross Beam With Seven Load Trains, and (c) Single Load Train Assembly

The axial load mechanism was designed primarily for an 840% increase in load capacity. To accomplish this, a self-reacting mechanism was used to prevent excessive load on the existing fixture, which was not designed to sustain such high loads. Additionally, the load mechanism

was designed for quasistatic testing and, therefore, used hydraulic jacks to apply load instead of the water bladder actuators. To simplify integration of the axial loading mechanism with the fixture and for flexibility in future testing, the new axial loader was designed as a standalone system. The axial loading mechanism was designed so that it could be reconfigured for full-scale quasistatic tension tests.

While load was applied at both ends of the panel, it was monitored only on the forward end at seven locations corresponding to the seven stringers using 100-kip Futek load cells (item no. FSH01857). The 840-kip capacity of the mechanism required a 20% overload of the load cells. The load cells were connected to the existing FASTER system for data acquisition.

The primary components of the loader hydraulic system were fourteen 60-ton hydraulic jacks and a hydraulic pump. Engineering drawings of the hydraulic system and control system are available in appendix A. All hydraulic components were Enerpac brand; a complete listing is available in table 1. The pump was modified to have a 50-foot-long pendant cable so that control could be performed from within the control room with the pump mounted on the fixture. All 14 hydraulic jacks were connected to the same source so that hydraulic pressure was equalized and, therefore, the load applied at each jack was approximately uniform. Quick disconnect hydraulic fittings were used so that the system only needed to be primed once.

Table 1. Enerpac Hydraulic Components

Part No.	Description	Quantity
RCH-603	Hydraulic Jack, 60 Ton	14
ZE3320SB-ST	Hydraulic Pump	1
V-66F	Cyclic Load Holding Valve, Fine-Metering	1
H-7306	Hose, 6-foot long, 3/8-inch diameter	15
H-7320	Hose, 20-foot long, 3/8-inch diameter	14
CH-604	Hose Half (Male)	14
A-604	Quick Disconnect, 3/8-inch diameter	20
FZ-1617	Close Nipple, 3/8-inch diameter	12
FZ-1613	Cross Fitting, 3/8-inch diameter	1
FZ-1612	Tee Fitting, 3/8-inch diameter	9
FZ-1610	Elbow Fitting, 3/8-inch diameter	4
HF-102	Hydraulic Oil, 5 Gallon	1

The beams, load train components, and angle braces were fabricated and painted by Atlas Machine and Welding Inc. per engineering drawings shown in appendix A. The axial load clevises (figure A-24 in appendix A) were fabricated and installed onto the panel by Boeing. Note that the second tier whiffle blocks (figure A-25 in appendix A) were manufactured per rev B, which specified a 0.875-inch vertical spacing between holes, and were modified to rev C, which specified a 0.790-inch vertical spacing by the FAA William J. Hughes Technical Center machine shop.

The axial load mechanism structure was assembled in an inverted orientation off-fixture for the purpose of the proof and bench tests. The seven hydraulic jacks were bolted to each cross beam (figure A-22 in appendix A) as shown on sheet three (figure A-20 in appendix A). The cross beams were bolted to the beam columns and shimmed so that they were aligned uniformly and squarely to minimize bending affects due to misalignment. During assembly, it was determined that PVC bushings were needed between the cross beams and load trains to maintain proper alignment of the load trains when unloaded. Two-piece bushings were fabricated from PVC tubing and bonded to the cross beams. Figure 16 shows the complete assembled structure in an inverted orientation.

Figure 16. Assembled Axial Loader (inverted)

CONTROL SYSTEM. A hysteresis control system was developed so that the command and feedback signals from the main FASTER control computer could be used to apply axial load via the hydraulic jacks at the desired magnitude and rate. The controller logic was programmed onto a Digi Rabbit SBC BL5S220 single-board computer (part no. 20-101-1260) using Dynamic C programming language. The source code is provided in appendix B. The control loop logic operated at 100 Hz. The controller was programmed with two operating modes: open loop and closed loop. In open-loop mode, the test engineer can manually add or remove load by pressing buttons on the axial load controller. In closed-loop mode, the controller uses hysteresis control to apply the load commanded by the existing FASTER control computer. The single board computer, along with some switches and indicator LEDs, were mounted in a plastic enclosure and comprised the axial load mechanism controller, as shown in figure 17.

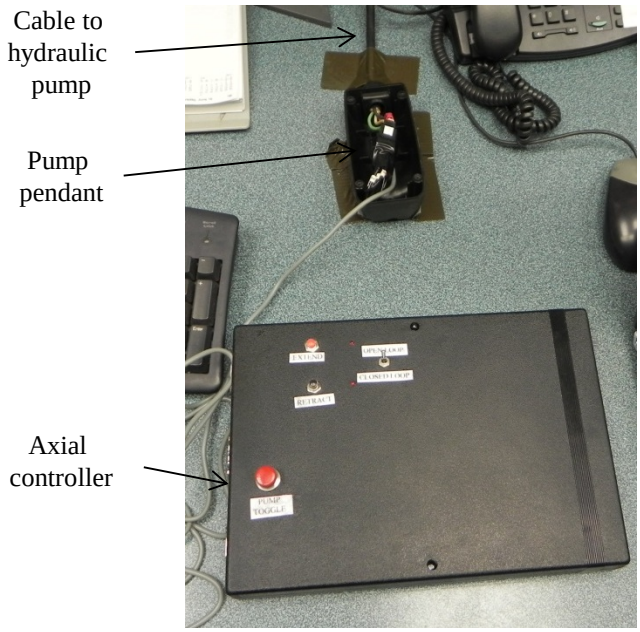

Figure 17. Axial Load Controller

The axial load controller was connected to the hydraulic pump, the command and feedback signals from the main FASTER controller, and a laptop computer. The axial load controller interfaced with the pump pendant by imitating the expected electrical signals from the pump pendant, which allowed for programmatically powering on the pump and extending and retracting the hydraulic jacks. The pump electrical interface to the control computer was via the pendant extend and retract signal lines. When the extend signal line is connected to the 15-volt power, the solenoid closes and pressure is released. When the retract signal line is connected to the 15-volt power, the pump pressure is ported to the hydraulic jacks, increasing the load. The extend and retract functions cannot be on at the same time. Relays on the Rabbit processor board controlled the extend and retract functions, as demanded by the control loop. Load cell channel 4 (aligned with S-4) was used for sending the command signal to the axial load controller. The proportional, integral, and derivative gain settings used were all 0, which provided the analog equivalent of the command signal. Load cell channel 5 (aligned with S-5) was used for sending the error signal to the axial controller. The proportional gain was set to 1 and all other gains were set to 0, which provided a proportional analog signal of the error with 50% error generating full-scale voltage. The controller was programmed to command pump actuation for any error greater than 0.1% full scale. The axial load controller was also connected to a laptop computer via a serial-to-USB converter for logging. The axial load controller provided indication of the pump status (on or off); extension or retraction command to the jacks via LEDs; and functionality for powering the pump on, increasing load, decreasing load, and toggling between open- and closed-loop control.

<u>PROOF TEST</u>. A proof load test for which the axial loading mechanism was loaded to 100% capacity using dummy load bars was conducted to verify that the system functioned properly. Fourteen dummy load bars (figure A-46, appendix A) were used in place of the test panel. Strain gages and linear variable differential transformers (LVDTs) were installed on the proof load bars

and hydraulic bars to monitor axial strain and displacement to verify a linear response. Two strain gages were installed on the top and bottom flanges of one beam column to verify minimal bending. The strain gage locations are shown in figure 18. The complete test setup is shown in figure 19.

Four tests were performed, with the first three to 30% load capacity to verify the functionality of the axial load controller, and the last to 100% load capacity to verify linearity of the system. The tests performed are listed in table 2, with the load magnitude reached as a percent of load capacity and a description.

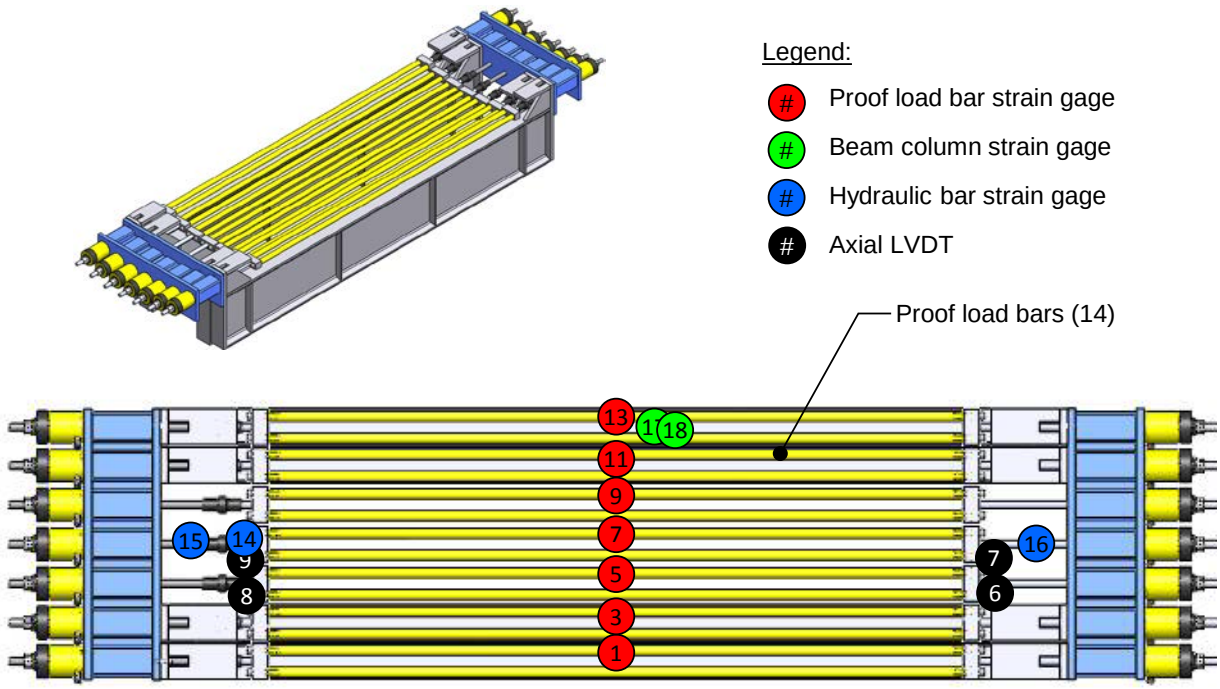

Figure 18. Proof Load Test Setup

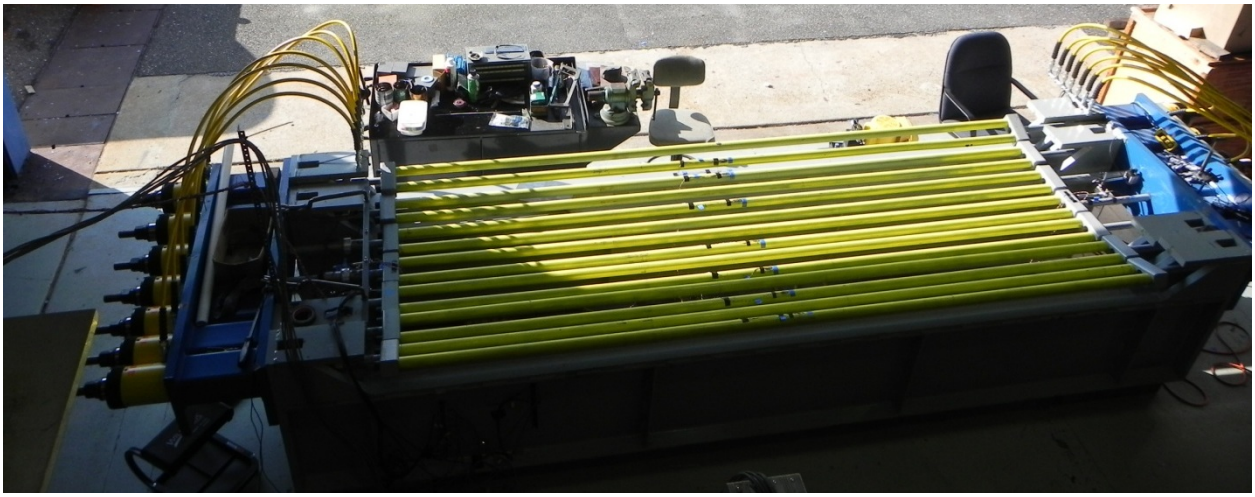

Figure 19. Photograph of Proof Load Test Setup

Some representative results from the 100% capacity proof load test are shown in figure 20. Strain and displacement were linear up to maximum load with minimal bending in the beam columns. Load was distributed relatively uniformly across each loader. Minimal nonlinearity observed at low load levels are determined negligible.

Table 2. Proof Load Tests

Test	Load (percent of capacity)	Description
A	30%	Axial controller operating standalone in open-loop mode
B	30%	Axial controller operating with FASTER computer in open-loop mode
C	30%	Axial controller operating with FASTER computer in closed-loop mode
D	100%	Axial controller operating with FASTER computer in closed-loop mode

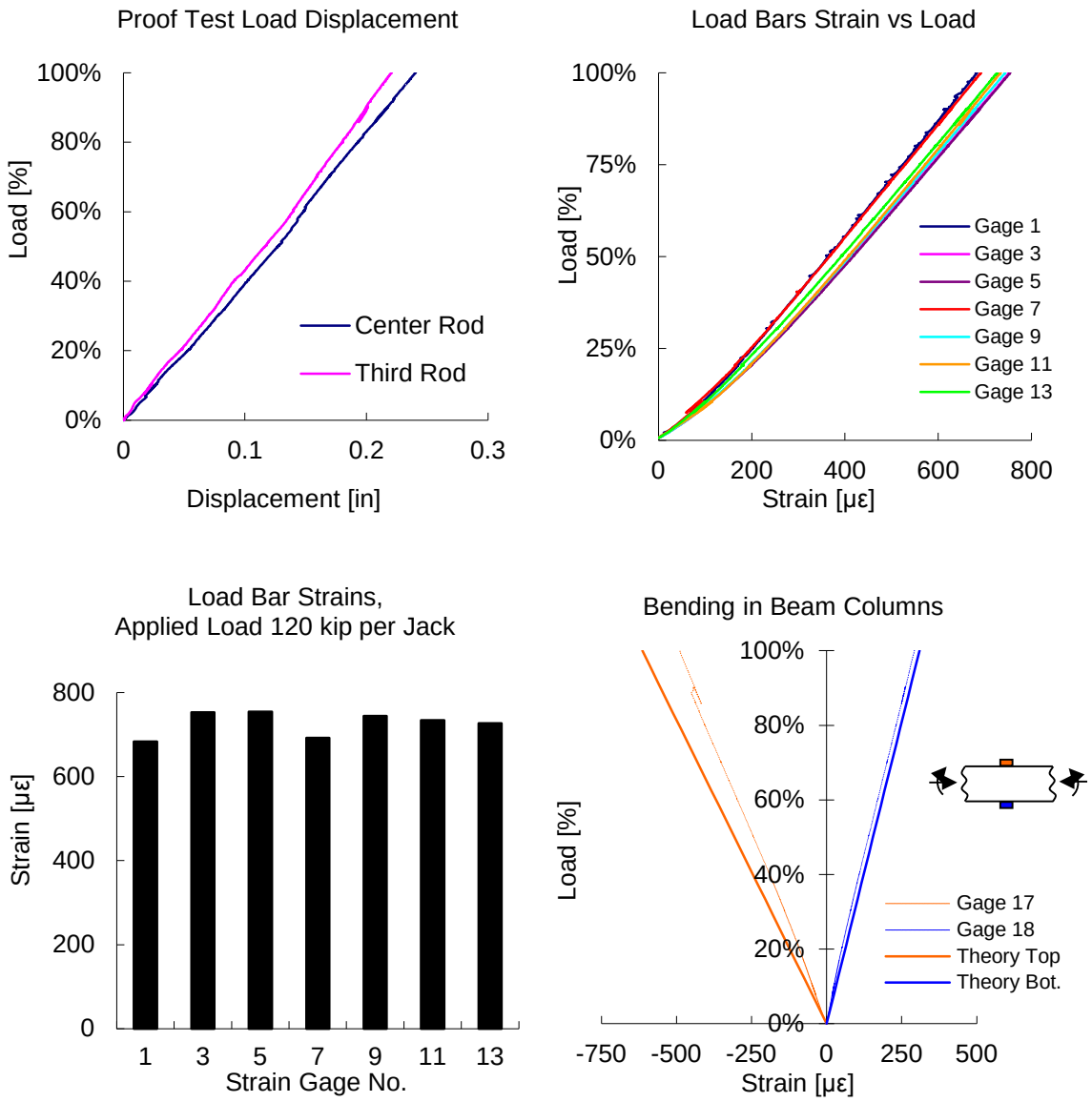

Figure 20. Representative Results From Proof Load Test

Load performance is shown in the load history plot in figure 21 with the command shown in yellow and the feedback shown in blue. Performance during loading was satisfactory, with the feedback closely following the command up to the maximum load. During unloading, load dropped faster than the pump could actuate its control valve, so unloading performance was poor.

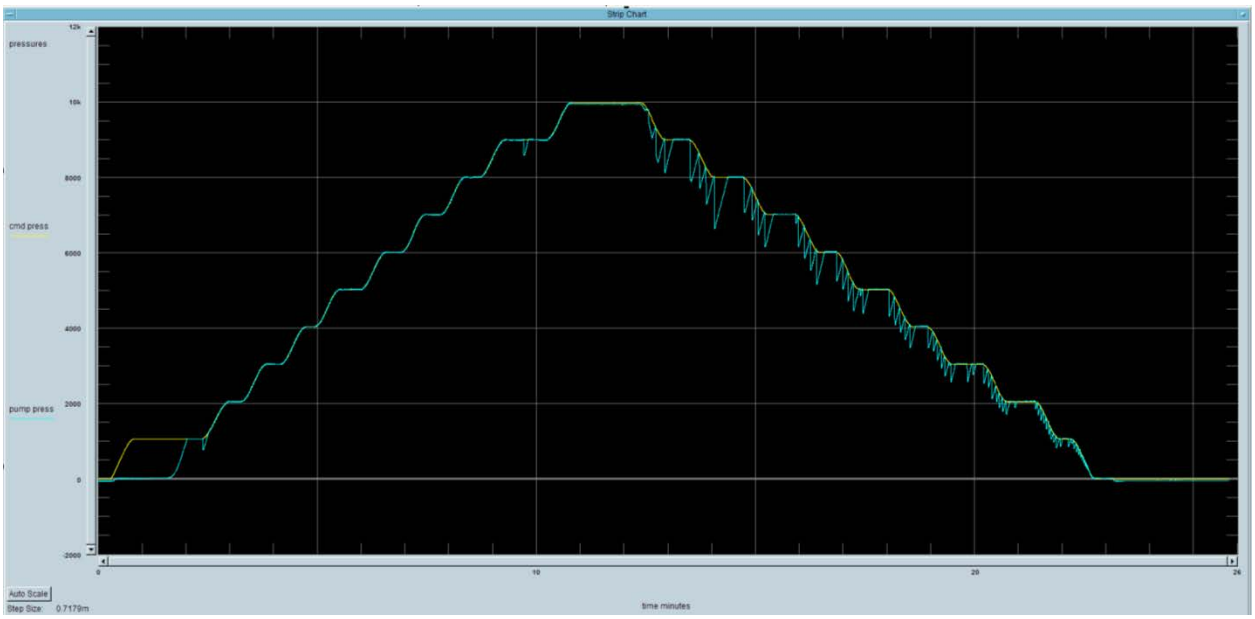

Figure 21. Load History Showing Commanded Load in Yellow and Measured Feedback Load in Blue

A hydraulic flow-control needle valve was used to control the unloading rate and improve unloading performance of the control system (shown in figure 22). The adjustable needle valve was tested at a variety of positions from fully opened to fully closed; three revolutions from fully opened were found to provide the optimal performance. Unloading performance was similar to loading performance, with the error in load applied at one jack less than 0.1% of full scale.

With the valve installed in the system, an emergency load dump would not immediately unload the system because of the restriction created by the valve. To alleviate this problem, a stepper motor was attached to the flow control valve adjustment knob so that the position of the valve could be adjusted by the axial load controller. The controller was programmed so that it would move the valve to three revolutions from fully opened on startup. If a dump command was received, the controller would fully open the valve to allow for minimal impediment to unloading.

Figure 22. Hydraulic Flow Control Valve

BENCH TEST. A bench test was performed in which the panel was mounted in the inverted axial load mechanism (off-fixture) and loaded to 30% of design limit load (DLL) to verify proper load introduction into the panel and to provide baseline data for verification of the finite element model (FEM). Data were collected from 16 strain gages and 8 LVDTs, listed in tables 3 and 4, and with locations shown in figures 23 and 24.

Table 3. Strain Gages Used for the Bench Test

Strain Gage No.	Location Code	Location Description	Orientation
3	AS	Exterior skin, intersection of F-1 and S-5	Axial
8	AS	Exterior skin, midway between F-2 and F-3, above S-4	Axial
9	AS	Exterior skin, midway between F-2 and F-3, above S-5	Axial
17	AS	Exterior skin, adjacent to F-4, above S-5	Axial
22	AS	Exterior skin, intersection of F-5 and S-5	Axial
29	SR	Stringer rod cap, near F-1 and on top of S-5	Axial
38	BS	Interior skin, near F-2 and midway between S-5 and S-6	Axial
39	BS	Interior skin, near F-2 and midway between S-5 and S-6	Axial
43	SR	Stringer rod cap, midway between F-2 and F-3 and on top of S-5	Axial
56	FF	Frame flange, intersection of F-3 and S-1, aft-outboard corner	Hoop
63	SR	Stringer rod cap, near F-4 and on top of S-5	Hoop
64	BS	Interior skin, near F-4 and midway between S-4 and S-5	Axial
66	SR	Interior skin, near F-4 and midway between S-3 and S-4	Axial
70	FF	Frame flange, intersection of F-4 and S-1, aft-outboard corner	Hoop
74	SR	Stringer rod cap, near F-5 and on top of S-5	Axial
77	FF	Frame flange, intersection of F-5 and S-1, aft-outboard corner	Hoop

Table 4. The LVDTs Used for the Bench Test

LVDT No.	Location Description	Orientation
1	Aft axial end, at termination of S-4	Axial
2	Aft axial end, at termination of S-4	Axial
3	Aft axial end, at termination of S-3	Axial
4	Aft axial end, at termination of S-2	Axial
5	Aft axial end, at termination of S-1	Axial
6	Intersection of F-2 and S-4	Radial
7	Intersection of F-3 and S-4	Radial
8	Intersection of F-4 and S-4	Radial

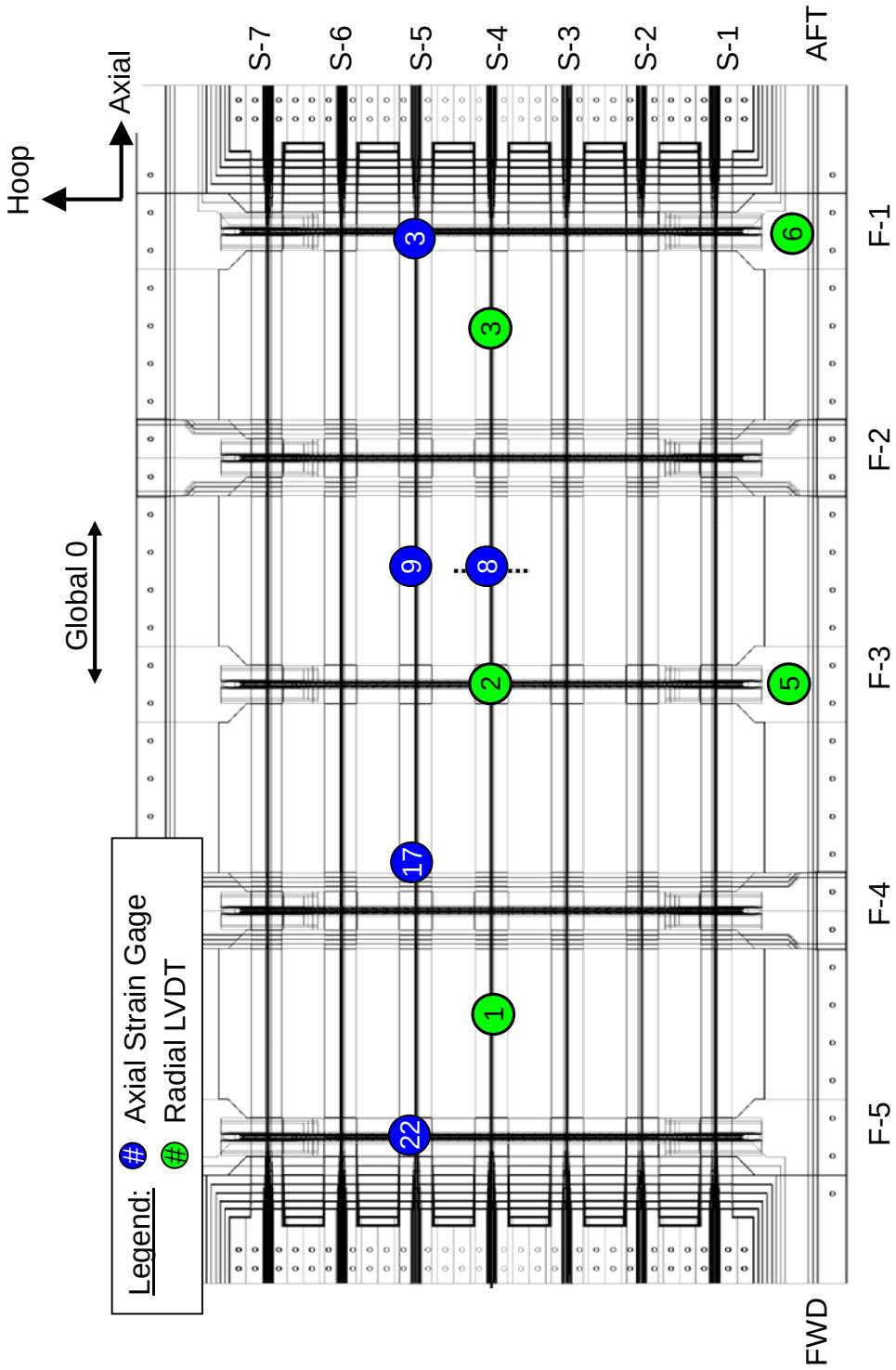

Figure 23. Bench Test Strain and Displacement Measurement Locations, Exterior Surface

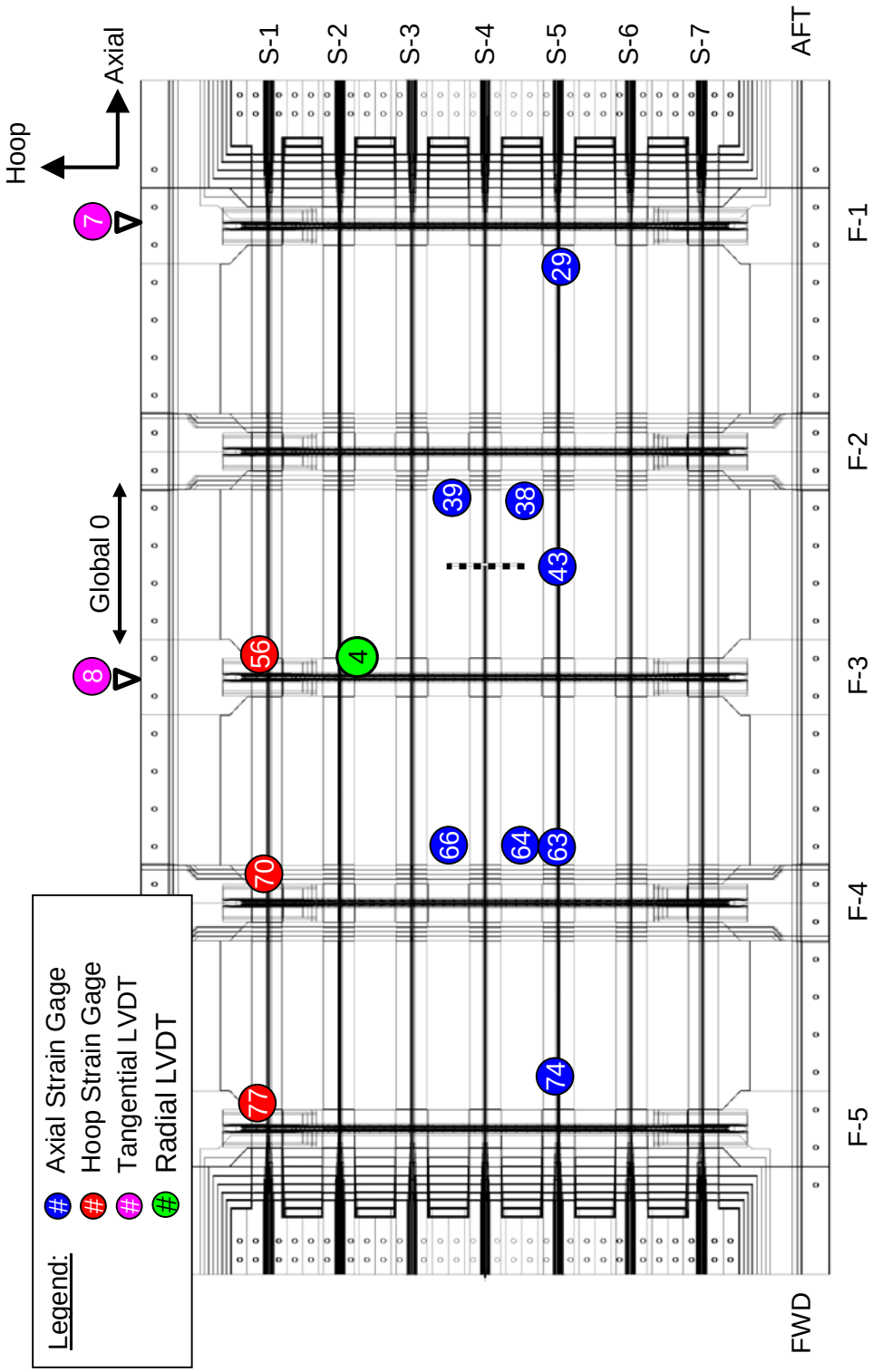

Figure 24. Bench Test Strain and Displacement Measurement Locations, Interior Surface

Results from the bench test are shown in figures 25 and 26 with pretest FEM predictions overlaid where appropriate. Two loadings were performed to verify repeatability (shown in figure 25(a)).

Even load distribution was observed across all seven axial load cells (figure 25(c)). Uniform strains were observed in the test section skin (figure 25(b)). Some bending was observed in both the radial displacement results (figure 25(d)) and the back-to-back axial strain gage results (figure 26). The FEM did not predict the bending that was observed. The bending was most likely due to minor misalignment of the test fixture; therefore it was deemed negligible. Good agreement was observed between the strain results and FEM predictions shown in figure 26.

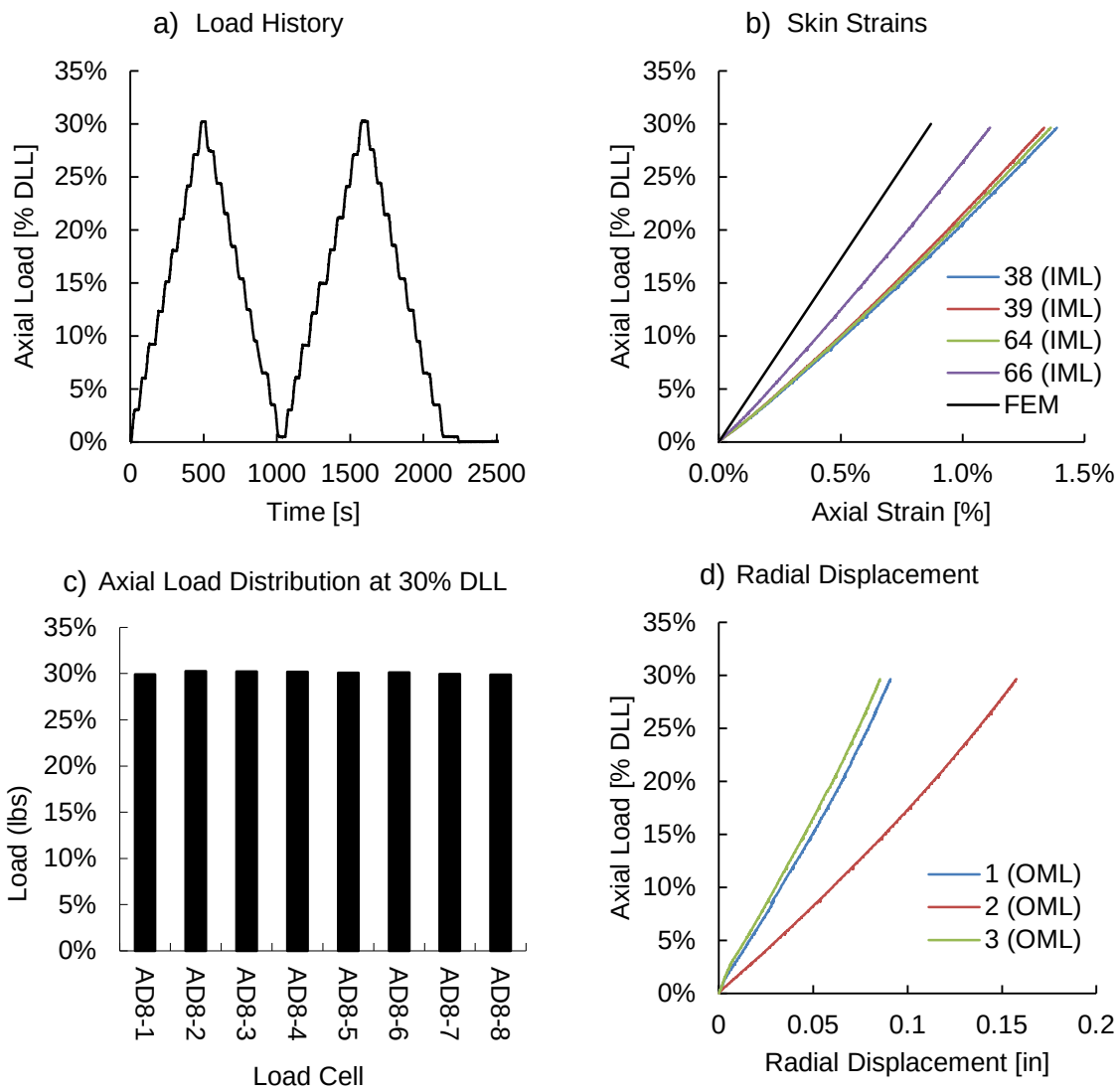

Figure 25. Bench Test Results for Load History and Distribution, Skin Strains, and Radial Displacements: (a) Load History, (b) Skin Strains, (c) Axial Load Distribution at 30% DLL, and (d) Radial Displacement

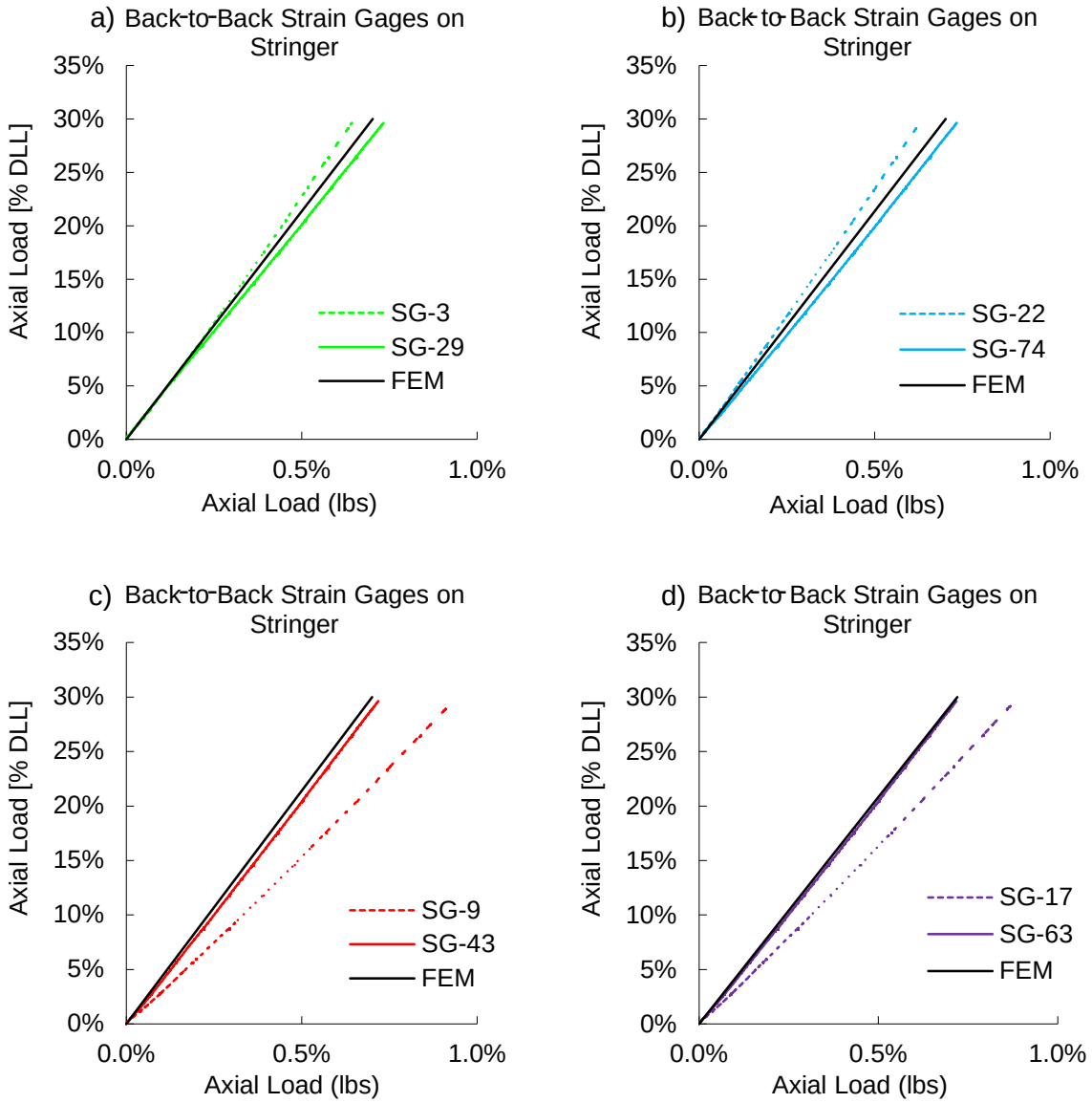

Figure 26. Bench Test Back-to-Back Strain Gage Results Showing Axial Bending

MODULAR SEAL

A modular seal was designed, fabricated, assembled, and installed to accommodate the full-length stringers of the PRSEUS panel, which provided a more economical alternative to a single-piece molded seal. The multipiece seal was first assembled and then installed on the panel.

The seal design consisted of four molded corner pieces, 14 molded stringer rod pieces, and straight sections constructed with sheet material cut to size during the assembly process. A CAD rendering of the seal design in the assembled state is shown in figure 27. The corner and stringer pieces were designed so that a single molding tool was required for each.

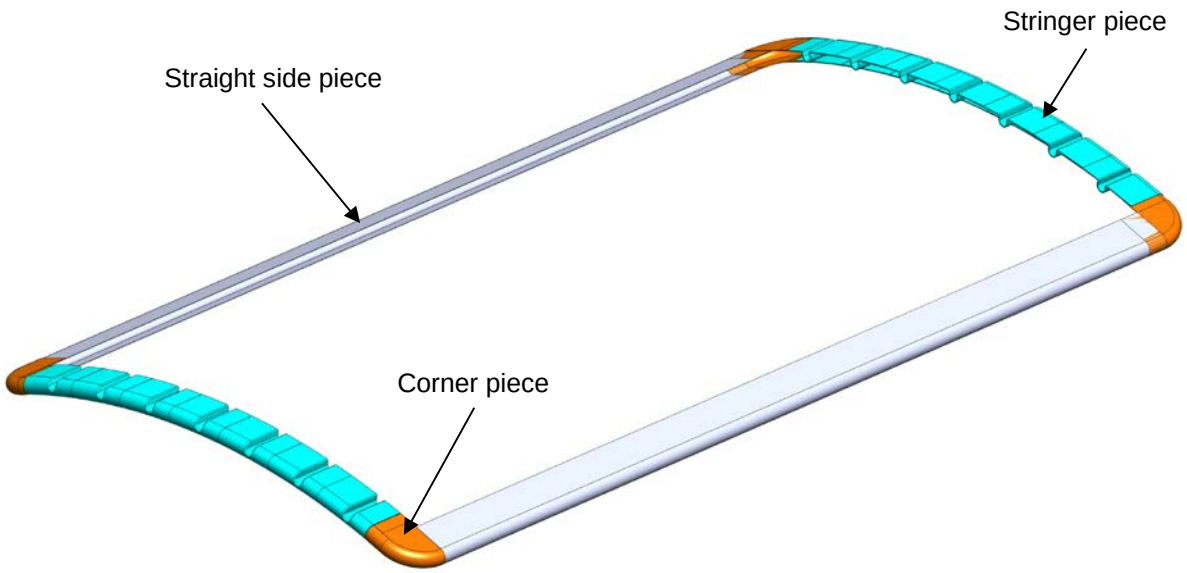

Figure 27. Modular Seal Assembly CAD Rendering

Assembly was performed per engineering drawings found in appendix A. All joints were designed as lap joints with at least 1.5 inches of overlap. Fuel tank sealant 1422-B 1/2 was used to bond the various lap joints together. Fiberglass scrim (McMaster Carr p/n: 9345K4) was used to ensure uniform adhesive thickness. Wooden mandrels were fabricated and used during assembly to maintain the proper shape of the seal, as shown in figure 28. The seal was assembled on the panel to ensure a proper fitment. Each curved side was assembled, and then straight sides and corners were assembled and joined to the curved ends. Teflon tape was used to cover the panel ends and wooden mandrels so that the adhesive would not adhere to these surfaces during seal assembly. A dry fit of the seal assembly was done before applying adhesive to ensure proper fitment. A photo of the dry-fit for one curved edge is shown in figure 29. Weights were used to hold the seal pieces in place during the 24-hour cure period. A single cured curved end is shown in figure 30 and the completely assembled seal is shown in figure 31.

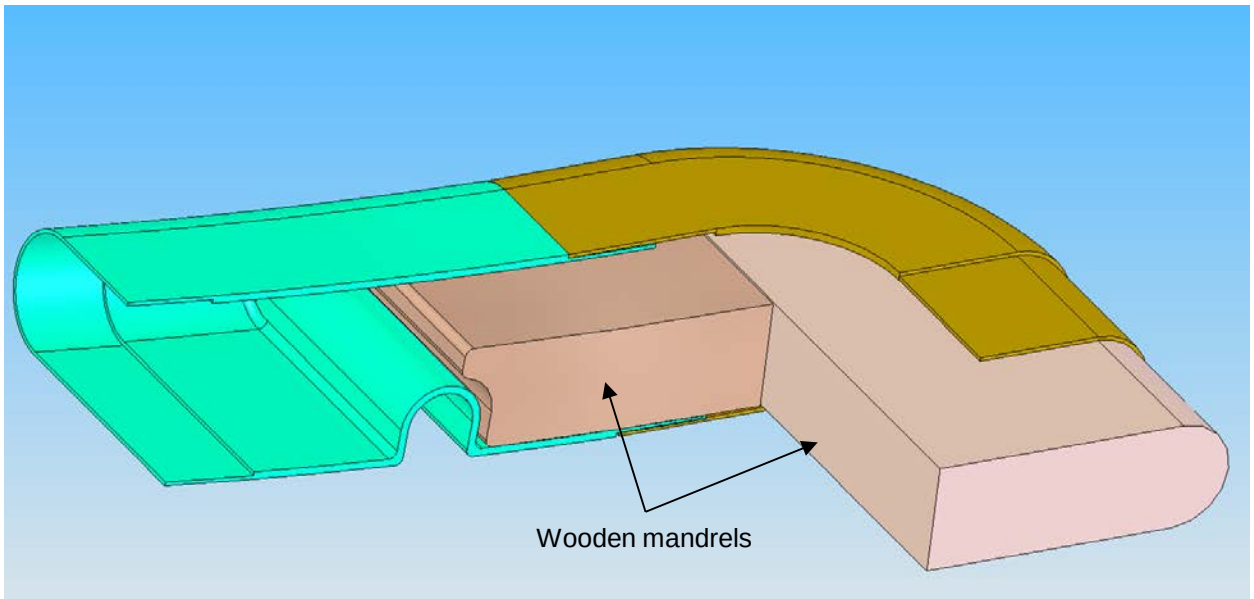

Figure 28. Modular Seal Wooden Mandrels Used During Assembly

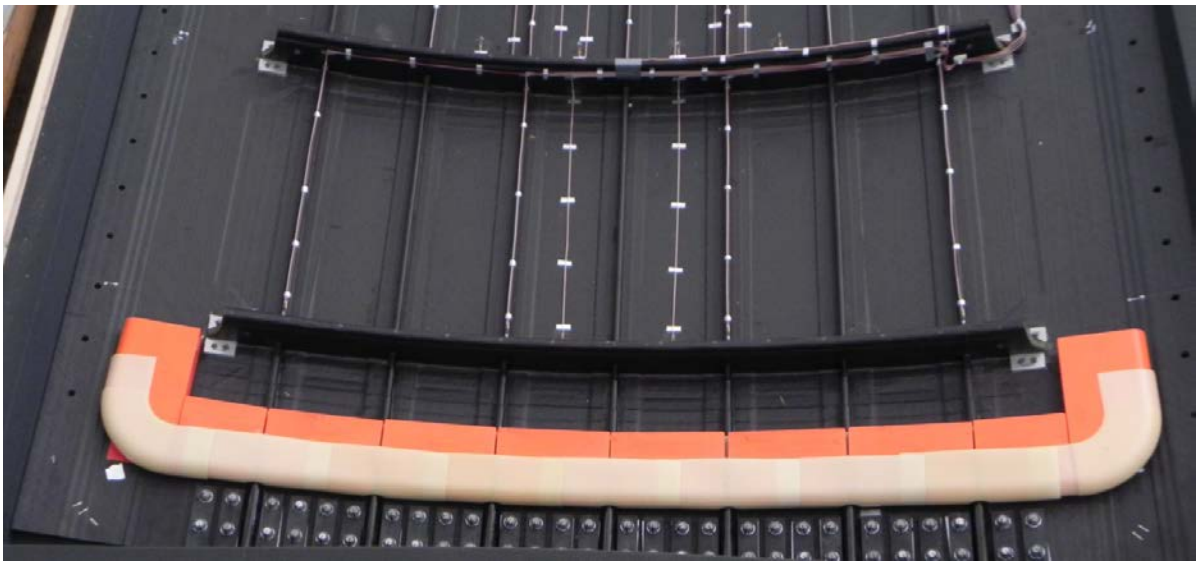

Figure 29. Dry Fit of One Curved End Showing the Seven Stringer Rod Pieces, the Two Corner Pieces, and the Wooden Mandrels

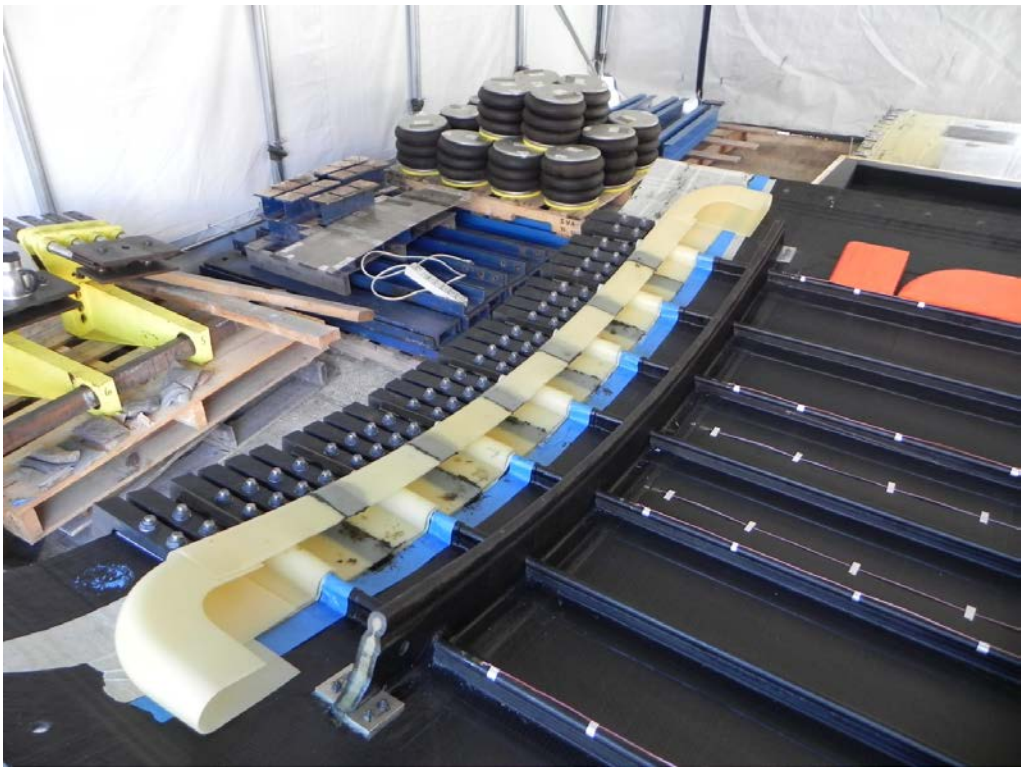

Figure 30. Seal Assembly, Complete Curved End

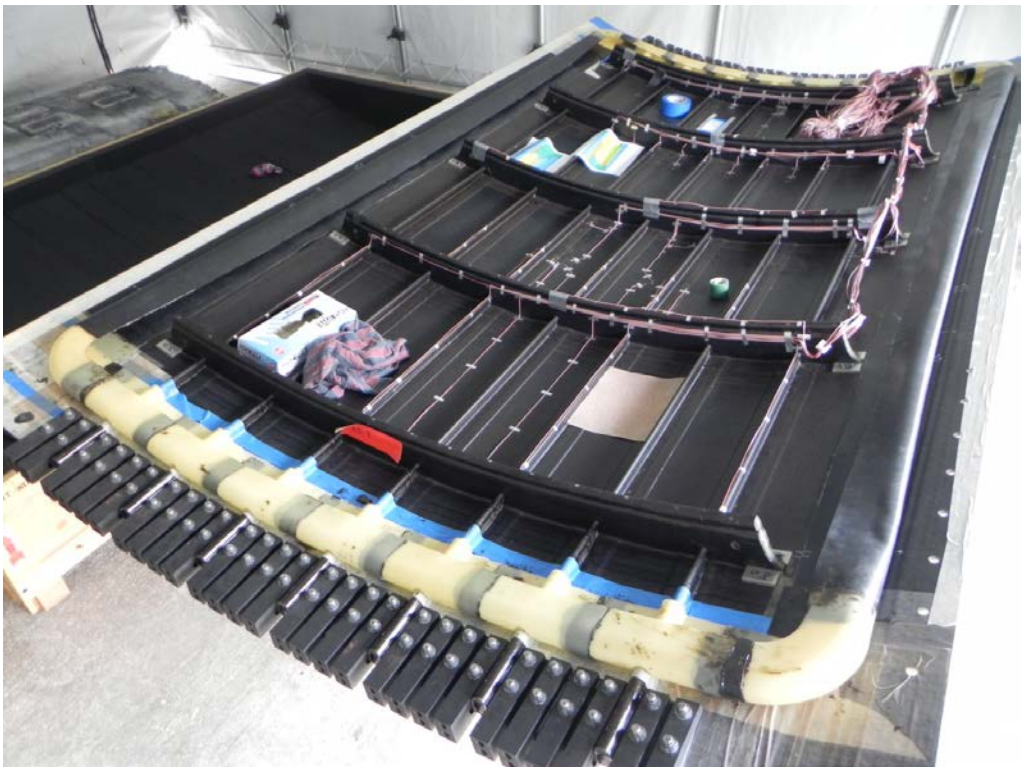

Figure 31. Completed Seal Assembly

The assembled seal was aligned on the panel and marked along the hoop and axial center lines. The seal was then placed on and aligned to the pressure box using these alignment marks. Using the seal strip and seal shim as a guide, the seal was match-drilled in preparation for bolting the seal to the fixture. The seal was then transferred back to the panel, aligned, and bonded to the panel using 1422 B-1/2. After a 24-hour curing period, using clamps to maintain even pressure around the bond line, the seal installation was complete.

PANEL AND AXIAL LOADING MECHANISM INSTALLATION

The angle brackets were installed to support the axial loading structure, as shown in figure 32. The axial loader rested on the angle brackets without bolts fastening it in place so that minimal load would be transferred into the FASTER fixture from the axial loading fixture. The weight of the axial loader and fast sampling rate of the axial load controller make it unlikely that any dynamic failure effects could move the axial loader substantially. Each angle bracket was bolted to the four existing axial loader columns in 10 places, as shown in figure 32. The axial loader columns were aligned before mounting the angle bracket. A template was fabricated for locating the two new holes, which were drilled and tapped.

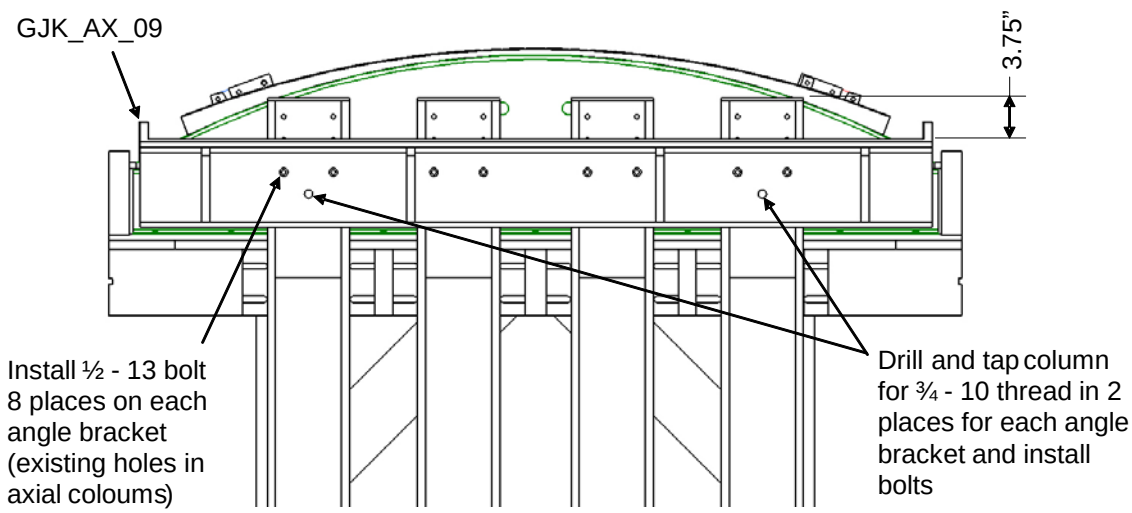

Figure 32. Installation of Angle Brackets

The panel and hydraulic connections were removed from the axial loading mechanism in preparation for panel installation on the fixture. The panel was flipped and hoisted into place on the pressure box using the overhead crane (figure 33(a)). The seal was bonded using 1422 B-1/2 and bolted to the pressure box, and the panel was bolted to the frame loaders, securing it in place (figure 33(b)). Figure 33(c) shows the panel installed on the fixture.

a) Hoisting panel into place

b) Frame loader connection

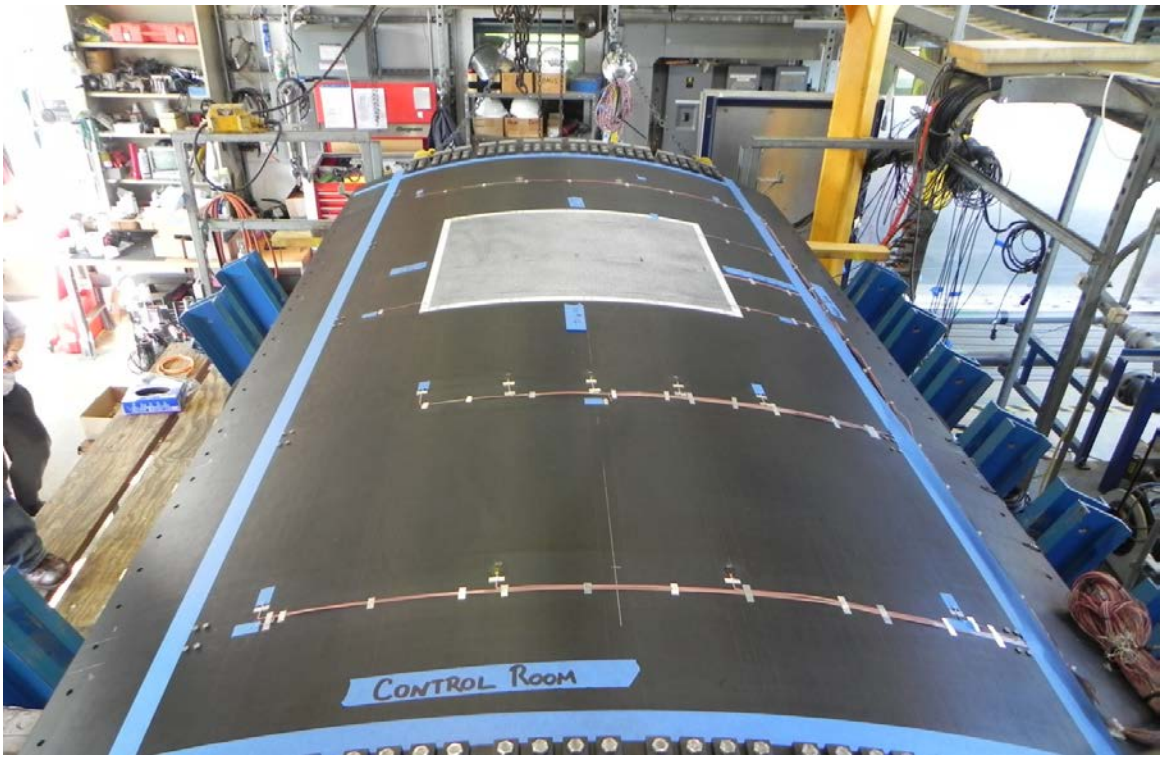

c) Panel installed on the fixture

Figure 33. Panel Installation

The axial loader was installed on the fixture after the panel. The axial loader structure was flipped using the overhead crane and a JLG telehandler lift. The 180° rotation of the fixture about its axial axis was performed in two 90° steps. For the first step, chains were wrapped around the cross beams and connected to chains from the overhead crane center lift point, as shown in figure 34. The fixture was rotated 90° in this lifting configuration and remained stable while the lifting chains were reconfigured for the second step. The chains were then wrapped around two of the four beam columns and connected to the overhead crane end points, as shown in figure 35. The JLG lift forks were positioned below the same two beam columns and used to initiate the rotation by lifting and tilting the fixture. Once the fixture was rotated approximately

30° from completion, the load was transferred to the crane and the JLG lift forks were removed. The crane was used to lower the fixture to the ground, completing the rotation.

a) Start of First 90° Rotation b) End of First 90° Rotation

Figure 34. First Step in Flipping the Axial Loading Fixture: (a) Start of First 90° Rotation and (b) End of First 90° Rotation

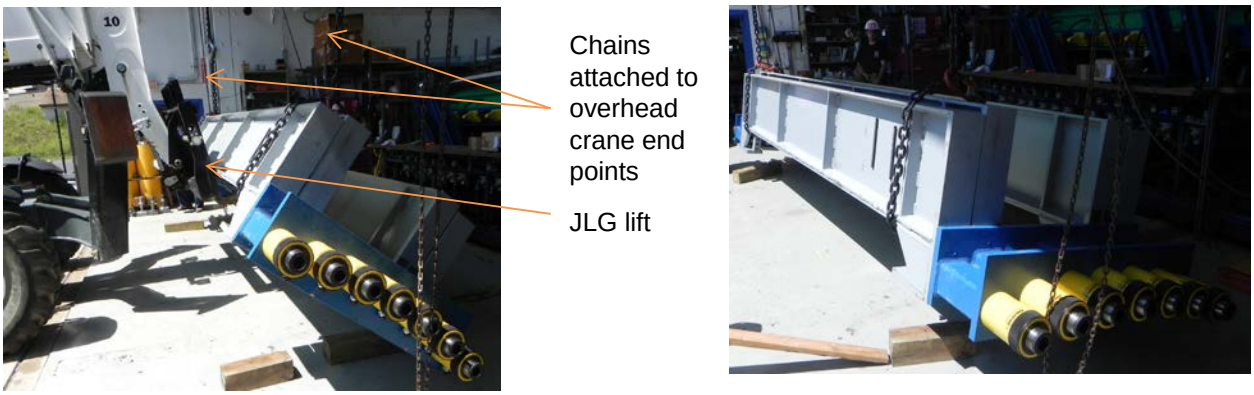

a) Start of Second 90° Rotation b) End of Second 90° Rotation

Figure 35. Second Step in Flipping the Axial Loading Fixture: (a) Start of Second 90° Rotation and (b) End of Second 90° Rotation

The axial loading fixture was placed on the FASTER fixture using the end point overhead crane attached to eye bolts at the four corners of the axial loading fixture with chains, as shown in figure 36(a). After raising the axial loading fixture to a height that provided ample clearance over the fixture, it was carefully maneuvered and lowered into place, where it rested on the angle brackets and shims, as shown in figure 36(b and c). The vertical jacking bolts in the angle brackets, shown in figure 36(c), were used to align the axial loader.

The fixture is shown in figure 37 with all modifications completed. Scaffolding and a ladder were put in place to provide access to the panel for inspections during the test program.

a) Lifting Configuration

b) Positioning above fixture

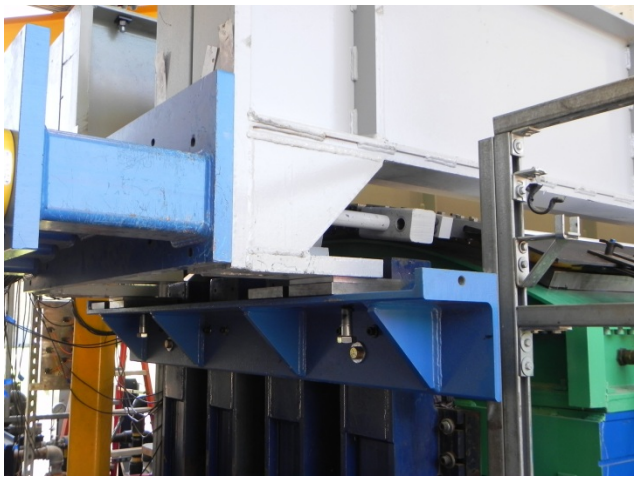

c) Detail of axial loader placement on fixture

Figure 36. Installation of the Axial Loading Fixture on the FASTER Fixture: (a) Lifting Configuration, (b) Positioning Above Fixture, and (c) Detail of Axial Loader Placement on Fixture

Figure 37. The FASTER Fixture With PRSEUS Modification Completed

SUMMARY

In summary, the Full-Scale Aircraft Structural Test Evaluation and Research (FASTER) fixture was modified to accommodate a curved pultruded rod stitched efficient utilized structure (PRSEUS) panel test. The axial load capacity was increased by 840% using a hydraulic standalone system. The new axial load system was integrated with the existing FASTER control computer. The frame loaders were modified with a track system to slide freely in the axial direction. A modular seal was designed and installed. The testing was successfully run and the fixture modifications performed as designed. Results from the test are reported in reference 2.

REFERENCES

1. Bakuckas, J.G., "Full-Scale Testing of Fuselage Structure Containing Multiple Cracks," DOT/FAA/AR-01/46, July 2002.

2. Bergan, A.C. and Bakuckas, J.G., "Full-Scale Test of an Advanced Stitched Efficient Unitized Structural Concept Panel," DOT/FAA/TC-14/25, January 2015.

3. Linton, K., Neal, A., Mills, G., Velicki, A., and P. Thrash, "Design, Analysis, and Fabrication of a Curved PRSEUS Panel," December 2010.

APPENDIX A—ENGINEERING DRAWINGS

This appendix contains the engineering drawings for the fixture modification. The drawings are grouped by the portion of the modification they to which they pertain.

Figure A-1 is the fixture assembly drawing, which shows the fixture modified for the PRSEUS curved panel test.

SEAL SHIM ENGINEERING DRAWINGS

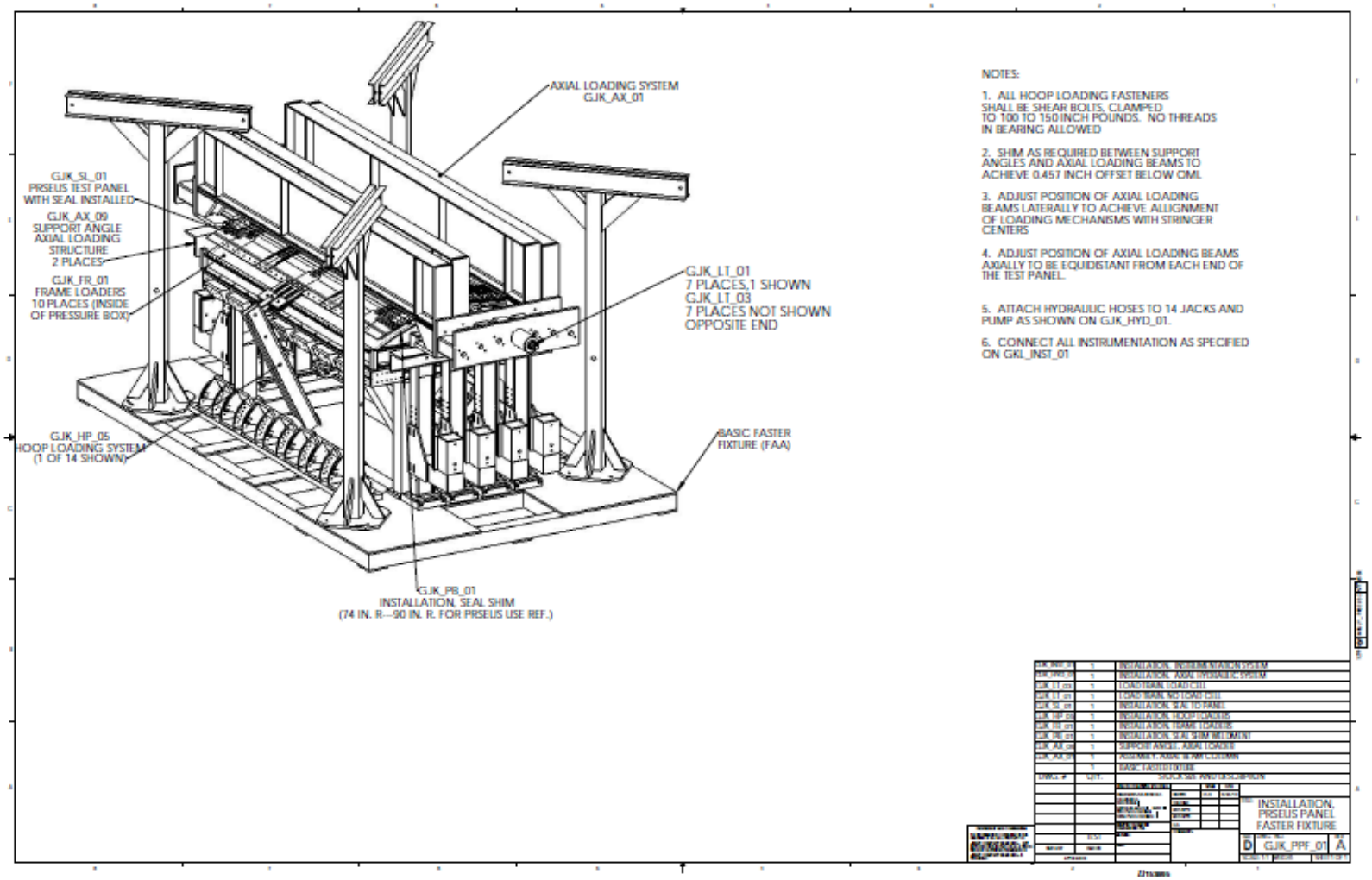

Figure A-1. Fixture Modified for the PRSEUS Curved Panel Test

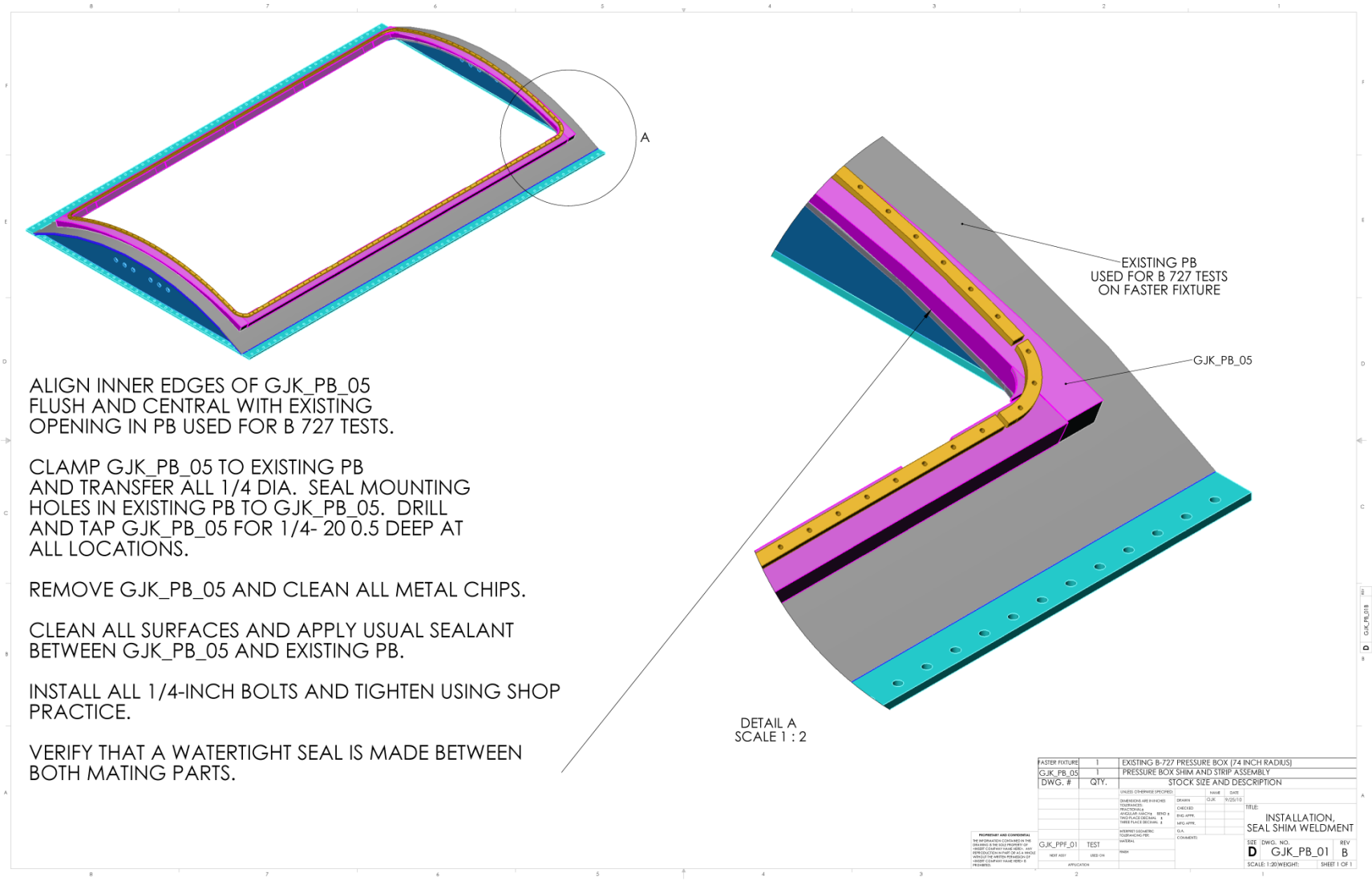

Figure A-2. Pressure Box—Installation, Seal Shim Weldment (a quantity of 1 was used)

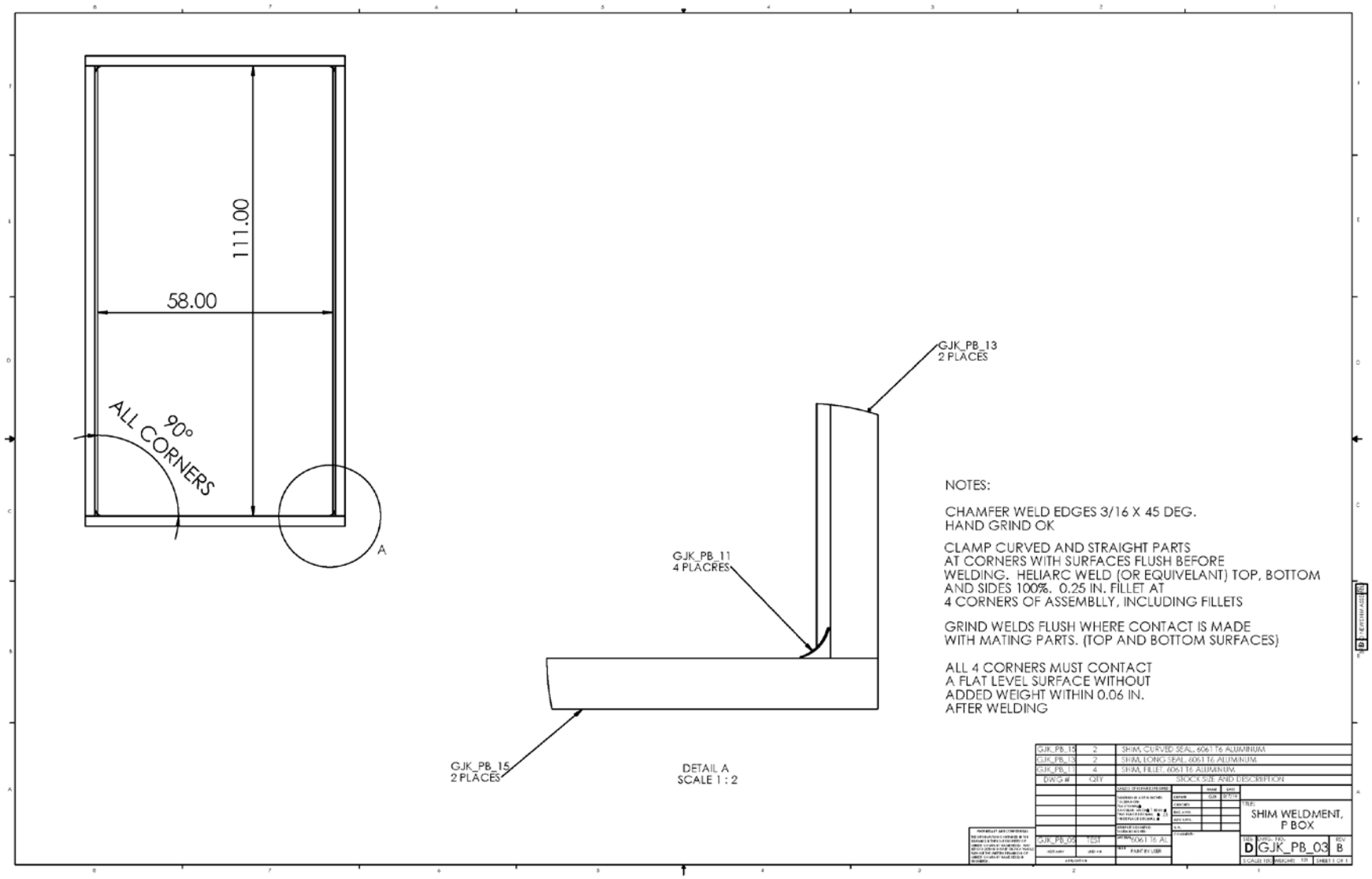

Figure A-3. Pressure Box—Shim Weldment, Pressure Box (a quatity of 1 was used)

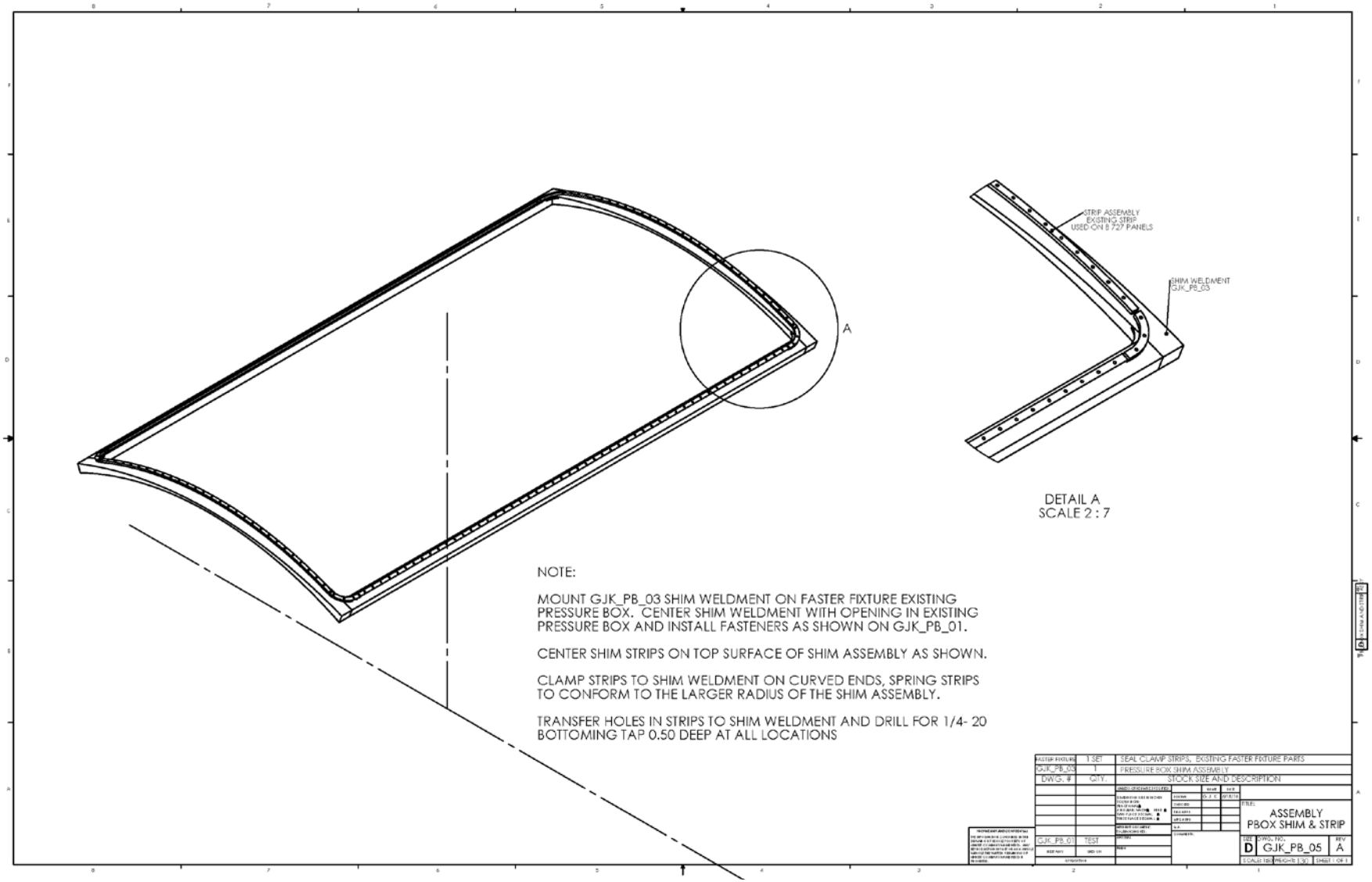

Figure A-4. Pressure Box—Assembly, Pressure Box Shim and Strip (a quantity of 1 was used)

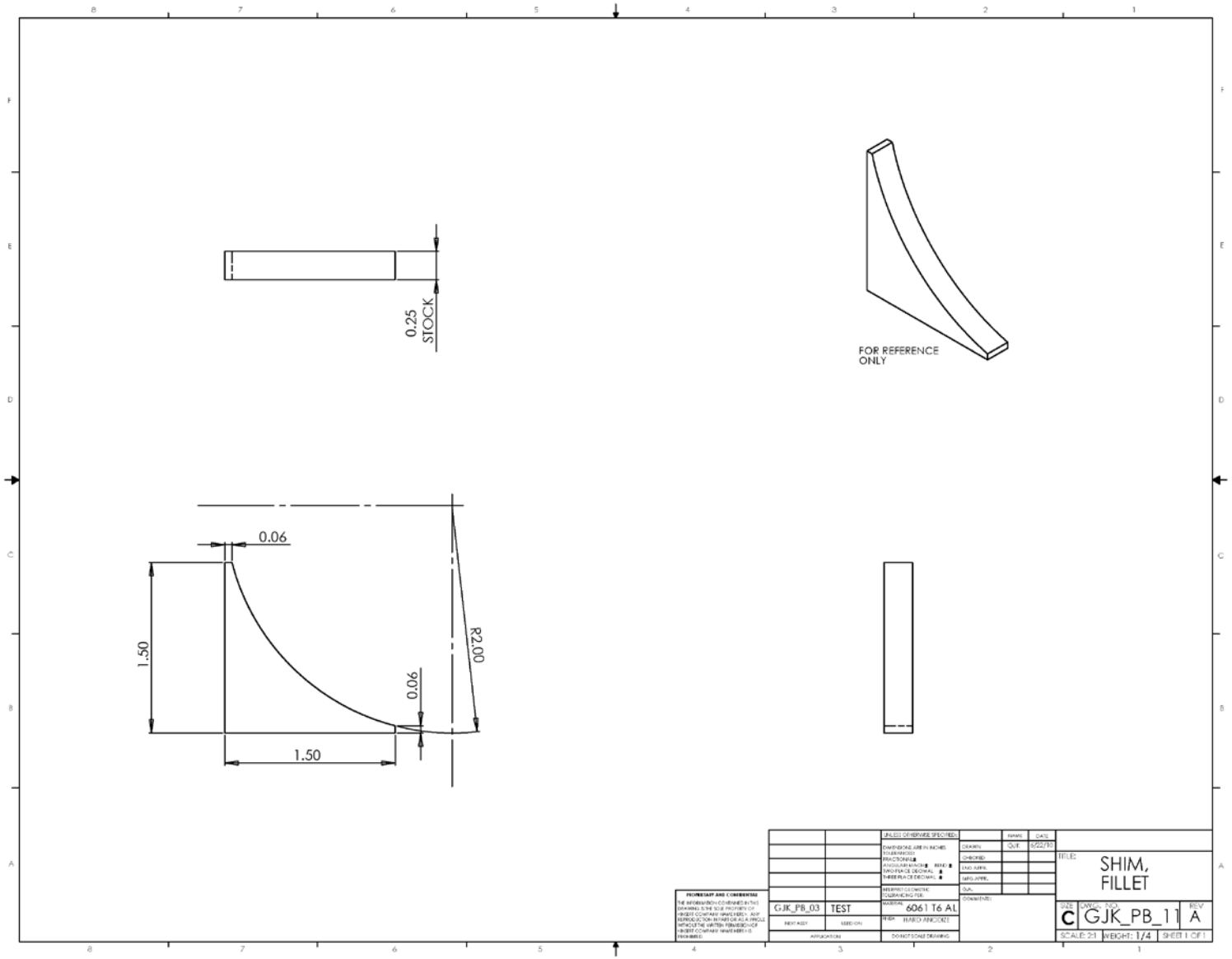

Figure A-5. Pressure Box—Shim, Filler (a quantity of 4 was used)

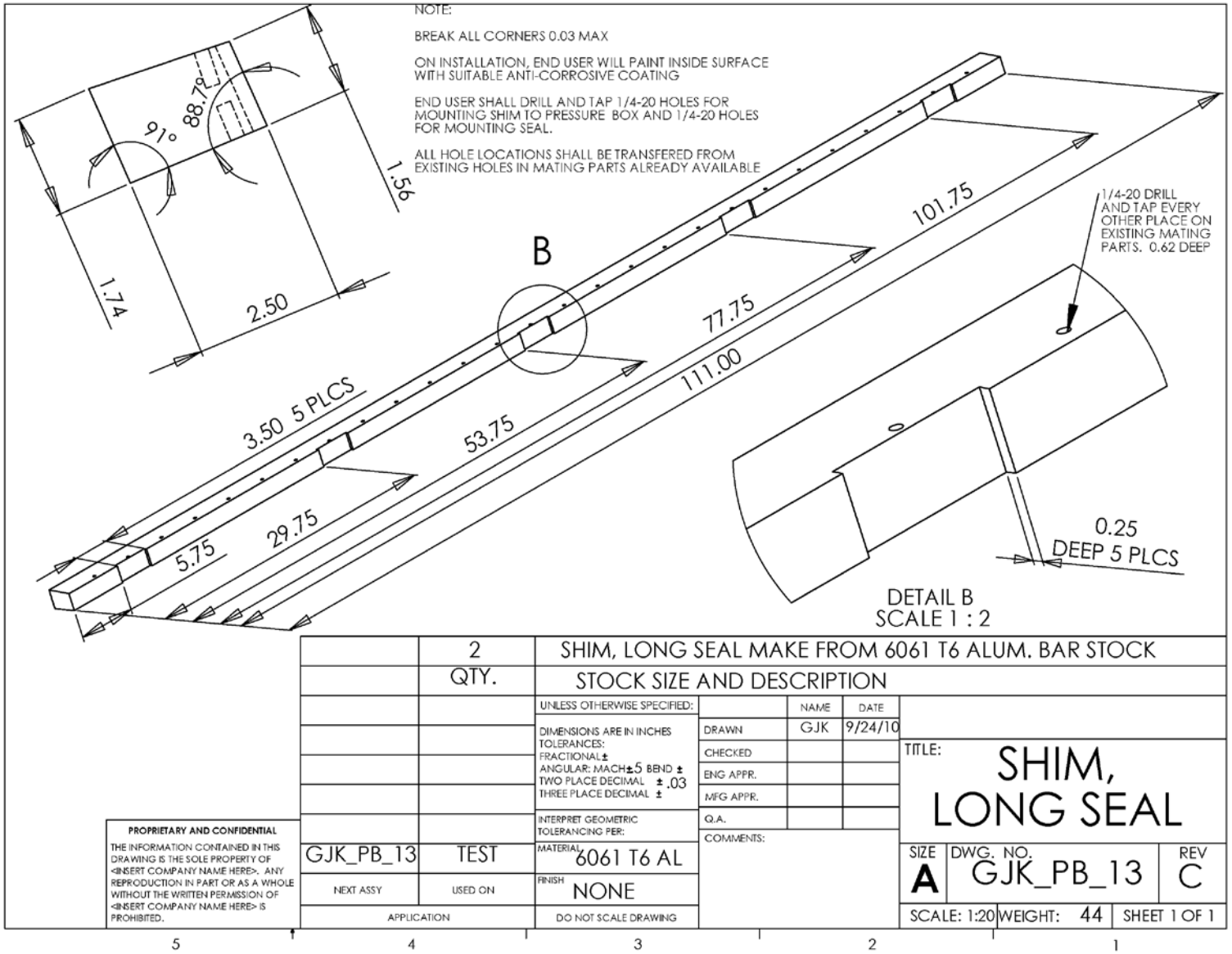

Figure A-6. Pressure Box—Shim, Long Seal (a quantity of 2 was used)

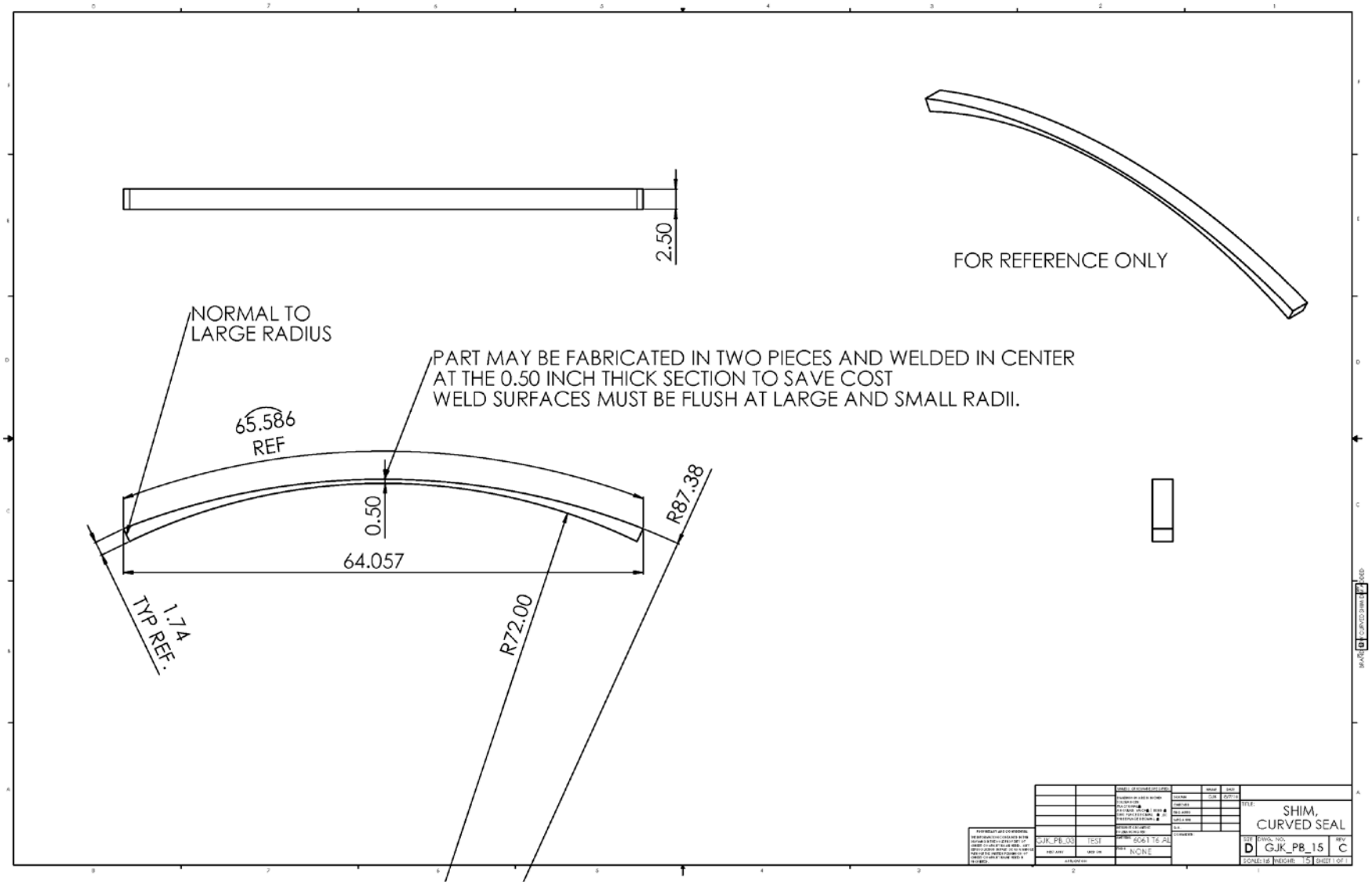

Figure A-7. Pressure Box—Shim, Curved Seal (a quantity of 2 was used)

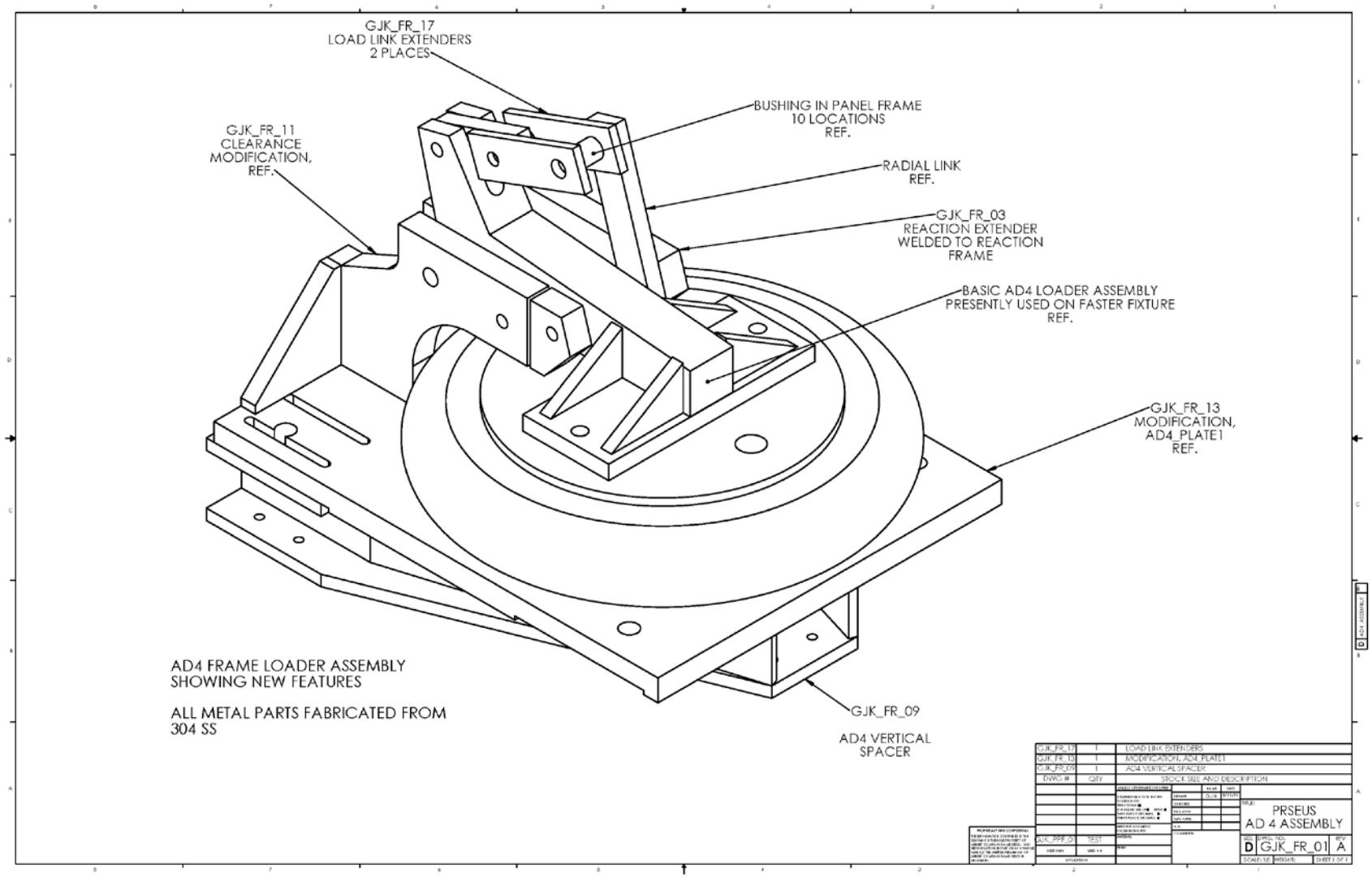

Figure A-8. Frame Loader—PRSEUS AD4 Assembly (a quantity of 12 was used)

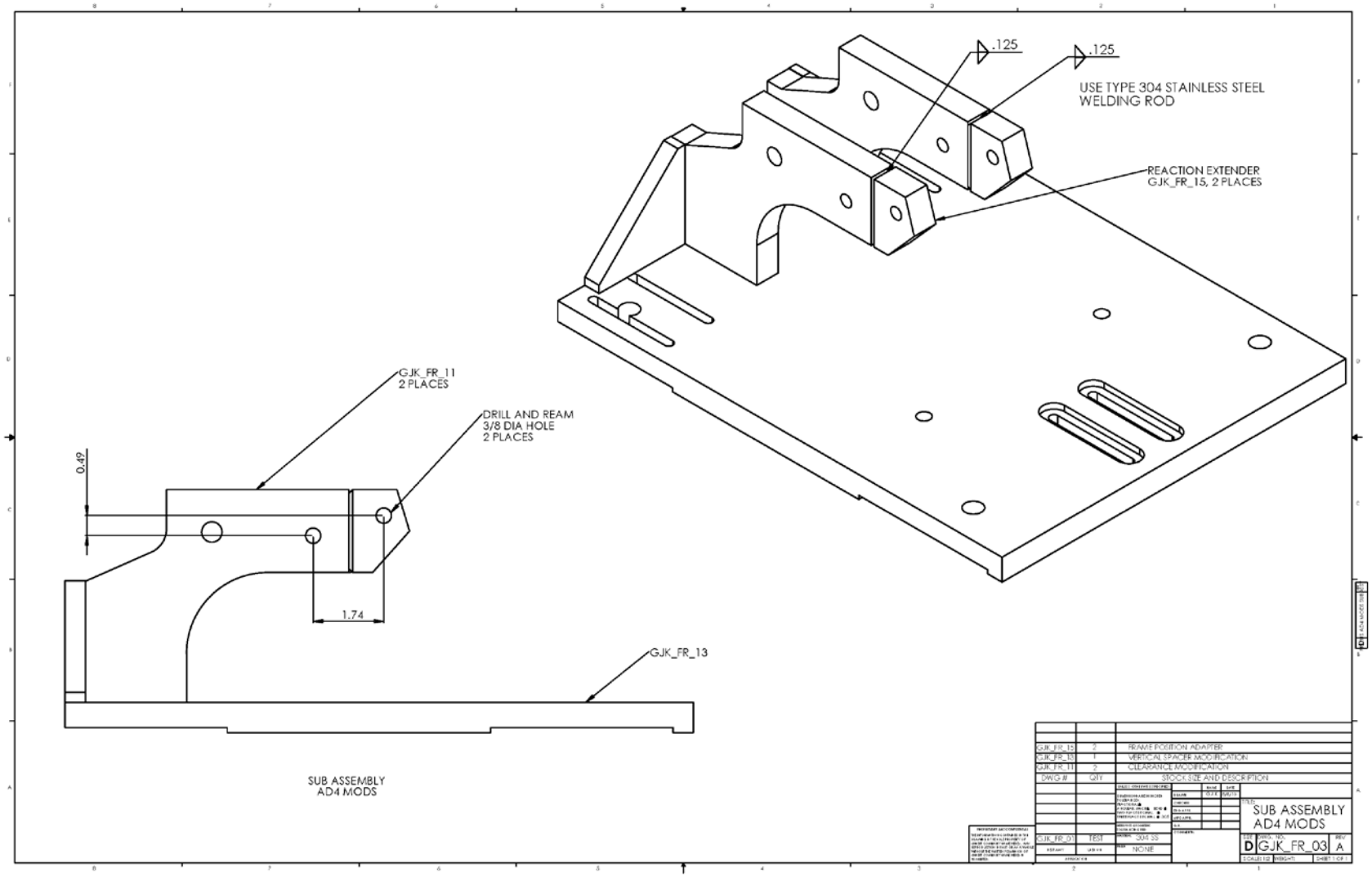

Figure A-9. Frame Loader—Subassembly AD4 Mods (a quantity of 12 was used)

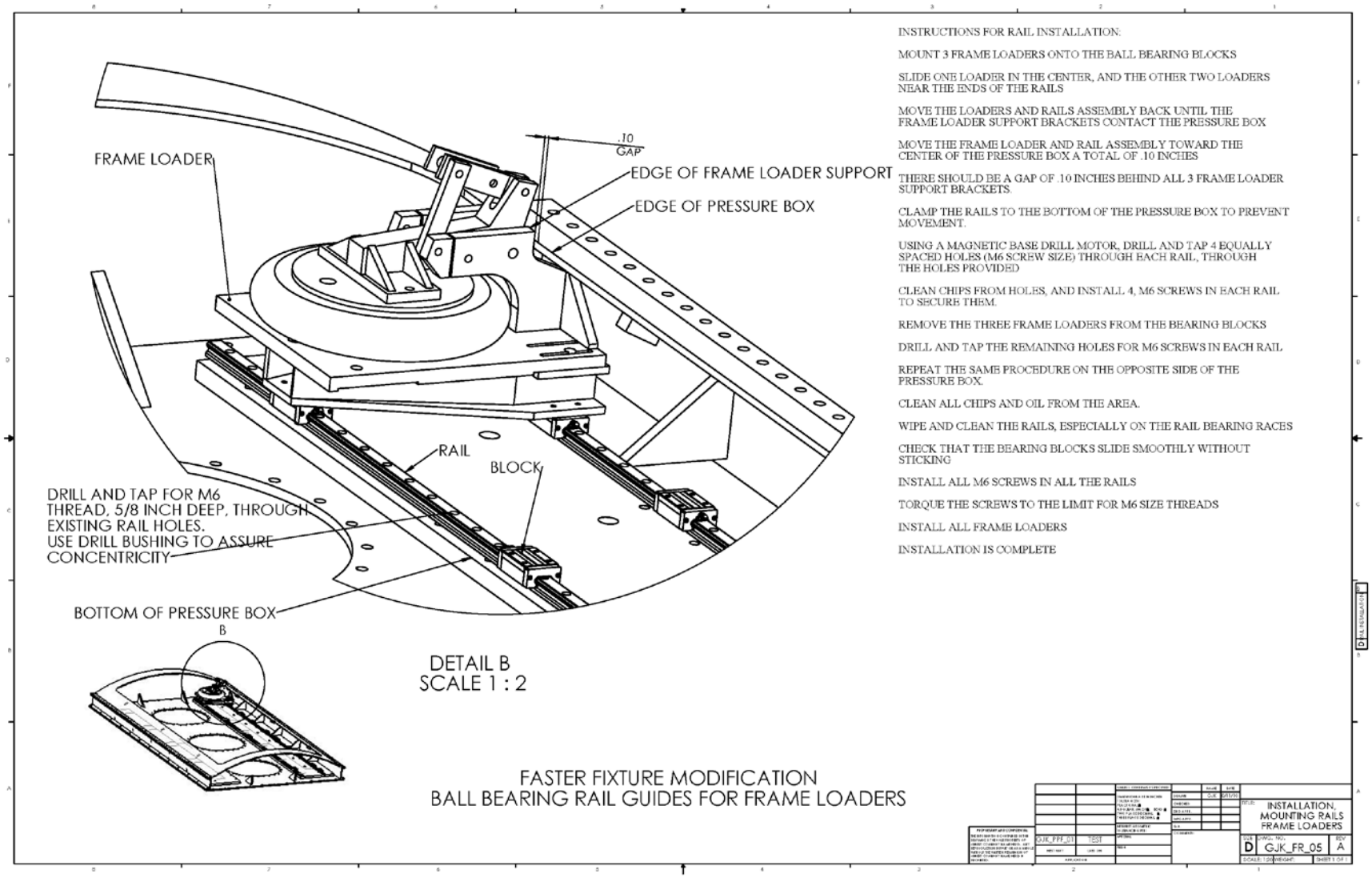

Figure A-10. Frame Loader—Installation, Mounting Rails Frame Loaders (a quantity of 12 was used)

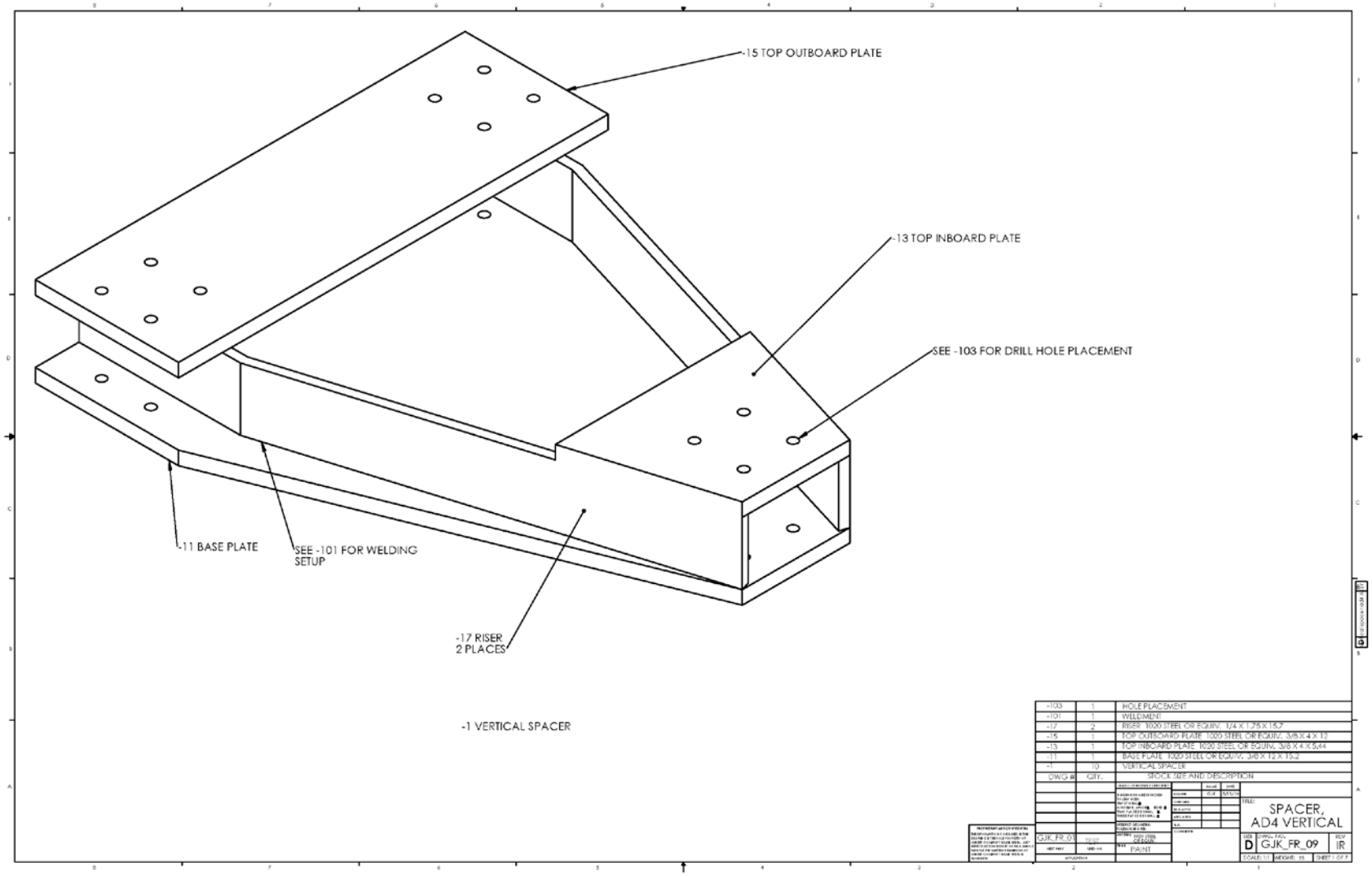

Figure A-11. (a) Frame Loader—Spacer, AD4 Vertical (a quantity of 10 was used)

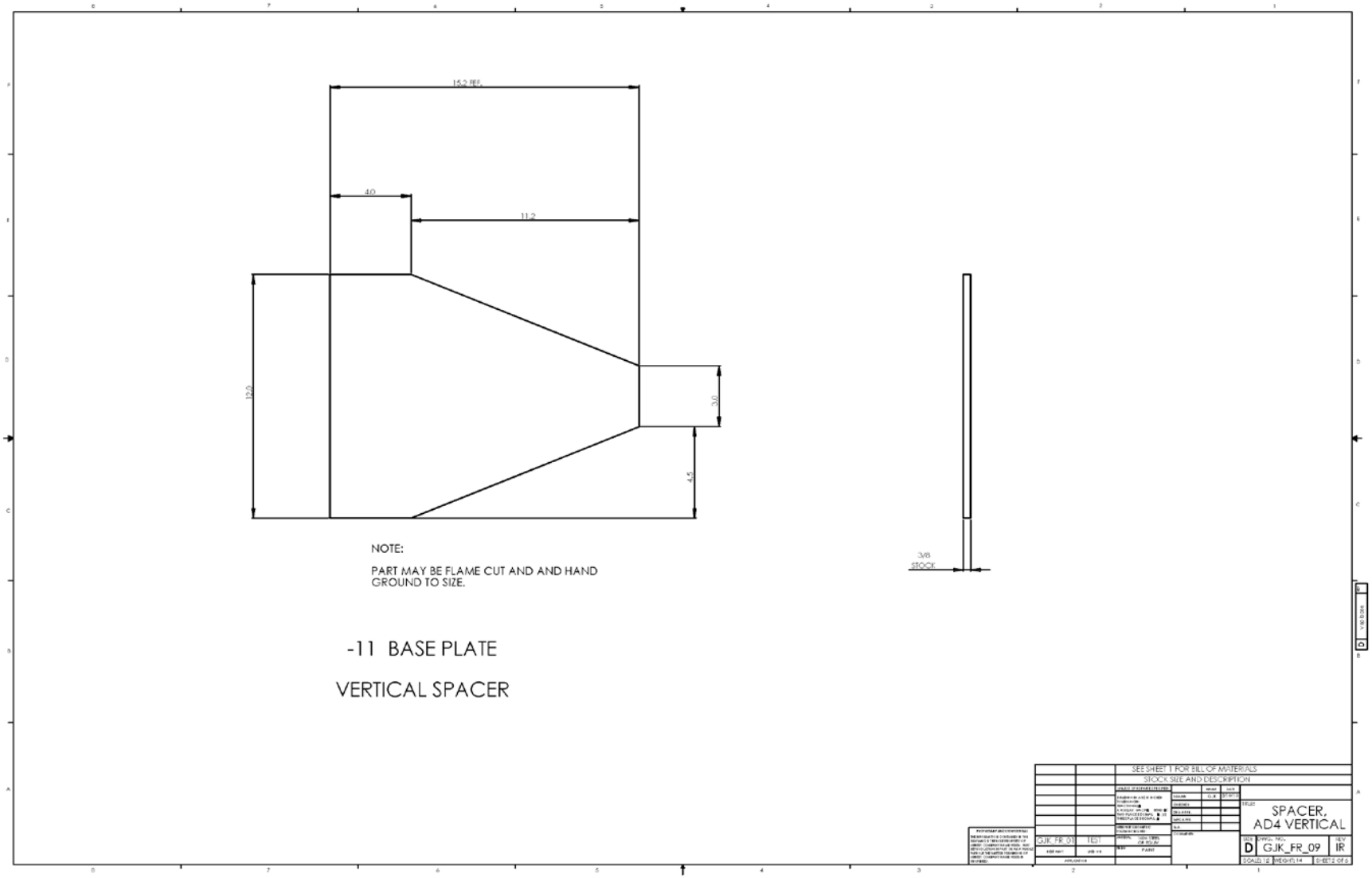

Figure A-11. (b) Base Plate (-11)

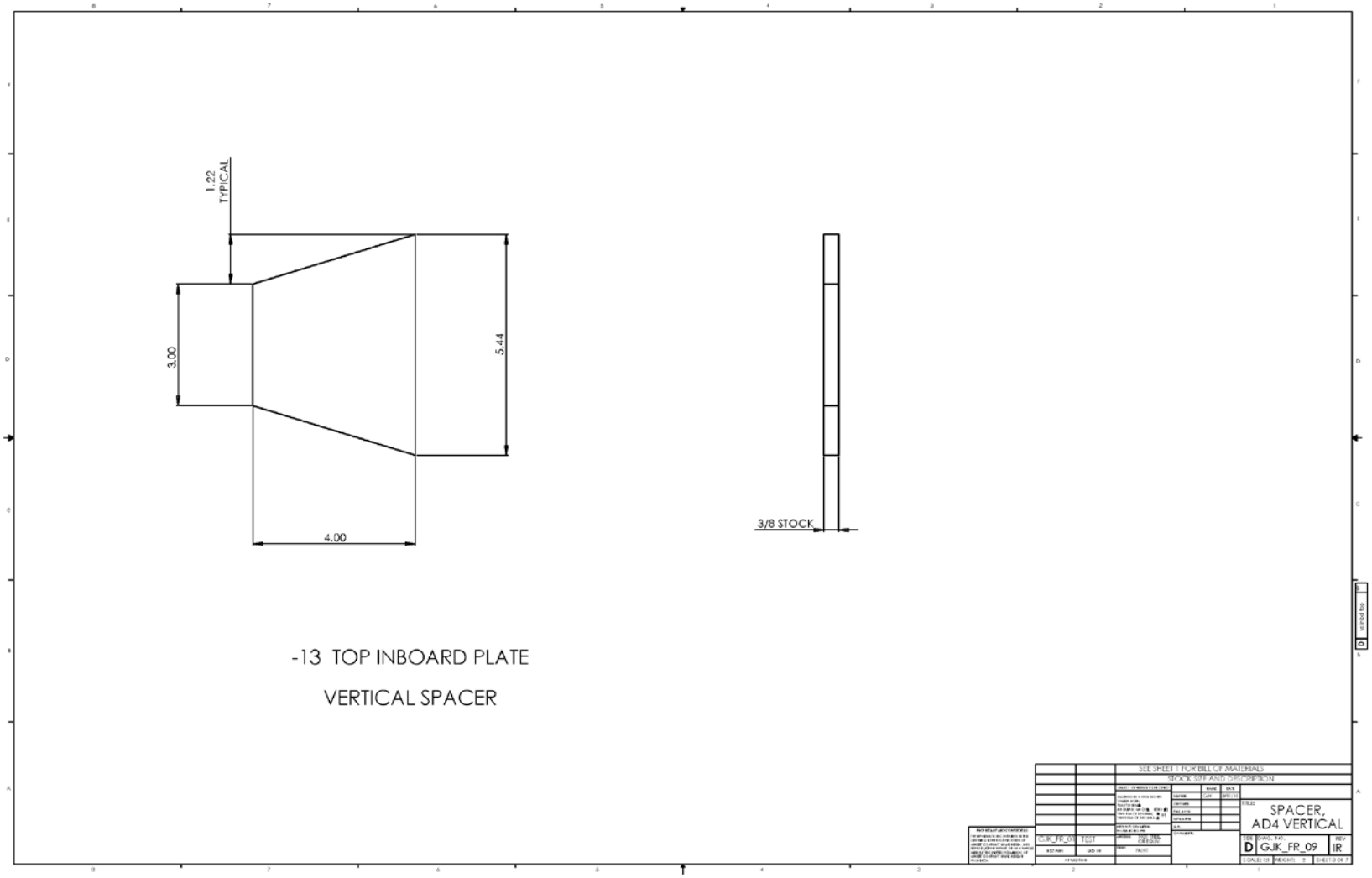

Figure A-11. (c) Top Inboard Plate (-13)

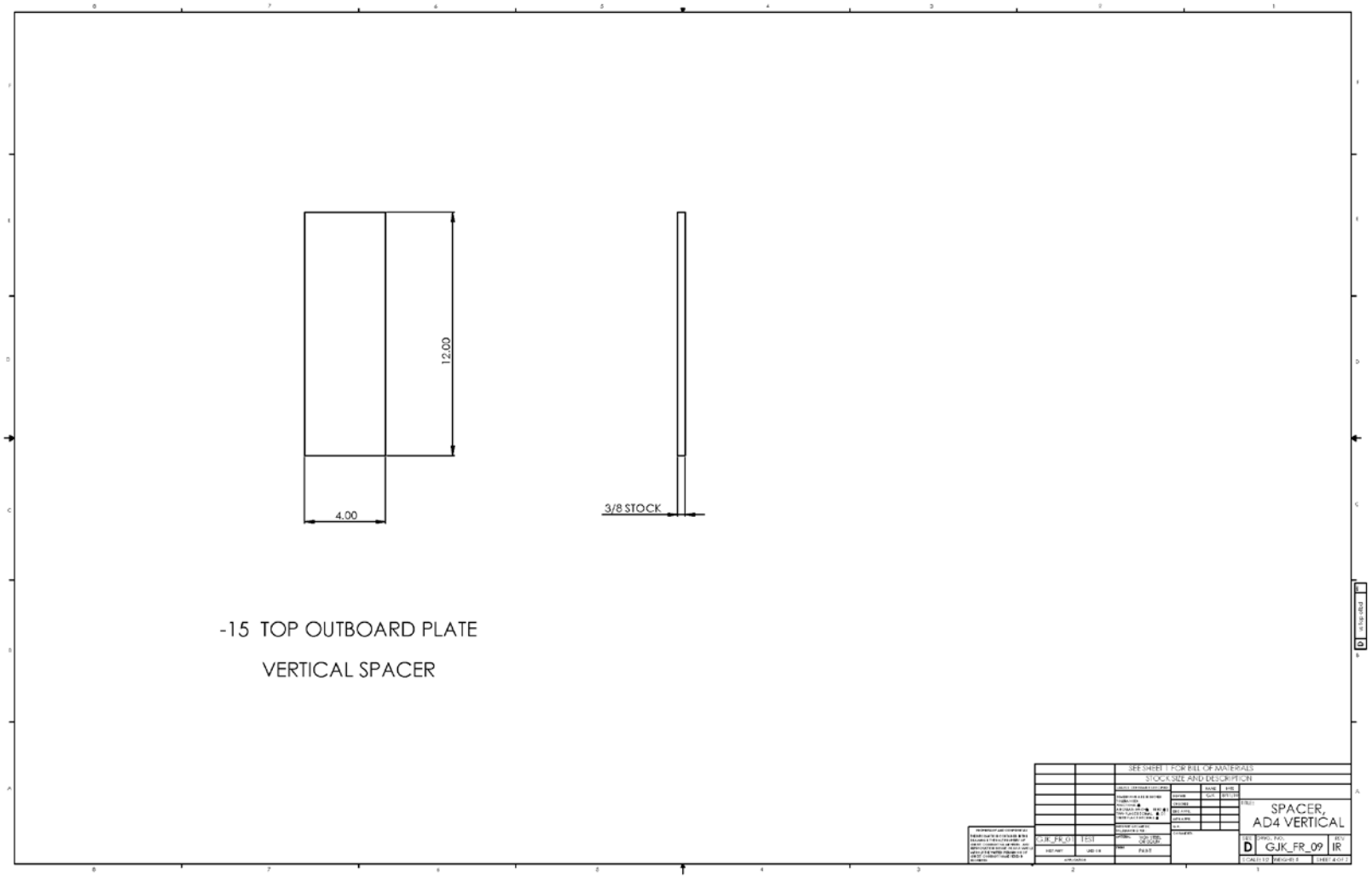

Figure A-11. (d) Top Outboard Plate (-15)

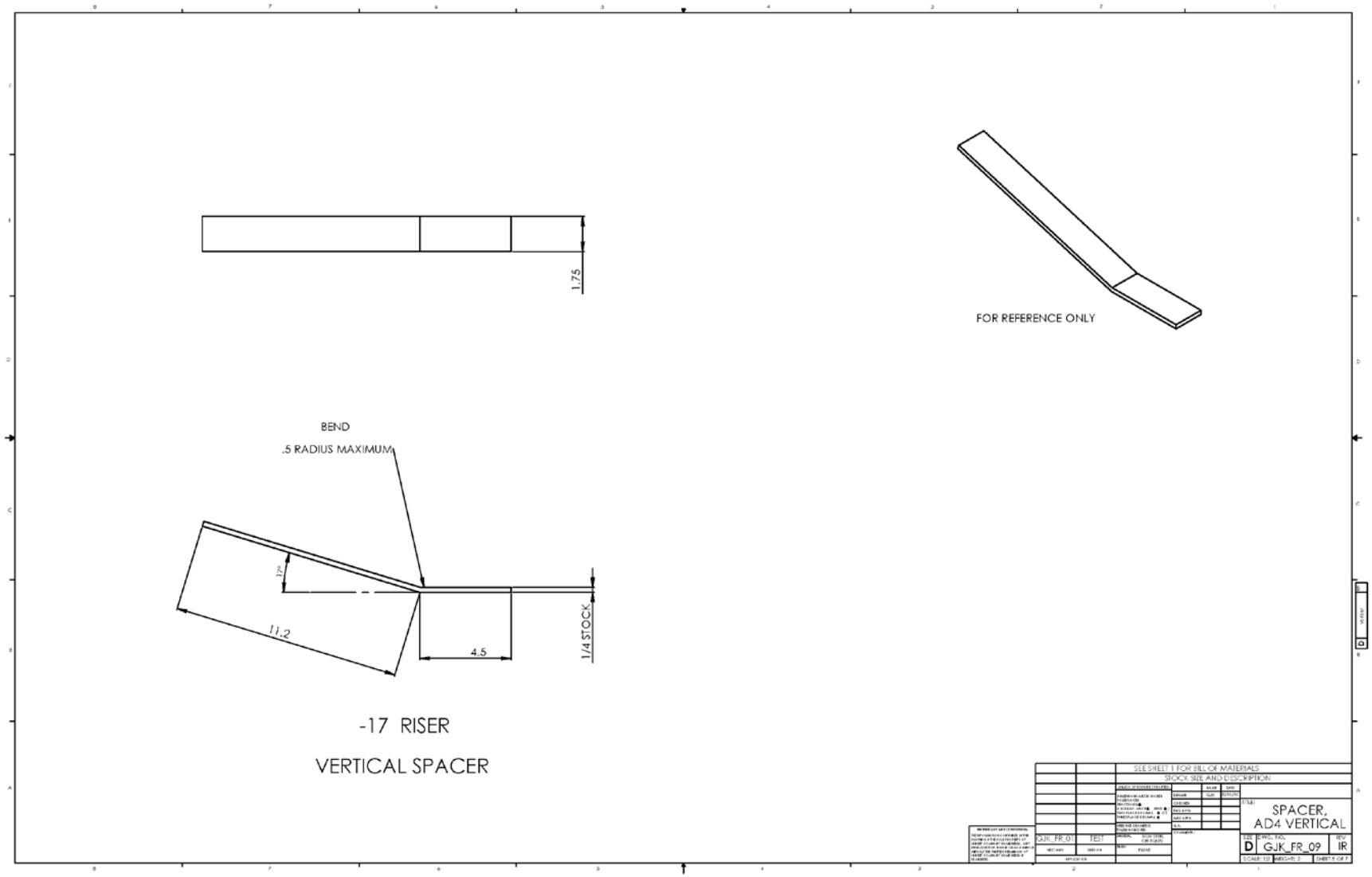

Figure A-11. (e) Rizer (-17)

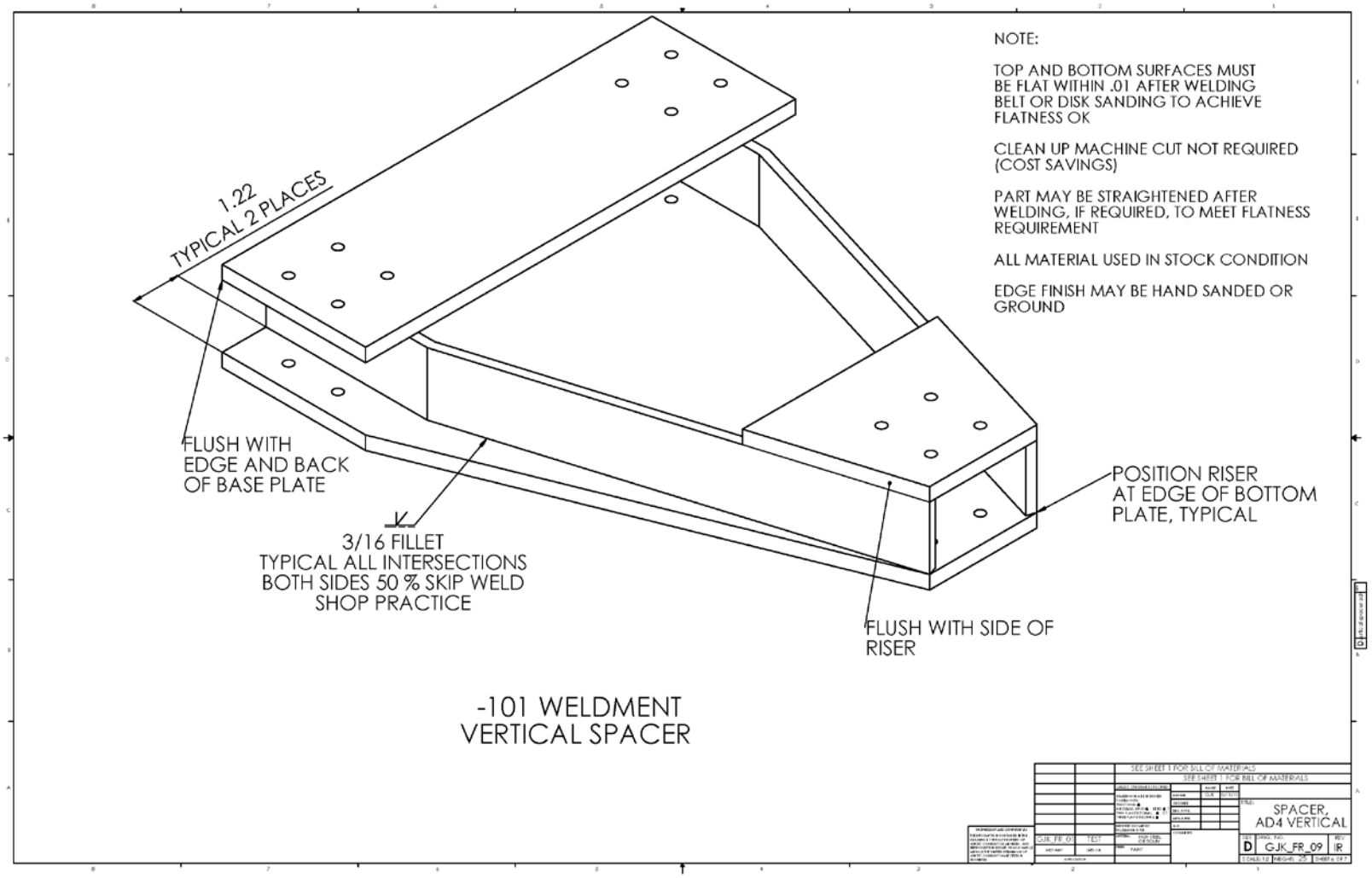

Figure A-11. (f) Weldment (-101)

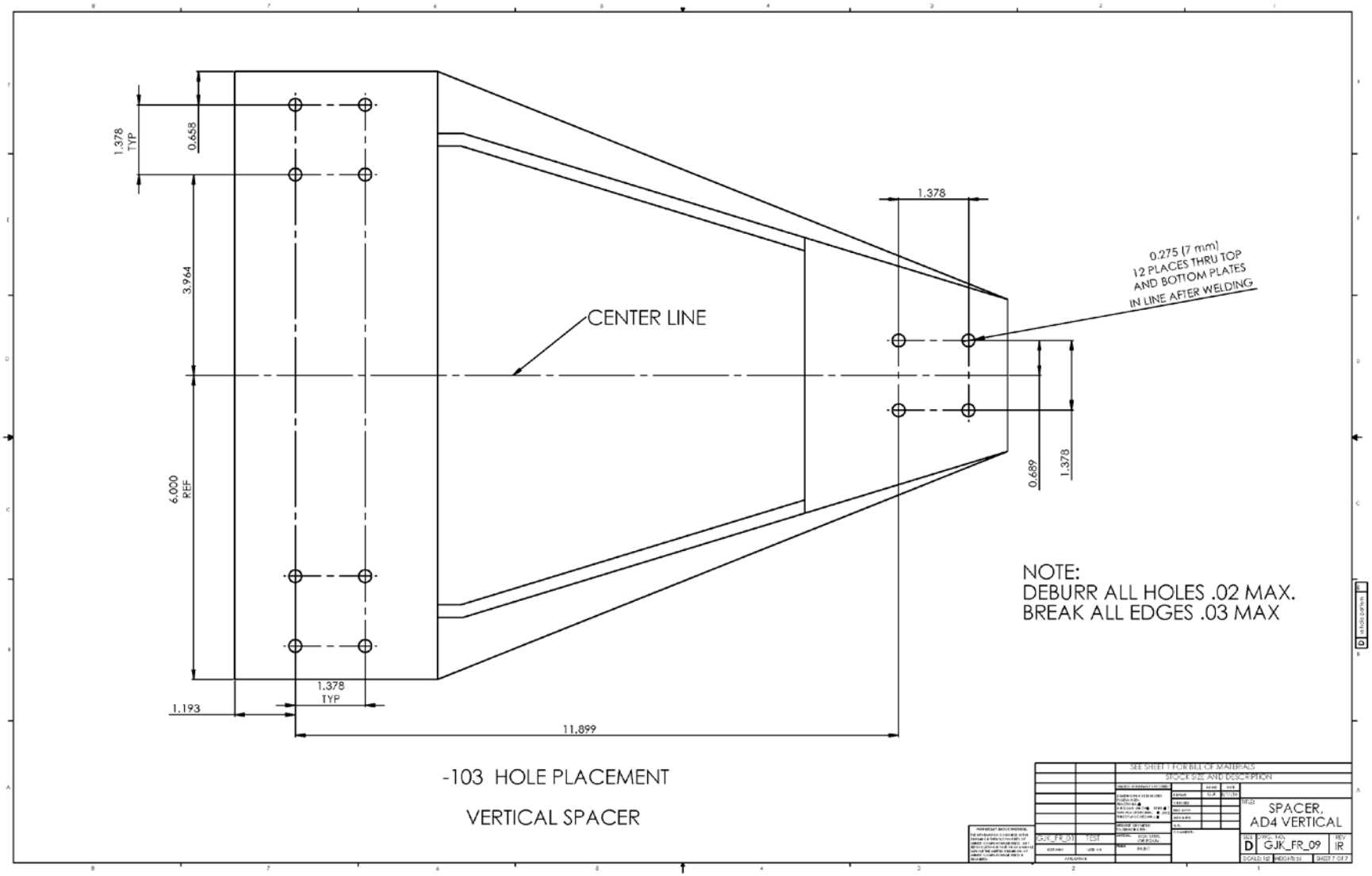

Figure A-11. (g) Hole Placement (-103)

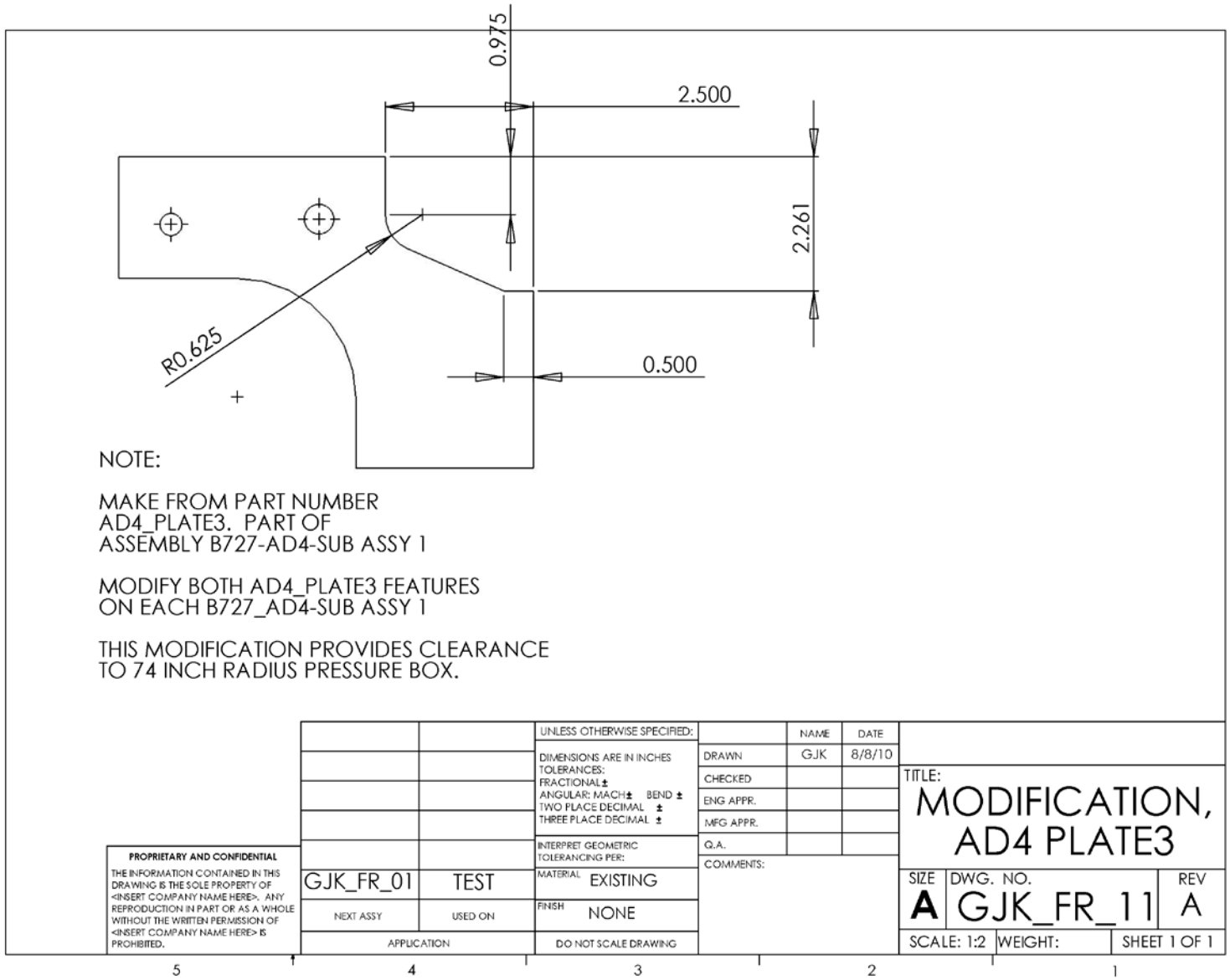

Figure A-12. Frame Loader—Modification, AD4_Plate 3 (A quantity of 12 was used)

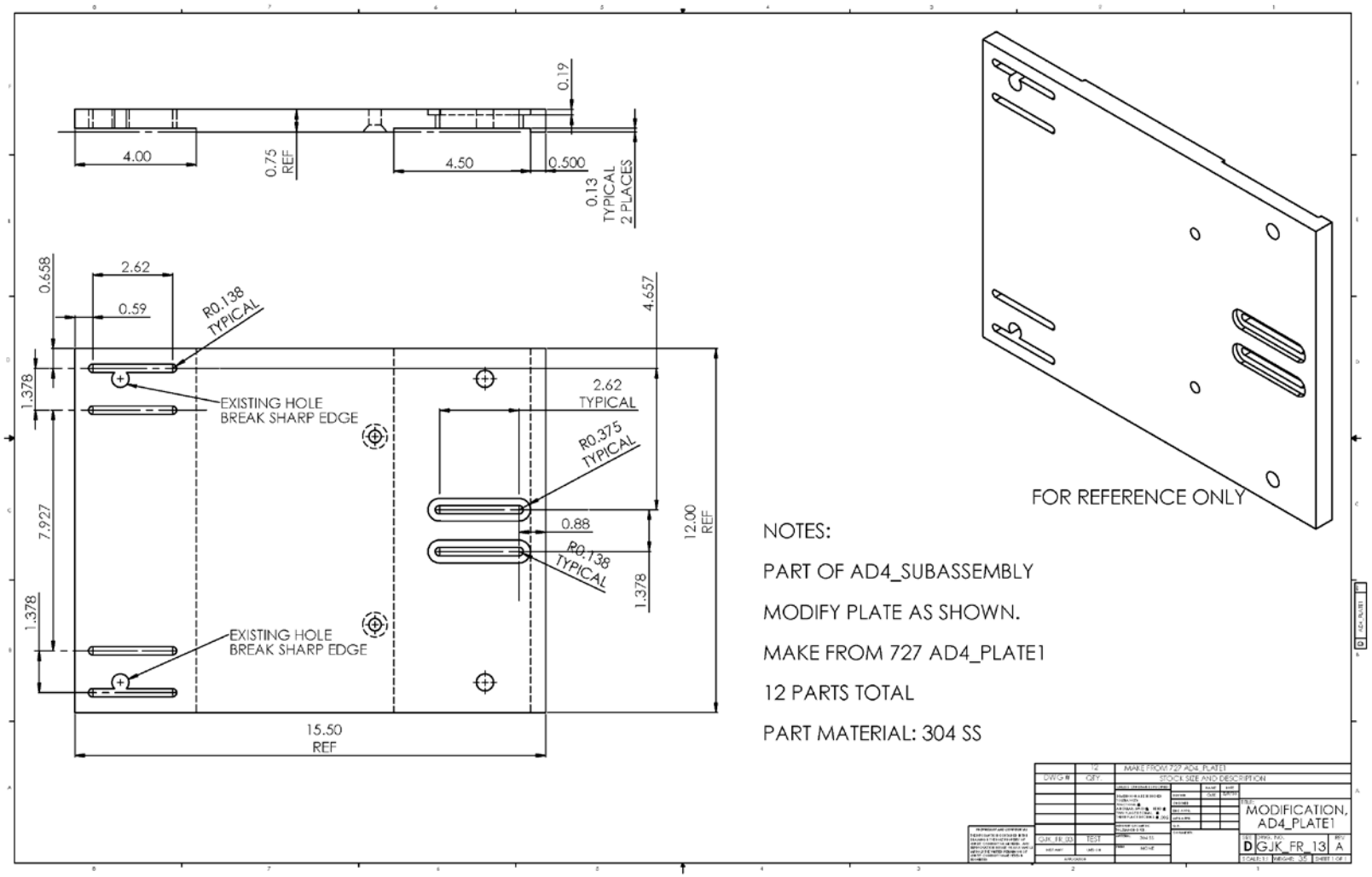

Figure A-13. Frame Loader—Modification, AD4_Plate 1 (a quantity of 12 was used)

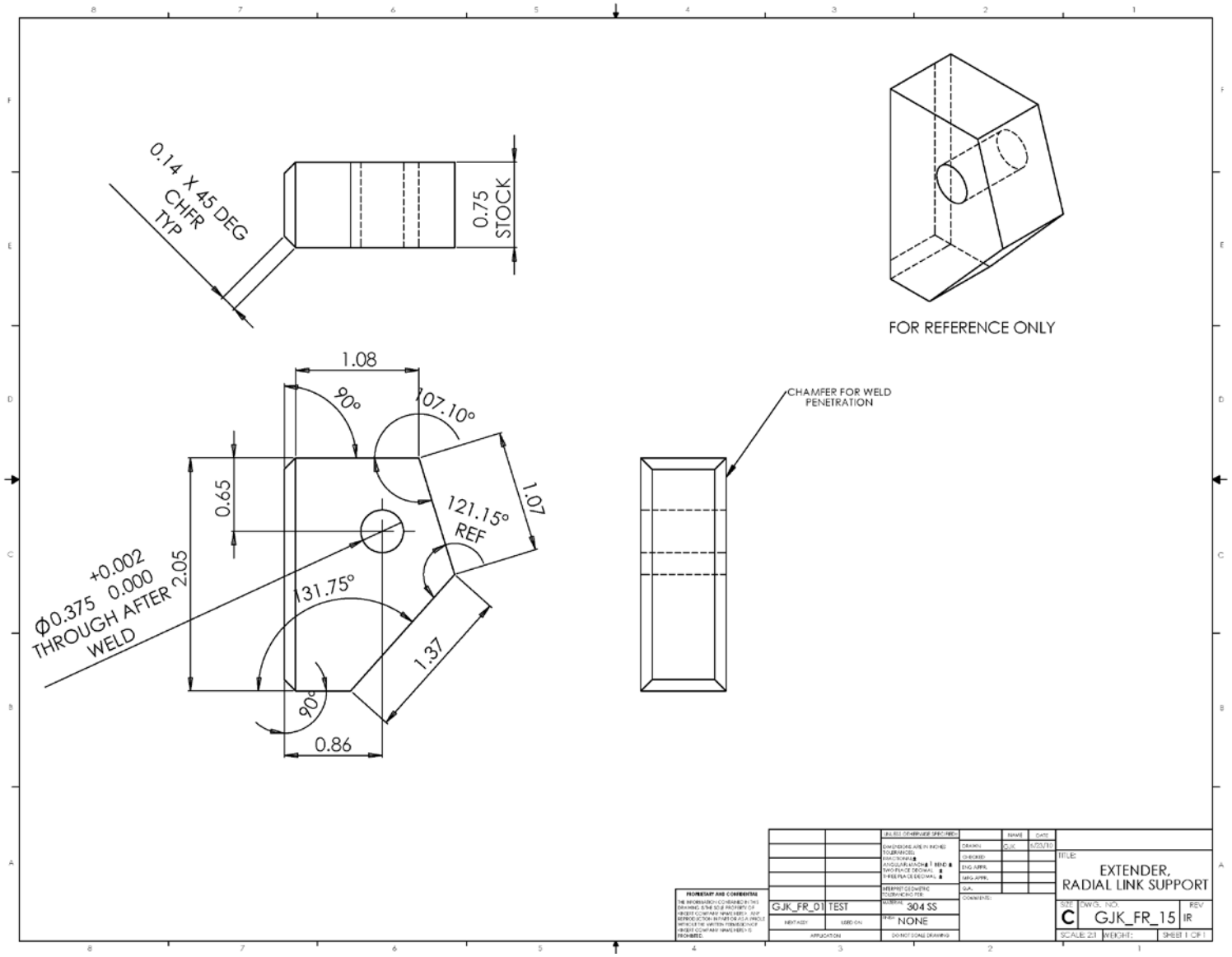

Figure A-14. Frame Loader—Extender, Radial Link Support (a quantity of 24 was used)

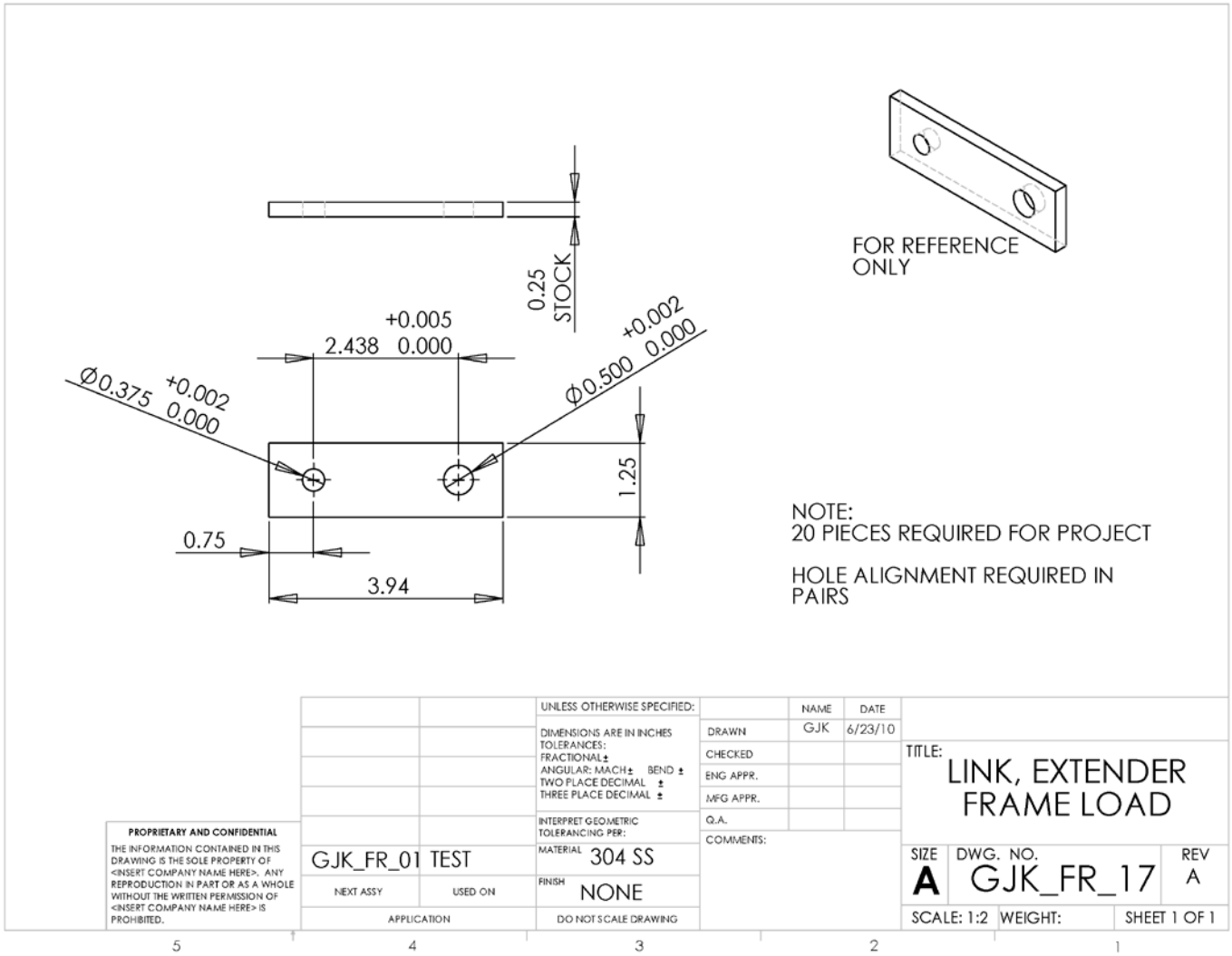

Figure A-15. Frame Loader—Link, Extender, Frame Load (a quantity of 24 was used)

The part shown in figure A-15 was modified for the as-built condition. The hole spacing was designed as 2.438 inch and built as 2.313 inch.

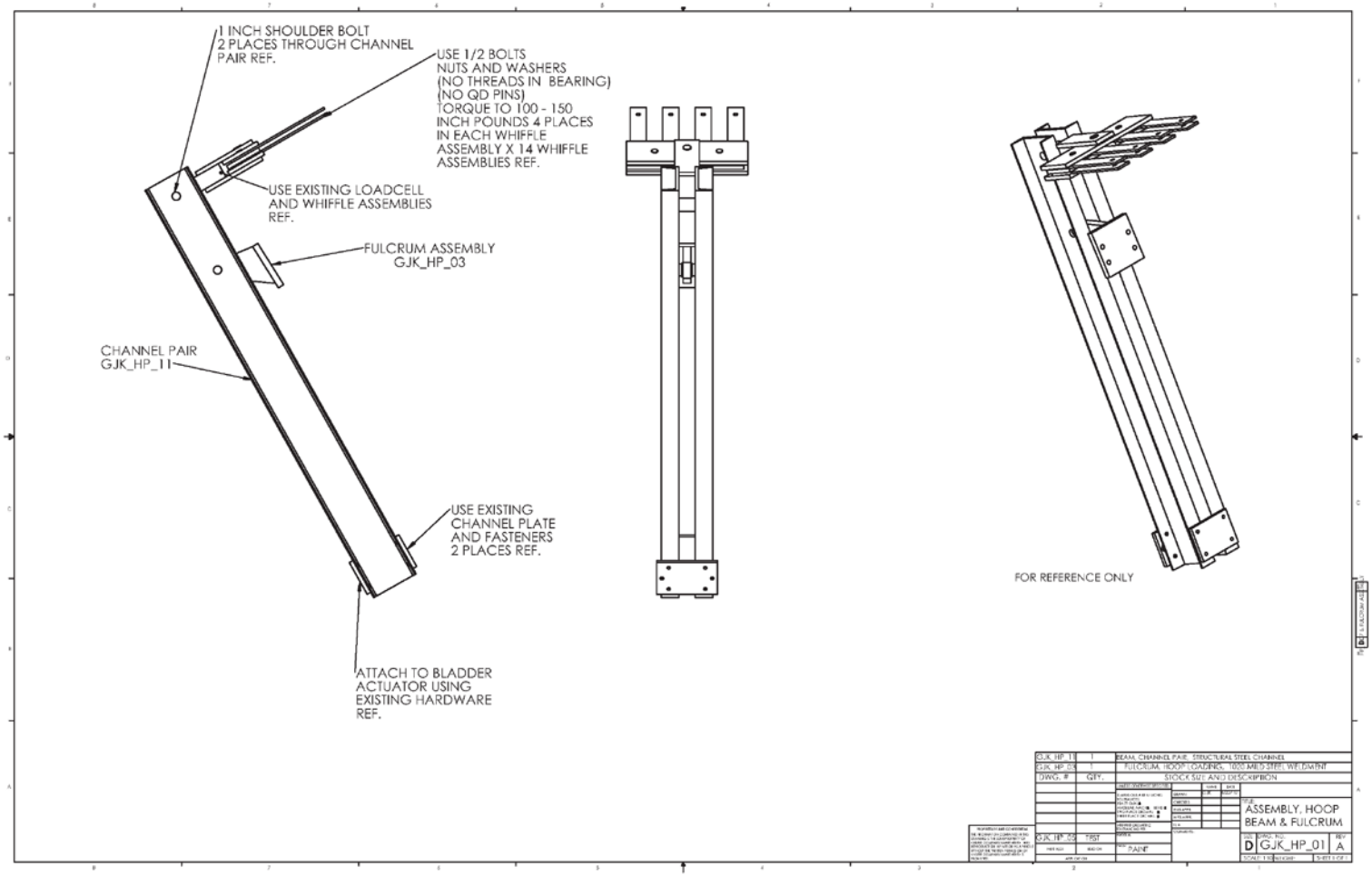

Figure A-16. Hoop Loader—Assembly, Hoop Beam, and Fulcrum (a quantity of 14 was used)

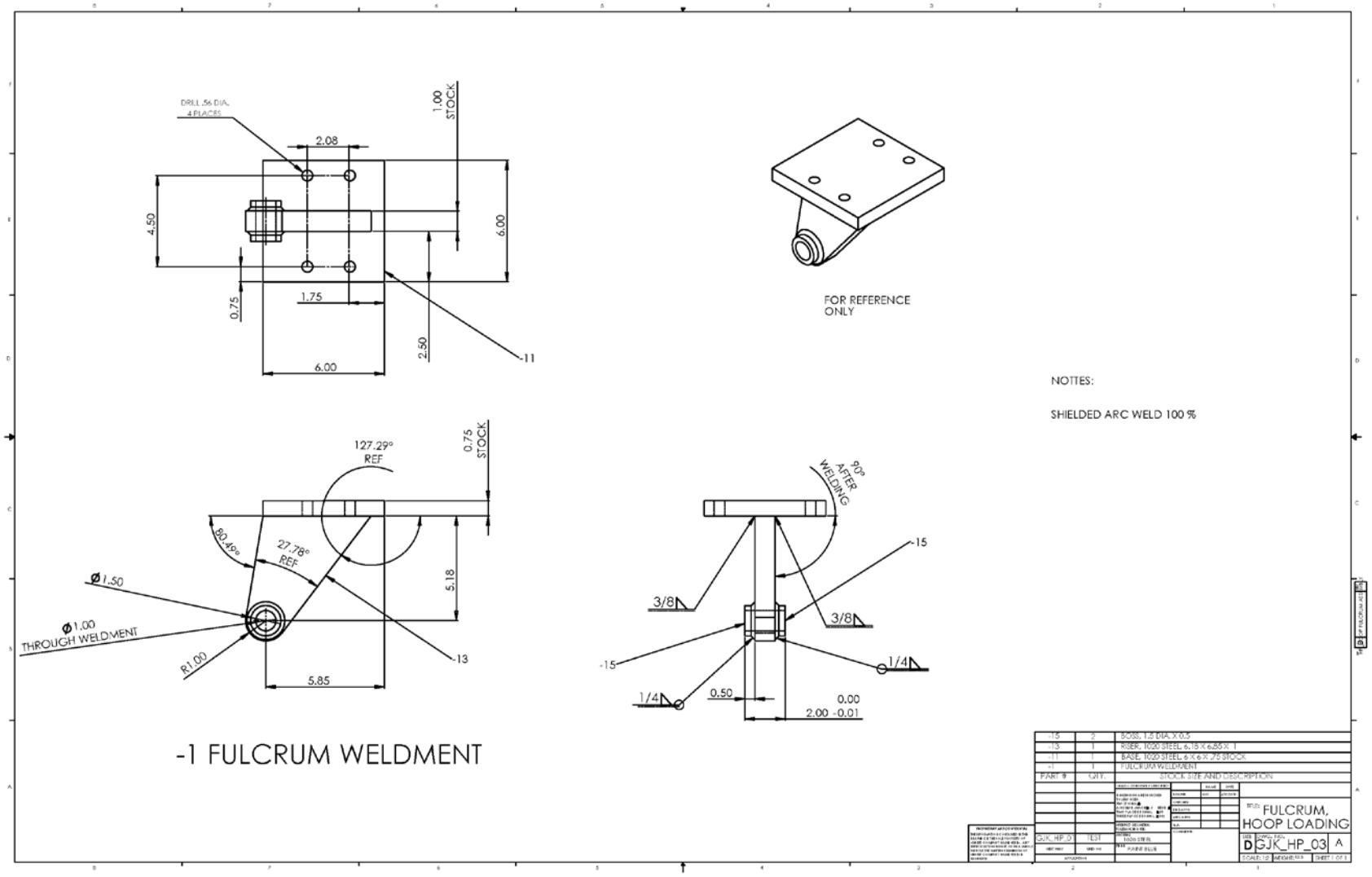

Figure A-17. Hoop Loading—Fulcrum, Hoop Loading (a quantity of 14 was used)

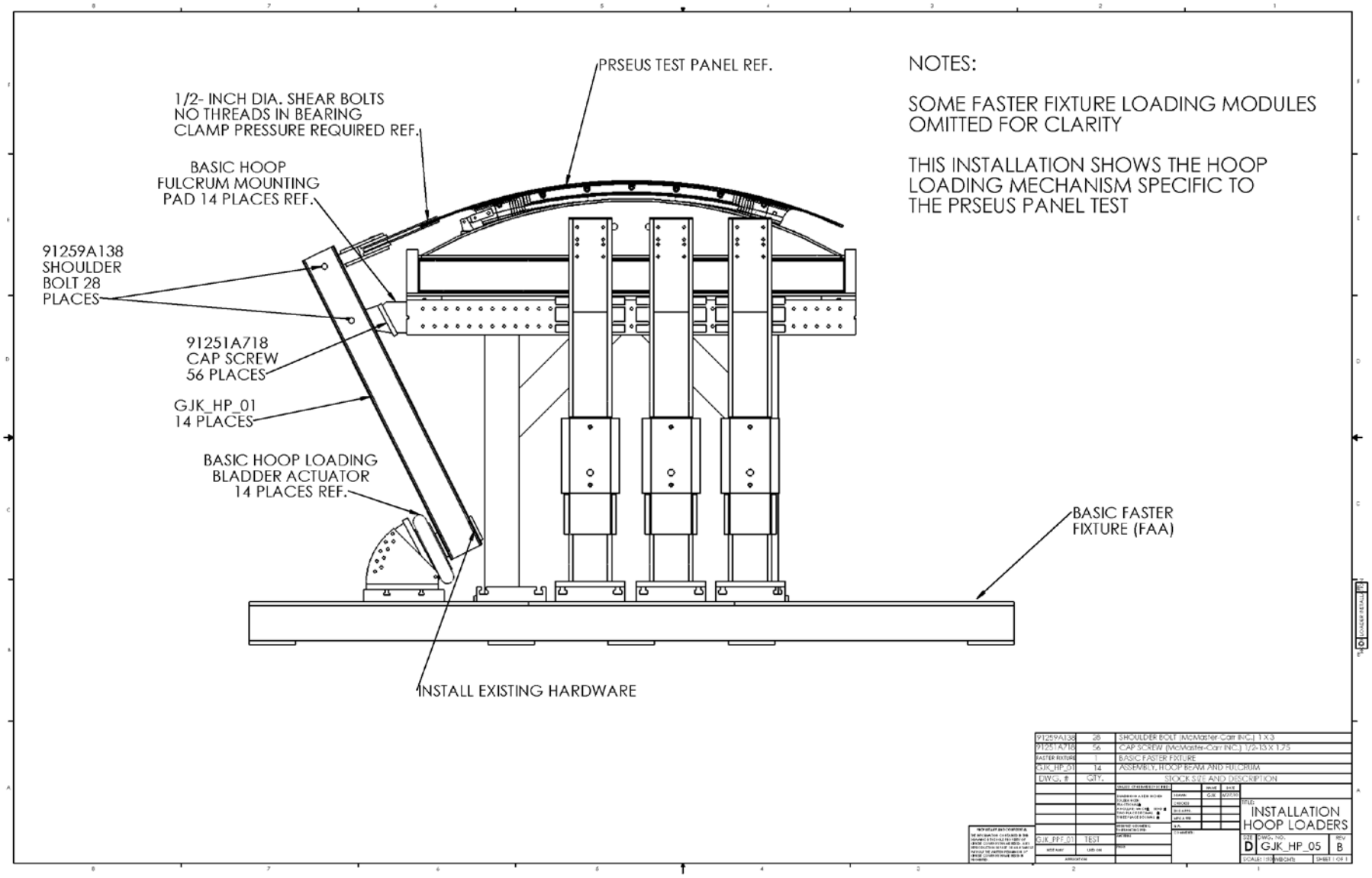

Figure A-18. Hoop Loader—Installation, Hoop Loaders

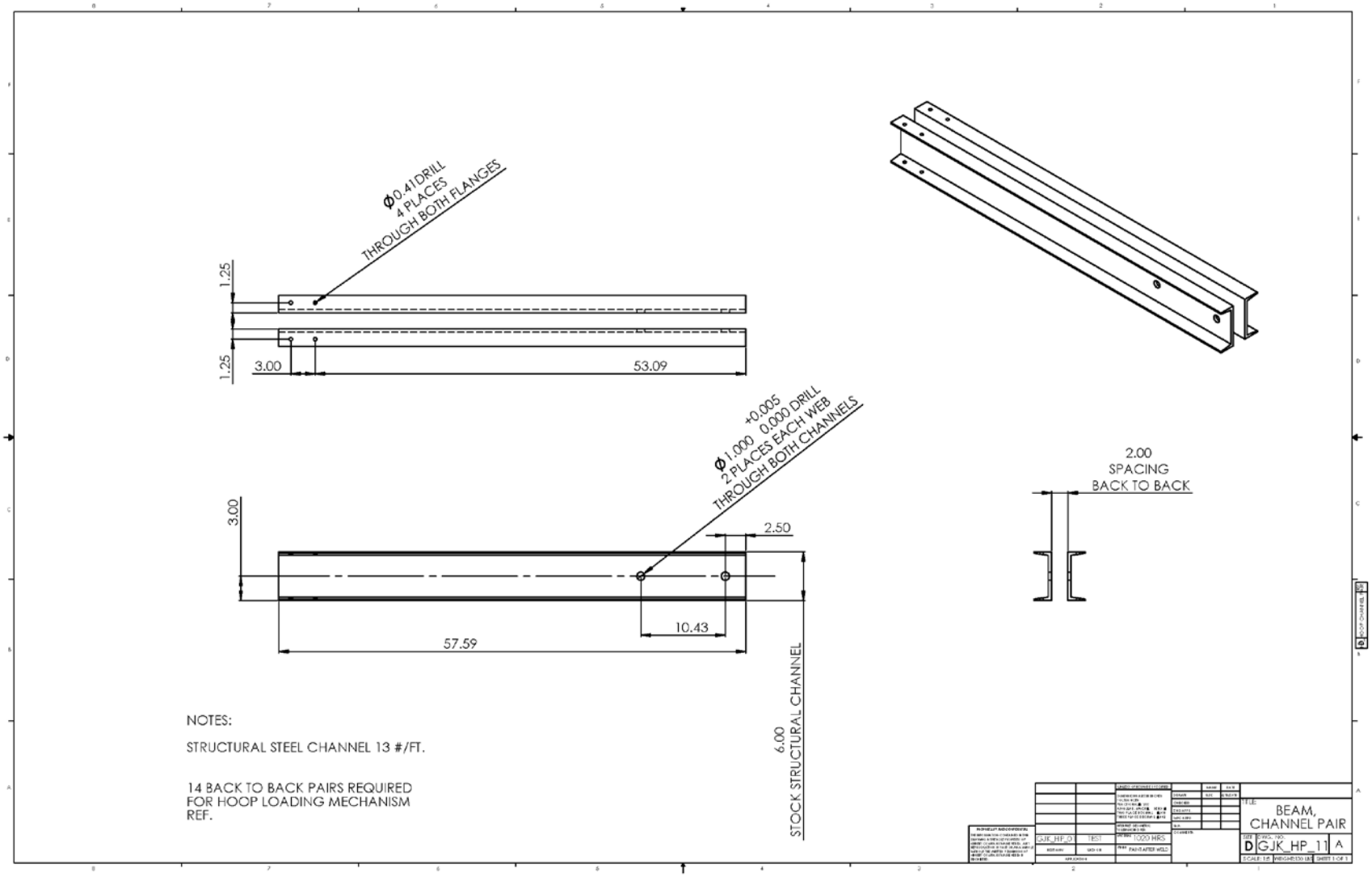

Figure A-19. Hoop Loader—Beam, Channel Pair (a quantity of 14 was used)

The part shown in figure A-20 was modified for the as-built condition in that the assembly was performed off-fixture and four eye bolts were attached to corners of the assembly for hoisting purposes.

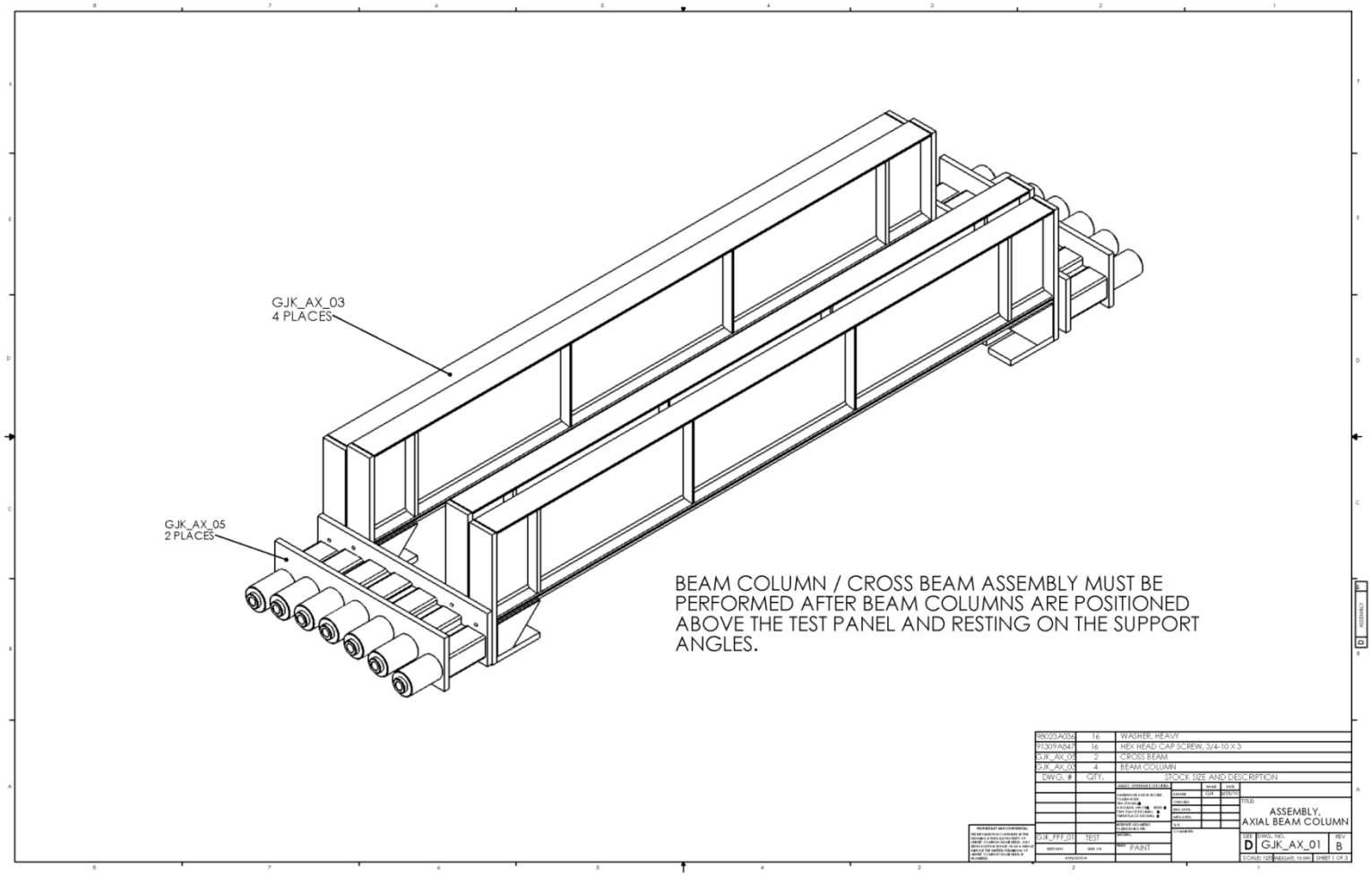

Figure A-20. (a) Axial Loader—Assembly, Axial Beam Column (a quantity of 1 was used)

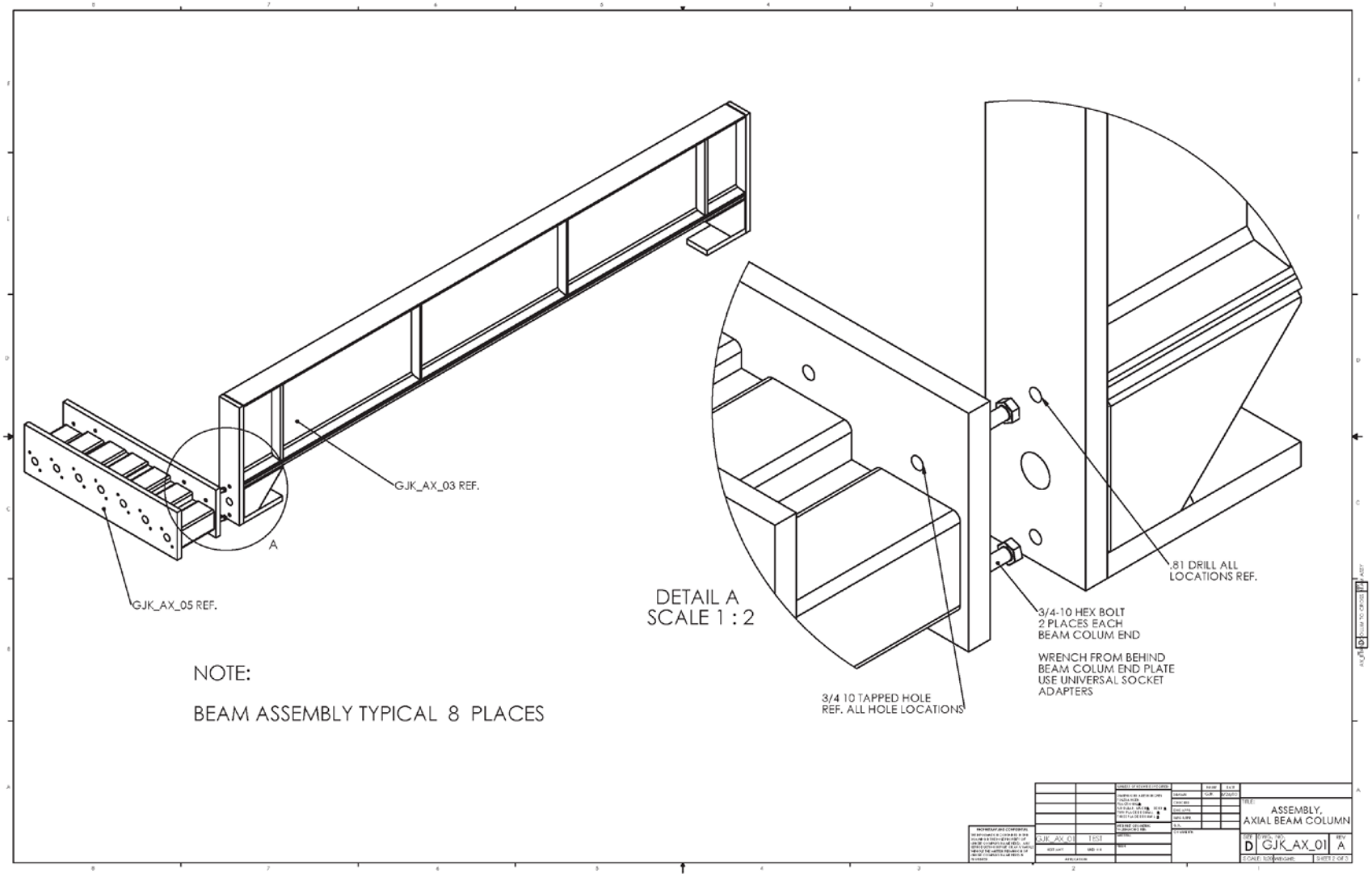

Figure A-20. (b) Beam Column and Cross Beam Assembly Detail

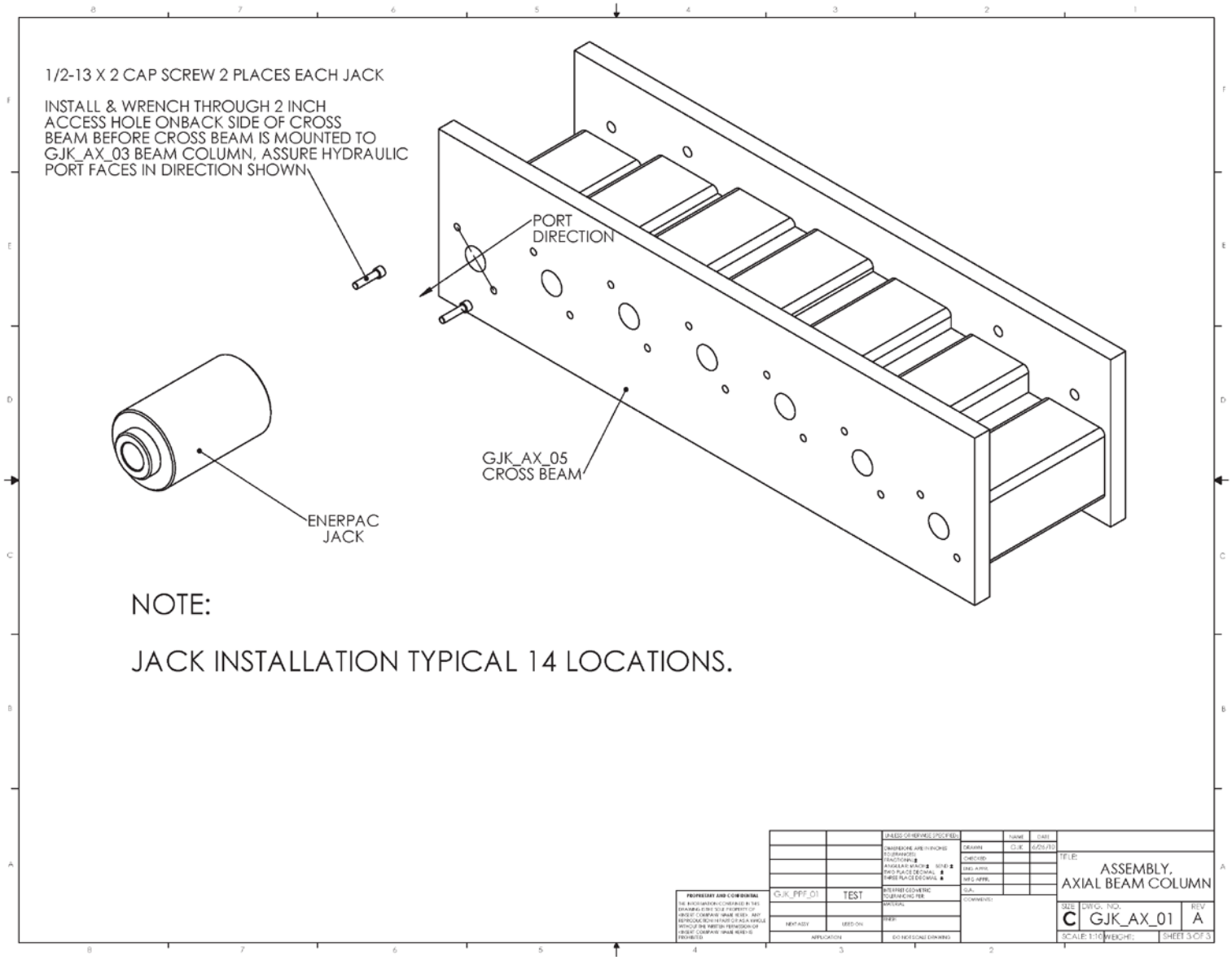

Figure A-20. (c) Jack Installation

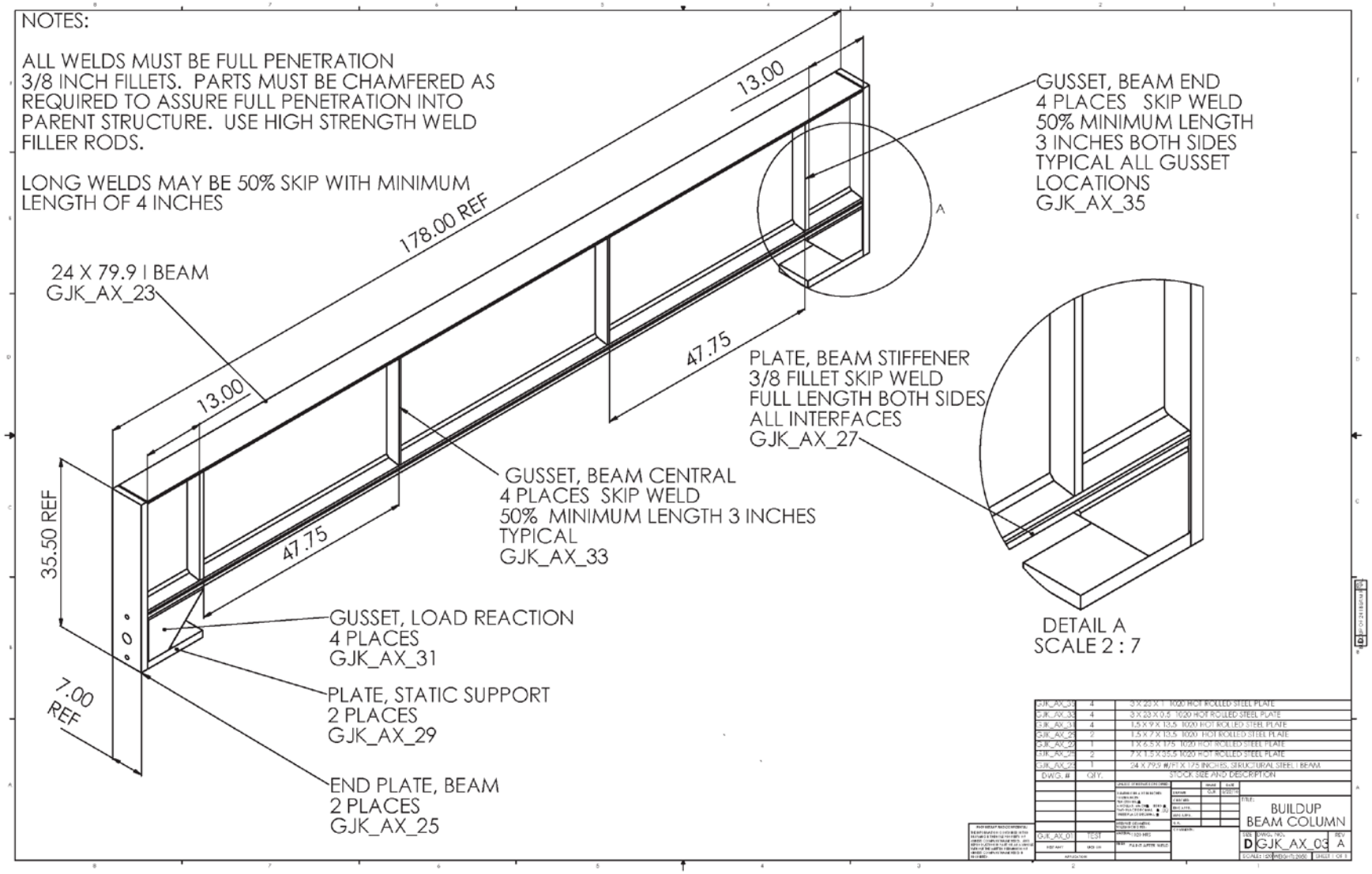

Figure A-21. Axial Loader—Subassembly, Buildup Beam Column (a quantity of 4 was used)

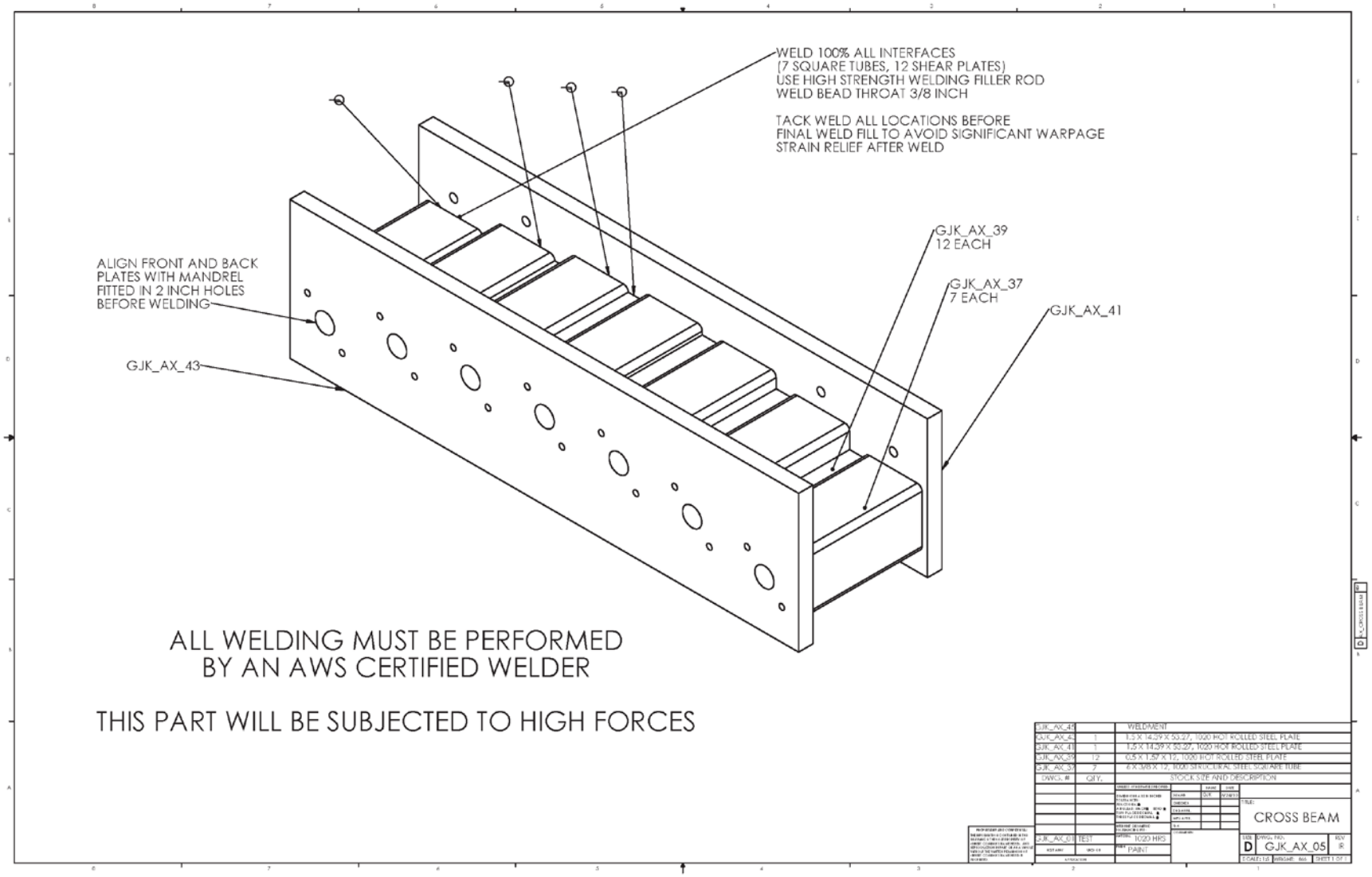

Figure A-22. Axial Loader—Cross Beam (a quantity of 2 was used)

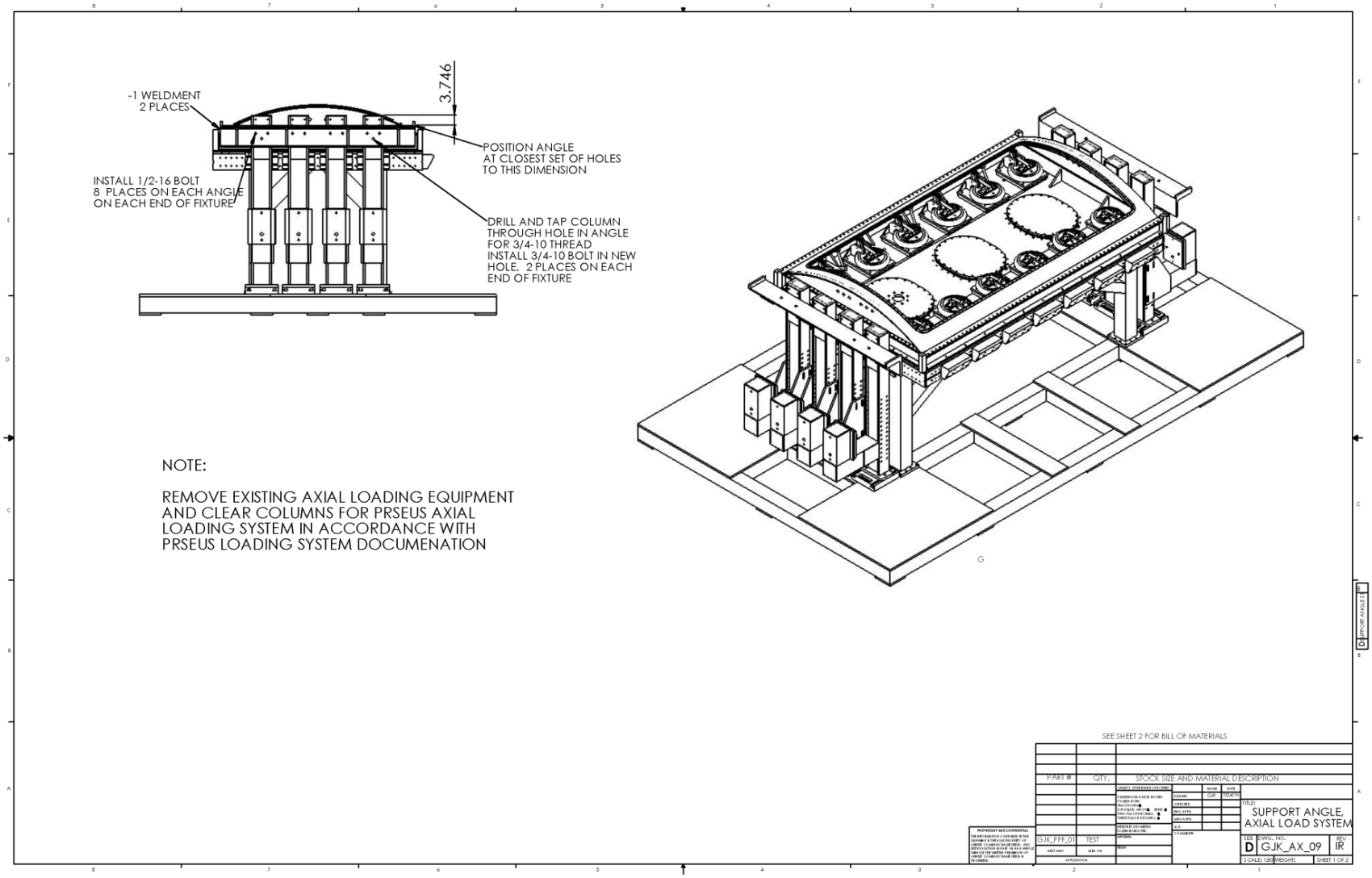

Figure A-23. (a) Axial Loader—Subassembly, Support Angle, Axial Load System (a quantity of 2 was used)

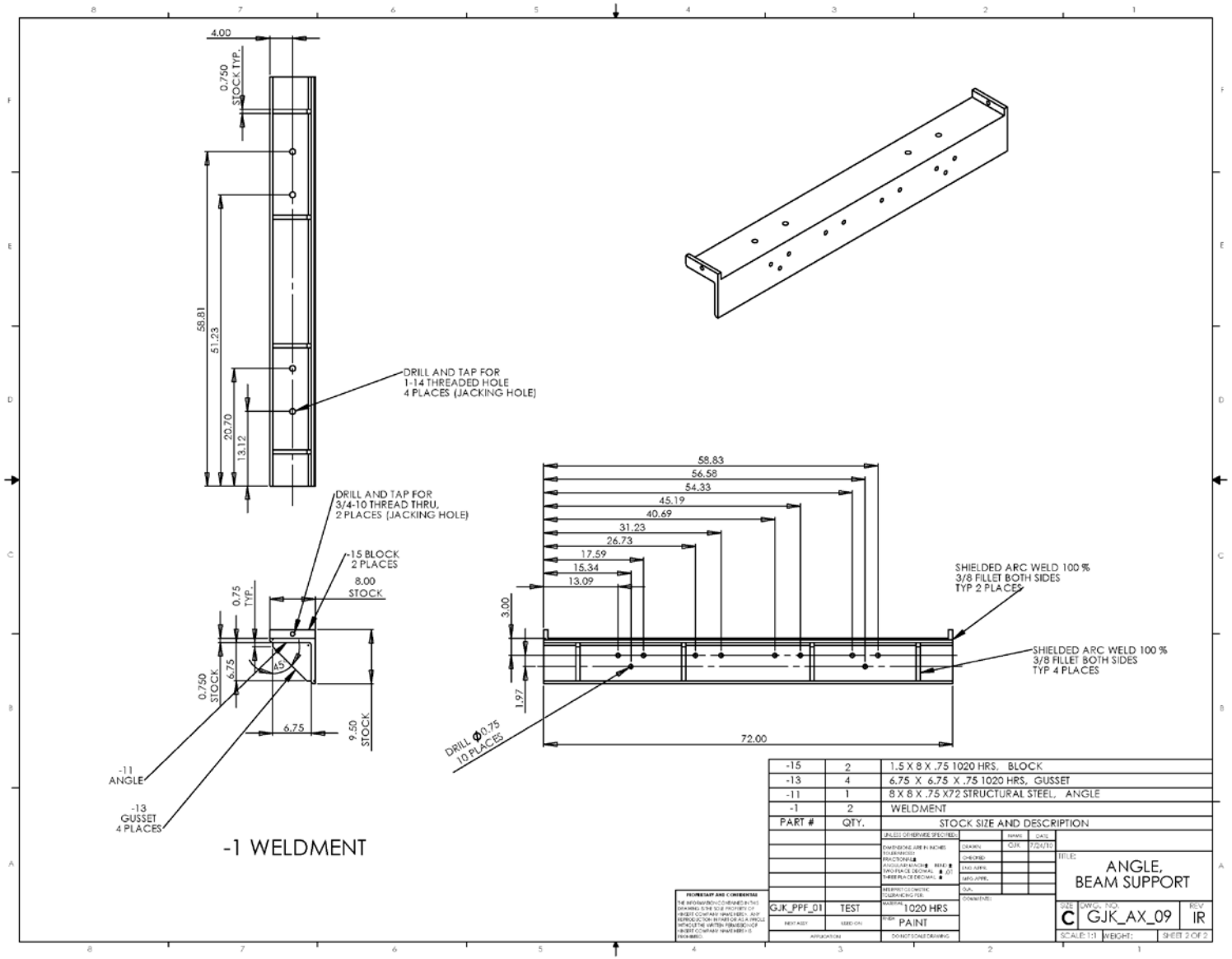

Figure A-23. (b) Angle, Beam Support, Weldment and Hole Placement

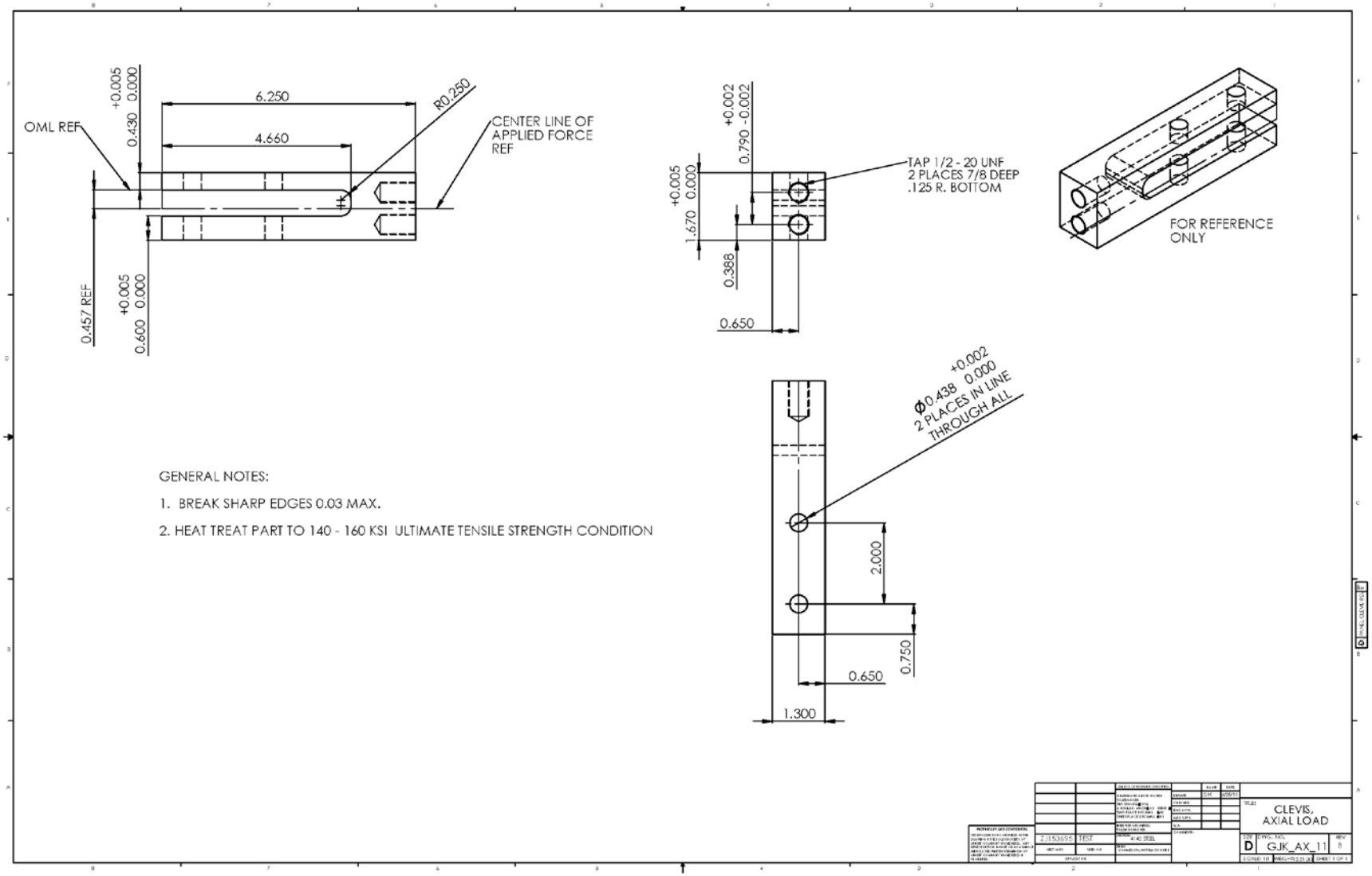

Figure A-24. Axial Loader—Clevis, Axial Load (a quantity of 56 was used)

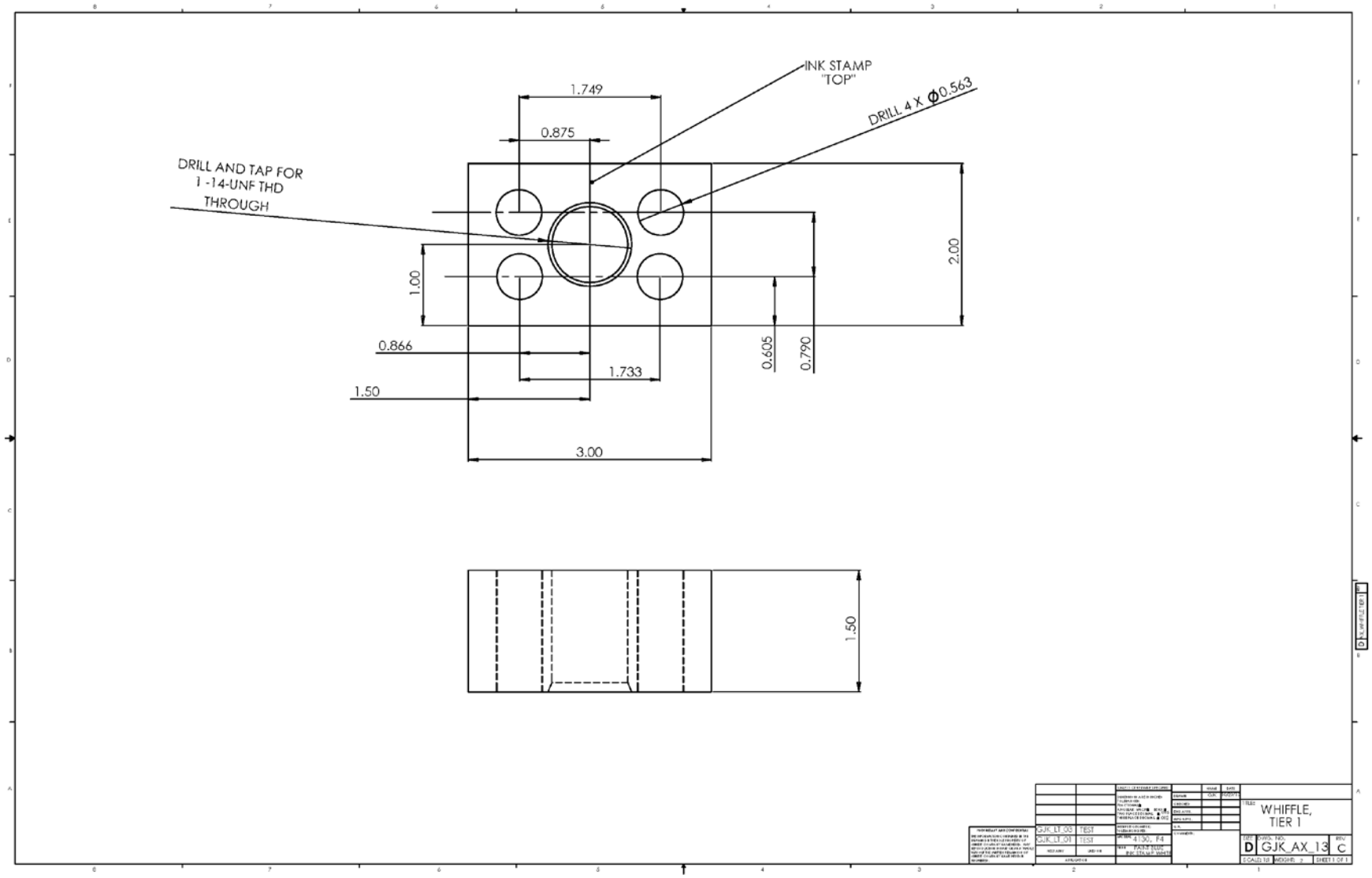

Figure A-25. Axial Loader—Whiffle, Tier 1 (a quantity of 28 was used)

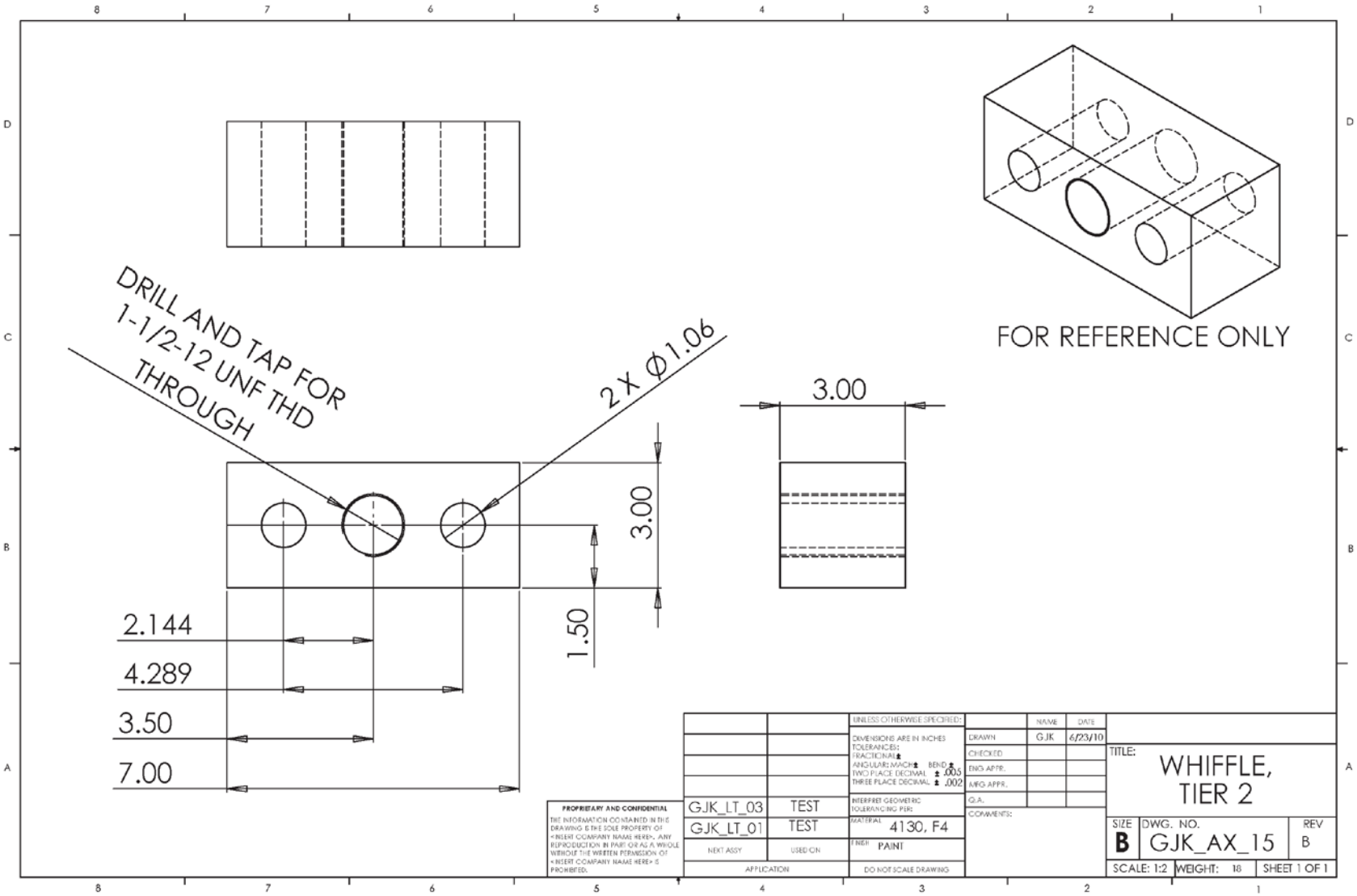

Figure A-26. Axial Loader—Whiffle, Tier 2 (a quantity of 14 was used)

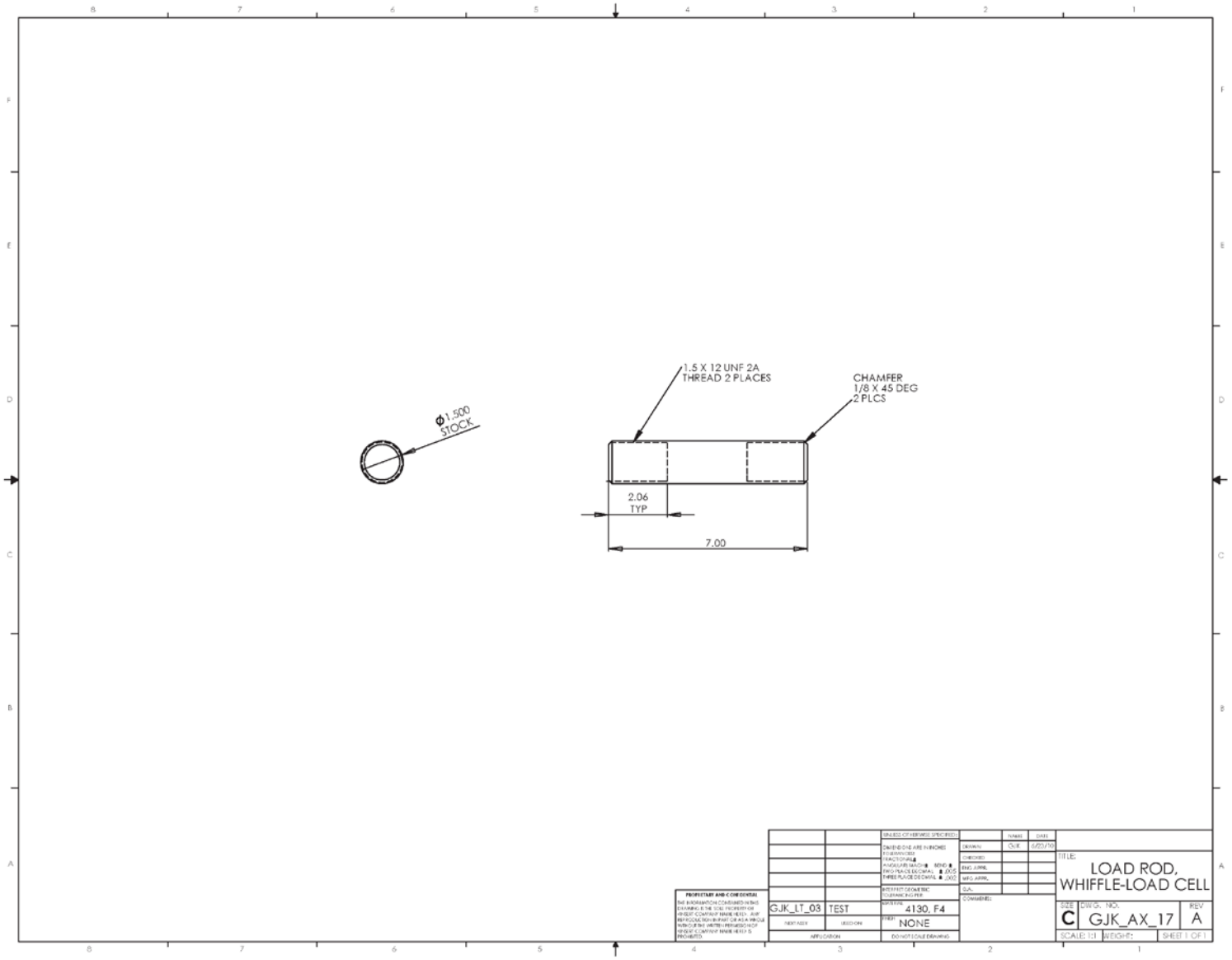

Figure A-27. Axial Loader—Load Rod, Whiffle Load Cell (a quantity of 7 was used)

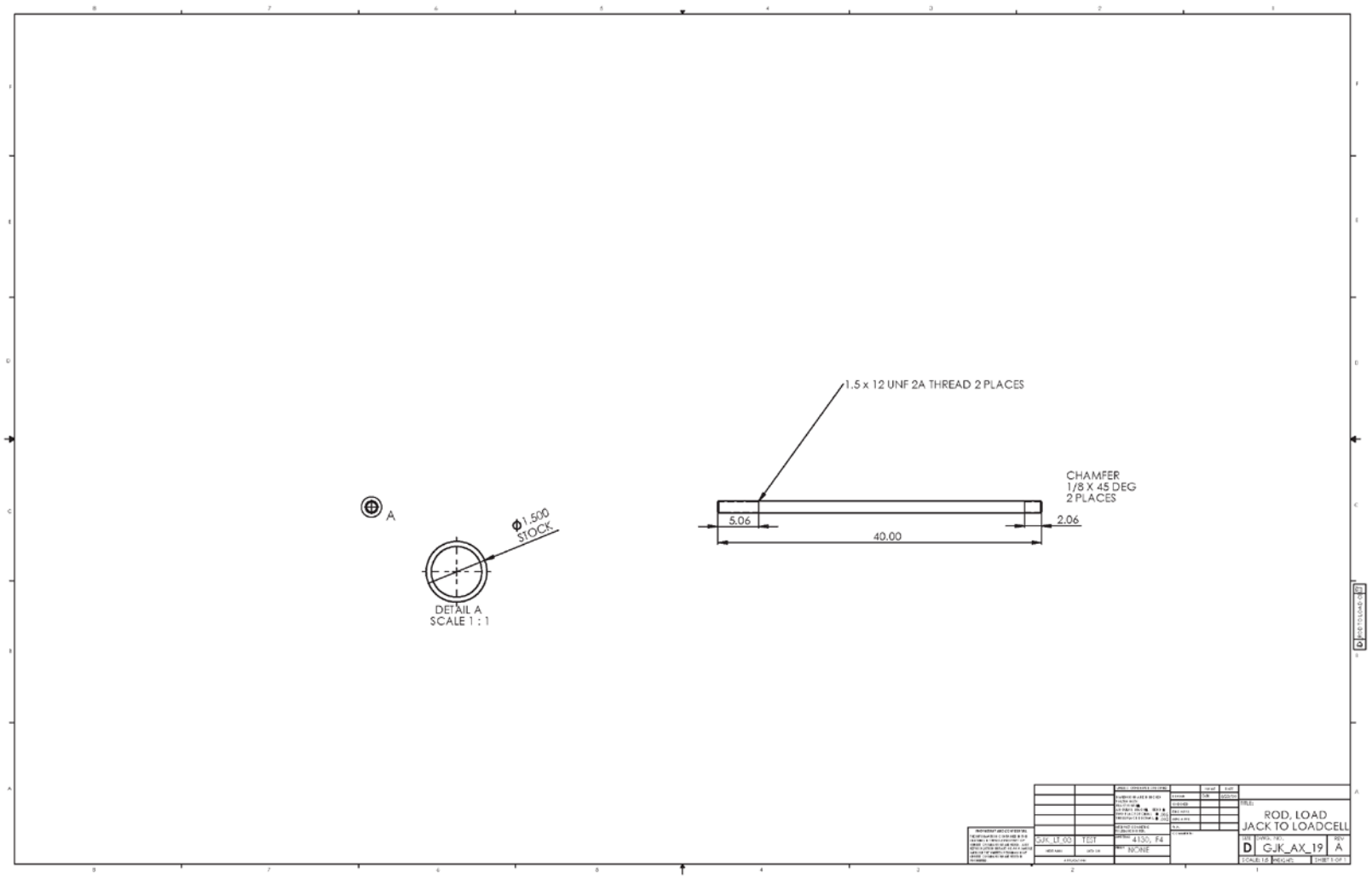

Figure A-28. Axial Loader—Rod, Load Jack to Load Cell (a quantity of 7 was used)

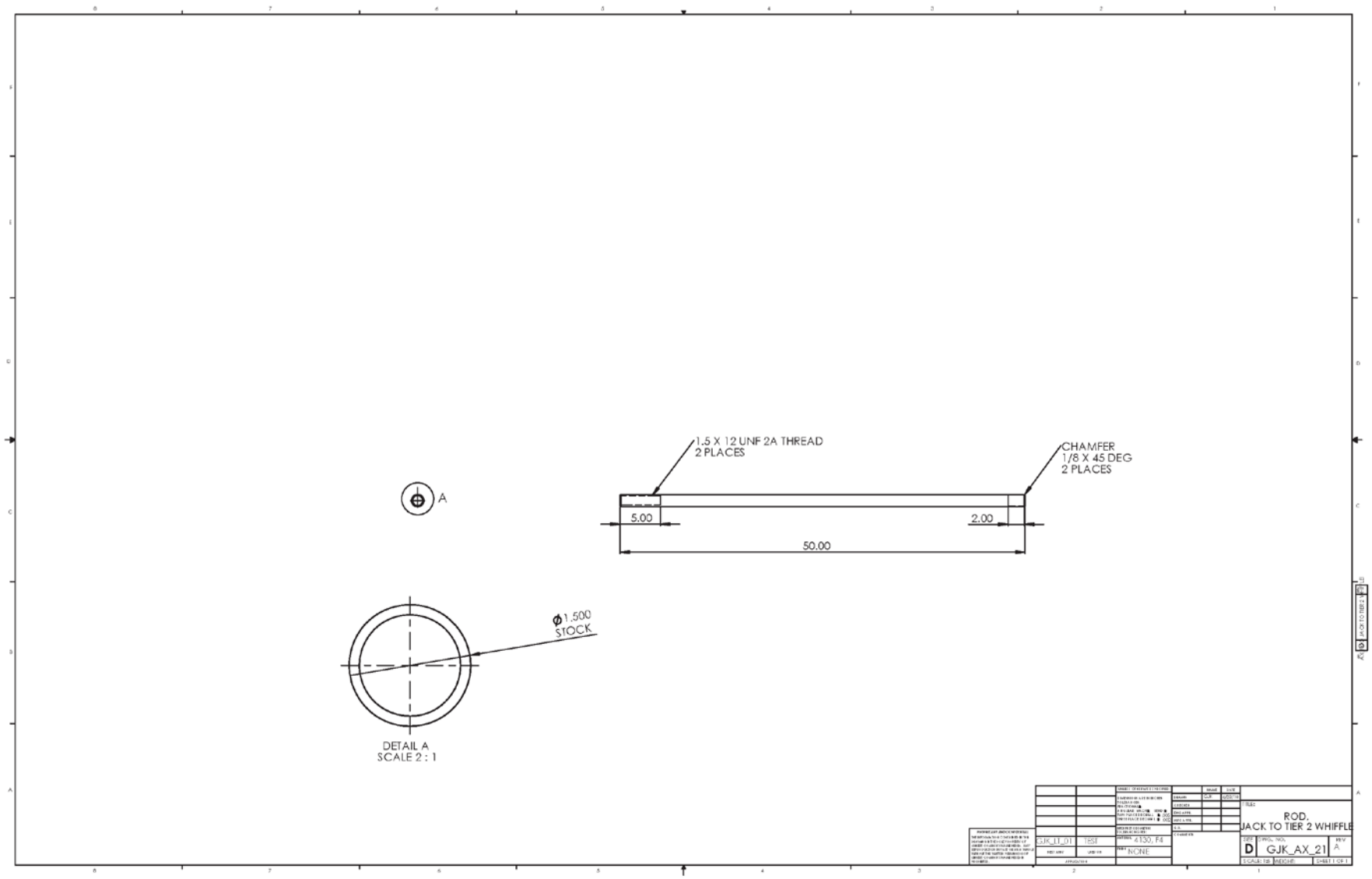

Figure A-29. Axial Loader—Rod, Jack to Tier 2 Whiffle (a quantity of 7 was used)

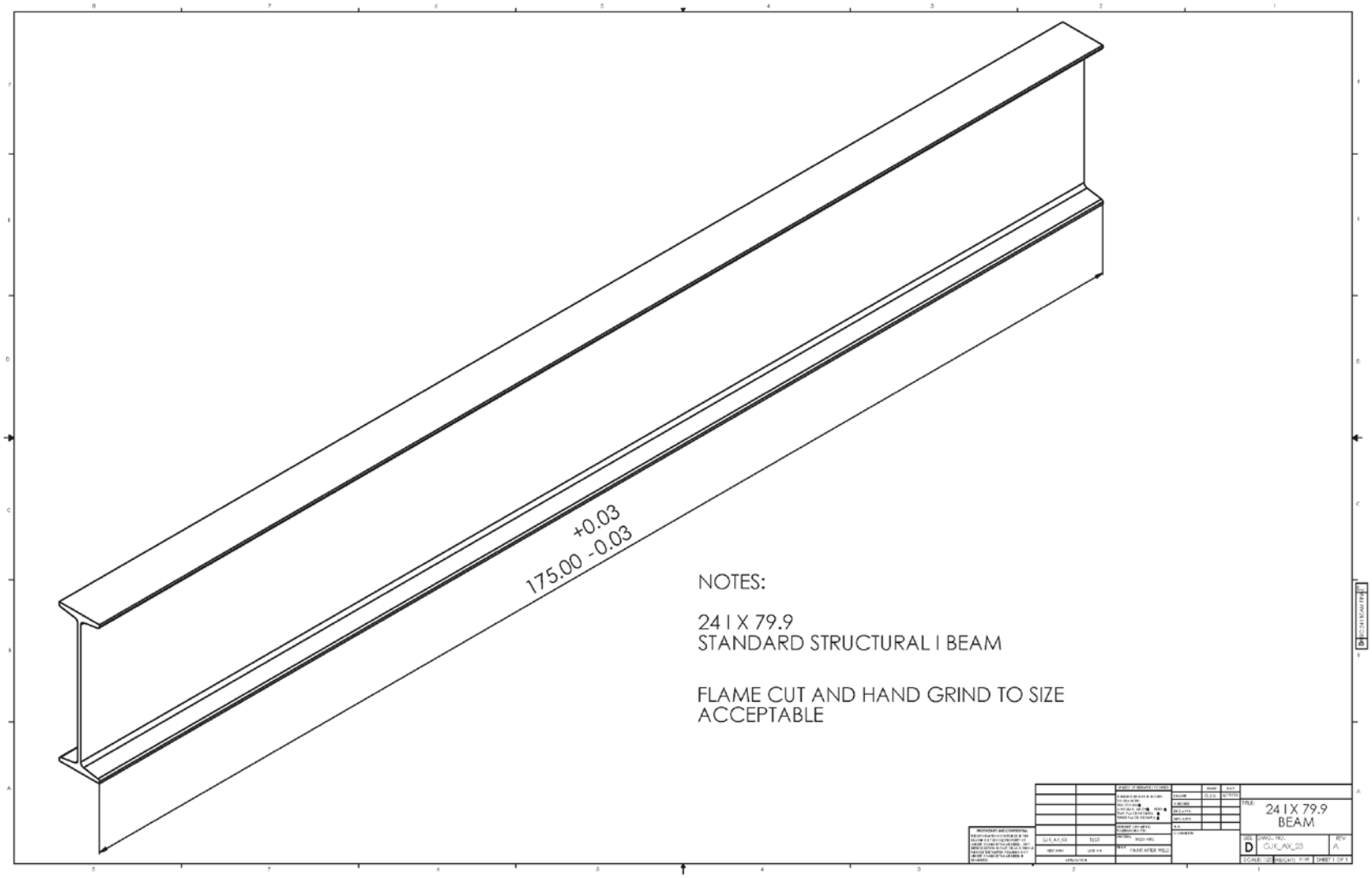

Figure A-30. Axial Loader—24 I x 79.9 Beam (a quantity of 4 was used)

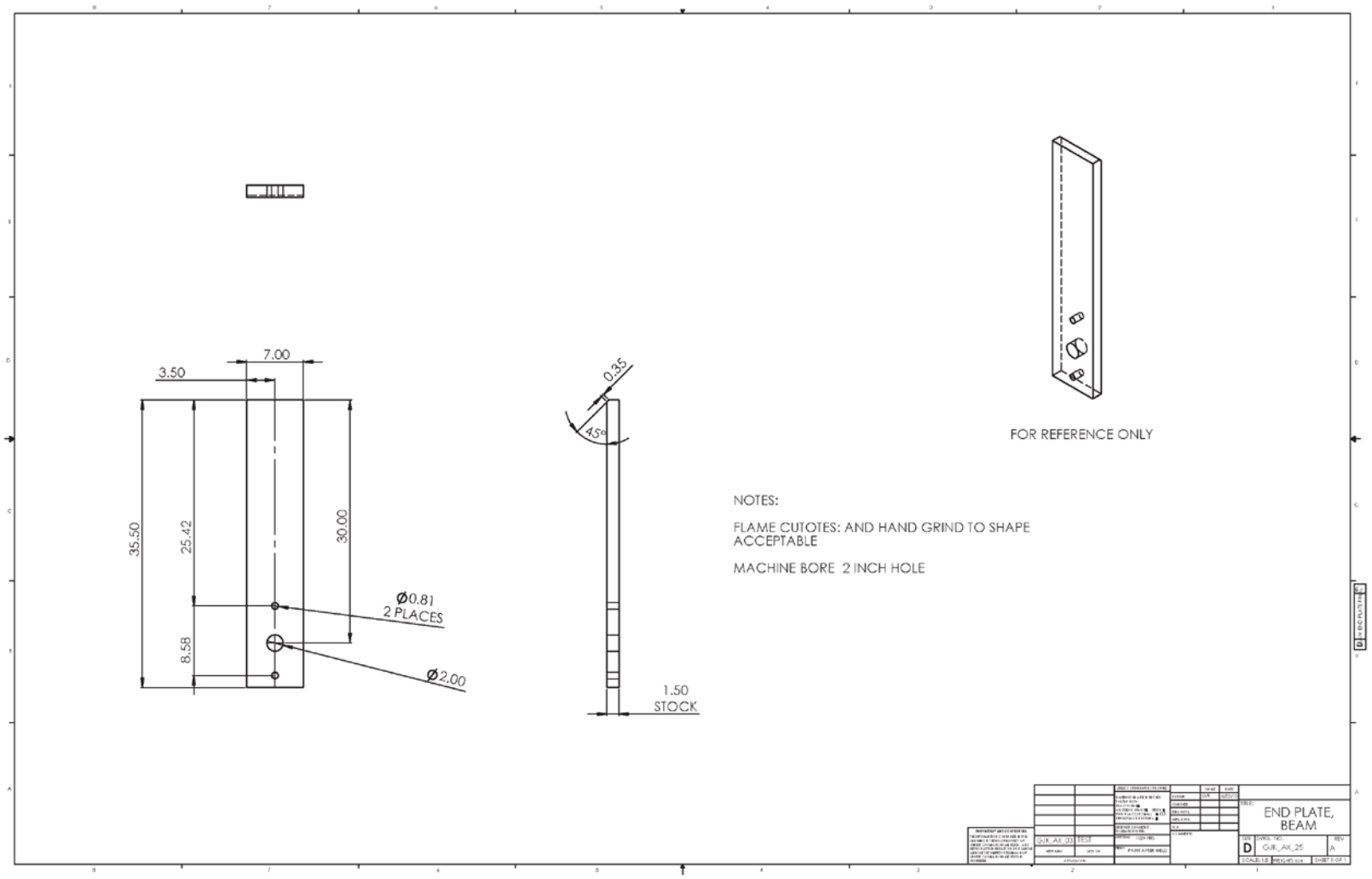

Figure A-31. Axial Loader—End Plate, Beam (a quantity of 8 was used)

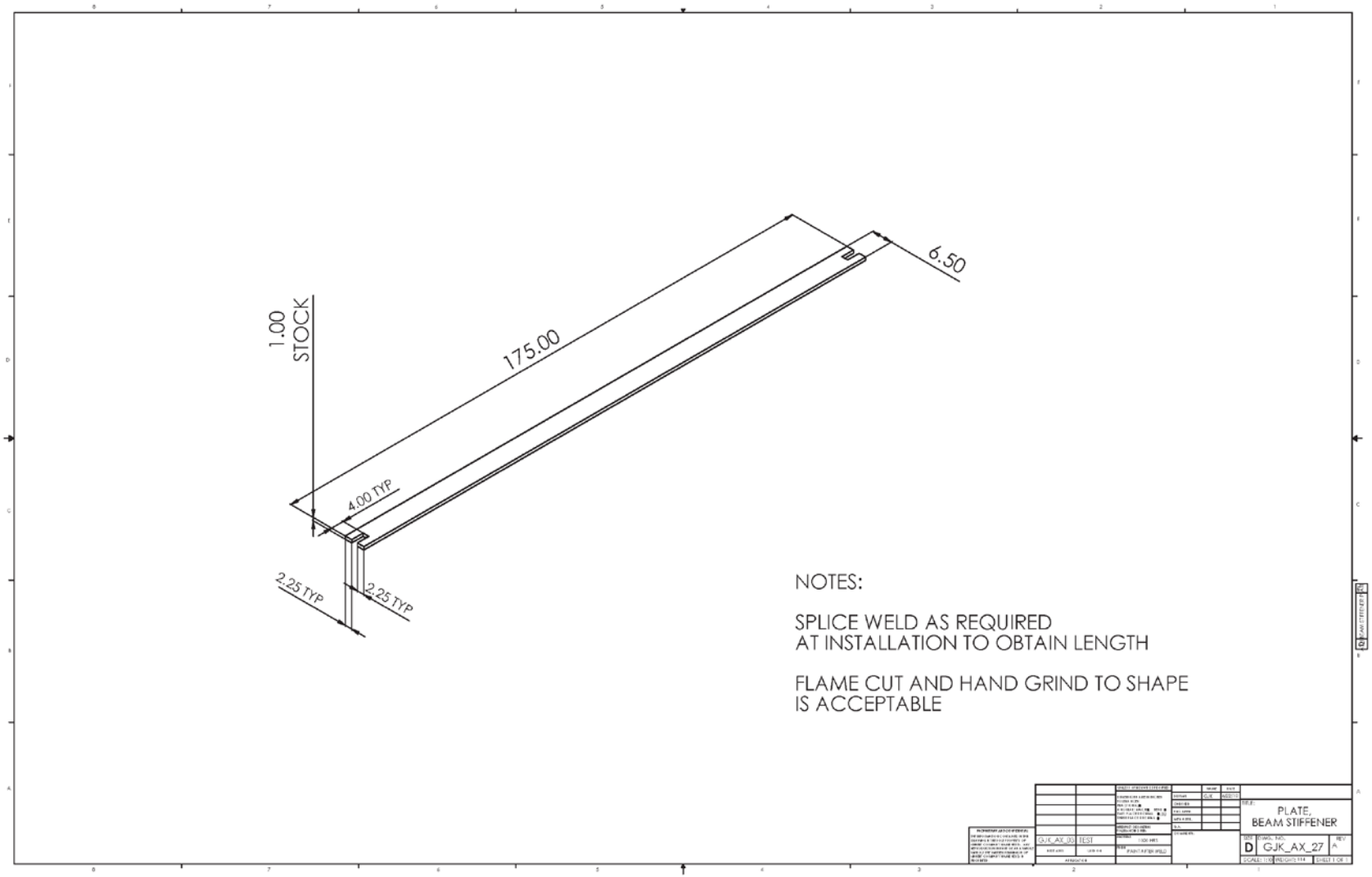

Figure A-32. Axial Loader—Plate, Beam Stiffener (a quantity of 4 was used)

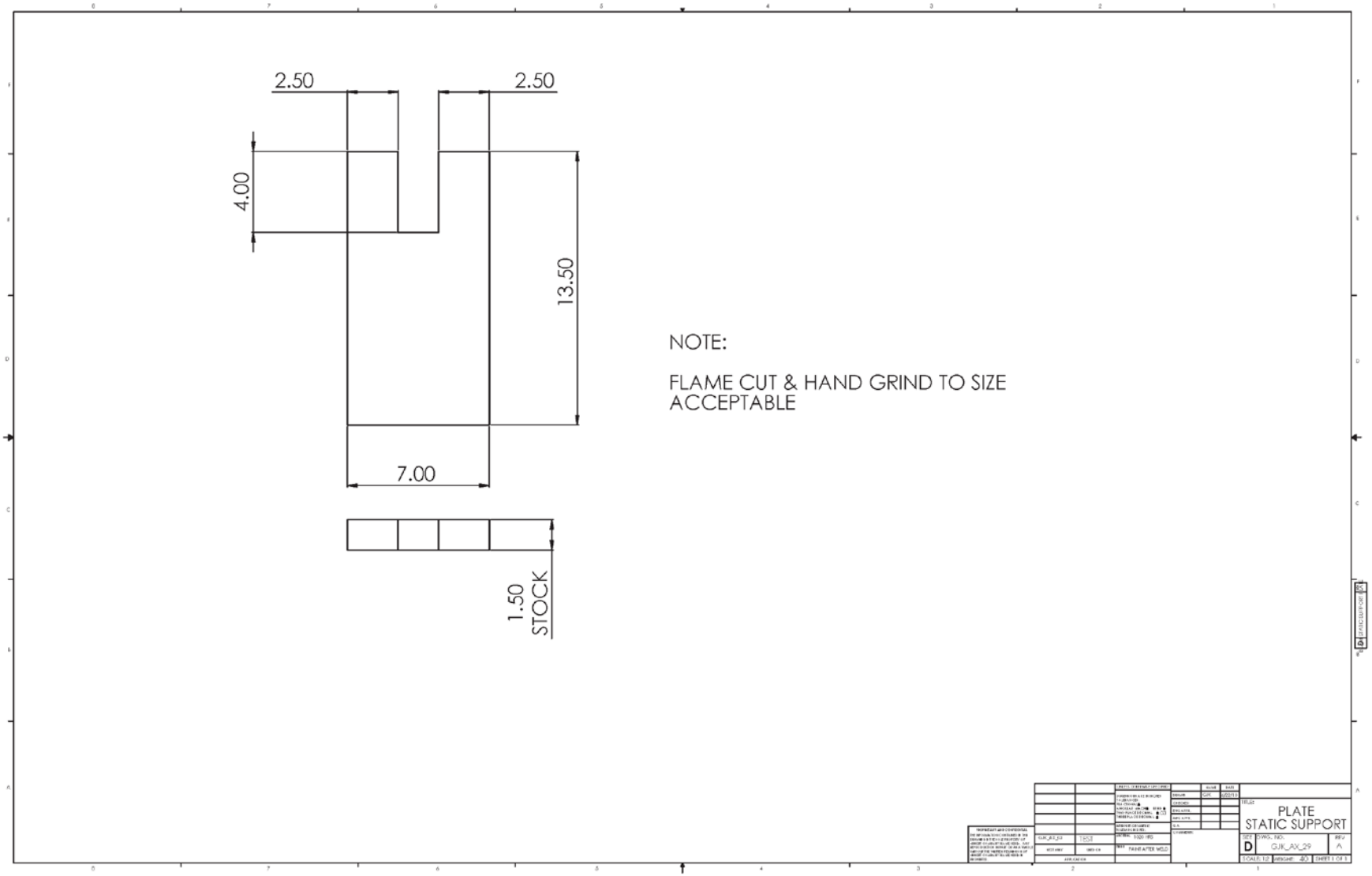

Figure A-33. Axial Loader—Plate, Static Report (a quantity of 8 was used)

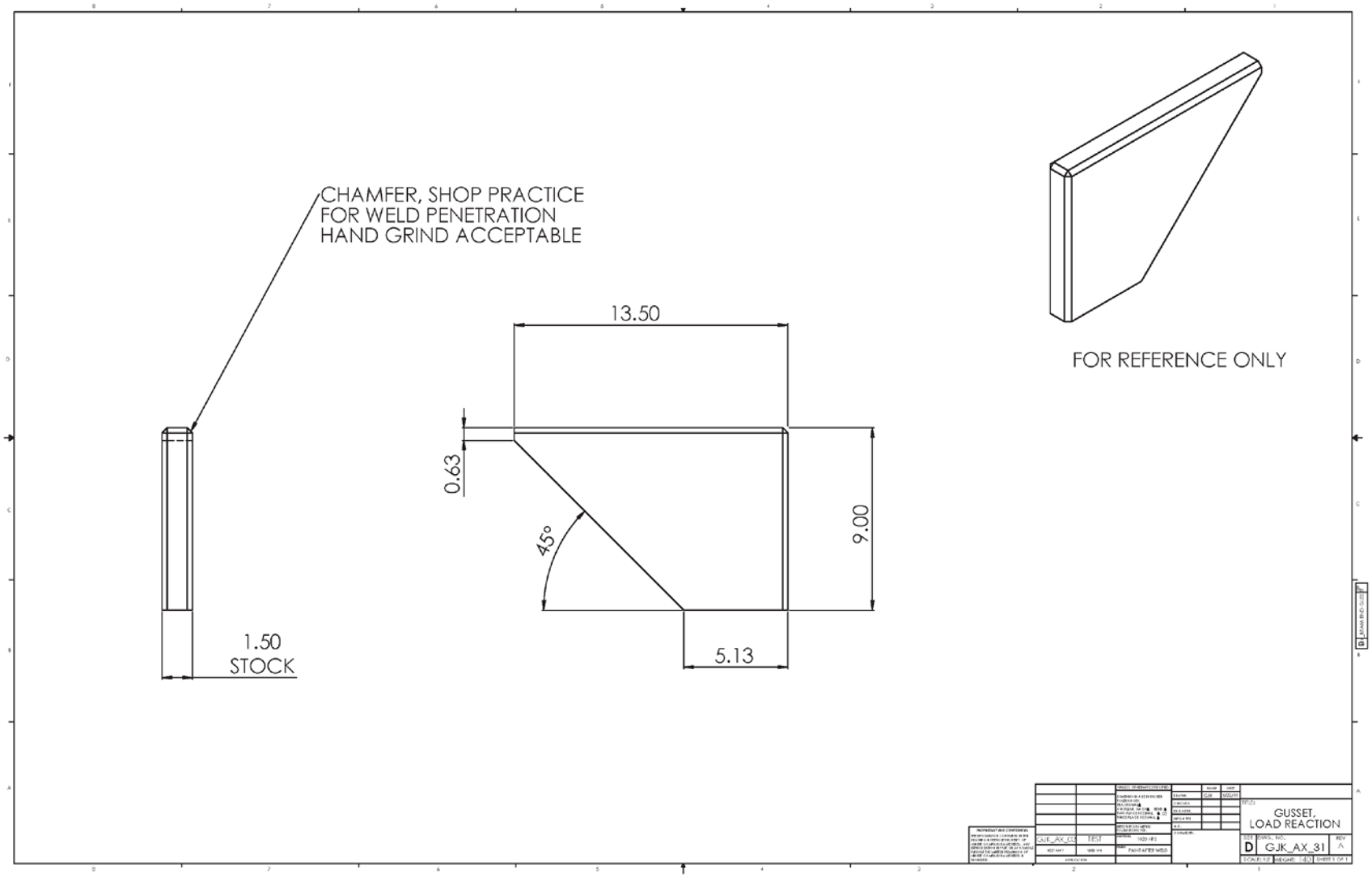

Figure A-34. Axial Loader—Gusset, Load Reaction (a quantity of 16 was used)

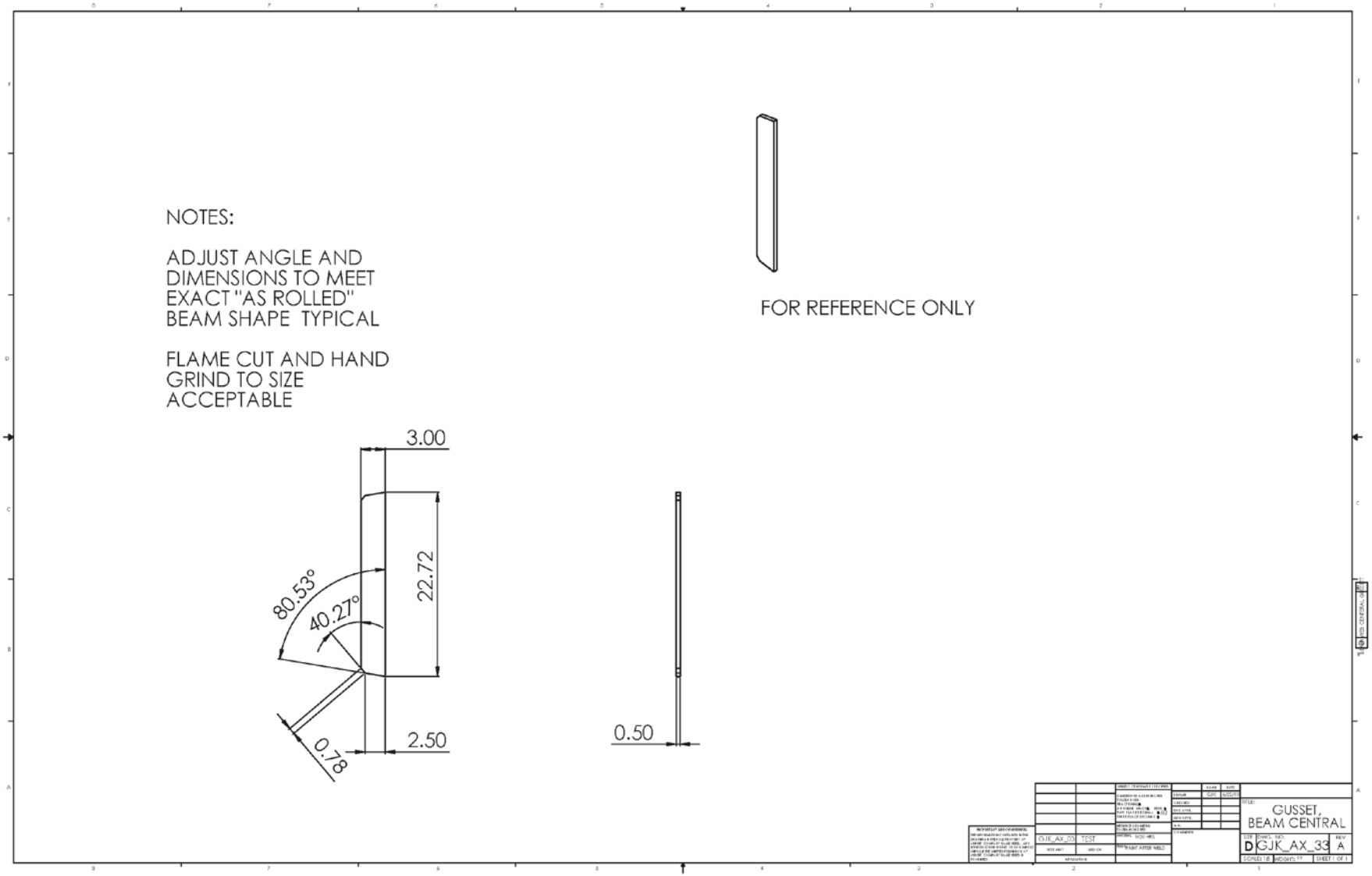

Figure A-35. Axial Loader—Gusset, Beam Central (a quantity of 16 was used)

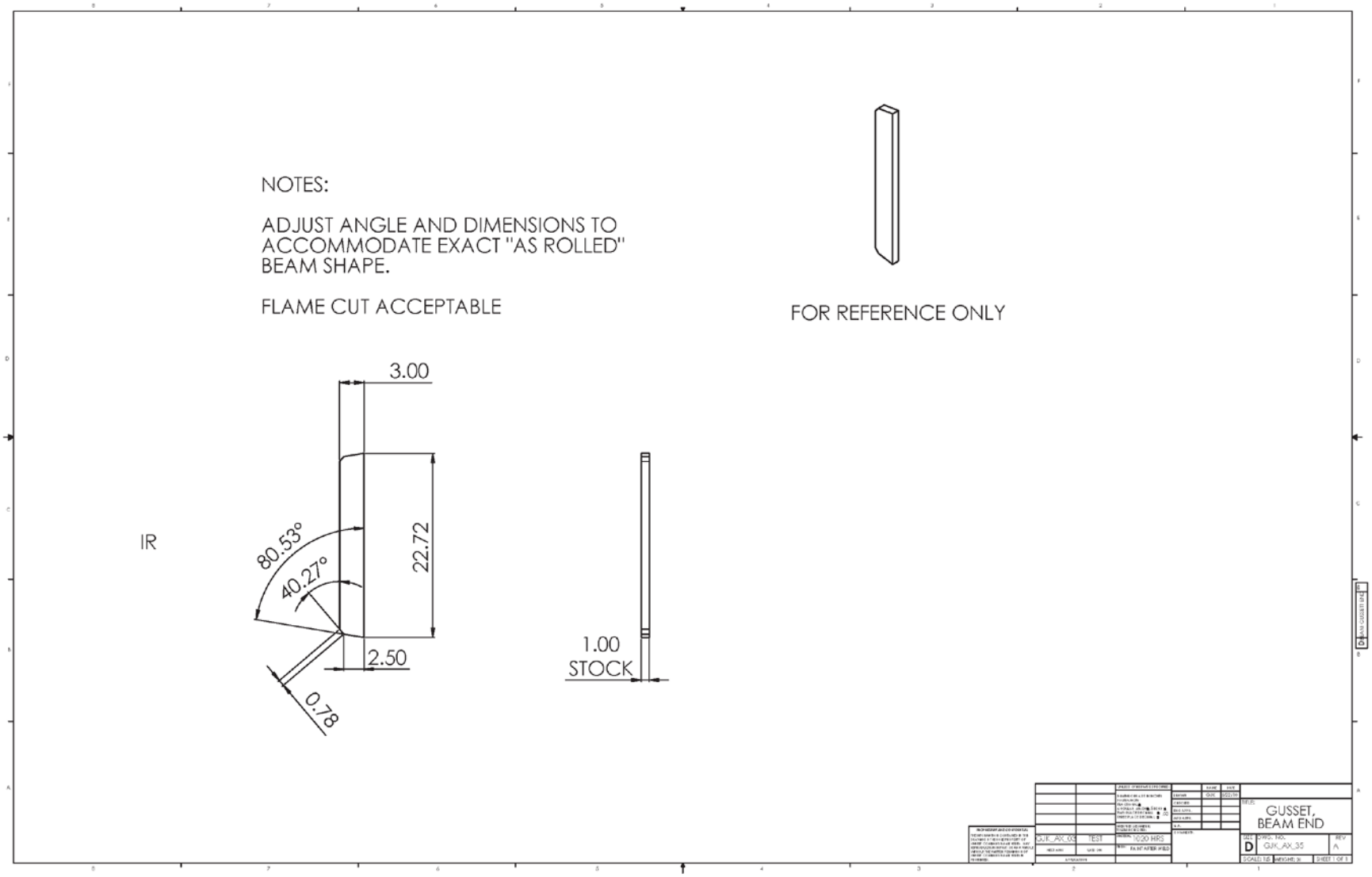

Figure A-36. Axial Loader—Gusset, Beam End (a quantity of 16 was used)

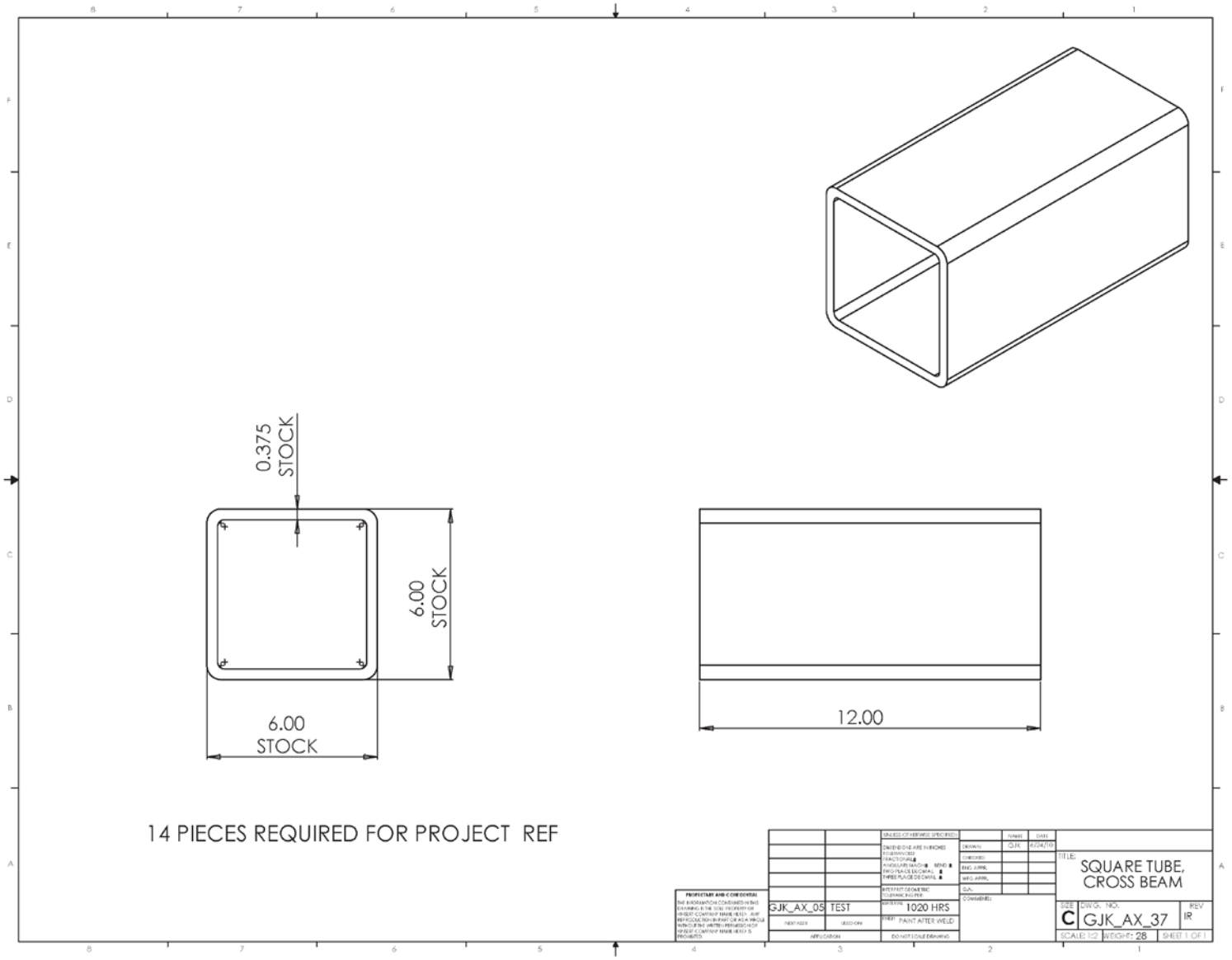

Figure A-37. Axial Loader—Square Tube, Cross Beam (a quantity of 14 was used)

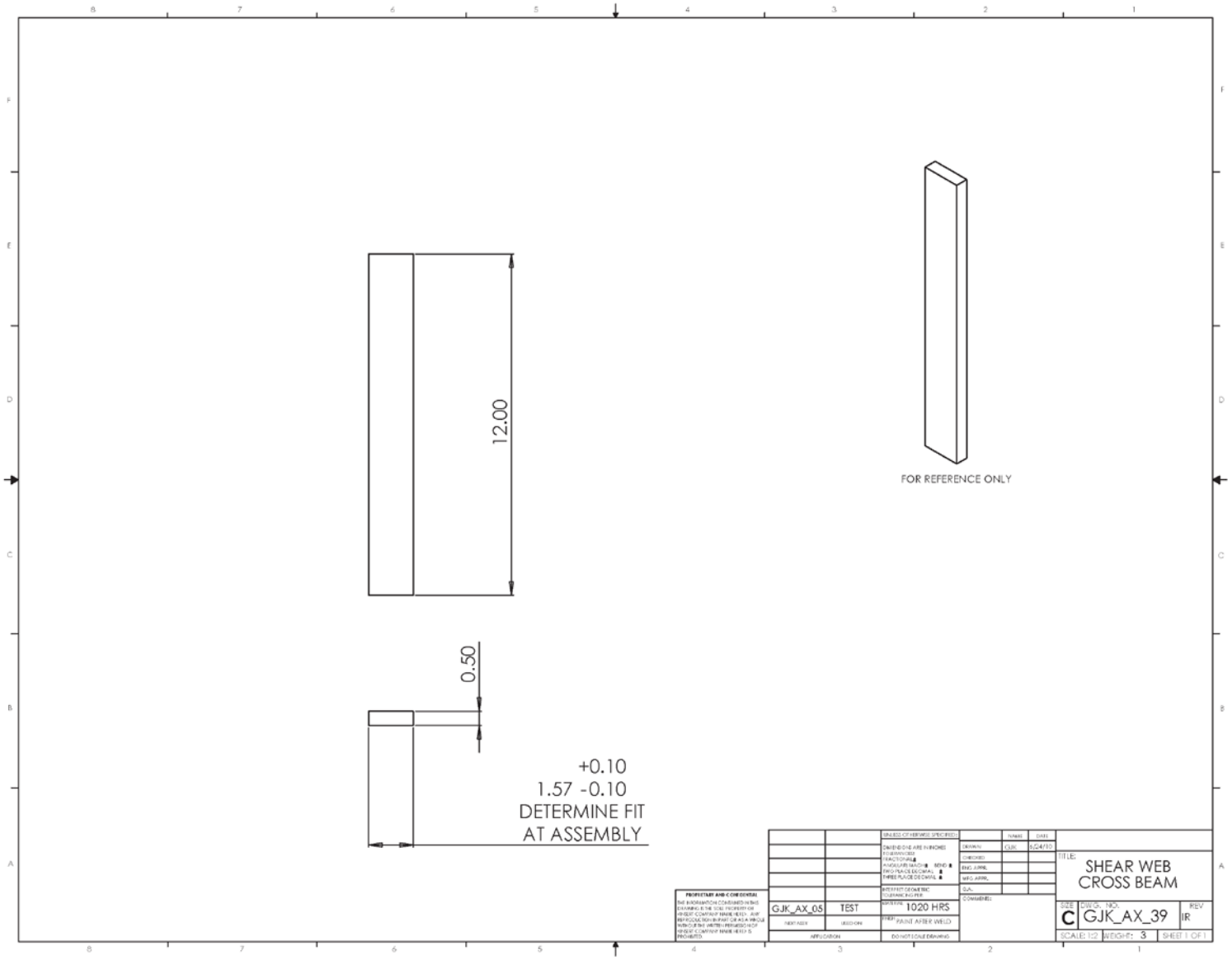

Figure A-38. Axial Loader—Shear Web, Cross Beam (a quantity of 24 was used)

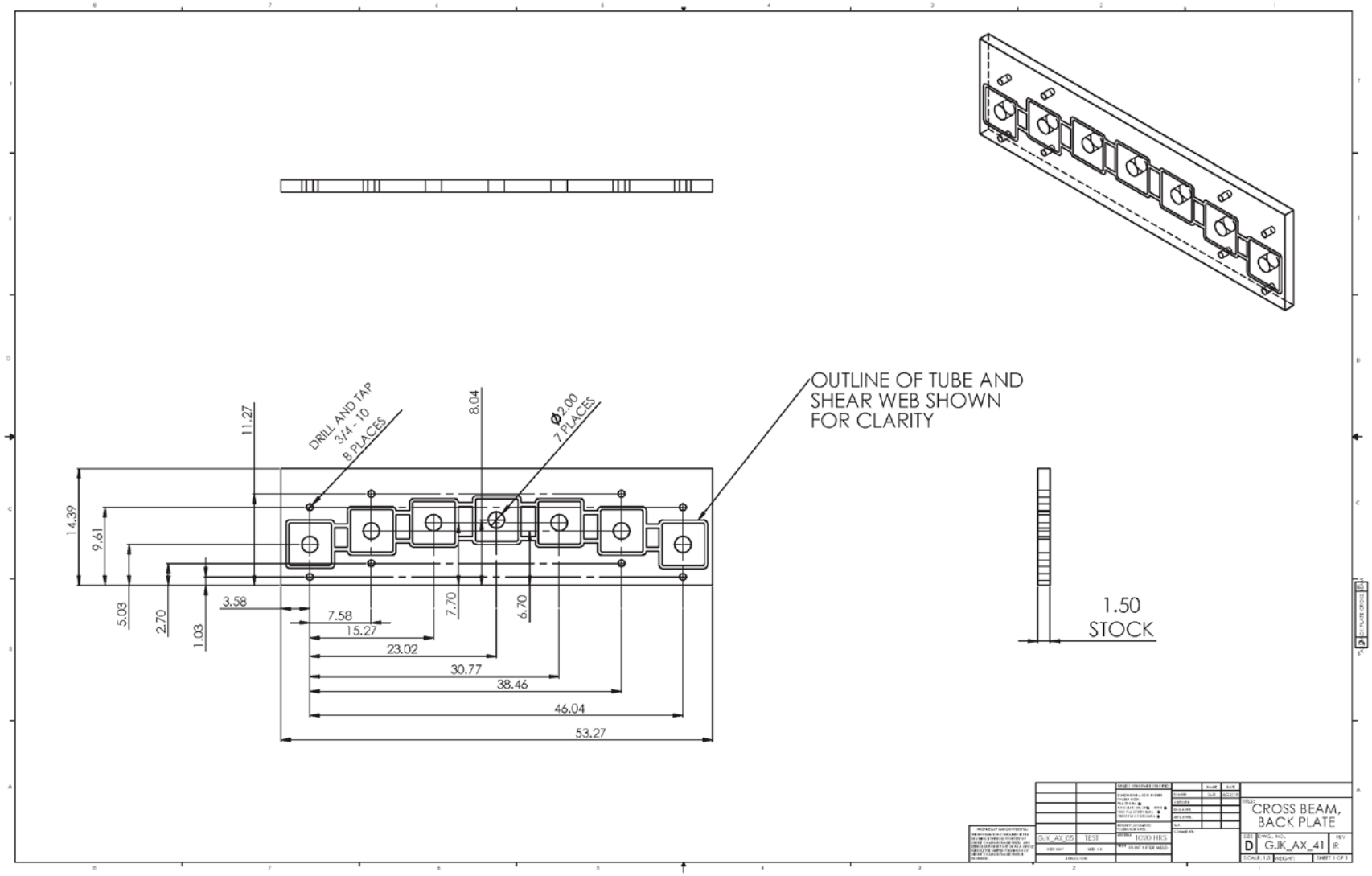

Figure A-39. Axial Loader—Cross Beam, Back Plate (a quantity of 2 was used)

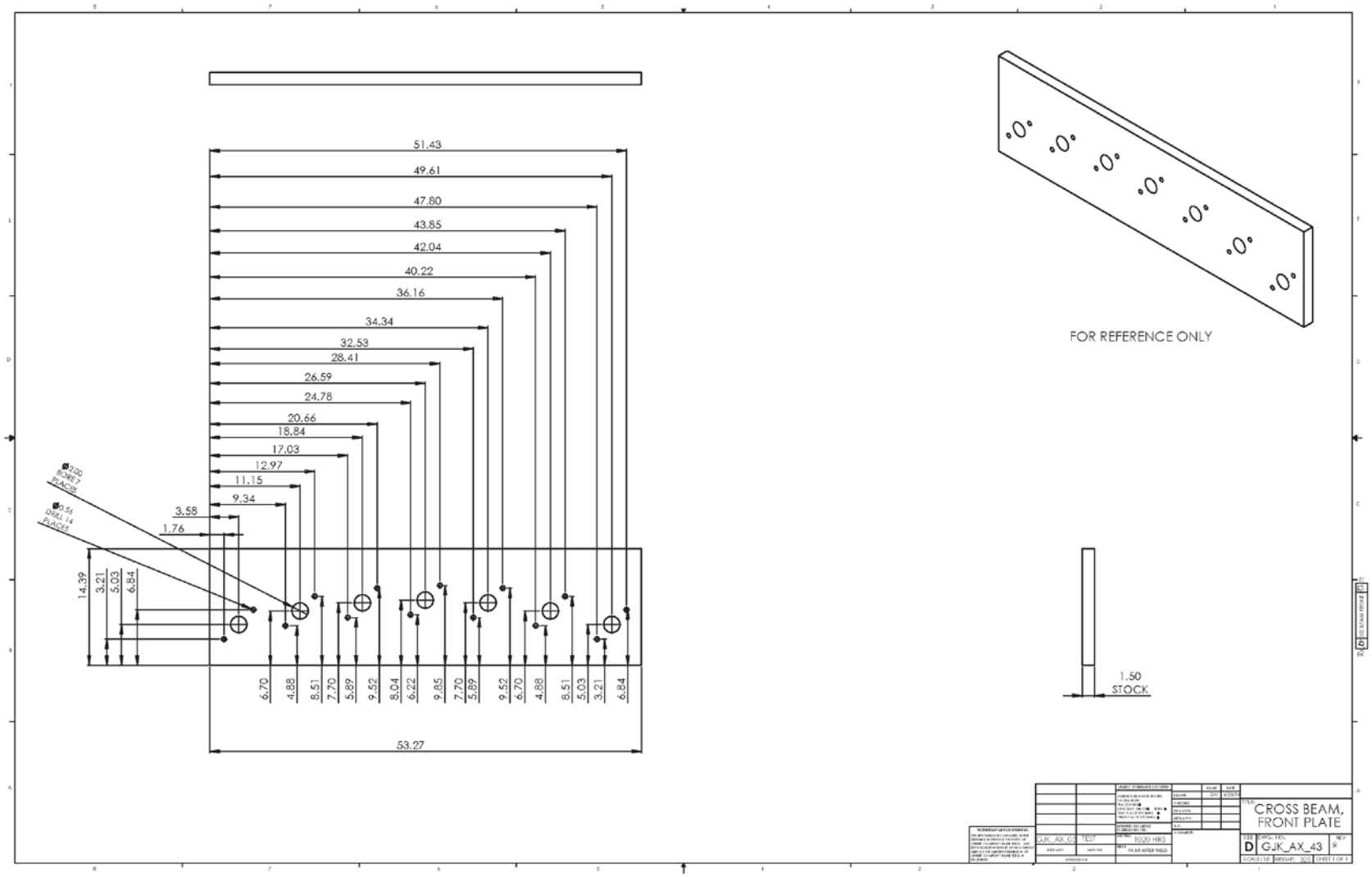

Figure A-40. Axial Loader—Cross Beam, Front Plate (a quantity of 2 was used)

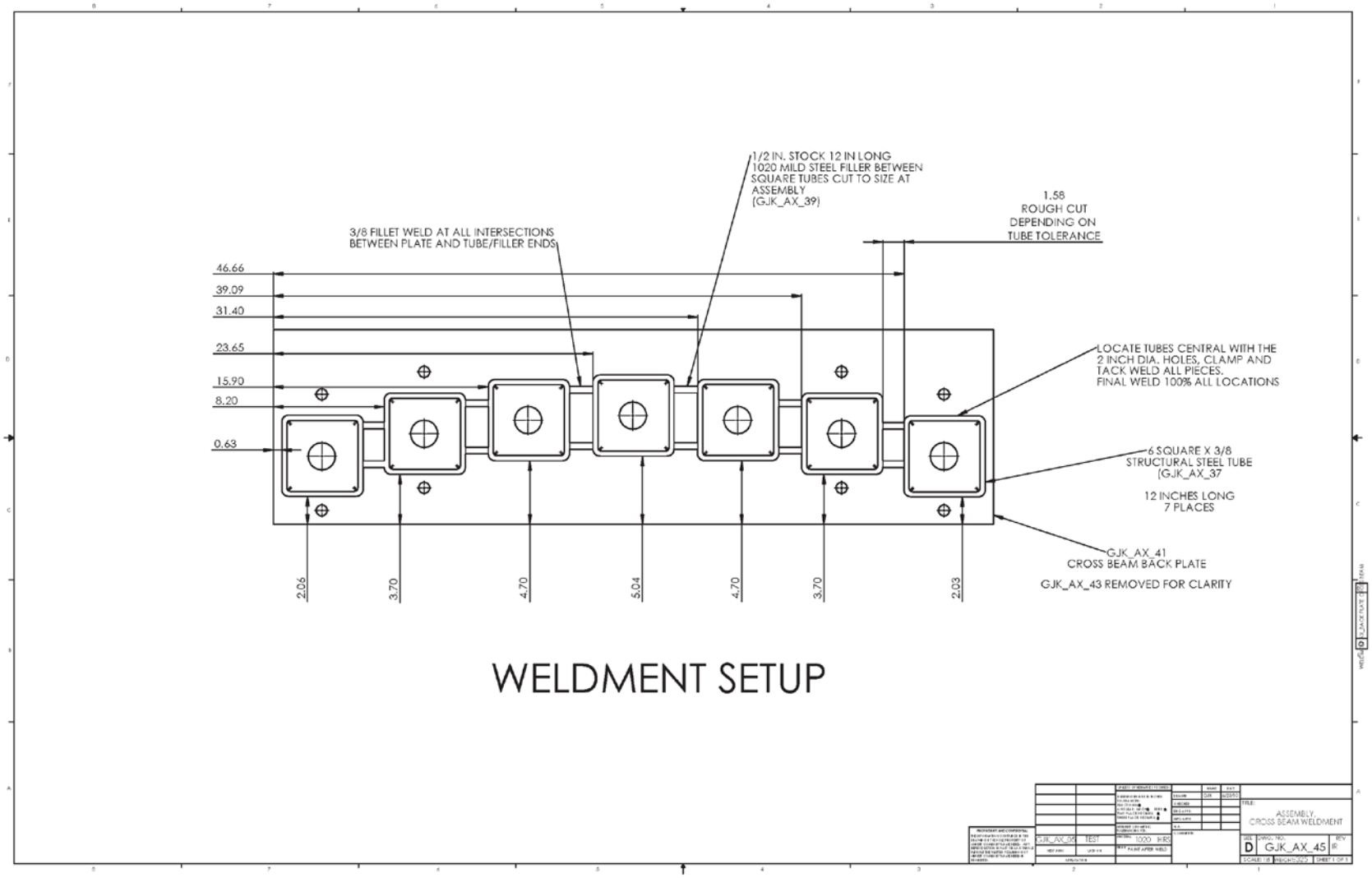

Figure A-41. Axial Loader—Assembly, Cross Beam Weldment (a quantity of 2 was used)

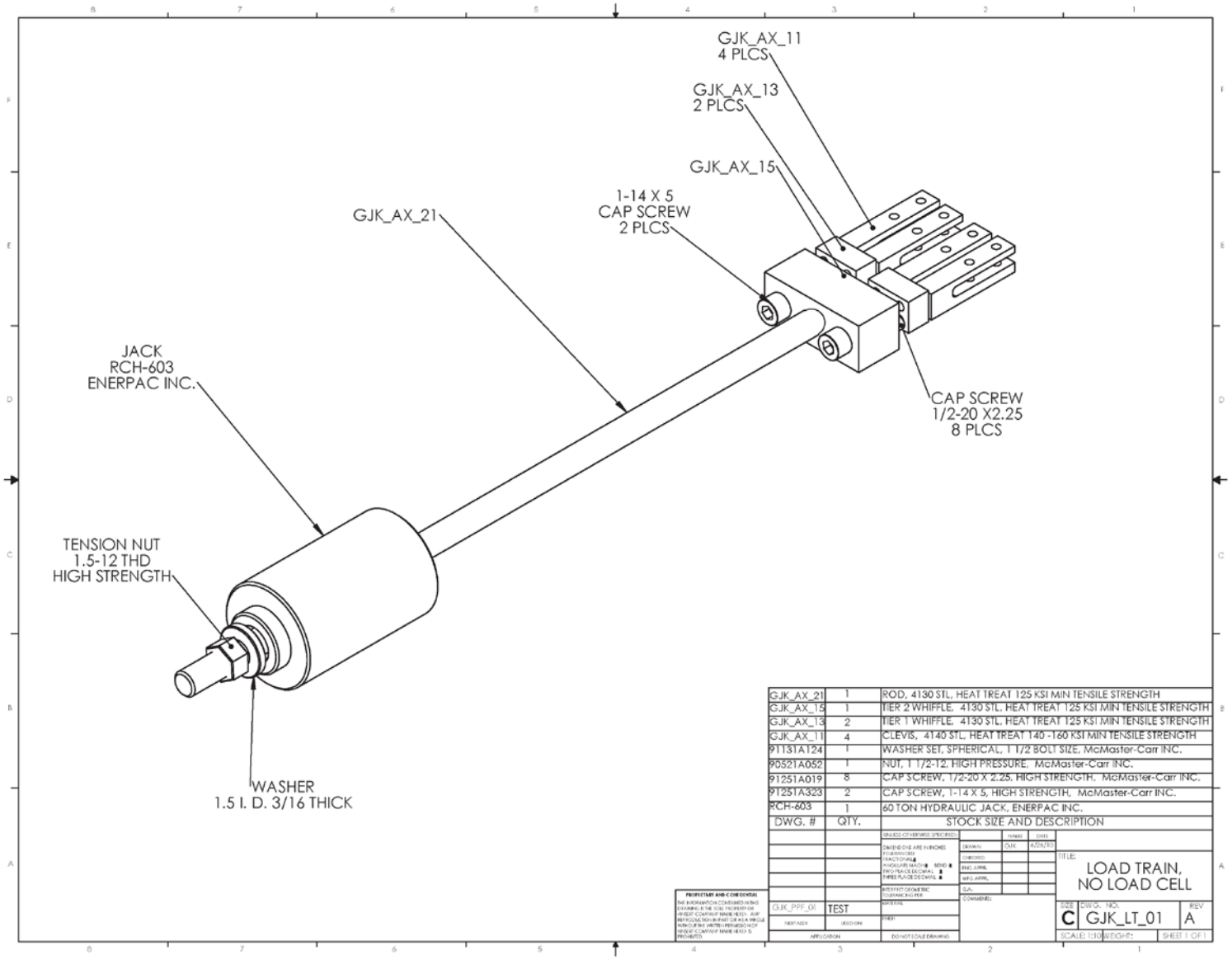

Figure A-42. Load Train, No Load Cell (a quantity of 7 was used)

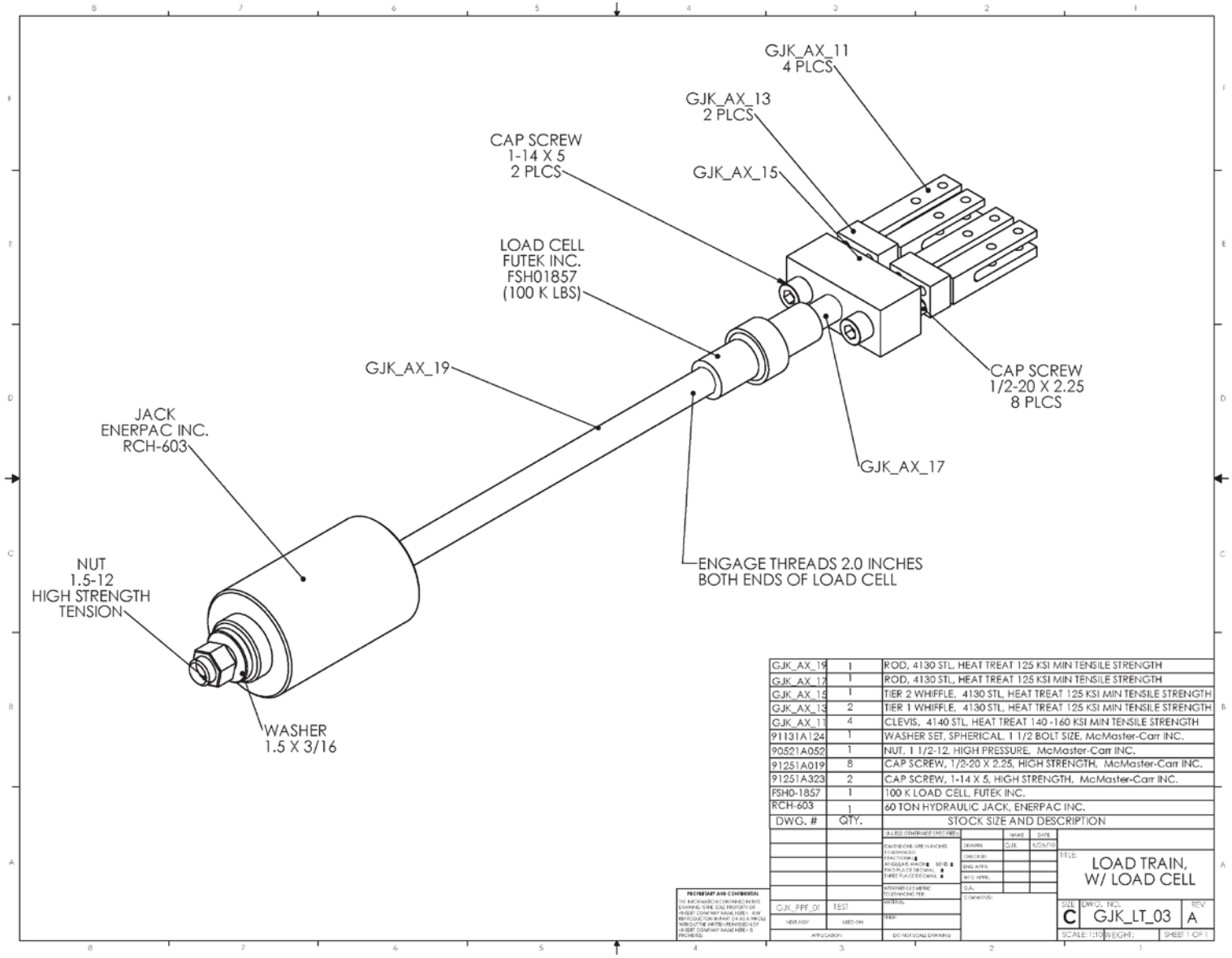

Figure A-43. Load Train, With Load Cell (a quantity of 7 was used)

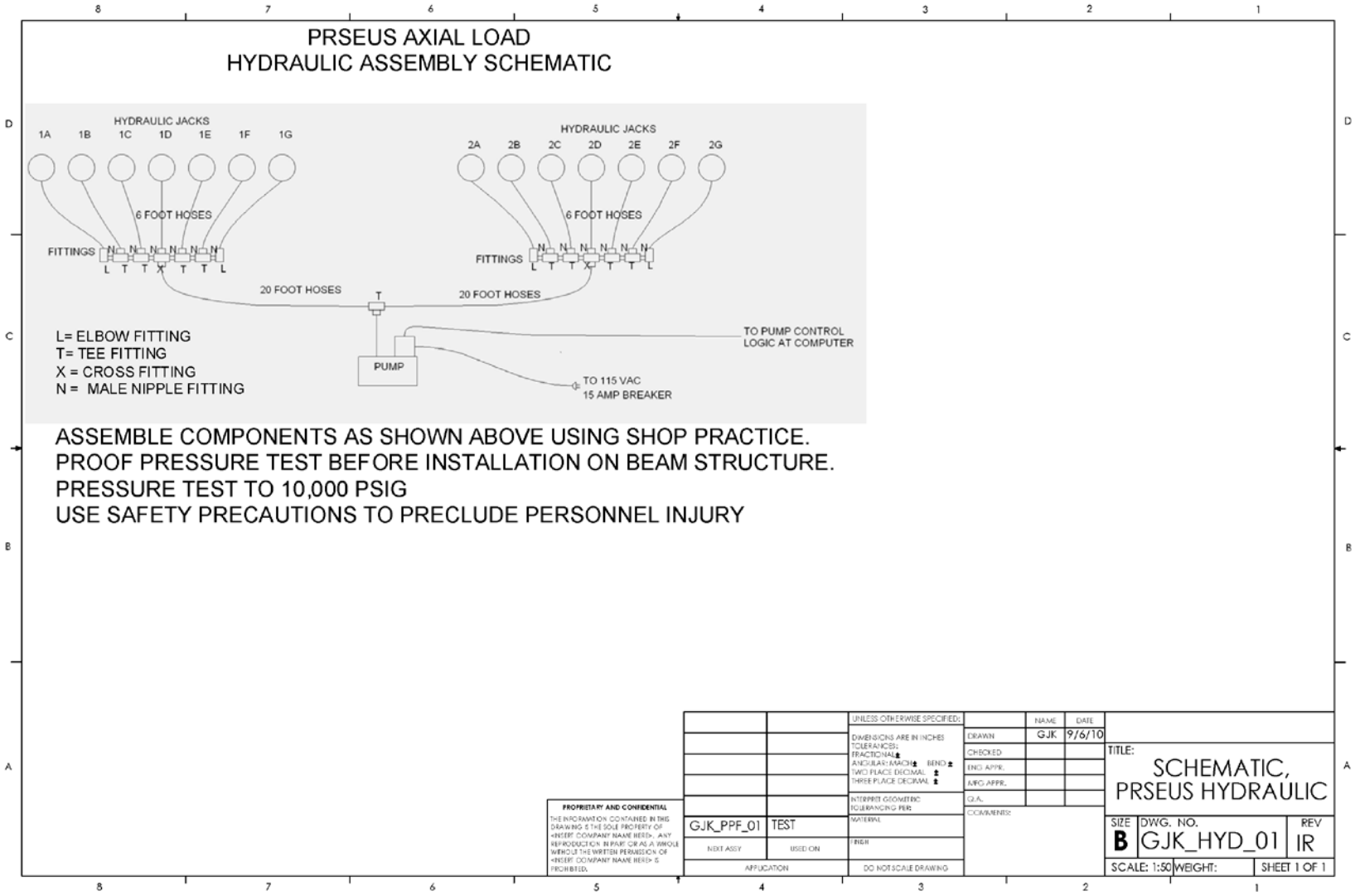

Figure A-44. Axial Loader—Schematic, PRSEUS Hydraulic (a quantity of 1 was used)

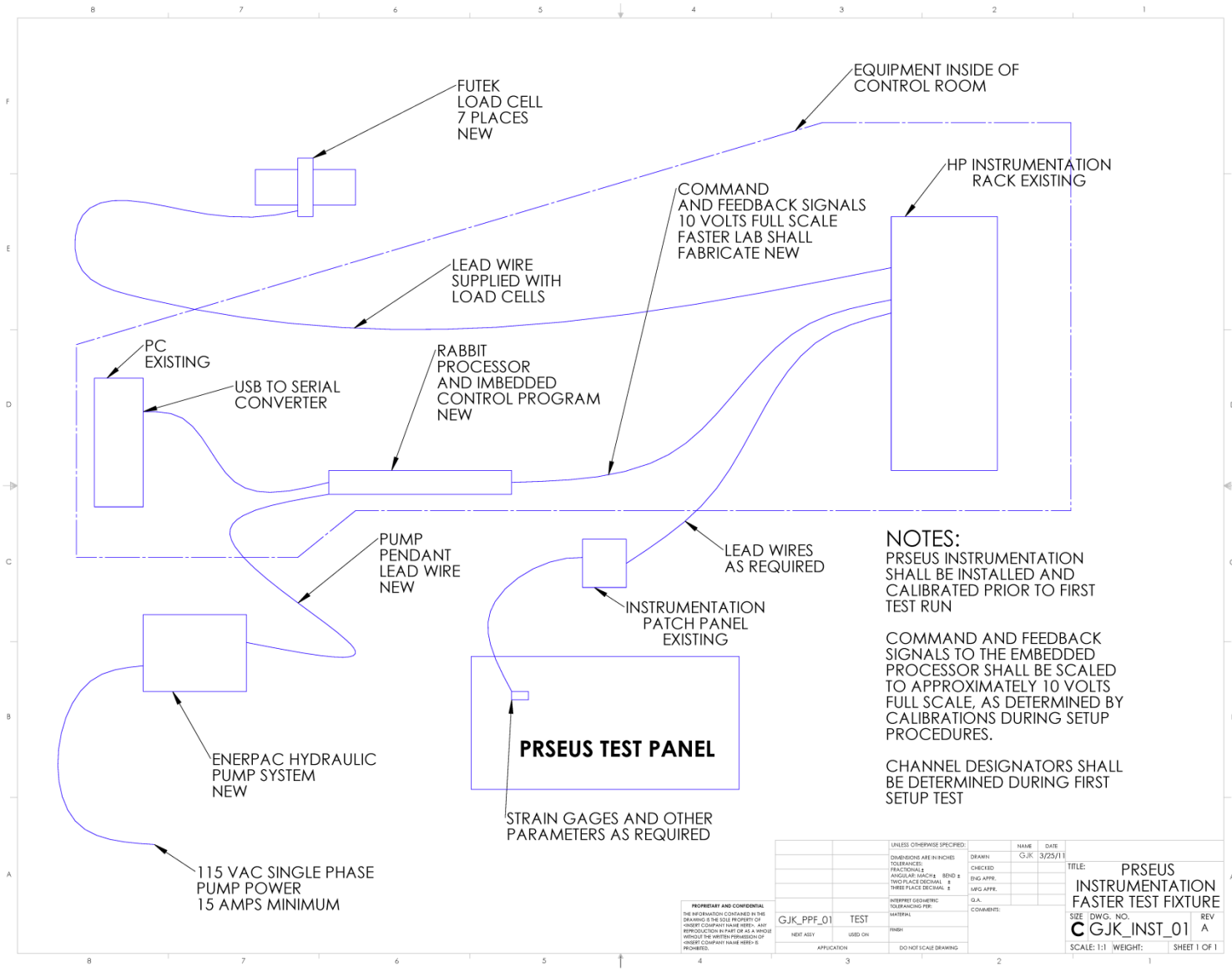

Figure A-45. Axial Loader—PRSEUS Instrumentation, FASTER Fixture (a quantity of 1 was used)

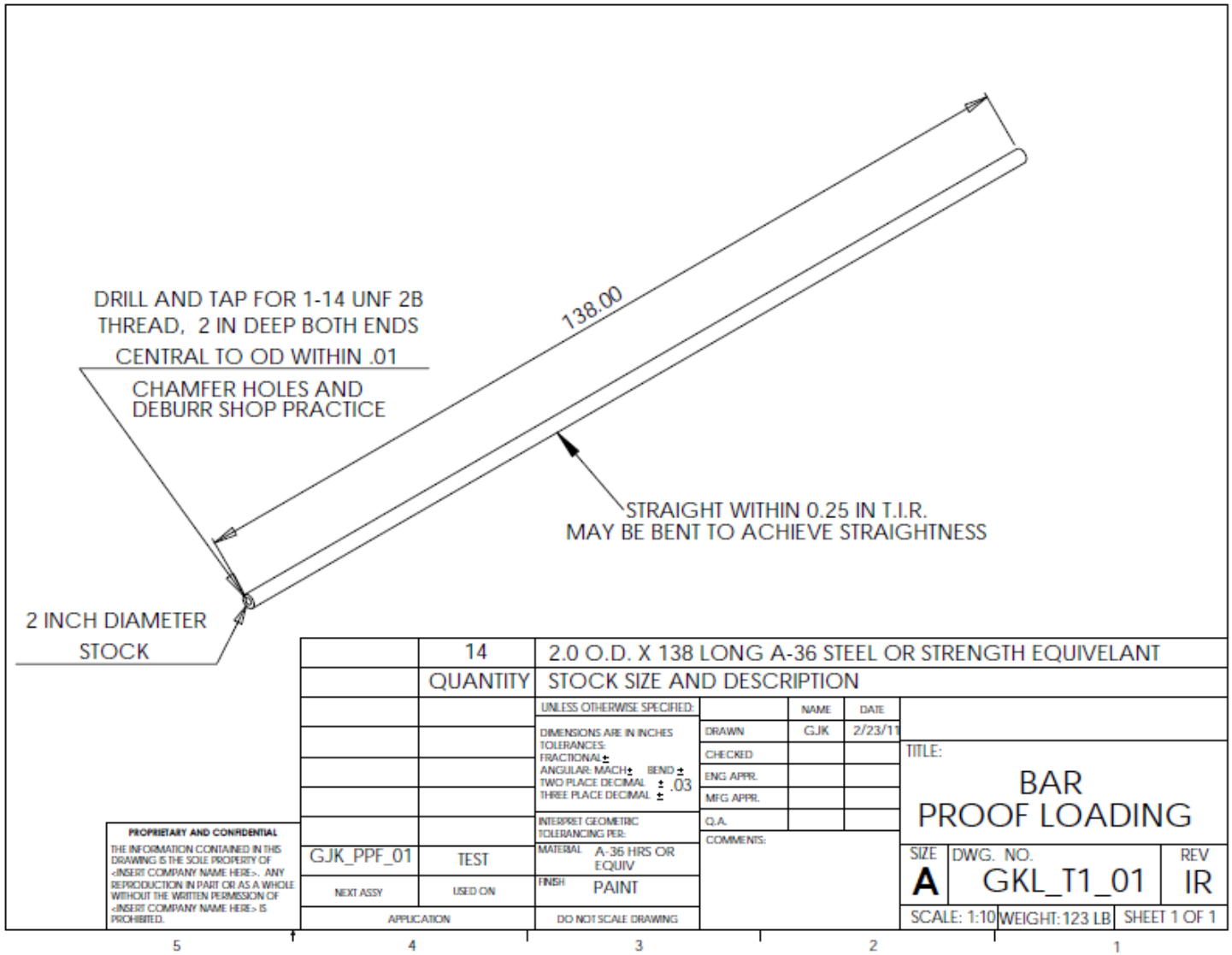

Figure A-46. Axial Loader—Bar, Proof Loading (a quantity of 14 was used)
MODULAR SEAL ENGINEERING DRAWINGS

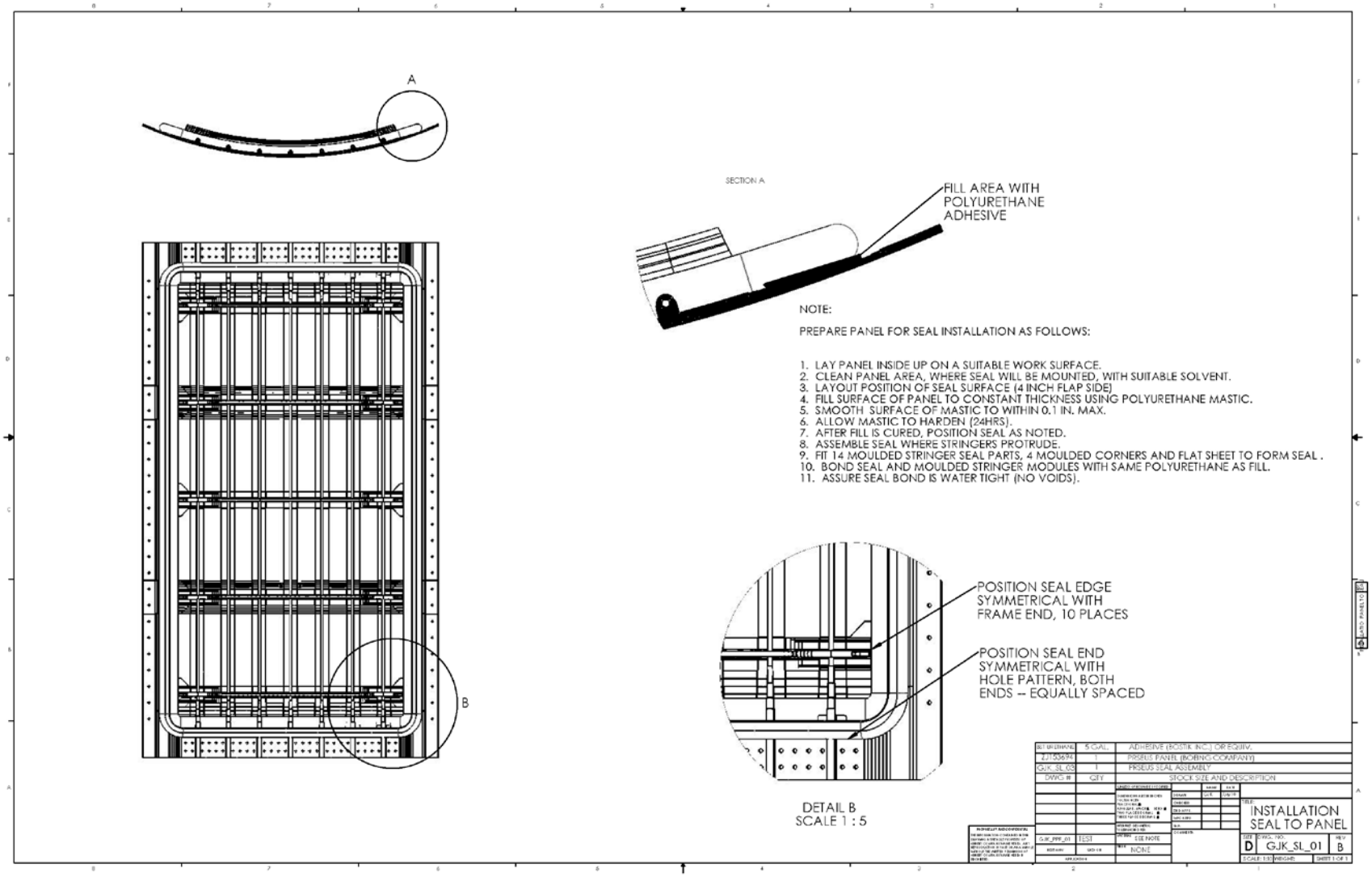

Figure A-47. Modular Seal—Installation, Seal to Panel (a quantity of 1 was used)

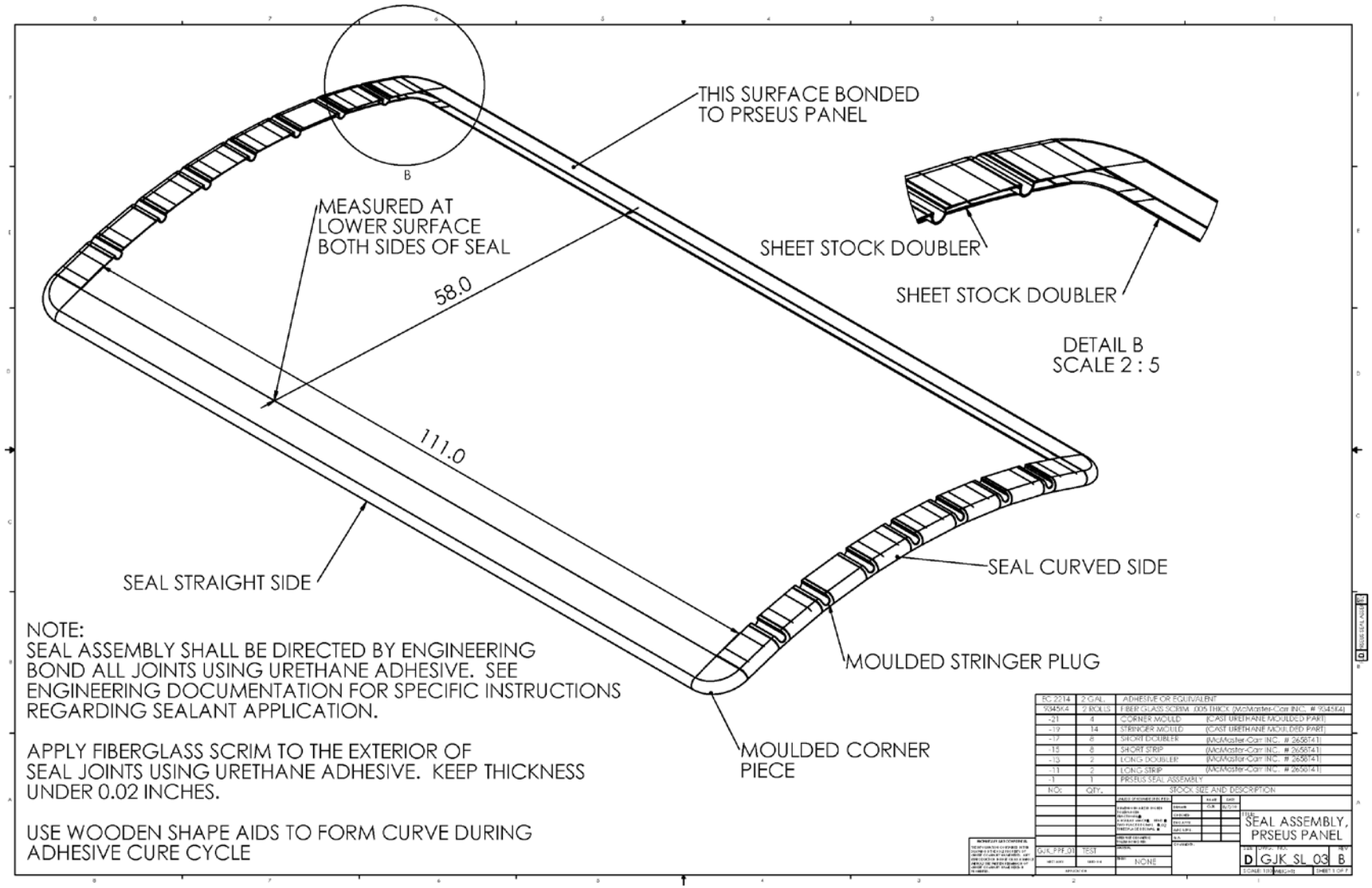

Figure A-48. (a) Modular Seal—Subassembly, Buildup Beam Column (a quantity of 4 was used)

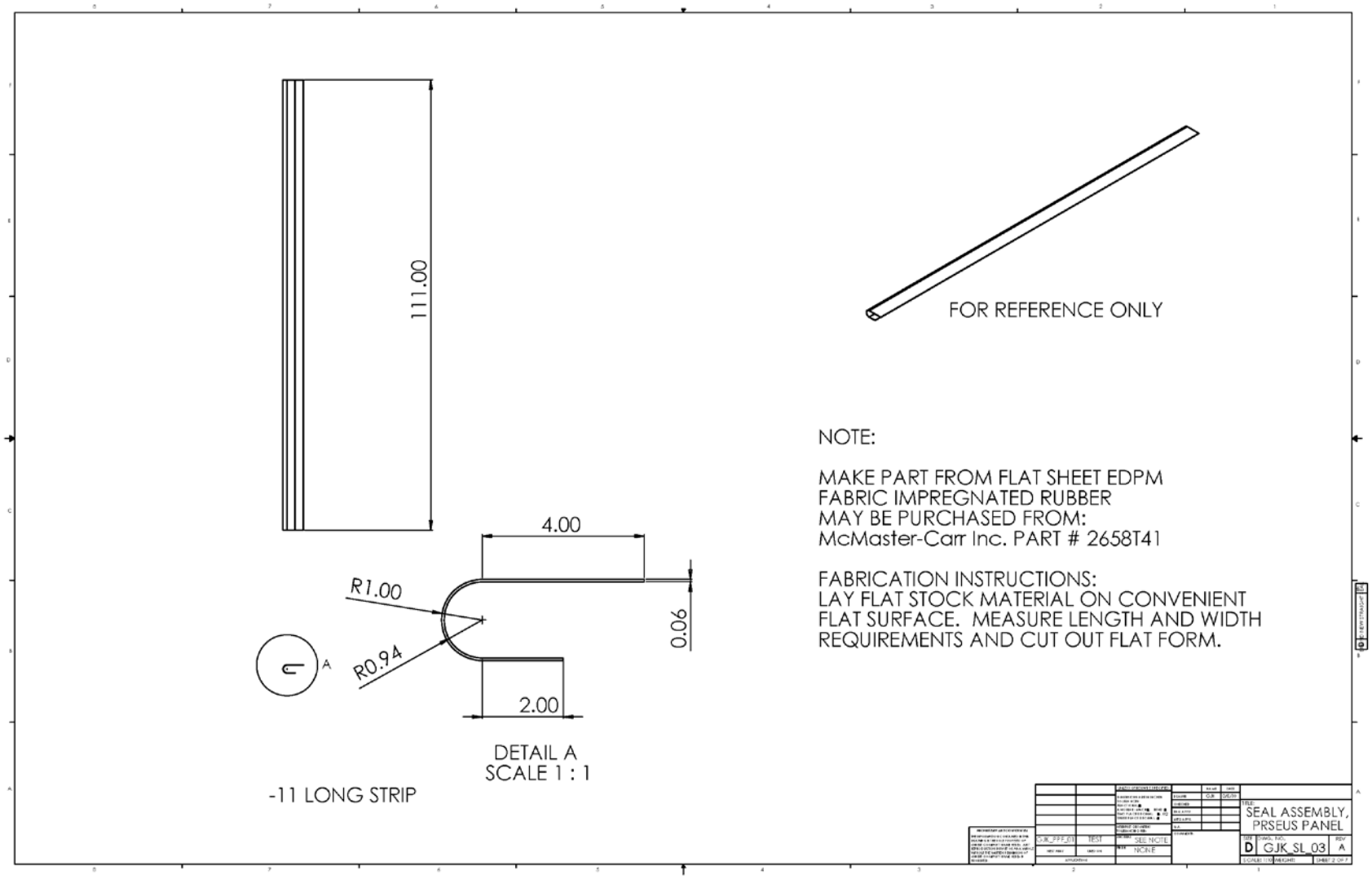

Figure A-48. (b) Modular Seal, Long Strip (-11)

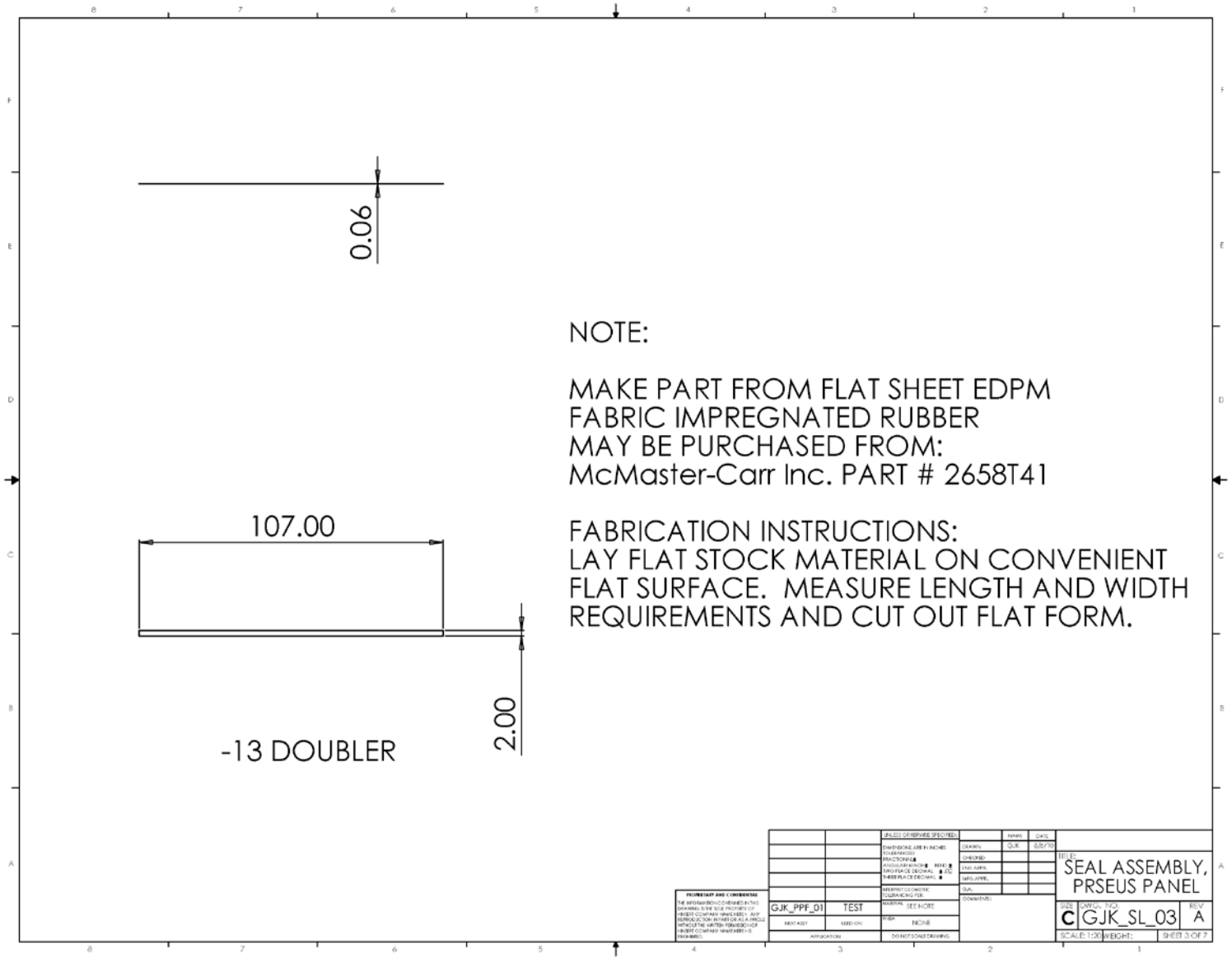

Figure A-48. (c) Modular Seal, Doubler (-13)

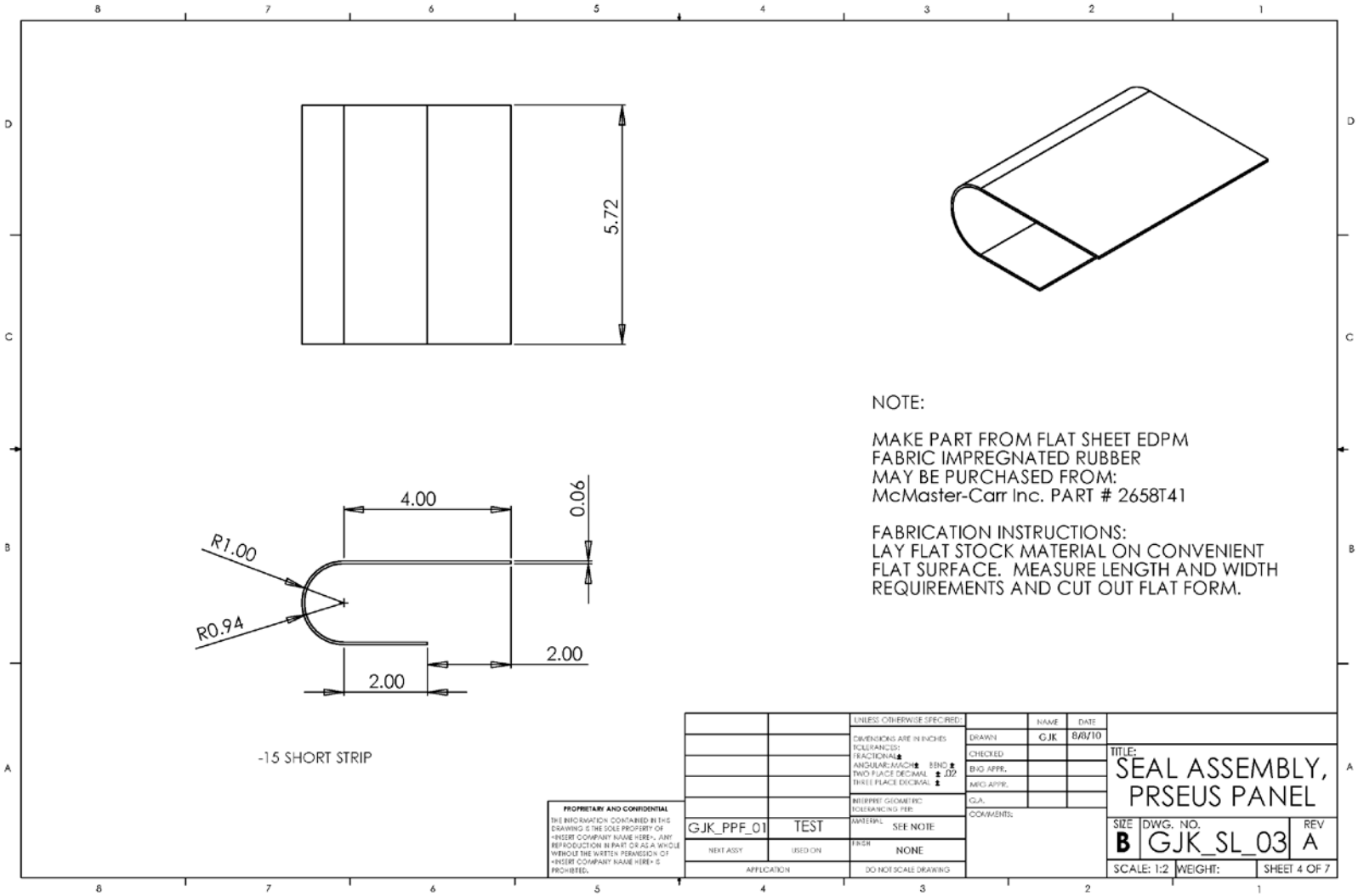

Figure A-48. (d) Modular Seal, Shot Strip (-15)

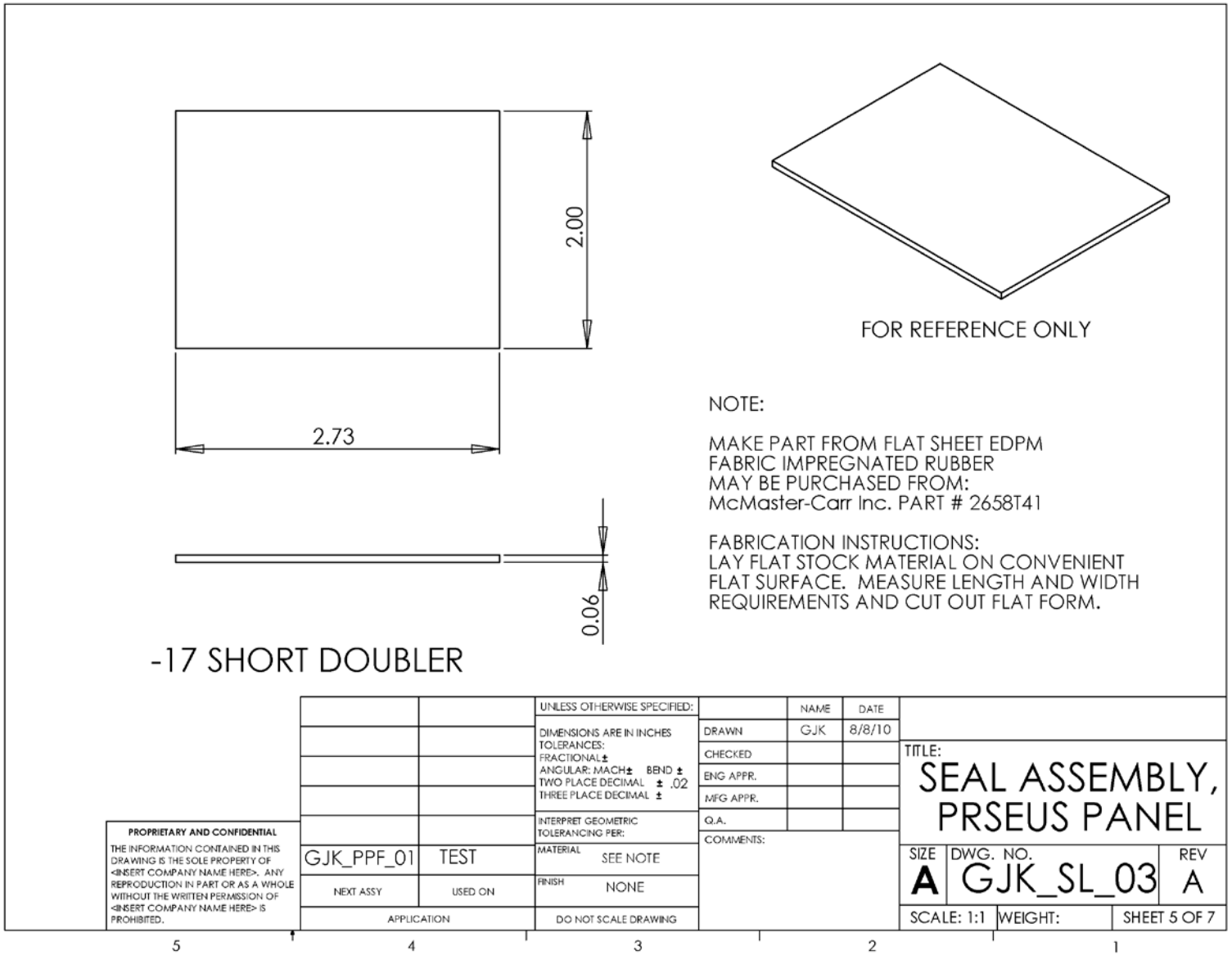

Figure A-48. (e) Modular Seal, Short Doubler (-17)

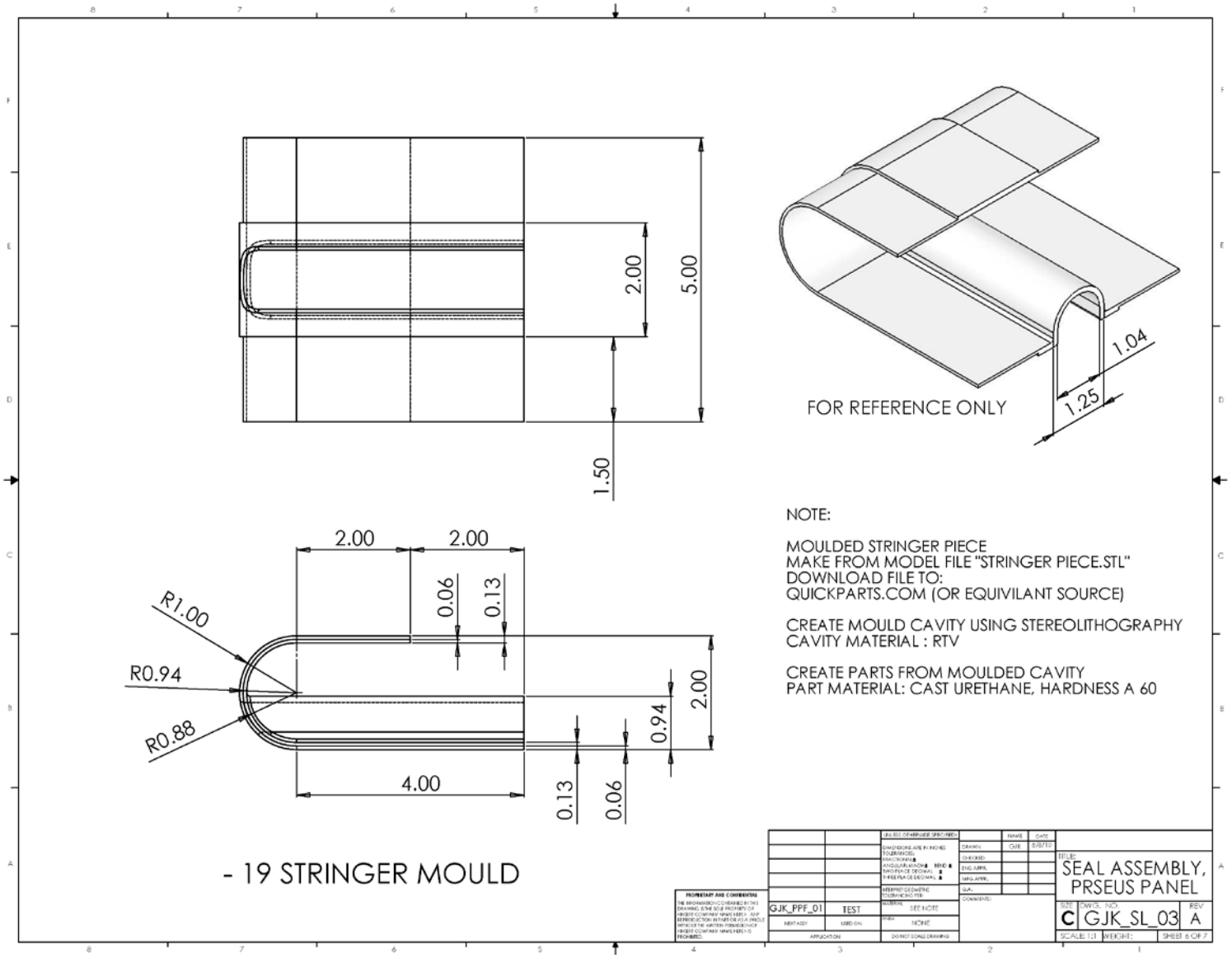

Figure A-48. (f) Modular Seal, Stringer Mould (-19)

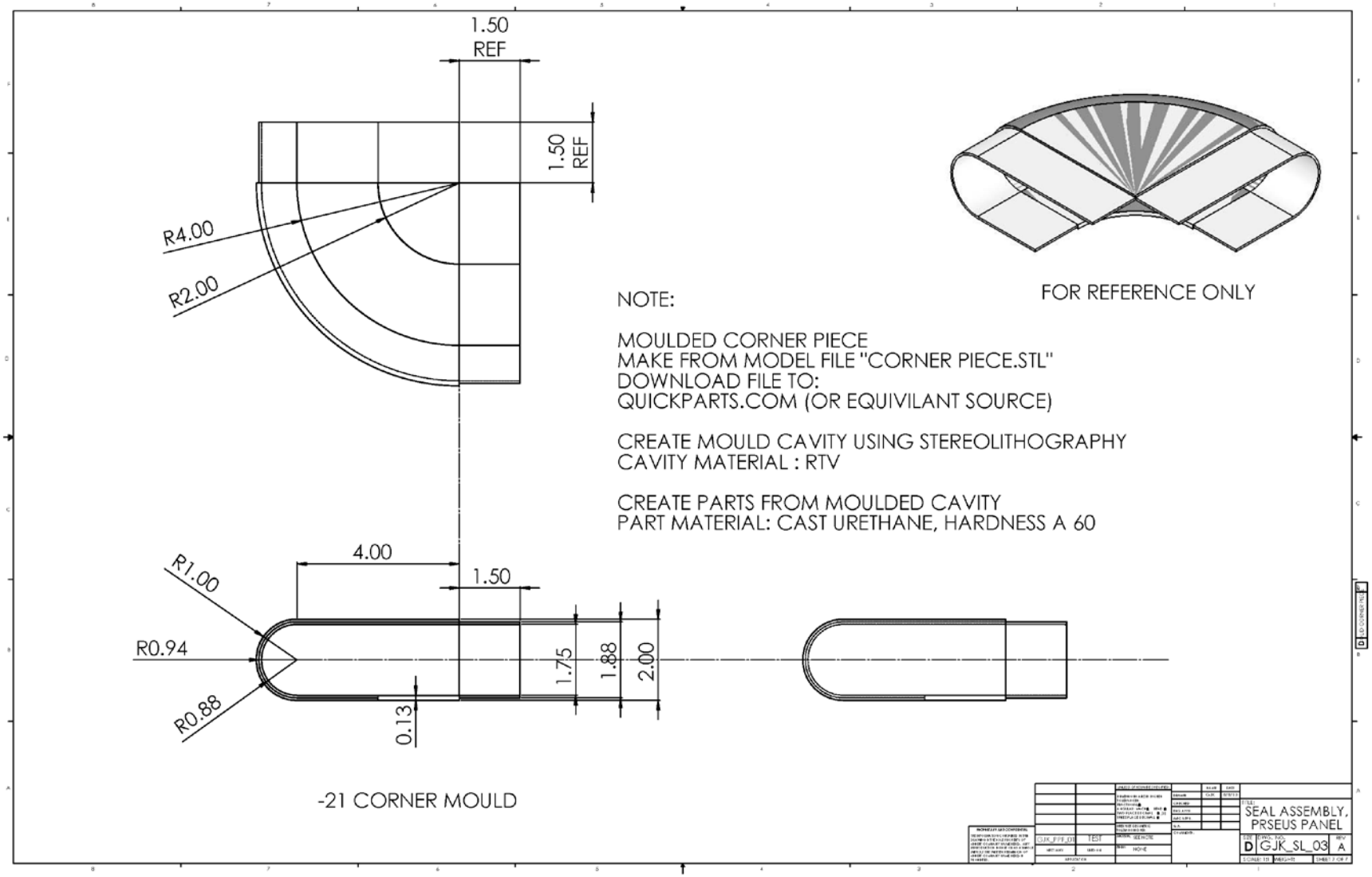

Figure A-48. (g) Modular Seal, Corner Mould (-21)

APPENDIX B—AXIAL LOAD CONTROLLER SOURCE CODE

```
//THIS IS THE FINAL USABLE VERSION OF THE PRSEUS AXIAL LOAD CONTROL PROGRAM
//THIS PROGRAM INCORPORATES LVDT INTERRUPT AND RESTRICTOR VALVE CONTROL
//THIS PROGRAM WAS MODIFIED FOR THE LAST TIME ON 8/25/2011 BY G.J.K.
//THIS PROGRAM CREATES A RUNNING FILE ON THE PC RUNNING DYNAMIC C.  THE FILE NAME
//IS : SAVE DATA.TXT AND CAN BE READ USING A HP VEE PROGRAM CALLED : printf reader from
//dyanmic c live 81911   (last mod to keep pump from cutting out)
//*****************************************************************************
nodebug;
#class auto  // Change local var storage default to "auto"
#include <stdio.h>
#use "BLxS2xx.lib"  // include BLxS2xx series lbrary
#define EINBUFSIZE  31
#define EOUTBUFSIZE 31
#ifndef _232BAUD
#define _232BAUD 57600
#endif
#define STDIO_DEBUG_SERIAL SEDR
#define STDIO_DEBUG_BAUD  115200
//#define STDIO_DEBUG_ADDCR
// blank the stdio screen
// set the STDIO cursor location and display a string
void DispStr(int x, int y, char *s)
{
x += 0x20;
y += 0x20;
printf ("\x1B=%c%c%s", x, y, s);
}
// blank the stdio screen
void  blankScreen(void)
{
printf("\x1Bt");
}
// function prototype for print_time function
void print_time(unsigned long);

void main()
{   //start main
unsigned int   l ;
struct tm      rtc;              // time struct
unsigned long  t0, t1, t2;        // used for date->seconds conversion
float voltage0,voltage1,voltage2,voltage3,voltage4,voltage5;
float zero0,zero1,zero2,zero3,zero4,zero5,valve_open;

long int  i, j, k, m, n, o;
unsigned long dt1;

char dac_mode, sign;
int  hold;
float command,feedback,error,rate,slope,lvdt,count,dump;
char buf[200];
hold = 1;
zero0=0;
zero1=0;
zero2=0;
zero3=0;
```

```
zero4=0;
zero5=0;
lvdt=0;
voltage0=0;
voltage1=0;
voltage2=0;
voltage3=0;
voltage4=0;
voltage5=0;
dump=3;
rate=0;
count=0;
m=0;
i=0;
j=0;
k=0;
l=0;
valve_open =  0;  //1080;
brdInit(); // Initialize the controller
serEopen(_232BAUD);
serMode(0);
serEwrFlush();
serErdFlush();
dac_mode = '1' ; //(key == 1 ? DAC_UNIPOLAR : DAC_BIPOLAR);
anaOutConfig(dac_mode, DAC_ASYNC);

anaInConfig(0, SE0_MODE);   // configure analog system channel 0 , single ended unpolar
anaInConfig(1, SE0_MODE);   // configure analog system channel 1 , single ended unpolar
anaInConfig(2, SE0_MODE);   // configure analog system channel 2 , single ended unpolar
anaInConfig(3, SE0_MODE);   // configure analog system channel 3 , single ended unpolar
anaInConfig(4, SE1_MODE);   // configure analog system channel 4 , single ended bipolar
anaInConfig(5, SE0_MODE);   // configure analog system channel 5 , single ended unpolar

zero0=0;
zero1=0;
zero2=0;
zero3=0;
zero4=0;
zero5=0;

voltage0=0;
voltage1=0;
voltage2=0;
voltage3=0;
voltage4=0;
voltage5=0;

command=0;
feedback=0;
error=0;
dt1 = -1;
for (i = 0 ; i<500; i ++)   //do a summation of 500 analog input readings to //
{                           // average out the noise for zeros //
zero0 = (anaInVolts(0, 1)+zero0);
zero1 = (anaInVolts(1, 1)+zero1);
zero2 = (anaInVolts(2, 1)+zero2);
zero3 = (anaInVolts(3, 1)+zero3);
zero4 = (anaInVolts(4, 2)+zero4);
```

```
zero5 = (anaInVolts(5, 2)+zero5);
}
zero0 = (zero0 * .002);
zero1 = (zero1 * .002);
zero2 = (zero2 * .002);
zero3 = (zero3 * .002);
zero4 = (zero4 * .002);
zero5 = (zero5 * .002);

//*******************************************************************************
 setDigOut(0,1);  //extend off   --- close the pump extend valve
 setDigOut(1,1);  //retract off  --- close the pump retract valve
//*******************************************************************************
 printf("THE RESTRICTOR VALVE IS OPEN ANGLE IS %.1f \n\r",valve_open);
 printf("MOVING THE RESTRICTOR VALVE TO THE RUN POSTION \n\r" );

//*******************************************************************************
// ccw:   FULLY CLOSE RESTRICTOR VALVE   (3 FULL TURNS)
//for (j = 0 ; j<600; j ++) // 200 STEPS PER REVOLUTION
//{   //open j
  // for (i = 0 ; i<10; i ++)  //PLULSE ON
 //  {   // open i
    //  setDigOut(2, 1); //PULSE DIO
    //  setDigOut(3, 0); // DIRECTION DIO
 //  }   //close i
    //  for (i = 0 ; i<50; i ++) //PLULSE OFF
   //{   //open i
      //setDigOut(2, 0); //PULSE DIO
     //setDigOut(3, 0); //DIRECTION DIO
   //}   //close i

   //}   //close j
     // valve_open = (valve_open - 1080);
     // setDigOut(2, 1);  //TURN OFF DIO TO PULSE
     // setDigOut(3, 1);  //TURN OFF DIO TO DIRECTION
//*******************************************************************************
// OPEN RESTRICTOR VALVE  30.6 DEGREES FROM FULLY CLOSED
for (j = 0 ; j<13; j ++)
{      //open j
   for (i = 0 ; i<100; i ++)
   {   // open i
      setDigOut(3, 1); //912
      setDigOut(2, 0);
   }   //close i
   for (i = 0 ; i<100; i ++)
   {   //open i
      setDigOut(3, 1);
      setDigOut(2, 1);
   }   //close i
}      //close j
valve_open = (valve_open + 30.6);
setDigOut(2, 1);  //TURN OFF DIO TO PULSE
setDigOut(3, 1);  //TURN OFF DIO TO DIRECTION

printf("THE RESTRICTOR VALVE OPEN ANGLE IS %.1f \n\r",valve_open);
//*******************************************************************************
tm_rd(&rtc);                  // get time in struct tm
t0 = mktime(&rtc);            // convert struct tm into seconds since 1980
```

```
printf("The system received a run command \n" );
tm_rd(&rtc);
printf("%s\n", asctime(&rtc));
printf("  COUNT   HOLD   LVDT  COMMAND FEEDBACK SLOPE   ERROR    RATE          \n" );

//*************************************************************

while (1)  // set up an infinite loop
{ // top of while loop

//*****************************************************************************
 for (o = 0 ; o < 1 ; o ++)
 {
 if (command  < feedback){    // HP will make feedback > command if error is present due
to Pgain=1
   if (error > .005){          // and measured load is too low
     for (n = 0 ; n<500; n ++) //short delay
   {
   }
   setDigOut(0,0);  //extend on
   for (n = 0 ; n<500; n ++) //short delay
   {
   }
   setDigOut(1,1);            //retract off
   }
 }
//*****************************************************************************

 if (command > feedback){     // HP will make feedback < command if error is present due
to Pgain=1
   if (error > .005){          // and measured load is too high
     for (n = 0 ; n<500; n ++) //short delay
   {
   }
   setDigOut(0,1);            //extend off
    for (n = 0 ; n<500; n ++) //short delay
   {
   }
   setDigOut(1,0);            //retract on
   }
 }
 }
//*****************************************************************************

noupdate:   // place to go if open loop switch OR LVDT interrupt is active ( does not
update pump)
 if (error < .005)
 {
   for (n = 0 ; n<500; n ++) //short delay
   {
   }
   setDigOut(0,1);            //extend off
      for (n = 0 ; n<500; n ++) //short delay
          {
   }
   setDigOut(1,1);            //retract off
   }
voltage0 =  (anaInVolts(0, 1)); // 10 volt range            (measures command from HP)
```

```
voltage1 =  (anaInVolts(1, 1)); // 10 volt range            (measures feedback + error
from HP)
voltage2 =  (anaInVolts(2, 1)); // 10 volt range            (measures switch position for
open loop/closed loop)
voltage3 =  (anaInVolts(3, 1)); // 10 volt range            (measures dump voltage from
HP )
voltage4 =  (anaInVolts(4, 2)); // 5 volt range -2.5 , +2.5 (lvdt measurand input)
voltage5 =  (anaInVolts(5, 2)); // 5 volt range             (slope voltage input from
pot. using 5vdc source)

//*******************************************************************************

command = (voltage0-zero0); //assign names to voltage channels
//if (command < 0) {
//command = 0;
//}
feedback = (voltage1-zero1);//assign names to voltage channels
//if (feedback < 0){
//feedback = 0;
//}
slope = (voltage5-zero5);   //assign names to voltage channels
if (slope < 0 ){
slope = 0;
}
lvdt = (voltage4-zero4);
//if (lvdt > 2.5 ){
//lvdt = 2.5;
//}
//if (lvdt < 0 ) {
//lvdt = 0;
//}                          // keep lvdt readings within expected bounds

anaOutVolts(0,feedback);    //equivelant to SMC feedback B

rate = feedback / lvdt;
if (rate > 7){              //keep record of rate within expected bounds
rate = 7;
}
if (rate < .2){              //keep record of rate within expected bounds
rate = .2;
}
error = (command-feedback); //assign names to voltage channels

dump = voltage3;            //assign names to voltage channel

 if (dump < 2.5){           //2.5check for 5 volt signal from HP --- < 2.5 = dump goto
dumpout;
 hold = 4;                  //set "hold" label to 4 , meaning we are in dump mode
 goto dumpout;
 }

 if (error < 0){
 error = error *-1;          // make error the absolute value of error
 }

 if (m == 1){                // record every other loop to save time to serial port E
(must be read by a terminal program on another computer)
```

```
 sprintf(buf,"%.0f %d %.3f %.3f %.3f %.3f %.3f
%7.3f\r\n",count,hold,lvdt,command,feedback,slope,error,rate); // sent data to serial
port
 serEputs(buf);
 m=-1;
 }
 m=m+1;

 if (k == 9){                // record and print every 10th loop to save time saved to
file named: save data.txt
 printf(" %7.0f ,   %d , %.3f , %.3f , %.3f , %.3f , %.3f ,%7.3f
\r",count,hold,lvdt,command,feedback,slope,error,rate);//,feedback,slope,error,rate);
//write data to screen and log file
 k=-1;
 }
 k=k+1;



hold = 1;                    //set hold status to OK meaning we can allow the servo to
change loads
count = count +1;            // keep track of how many data passes we are accummulating

 if (rate < slope) {         // check for lvdt jump caused by cracking in panel and go to
noupdate if condition is true
   setDigOut(0,1);           //extend off
   setDigOut(1,1);           //retract off
   hold = 2;                 // set hold to 2 meaning we will not allow this system to
change loads
 }

 if (voltage2 < 3.00){       // is  switch in open loop mode?
 setDigOut(0,1);             //extend off
 setDigOut(1,1);             //retract off
 hold = 3;                   // set hold to 3 meaning we are manually opening the control
loop to prevent load changes
 }

 if (voltage2 < 3.00){       // is  switch in open loop mode?
 if (rate < (slope)){        //is rate < slope also?
 setDigOut(0,1);             //extend off
 setDigOut(1,1);             //retract off
 hold = 5;                  // set hold to 5 meaning both hold 2 and hold 3 conditions
are true
  }
  }

  //if (hold > 2) {
  //if (command < 1.5 ){
  //goto open90;
  //}
  //}

  if (hold >1) {
  goto noupdate;             // start place to skip pump updates but keep taking data
  }

 }                           //end of while
```

```
 open90:
 //*****************************************************************************
// OPEN RESTRICTOR VALVE  TO 90 DEG FROM 30.6 DEGREES FROM FULLY CLOSED
if (valve_open > 31)
{
goto noupdate;
}
for (j = 0 ; j<33; j ++)
{      //open j
   for (i = 0 ; i<2; i ++)
   {   // open i
      setDigOut(3, 1);
      setDigOut(2, 1);
   }   //close i
   for (i = 0 ; i<50; i ++)
   {   //open i
      setDigOut(3, 1);
      setDigOut(2, 0);
   }   //close i
}      //close j
valve_open = (90);
setDigOut(2, 1);  //TURN OFF DIO TO PULSE
setDigOut(3, 1);  //TURN OFF DIO TO DIRECTION
printf("\n\r");
printf("THE RESTRICTOR VALVE OPEN ANGLE IS %.1f \n\r\n",valve_open);
goto noupdate;
//*****************************************************************************

 dumpout:                    //place to go if dump (voltage3) is < 2.5 --- HP computer
will set dump line to low state if dump is needed

 setDigOut(0,1);             // make sure extend is off
 setDigOut(1,0);             // make sure retract is on (open valve on pump to retract)

  cw:                        //OPEN RESTRICTOR VALVE 3 TURNS FROM FULLY CLOSED
 printf("open valve 3 to turns  \r\n");  // to remove restriction of hydraulic fluid
during dump (we want to go to zero pressure fast)

 for (j = 0 ; j<583; j ++)   // 3 TURNS - 30.6 DEGREES  (valve is already open 30.6
degrees)
 {   //open j

   setDigOut(3, 1);
   setDigOut(2, 1);

   voltage0 =  (anaInVolts(0, 1));  //GET SOME DATA
   voltage4 =  (anaInVolts(4, 2));  //GET MORE DATA

sprintf(buf," %.3f %.3f\r\n",(voltage4-zero4),(voltage0-voltage0));  //PRINT CRITICAL
DATA TO BUFFER DURNING VALVE OPENING
serEputs(buf);
    //PRINTING DATA TAKES THE TIME NEEDED FOR THE VALVE TO MOVE ONE STEP (DON'T NEED A
LOOP FOR USING TIME)
   setDigOut(3, 1);
   setDigOut(2, 0);

 }  //close j
```

```
   setDigOut(3, 1);
   setDigOut(2, 1);
valve_open = valve_open + 1049.4;
printf("THE RESTRICTOR VALVE IS OPEN ANGLE IS %.1f \r\n",valve_open);
 // END OF VALVE OPENING ROUTINE

   tm_rd(&rtc);                  // get time in struct tm
   t0 = mktime(&rtc);      // convert struct tm into seconds since 1980
   printf("\n");
   printf("The system received a dump command \n" );
   tm_rd(&rtc);
   printf("%s\n", asctime(&rtc));
 // printf("OPERATOR MUST VERIFY PUMP IS AT ZERO PRESSURE AND\n");
 // printf("OPERATOR MUST STOP HYDRAULIC PUMP IF AT ZERO;   NOW! \n");
 // printf("USE MANUAL RETRACT THEN MANUAL PUMP STOP IF NECESSARY\n");
 // printf("PRESS ANY KEY TO STOP RECORDING DATA AND STOP PROGRAM\n");
 // printf("OPEN RESTRICTOR VALVE TO DUMP ALL PRESSURE FROM AXIAL SYSTEM\n");
 // printf("CONTROL  COMMAND  FEEDBACK  LVDT  SLOPE  ERROR    RATE          \n" );
 // printf("\n\n");
 printf(" %6.0f , %d , %.3f , %.3f , %.3f , %.3f , %.3f , %7.3f
\r\n",count,hold,lvdt,command,feedback,slope,error,rate);  //write data to screen and log
file
 while (1) { // stay in this loop recording data until operator turns program off
 /////
 voltage0 =  (anaInVolts(0, 1));
 voltage1 =  (anaInVolts(1, 1));
 //voltage2 =  (anaInVolts(2, 1));    //don't need channel 2
 voltage3 =  (anaInVolts(3, 1));
 voltage4 =  (anaInVolts(4, 2));
 voltage5 =  (anaInVolts(5, 2));

 command=(voltage0-zero0);  //assign names to voltage channels
 feedback=(voltage1-zero1); //assign names to voltage channels
 slope=(voltage5-zero5);   //assign names to voltage channels
 lvdt=(voltage4-zero4);    //assign names to voltage channels
 anaOutVolts(0,command);   //equivelant to SMC feedback B in the HP system
 rate=feedback/lvdt;       //assign names to voltage channels
 error=(command-feedback);  //assign names to voltage channels

 if (error < 0){
 error=error*-1;           // make error the absolute value of error
 }
 hold=4;
 count = count+1;
 if (k == 9){             // record every 10th loop to save time
 printf(" %6.0f , %d , %.3f , %.3f , %.3f , %.3f , %.3f , %7.3f
\r",count,hold,lvdt,command,feedback,slope,error,rate);  //write data to screen and log
file
 k=-1;
 }
 k=k+1;

 if (k == 1){             // record every other loop to save time
 sprintf(buf,"%.0f %d %.3f %.3f %.3f %.3f %.3f
%7.3f\r\n",count,hold,lvdt,command,feedback,slope,error,rate);
 serEputs(buf);
  k=-1;
```

```
}
if (kbhit())
{
printf("\n\n");
printf("          PROGRAM STOPPED: OPERATOR HIT A KEY\r");
printf("\n\n");
tm_rd(&rtc);              // get time in struct tm
t0 = mktime(&rtc);        // convert struct tm into seconds since 1980
tm_rd(&rtc);
printf("%s\n", asctime(&rtc));
setDigOut(0,1);          //extend off
setDigOut(1,1);          //retract off
break;
}
}  //hang here until operator stops program.
} // end of main  (END OF PROGRAM)
```