TECHNICAL DEVELOPMENT REPORT NO. 374

Bird Impact Tests of the Douglas Model DC-8 Airplane Eyebrow And Clear-View Windows

FOR LIMITED DISTRIBUTION

by

John Sommers, Jr.
Roy K. Hackbarth
Roger C. Pate

Aircraft Division

January 1959

LIBRARY
FEDERAL AVIATION AGENCY
NAFEC

FEDERAL AVIATION AGENCY
TECHNICAL DEVELOPMENT CENTER
INDIANAPOLIS, INDIANA

FEDERAL AVIATION AGENCY

E. R. Quesada, Administrator

D. M. Stuart, Director, Technical Development Center

This is a technical information report and does not necessarily represent FAA policy in all respects.

BIRD IMPACT TESTS OF THE DOUGLAS MODEL DC-8 AIRPLANE EYEBROW AND CLEAR-VIEW WINDOWS

INTRODUCTION

Bird impact tests on the Douglas Model DC-8 eyebrow window and redesigned clear-view window were conducted at the FAA Technical Development Center, Indianapolis, Ind., from January 13 to January 29, 1958, and from March 14 to March 21, 1958. The purpose of the eyebrow window tests was to determine, in terms of impact velocity, the ability of this window to resist penetration when struck by a 4-pound bird carcass. Tests of the eyebrow window also were conducted to evaluate structural soundness and the possible hazard to the pilot and copilot resulting from flying window fragments. The purpose of the tests of the clear-view window was to substantiate the adequacy of the electrical heating and the structural changes in design of the window frame and aft side-latch addition which were found to be required as a result of the bird impact tests conducted in April 1957.[1] The clear-view window also was tested to evaluate its glass fragmentation properties. A complete resume of the tests conducted during January and March, 1958, is presented in Table I.

The tests were conducted with the assistance of Messrs. Arthur S. Lundgren, Edward Kolpin, Gray Gunnin, and James LeHew of the Douglas Aircraft Co.

WINDSHIELD INSTALLATION

General.

The cockpit structure and window panels tested were in accordance with Douglas Aircraft Co. drawings listed in Table II. The test article was verified as conforming to these drawings by CAA-designated inspectors, Messrs. B. Robinson and B. B. Farnham, of the Douglas Aircraft Co.

The DC-8 eyebrow window installation tested was a double-panel type consisting of a compound-curved exterior panel made of stretched Plex-55 and a flat interior glass-vinyl-glass panel having an electrical conductive coating on the inward side of the outer ply of glass. Both panels were rectangular in shape, having a height of approximately 14 1/2 inches and width of approximately 12 inches. The exterior stretched Plex-55 panel was mounted by bolting the window edge through rubber insulated holes and a rubber gasket directly to the outer skin of the test structure. The interior panel glass assembly was mounted by bolting the extended 6061-T6 metal insert edge directly to the innermost flanges of a frame intercostal structural network so arranged to provide a continuous

[1]John Sommers, Jr., and Roger C. Pate, "Bird Impact Tests of the Douglas Model DC-8 Airplane Windshield," Technical Development Report No. 348, May 1958.

bolting sill leaving an air space between the exterior and interior panels. This mounting arrangement and the sectional dimensions of the panels are shown in Figs. 1 and 2.

The redesigned clear-view window tested was a double-panel type consisting of a stretched Plex-55 exterior panel and an interior glass-vinyl-glass panel separated by a 3/8-inch air gap. Both panels were bolted in alternating succession to barrel nuts contained in a movable window frame. These two panels were approximately 18 3/4 inches wide by 20 1/2 inches high and were curved to follow the contour of the airplane. The three basic changes made in this window as compared with the original design consisted of (1) the addition of an electrical conductive coating on the inward side of the outer ply of glass for heating the vinyl in the interior panel glass assembly, (2) the addition of a hook-type latch extending from top to bottom to lock the aft window edge in the closed position, and (3) the elimination of a machined recess in the window frame at the upper aft corner which contributed to failure of the frame during the 3-7 and 3-18 tests conducted in April 1957. Figure 3 is a sectional view of the aft sill of this window which also shows a typical arrangement for mounting the inner glass window panel. Figure 3 also notes the panel thickness, DAC part drawing numbers, and the production design of the latching hook incorporated in the window assembly.

The interior panels of both the eyebrow window and clear-view windows tested incorporated the Libbey-Owens-Ford Electropane electrically conductive coatings as noted.

Changes Made During Eyebrow Window Tests.

The frame number located at station 159.5, whose innermost flange is the aft sill for the clear-view window panel assembly, was strengthened by nesting two frames simulating a gauge increase prior to Test No. 22. The Huck Locbolts in the upper sill frame attach clip were changed to 1/4-inch bolts. This change is shown in Fig. 4. Prior to Test No. 23, this frame was replaced by installing a DAC fabricated frame made from 0.125-inch-thick 7075T-6 material also nesting a 0.050-inch-thick normalized chromium-molybdenum (chrome moly) steel stiffening angle which was hand-formed at the test site, nested into the outer flange of the frame. This change is shown in Fig. 5. In addition, prior to Test No. 23, a 0.091-inch-thick 7075-T6 alclad gusset plate made at the test site was incorporated to strengthen the interior panel edge attachment at the upper aft corner. This plate is shown in the photographic results of Test No. 23. Prior to Tests Nos. 24 and 25, the normalized chrome moly steel reinforcing angle mentioned above was replaced by a DAC fabricated 125,000 - 140,000 psi heat-treated chrome moly steel angle. The dimensions of the angle were changed slightly, as shown in Fig. 6. The material for the DAC fabricated reinforcing gusset was changed to 2024-T3 alclad prior to Tests Nos. 24 and 25.

Change Made During Clear-View Window Tests.

The aft hook steel hinge pin size was changed from 0.130-inch to 0.180-inch diameter prior to Test No. 3-28.

TEST PROCEDURE

Freshly killed chicken carcasses were propelled at the test structure by a compressed air gun. To assure a reasonable degree of accuracy of carcass velocity and point of impact on the target window, the chicken carcass was backed by a 6-inch-long Styrofoam plug 6 inches in diameter with a thin plastic disc placed at the aft end of the plug. The chicken carcass, plug, and disc were placed in this order in a light cloth bag which was sewn shut. This arrangement gives the appearance of a projectile approximately 6 inches in diameter and 14 inches long. The combined weight of the carcass, plug, plastic disc, and cloth bag was 4 pounds plus or minus 2 ounces. The weight of the plug, disc, and bag was approximately 5 ounces.

The cockpit structure was positioned so as to line up the desired impact position with the expected line of flight of the projectile. The projectile flight path was determined by sighting through "peep" sights mounted at both ends of the gun barrel. The cockpit base was fastened securely to the test-cell bed, and 4- by 4-inch wood members were positioned between the principal longitudinal members of the cockpit and test-cell backstop to prevent excessive rearward movement of the structure. This mounting arrangement is shown in Fig. 7.

A life-sized clay figure was positioned in the test article so as to represent, as needed, either an actual pilot or copilot body position. The clay figure was used to evaluate possible hazards from flying window fragments. The clay figure was fitted with goggles during each test and was clothed in a light cotton shirt. Damage to the clay figure was repaired as required following each test. In addition, during each test a high-speed camera was focused on the inside face of the test window to aid in evaluating window material fragmentation and to determine the progression of structural damage. Hereafter, in this report, the clay figure will be referred to as either the "pilot" or "copilot."

Both the eyebrow window and clear-view panels were positioned generally with respect to the gun barrel to effect a strike on the geometric center of the windows. As noted in the test results in Table I, actual strike positions varied with each test, thereby providing a fairly comprehensive coverage of both windows relative to strike area.

Velocity measurements were obtained as the bird carcass projectile broke two pairs of fine steel wires positioned apart a distance of 4 feet between the gun muzzle and the target. One pair of wires was connected to a recording oscillograph while the second pair of wires was connected to a direct-reading electronic chronograph. A third method for determining the velocity of the projectile consisted of the film frame count from a

high-speed camera. This method was employed as a check on the oscillograph and chronograph. In determining a velocity from the timing-device measurements, credence normally was given to the measurements which best represented gun-calibration velocities when one or more measurements appeared to be in error. The velocities so selected then were averaged to determine one velocity for each test.

Heating of the test windows was accomplished by applying the proper voltage to the electrically conducting film deposited on a glass surface within the panel assembly being tested by a 400-cps 1.5 KVA inverter and using a DC-8 production heat-control unit connected to a temperature sensitive sensing element built into the vinyl interlayer of the panel. This power-supply arrangement is similar to that which will be installed in the DC-8 airplane and is designed to keep the control point of the conductive coating on the heated windows at an average temperature of 110° F. The cockpit interior was maintained at a temperature of 75° F. by auxiliary electric heaters which were thermostatically controlled.

Eyebrow window temperatures were obtained prior to each test from thermocouples attached to the faces of the exterior and interior panels by means of masking tape. The thermocouples were placed at the geometric center of the outer and inner faces of the exterior stretched Plex-55 panel and the interior glass-vinyl-glass panel assembly. Also, one thermocouple was placed on the outside face of the glass-vinyl-glass panel assembly directly opposite the sensing-element control. The location of these thermocouples is shown in Fig. 8.

Clear-view window temperatures were obtained from thermocouples attached at the geometric centers of the outer face of the exterior stretched Plex-55 panel and the inner face of the interior glass-vinyl-glass panel assembly. In addition, one thermocouple was attached to the inner face of the interior glass-vinyl-glass panel assembly near the temperature sensing element built into the vinyl interlayer and one thermocouple sampled the air-gap temperature. Figure 9 shows the physical location of the thermocouples attached to the clear-view windows.

Cockpit temperatures were obtained from a thermometer located at the same level of the window tested.

TEST RESULTS

Window temperatures and general test conditions are given in Table III.

Test No. 3-21.

The projectile struck on the horizontal centerline of the copilot's eyebrow window about 2 inches aft of the forward window sill. The exterior stretched Plex-55 panel was shattered by the impact as shown in Fig. 10. None of the bird carcass penetrated the interior window, but part of the carcass entered the cockpit area to the rear of the pilot as the aft sill-frame, DAC Part No. 5642814, fractured in two places. This

failure is shown in Figs. 11 and 12. That part of the carcass which entered the cockpit through the void caused by the fractures in the frame generally followed the contour of the fuselage aft of the window. This is shown in Fig. 11. Relative to flying window fragments, the strike position for this test was critical but only a few particles of glass struck the upper right side of the pilot's head. None of these particles penetrated the clay, but merely adhered to it. The copilot, after the test, is shown in Fig. 13.

Test No. 3-22.

Prior to this test, which involved the pilot's eyebrow window, the aft sill-frame, DAC Part No. 5642814, was increased in strength as shown in Fig. 4. The projectile struck approximately 2 inches above the horizontal centerline of the window and immediately forward of the aft sill. This is a critical strike position relative to impact strength of the window arrangement. The exterior panel was shattered by the impact (see Fig. 14), and the aft sill retaining the panel fractured in one place and bent aft from the upper support intercostal sill, as shown in Figs. 15 and 16. The interior panel was not penetrated. When the sill-frame, DAC Part No. 5642814, modified as described previously, for the interior panel again fractured, part of the bird carcass entered the cockpit to the rear of the pilot similar to Test 3-21. This is shown in Figs. 15 and 16. A few particles of glass from the inner face of the interior window impinged upon the top and left side of the pilot's head. None penetrated the clay or was directed toward the pilot's eye area. The pilot, after being exposed to this test, is shown in Fig. 17.

Test No. 3-23.

Prior to this test, which involved the copilot's eyebrow window, the aft sill-frame, DAC Part No. 5642814, was increased further in strength by replacement with a DAC fabricated 0.125-inch-thick frame as shown in Fig. 5, and the addition of a steel reinforcing axle. Also, the upper aft corner retaining arrangement for the interior window panel was strengthened by the addition of a 0.091-inch-thick, 7075S-T6 gusset, as shown in Fig. 18. The bird carcass projectile struck slightly above and approximately 4 inches aft of the target point. There was no penetration of the window and no fracture of the 0.125-inch 7075-T6 aft sill-frame retaining the interior window. See Fig. 18. The frame had a 3/8-inch-deep permanent set pocket centered approximately 5 3/4 inches below the upper sill heel line causing the frame heel to roll 1/4-inch aft. A slight bending tear occurred around five bolt heads retaining the gusset and aft window edge. See Fig. 18. The exterior panel was shattered as shown in Fig. 19. Relatively few particles of glass impinged upon the copilot's head, predominantly on the top and upper right side. Only a few particles penetrated the clay. See Fig. 20.

Test No. 3-24.

Prior to this test, which involved the pilot's eyebrow window, the aft sill-frame, DAC Part No. 5642814, was modified further by using all DAC fabricated increased gauge parts as shown in Fig. 6, including the upper aft corner gusset plate which had a material change from 7075S-T6 alclad to 2024S-T3 alclad. The carcass struck just forward of the target point, which was the window centroid. Upon impact, the exterior stretched Plex panel

shattered and the skin and bolts retaining the panel were damaged, as shown in Fig. 21. There was no penetration of the interior panel although the vinyl interlayer delaminated for a 6-inch length along the aft sill, resulting in a slight tear in the vinyl. In addition, some bending tear occurred around the washers under the five lower bolt heads retaining the upper aft gusset plate. These two points of damage are shown in Fig. 22. Only a few particles of glass impinged upon the pilot's head. None penetrated the clay but merely adhered to it. The pilot is shown in Fig. 23.

Test No. 3-25.

This test involved the pilot's eyebrow window. Modifications to the window supporting structure were identical to those of the preceding test. The carcass struck 3 inches forward and 2 inches below the target point. The exterior stretched Plex-55 panel was shattered and five bolts helping to retain the outer window failed in tension and bending as shown in Fig. 24. There was no penetration of the interior panel. See Fig. 25. A bending tear occurred around the 5 lower bolts bearing against the reinforcing gusset plate and around 11 bolts bearing against the aft window bolting edge. This is shown in Fig. 26. The interior panel vinyl interlayer delaminated for a length of 9 inches along the inner surface of the aft edge metal insert. The band between the metal insert and vinyl along the outer surface of the aft edge of the panel remained intact. A few particles of glass impinged upon the upper and back left side of the pilot's head. One sliver of glass about 1/4-inch long by 1/8-inch square at the large end penetrated the clay approximately 1/16-inch in this area. See Fig. 26A.

Test No. 3-26.

This test involved the pilot's clear-view window. The bird carcass struck the target point shattering the exterior stretched Plex-55 panel and the hydraulic pressure rolled back the aft sill doubler plate, as shown in Fig. 27. Eighteen fasteners retaining the doubler plate failed by forming tuliped heads which allowed them to pull through the doubler material. This action allowed a relatively small part of the bird carcass to enter the cockpit area aft of the pilot position. There was no penetration of the interior window as shown in Fig. 28. The amount and velocity of the glass particles departing from the inner face of the interior window was low. None of these particles penetrated either the pilot's head or clothing although a few particles of bird carcass impinged upon the pilot as shown in Fig. 29. The latching mechanism for the window remained fastened and was operable immediately after the test.

Test No. 3-27.

This test involved the copilot's clear-view window. The bird carcass hit approximately 3 inches forward of the target point. Upon impact, the exterior panel shattered and the interior panel remained intact, as shown in Fig. 30. The force of the impact loaded the aft window hook in such a manner that the 0.130-inch steel hinge pin failed in shear. As expected, the high-speed movies of the test indicated that failure occurred initially at the upper end of the hinge and progressed rapidly

downward zipper fashion. This allowed the upper sill hook to unlatch and the window was forced inward striking the copilot a severe blow on the right side of the head, as shown in Fig. 31. The hook hinge halves were not damaged, however. The final disposition of the window and associated parts is shown in Fig. 32.

Test No. 3-28.

Prior to this test, which involved the pilot's clear-view window, the hinge pin for the aft window latch was increased in size to 0.180-inch diameter, as shown in Fig. 3. The bird carcass hit approximately 2 inches below and 3 inches forward of the target point. The exterior panel shattered completely and the aft doubler plate facing was rolled back slightly as 13 fasteners failed. This is shown in Fig. 33. A small amount of bird carcass extruded through the opening at the upper aft corner of the window. That part of the carcass which extruded into the cockpit passed to the rear of the pilot. There was no penetration of the interior panel, as shown in Fig. 34. High-speed movies of this test indicated that flying glass from this panel was noticeably greater in both quantity and velocity compared with Test No. 3-26. None of the glass penetrated the pilot's head or clothing and none was directed toward the pilot's eye area. The track and latches were all functional. After impact, the window was opened and moved aft to check operation. See Fig. 34A.

Test No. 3-29.

Prior to this test, which involved the copilot's clear-view window, the successful operation of the aft full-length latch suggested a possibility of the elimination of the upper sill latching hook, and DAC Part No. 3641243 was removed. Upon impact the two support points at the forward and aft latches were not sufficient to contain the bending of impact which resulted in fracture of the window frame. The window was forced open, hitting the copilot on the side of the head. See Fig. 35. High-speed movies of the test indicated that hydraulic pressure from bird carcass fluids forced the window inward at the upper aft corner. The excessive bending resulted in fracture of the window frame, as shown in Fig. 35, thereby allowing the aft hook to become disengaged. Inspection of the side of the copilot's head showed no large indentations in the clay, thereby indicating that the window frame had lost most of its kinetic energy at the time of contact. As shown in Fig. 36, the aft doubler facing was not damaged as severely as in tests in which the window remained locked in position.

CONCLUSIONS

Eyebrow Window.

1. The eyebrow window arrangement, as shown in DAC Drawing No. 5653470, Rev. B, and Figs. 1 and 2, will withstand satisfactorily the impact of a 4-pound bird carcass at a velocity as high as 485 mph provided the following structural modifications are incorporated:

   a. The aft sill-frame, DAC Part No. 5642814, is strengthened as shown in Fig. 8.

b. The upper and aft metal insert edge of the interior window is strengthened to equal that obtained by incorporating a 0.091-inch-thick 2024S-T3 gusset plate, as shown in Figs. 24 and 26.

2. The minimum vinyl temperature required for the eyebrow window to develop the resistance to penetration as determined from these tests is 105° F.

3. There is no appreciable hazard presented to either pilot or copilot from a bird strike on any position of the window since the glass fragments, which depart from the interior panel, are directed predominantly aft of the pilot position. There was no indication in any of the tests that any particles were being directed so far forward as the pilot's eye area.

Clear-View Window.

1. This window, modified by the addition of an aft hook-type latch and the addition of an electrically conducting film heating unit for the interior panel, as shown in DAC Drawings Nos. 5702471, Rev. F, and 5613217, Rev. D, will resist penetration satisfactorily, and failure of the latching mechanism will not occur under an impact velocity as high as 430 mph.

2. This same window configuration will resist penetration satisfactorily, and failure of the latching mechanism will not occur at a velocity as high as 481 mph provided the aft hook hinge pin is increased in diameter from 0.130-inch to 0.180-inch, as shown in Fig. 3.

3. The minimum vinyl temperature required for the clear-view window to develop resistance to penetration as determined from these tests is 100° F.

4. The results of the tests indicate that there is no appreciable fragmentation hazard presented to the pilot or copilot. Should a bird strike the window, there undoubtedly would be some extrusion of entrail fluids into the cockpit area directly behind the pilot or copilot but this condition also is not considered to be hazardous to them.

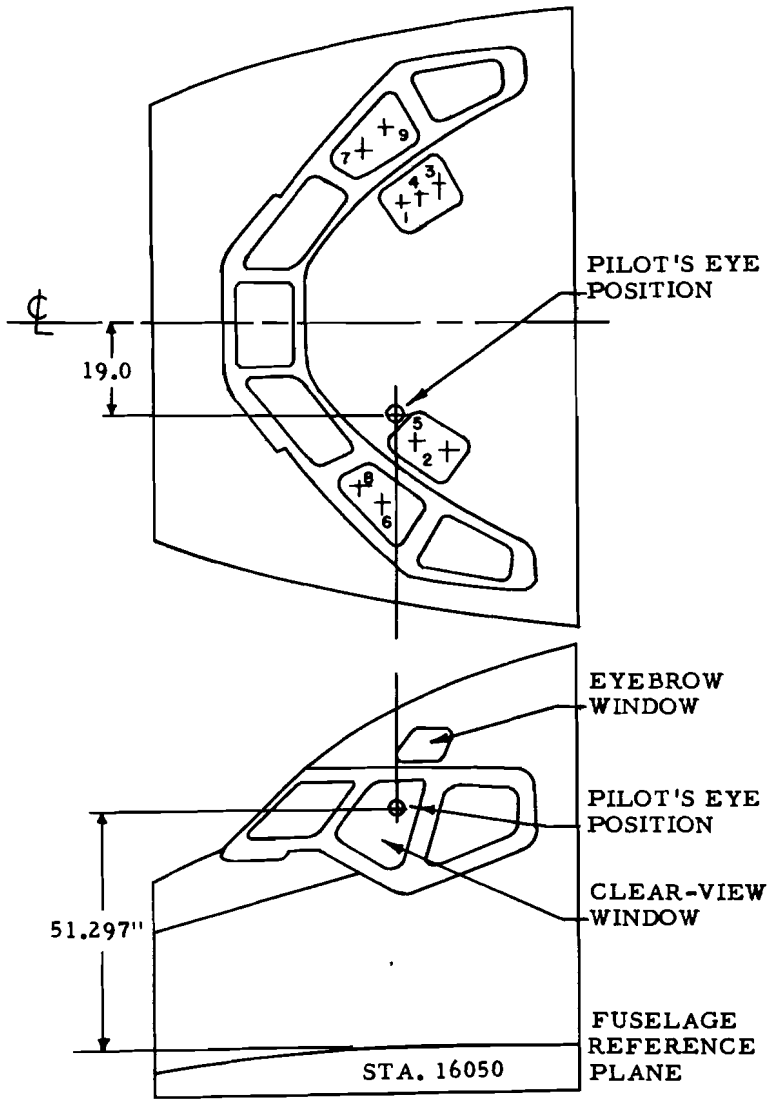

TABLE I

POSITION OF IMPACT-
DOUGLAS DC-8 CANOPY

Test No.	Impact Point (Ref. Dwng.)	Projectile Velocity (mph)	Results
3-21	1	388	* No penetration.
3-22	2	**413	* No penetration.
3-23	3	**397	No penetration.
3-24	4	432	No penetration.
3-25	5	485	No penetration.
3-26	6	430	No penetration.
3-27	7	485	*** No penetration.
3-28	8	481	No penetration.
3-29	9	486	**** No penetration.

* Failure of the sill frame supporting structure allowed part of bird carcass to enter the cockpit.

** See Table III.

*** Failure of the aft hook latching mechanism pin allowed window to open upon impact.

**** Failure of window frame due to trial elimination of the upper sill latch allowed the window to unlatch upon impact.

TABLE II

DOUGLAS DC-8 DRAWINGS

Eyebrow Window

Drawing No.	Title	Revision
5653470	Test-Rework Cockpit Upper Window Installation	B
5702980	Panel Assembly - Inner Upper Window	B
5702947	Insert-Cockpit Enclosure Upper Window	A
5703909	Panel Assembly - Cockpit Upper Outer Window	A

Clear-View Window

Drawing No.	Title	Revision
5613215	Track Installation	C
5613067	Enclosure Installation - Cockpit Upper Sills	C
5613213	Window Installation	B
5613217	Window Assembly	D
5702471	Panel Assembly	F
5615112	Panel-Acrylic Outer	E
5703952	Rework-Post Aft	None
4641305	Fitting-Aft Hook Engaging	A
4652526	Track-Lower	None
4652525	Support-Lower Track Forward	B
4652524	Support-Lower Track Aft	A
3641243	Bar Assembly-Lock Upper	C
3641306	Fitting-Forward Hook Engaging	C

TABLE III

TEST CONDITIONS

Test No.	Date 1958	Window Tested	Projectile Velocity (mph)	Interior Cockpit Temp. (°F.)	Outside Air Temp. (°F.)	Sensing Element	Window Temperatures °F. Outside Face Exterior Panel	Inside Face Exterior Panel	Outside Face Interior Panel	Inside Face Interior Panel	Air Gap
3-21	1/13	Copilot Eyebrow	388	75	48	108	60	77	105	98	---
3-22	1/16	Pilot Eyebrow	413	78	33	103	46	70	114	98	---
3-23	1/21	Copilot Eyebrow	397	74	44	106	53	73	112	98	---
3-24	1/28	Pilot Eyebrow	432	76	29	103	40	65	110	97	---
3-25	1/29	Pilot Eyebrow	485	76	30	111	42	67	111	98	---
3-26	3/14	Pilot Clear-View	430	72	42	99	60	--	---	101	97
3-27	3/17	Copilot Clear-View	485	74	42	95	59	--	---	98	100
3-28	3/19	Pilot Clear-View	481	74	40	95	55	--	---	100	90
3-29	3/21	Copilot Clear-View	486	76	38	96	56	--	---	99	95

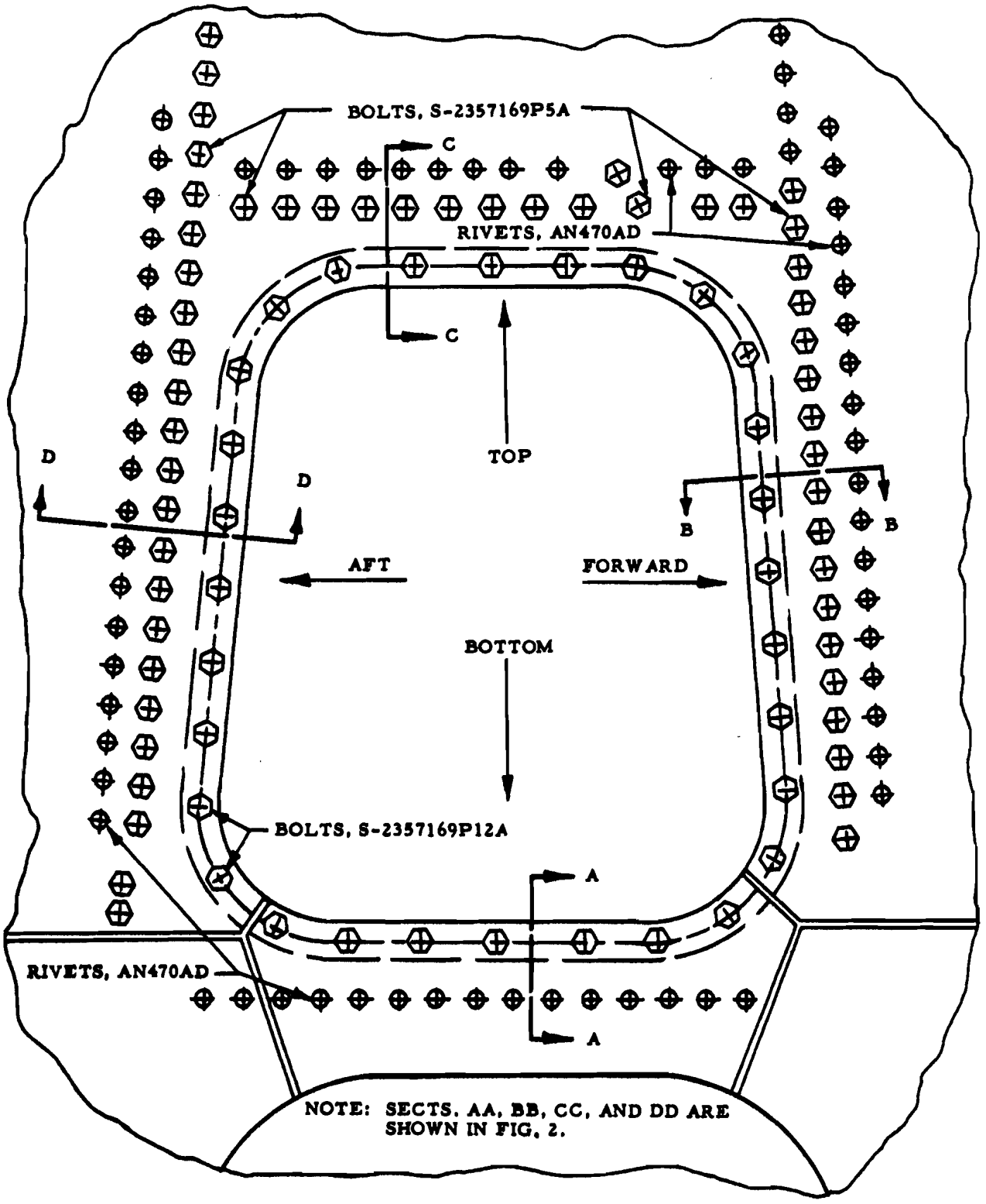

FIG. 1 EYEBROW WINDOW INSTALLATION EXTERIOR VIEW COPILOT'S SIDE

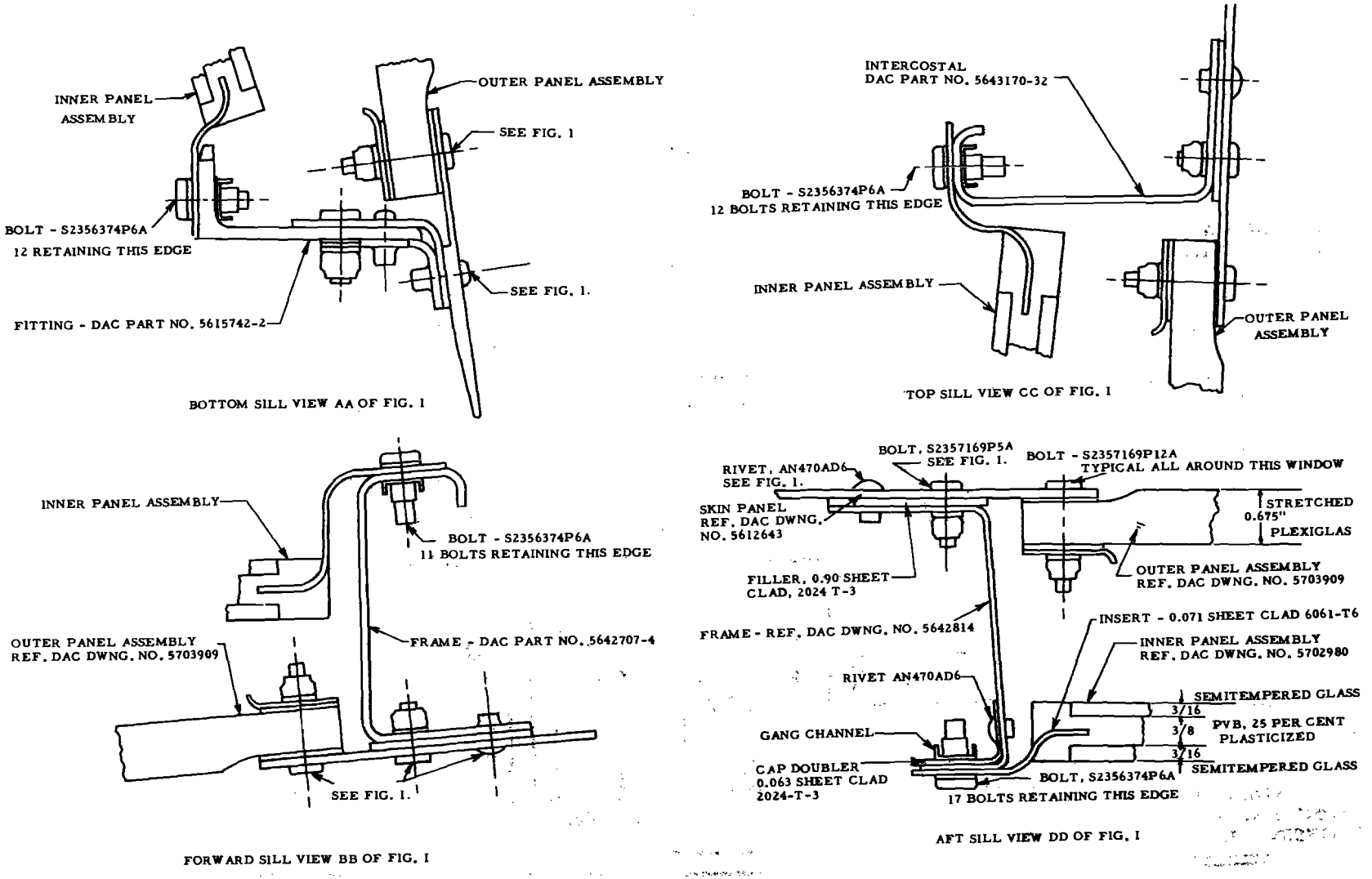

FIG. 2 SECTIONAL VIEW OF EYEBROW WINDOW
REF. DAC DRAWING NO. 5653470

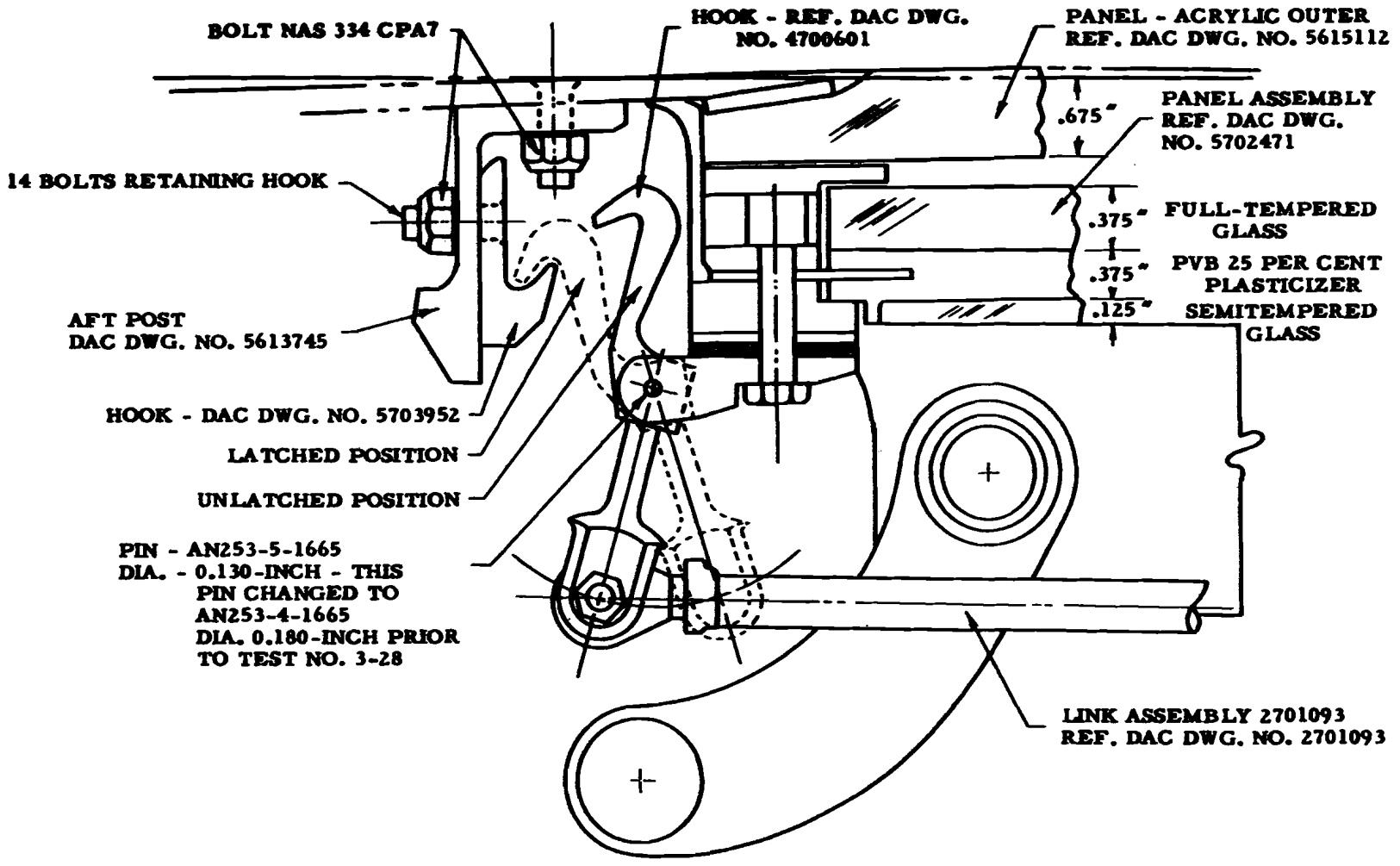

FIG. 3 SECTIONAL VIEW OF AFT SILL - CLEAR-VIEW WINDOW ASSEMBLY REF. DAC DRAWING NOS. 5613067 AND 5615112

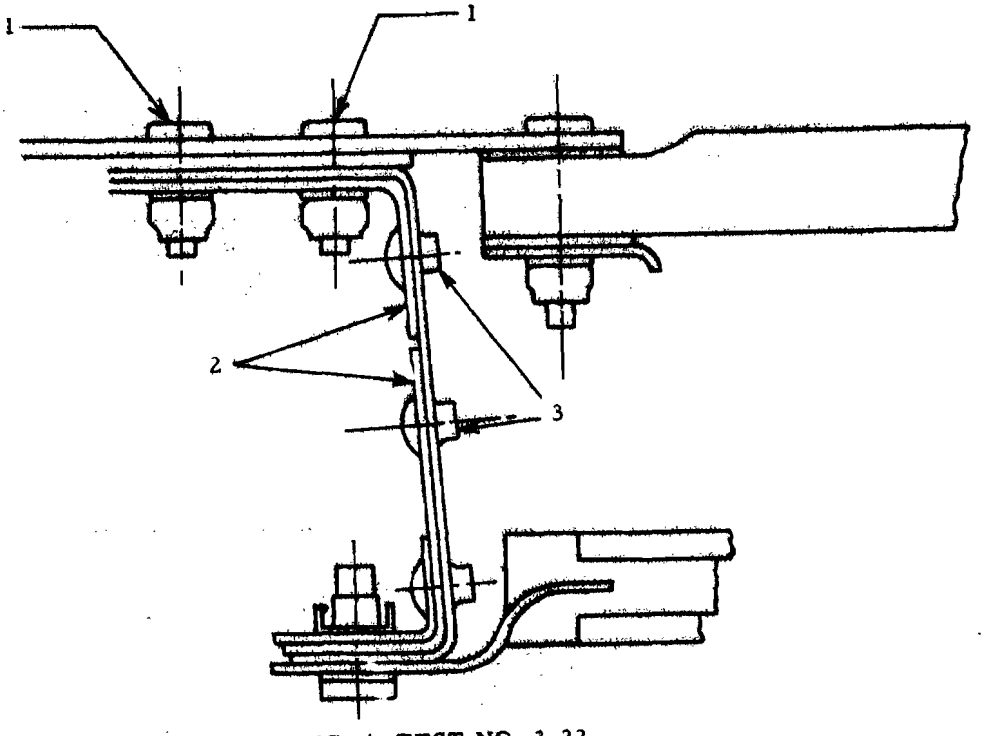

FIG. 4 TEST NO. 3-22

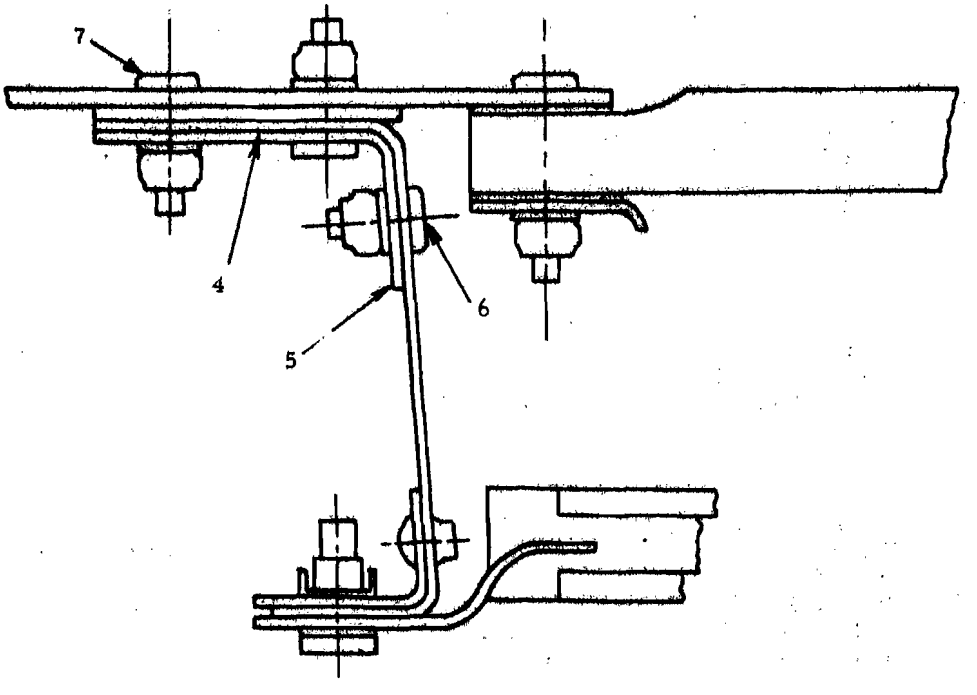

FIG. 5 TEST NO. 3-23

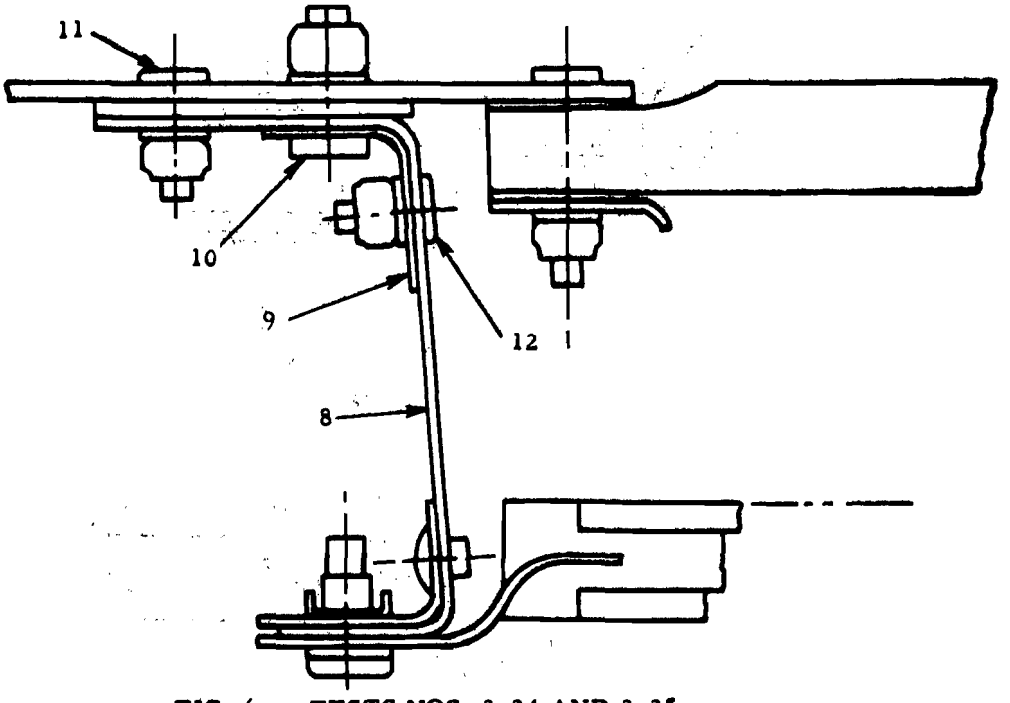

FIG. 6 TESTS NOS. 3-24 AND 3-25

*AFT SILL MODIFICATION, TESTS 3-22 THROUGH 3-25

TEST NO. 3-22

1. BOLT, S-2357169P5A, REPLACES RIVET, AN470AD6.
2. A SECOND FRAME, 5642814, WAS SPLIT AND ATTACHED TO THE ORIGINAL FRAME, 5642814.
3. RIVETS, AN470AD6, SPACED 1 INCH ON CENTER.

TEST NO. 3-23

4. FRAME, 5642814, INCREASED IN THICKNESS TO 0.125-INCH.
5. STIFFENING ANGLE, 0.050-INCH-THICK CM ANNEALED STEEL.
6. BOLTS, S-2357169P5A, SPACED 1 INCH CENTER.
7. BOLT, S-2357169P5A, REPLACES RIVET, AN470AD6.

TESTS NOS. 3-24, 3-25

8. FRAME, 5642814, INCREASED IN THICKNESS TO 0.125-INCH.
9. STIFFENING ANGLE, 0.050-INCH-THICK CM ANNEALED STEEL, HEAT-TREATED TO 125,000 - 140,000 PSI.
10. BOLT, S-2356374P6A, REPLACES BOLT, S-2357169P5A.
11. BOLT, S-2357169P5A, REPLACES RIVET, AN470AD6.
12. BOLT, S-2357169P5A, SPACED 1 INCH ON CENTER.

* MODIFICATIONS ARE GIVEN WITH REFERENCE TO THE AFT SILL OF TEST NO. 3-21, SHOWN IN FIG. 2

FIG. 7 TEST STRUCTURE MOUNTING ARRANGEMENT

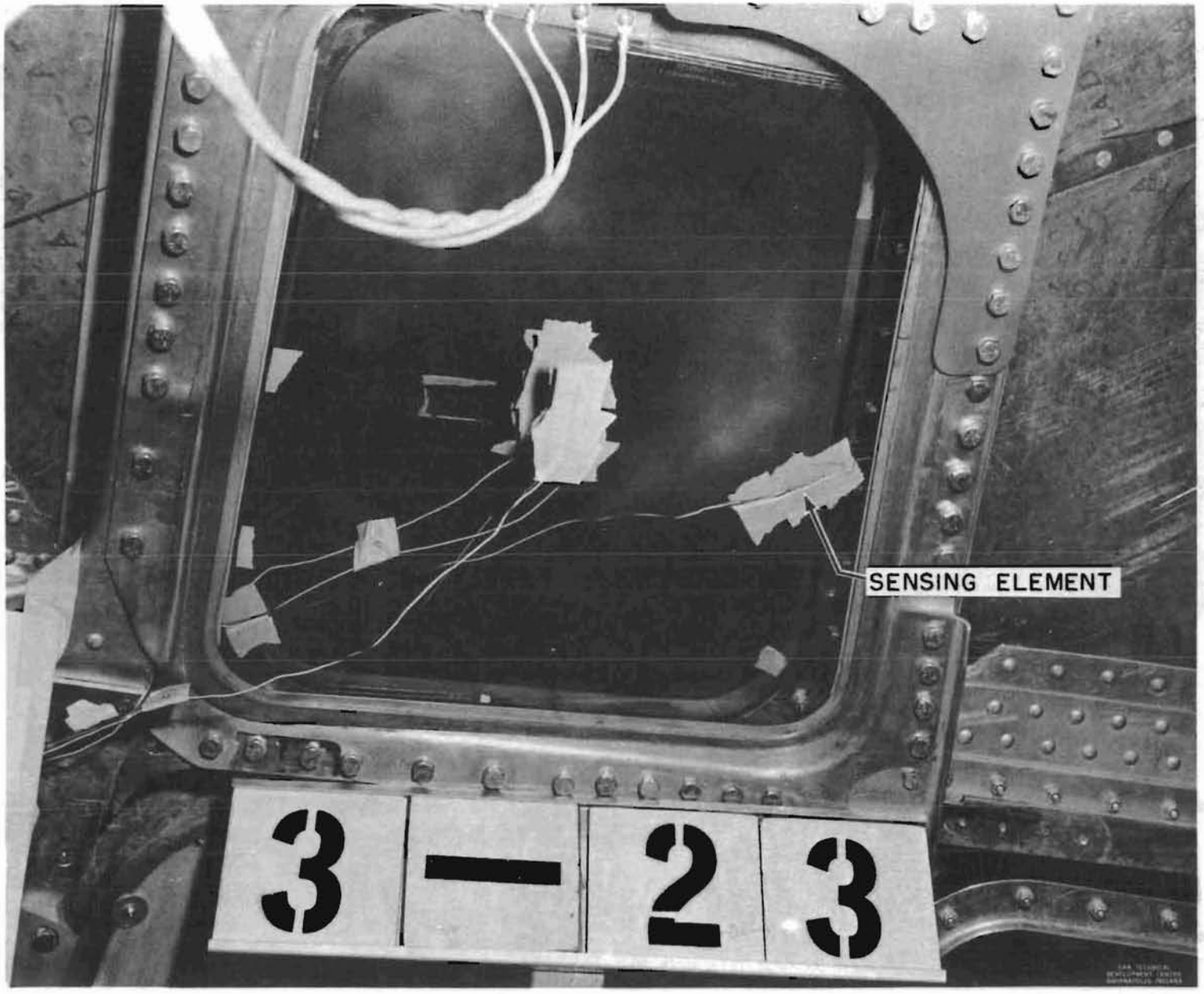

FIG. 8 THERMOCOUPLE LOCATIONS FOR THE EYEBROW WINDOW

FIG. 9 THERMOCOUPLE LOCATIONS FOR THE CLEAR-VIEW WINDOW

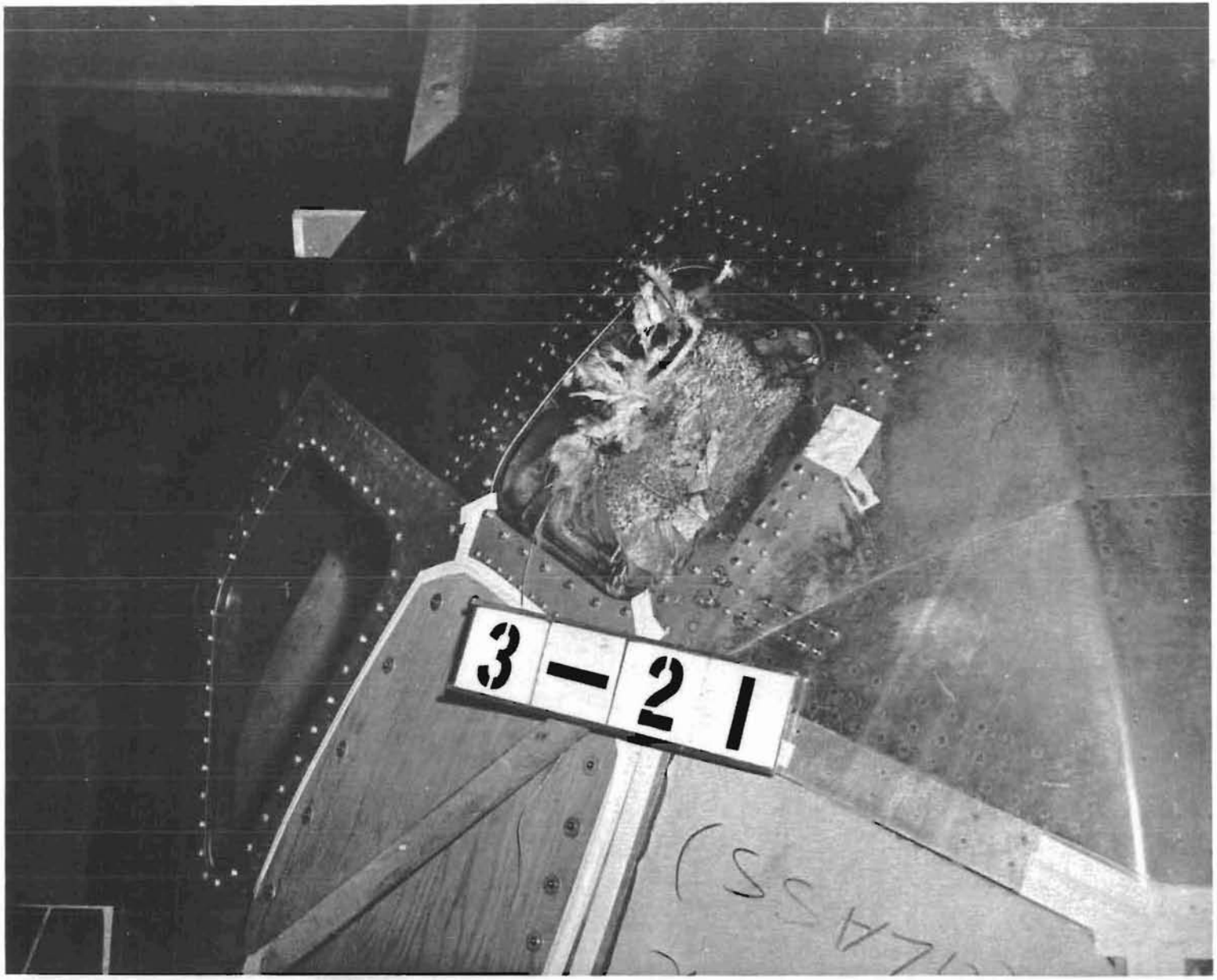

FIG. 10 TEST 3-21 - COPILOT EYEBROW WINDOW, EXTERIOR VIEW - PROJECTILE VELOCITY 388 MPH

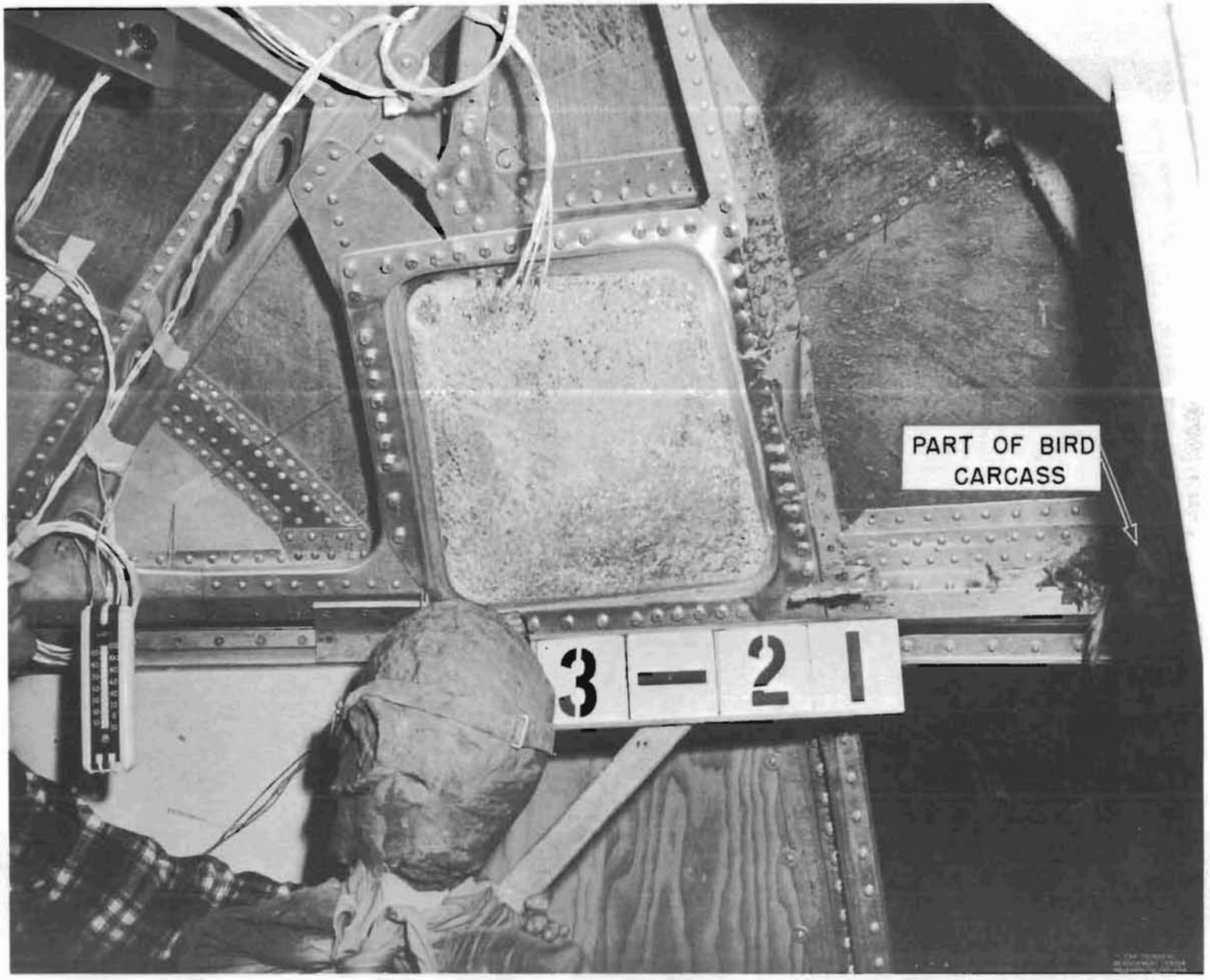

FIG. 11 TEST 3-21 - COPILOT EYEBROW WINDOW, INTERIOR VIEW - PROJECTILE VELOCITY 388 MPH

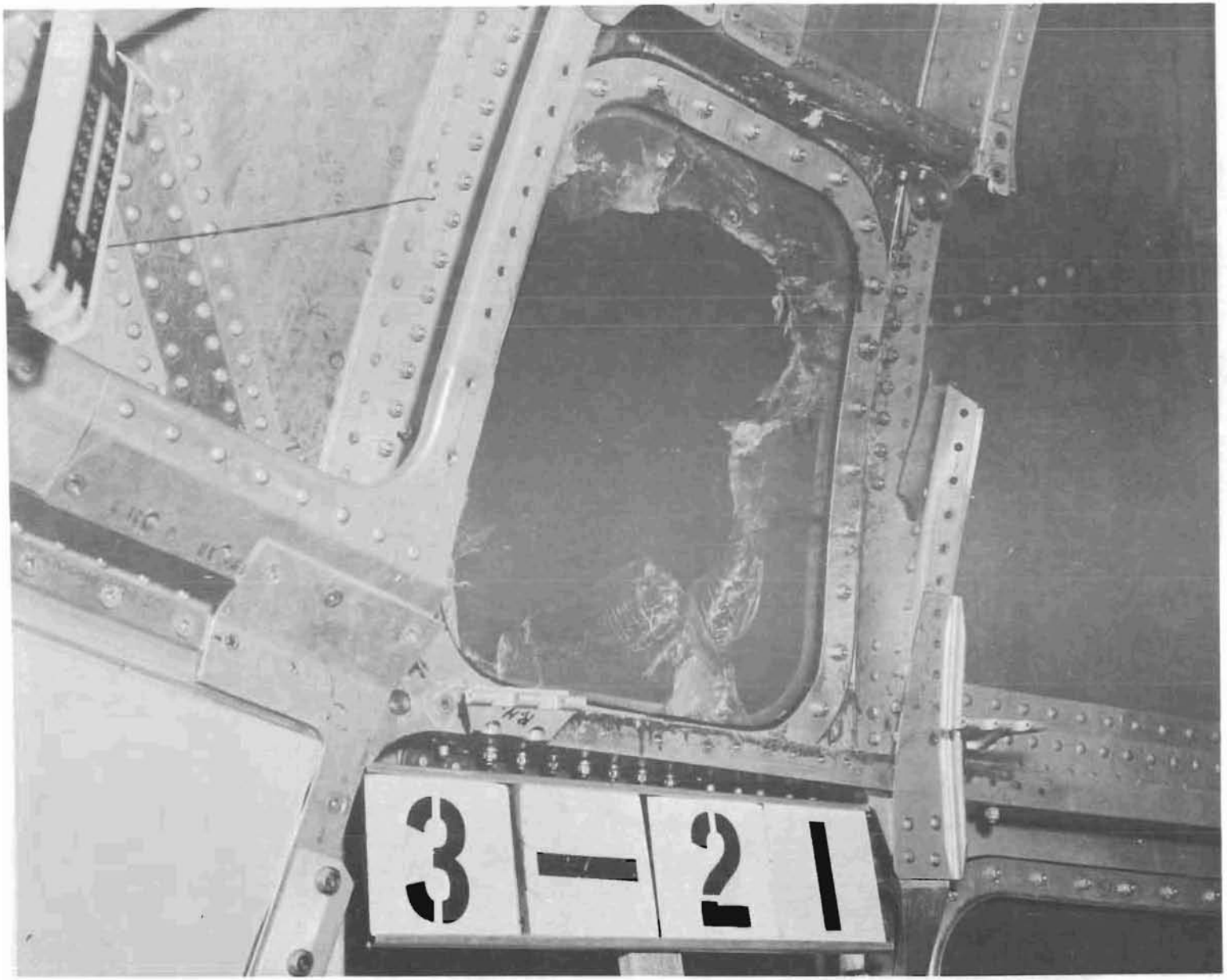

FIG. 12 TEST 3-21 - COPILOT EYEBROW WINDOW, INTERIOR PANEL - PROJECTILE VELOCITY 388 MPH

FIG. 13 TEST 3-21 - COPILOT - PROJECTILE VELOCITY 388 MPH

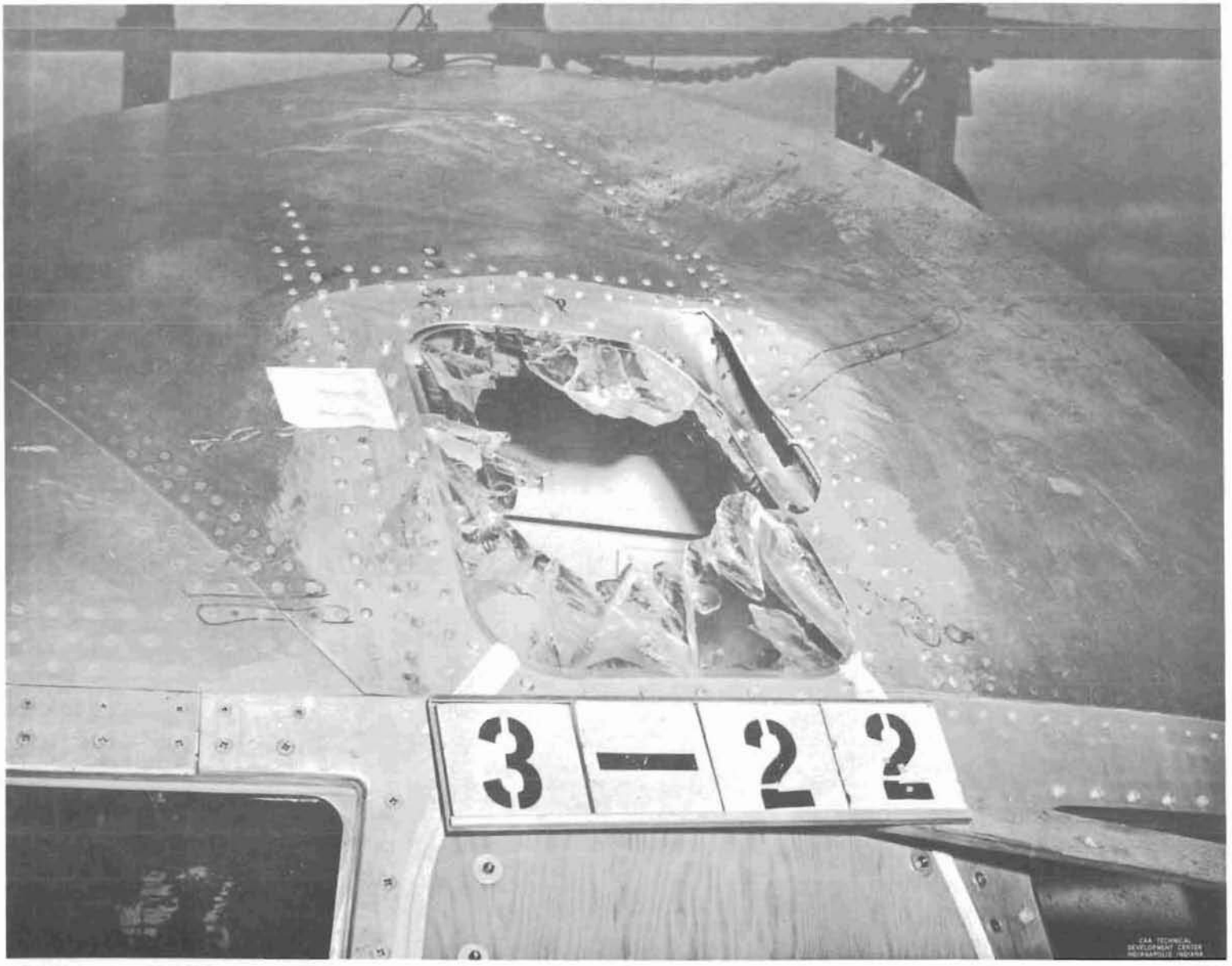

FIG. 14 TEST 3-22 - PILOT EYEBROW WINDOW, EXTERIOR VIEW - PROJECTILE VELOCITY 413 MPH

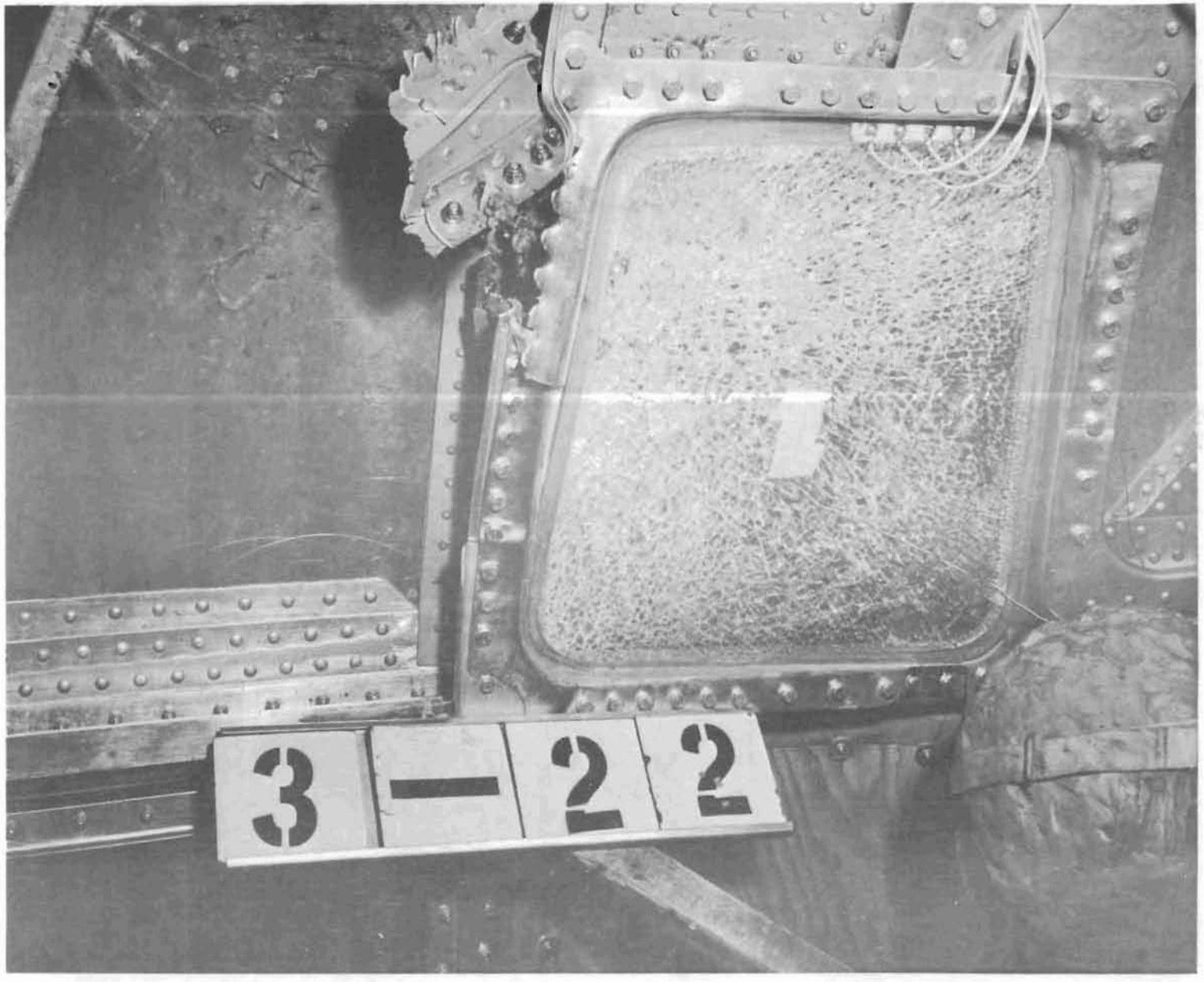

FIG. 15 TEST 3-22 - PILOT EYEBROW WINDOW, INTERIOR VIEW - PROJECTILE VELOCITY 413 MPH

FIG. 16 TEST 3-22 - PILOT EYEBROW WINDOW, INTERIOR VIEW SHOWING DAMAGED FRAME - PROJECTILE VELOCITY 413 MPH

FIG. 17 TEST 3-22 - PILOT - PROJECTILE VELOCITY 413 MPH

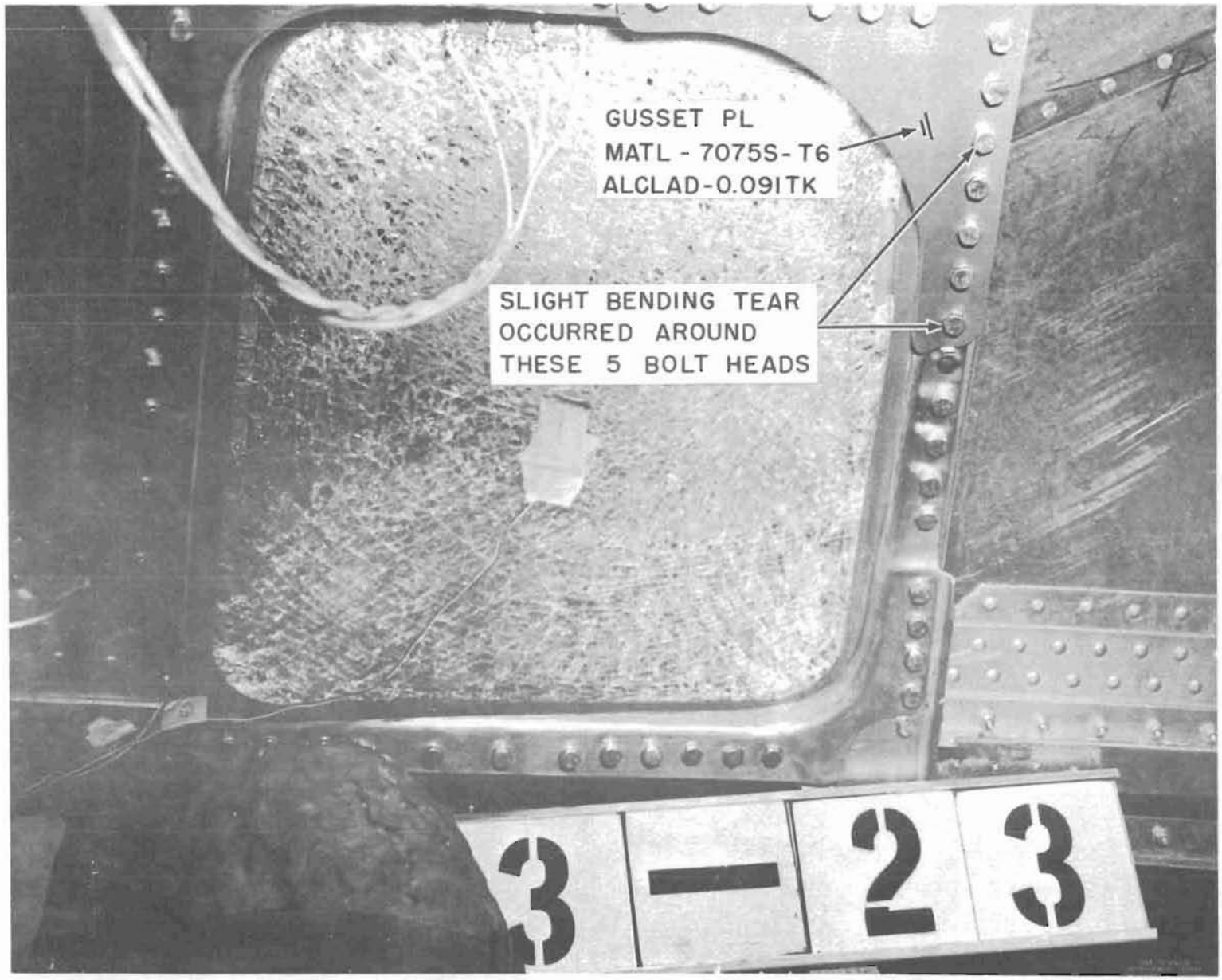

FIG. 18 TEST 3-23 - COPILOT EYEBROW WINDOW INTERIOR VIEW - PROJECTILE VELOCITY 397 MPH

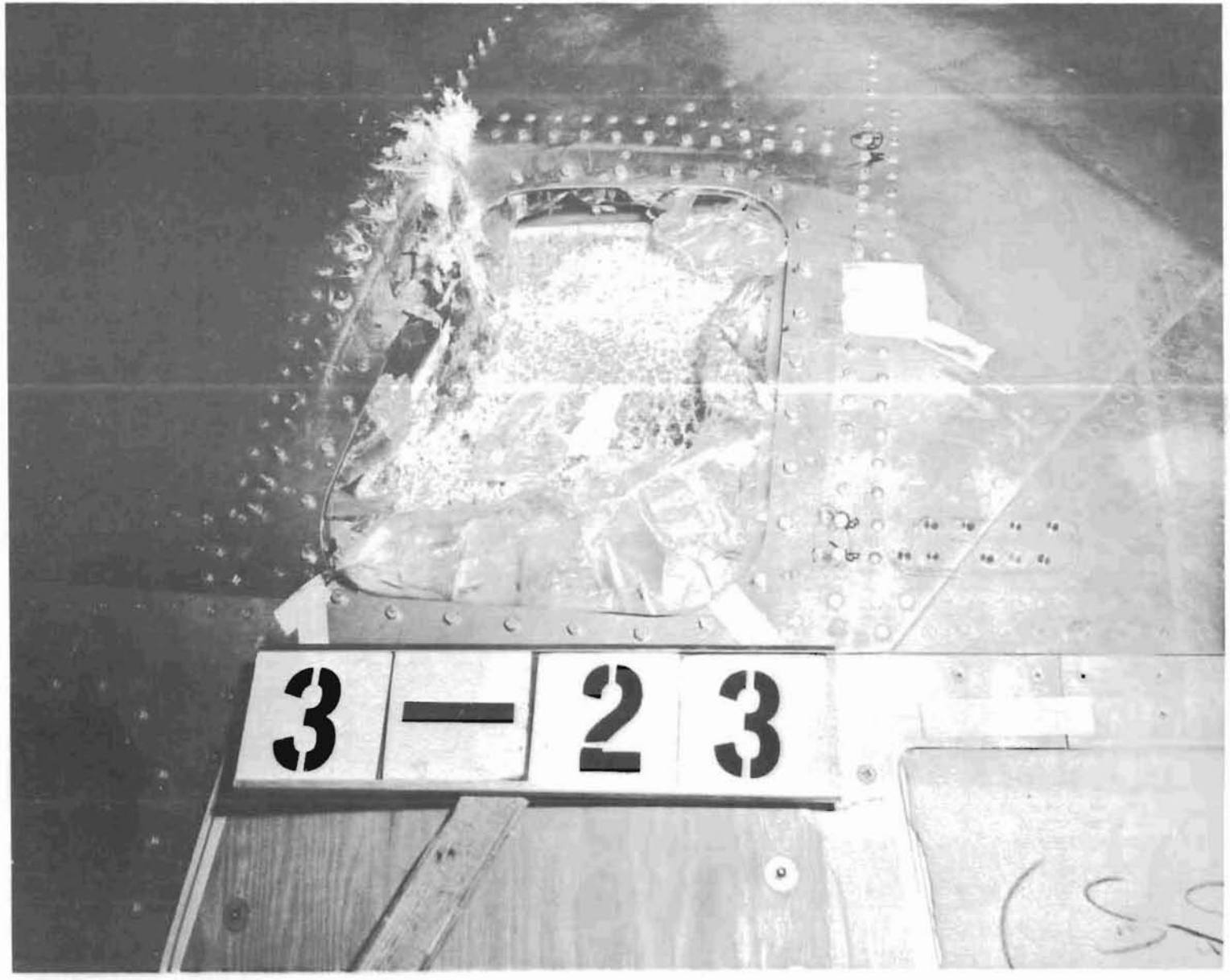

FIG. 19 TEST 3-23 - COPILOT EYEBROW WINDOW, EXTERIOR VIEW - PROJECTILE VELOCITY 397 MPH

FIG. 20 TEST 3-23 - COPILOT - PROJECTILE VELOCITY 397 MPH

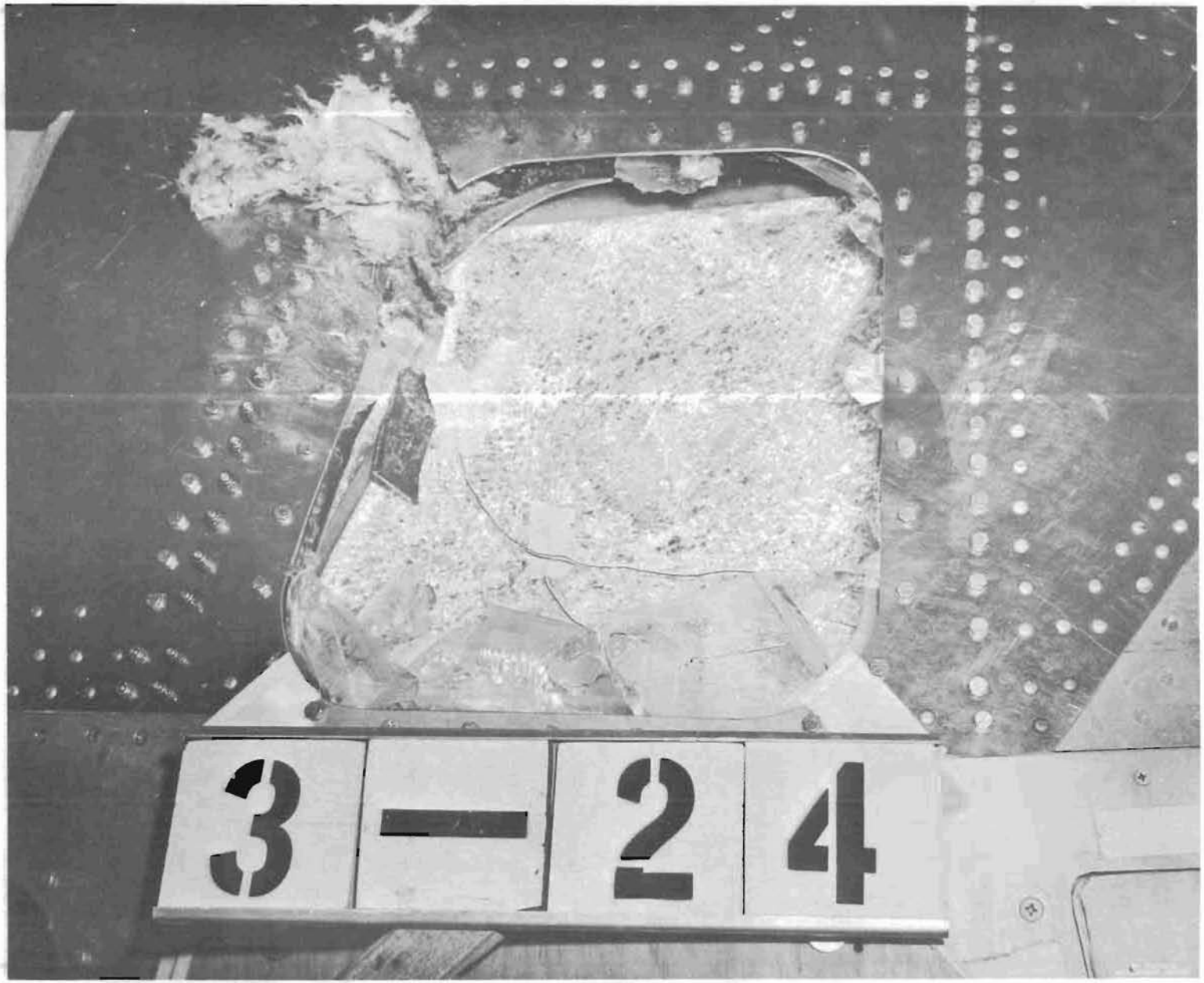

FIG. 21 TEST 3-24 - PILOT EYEBROW WINDOW, EXTERIOR WINDOW - PROJECTILE VELOCITY 432 MPH

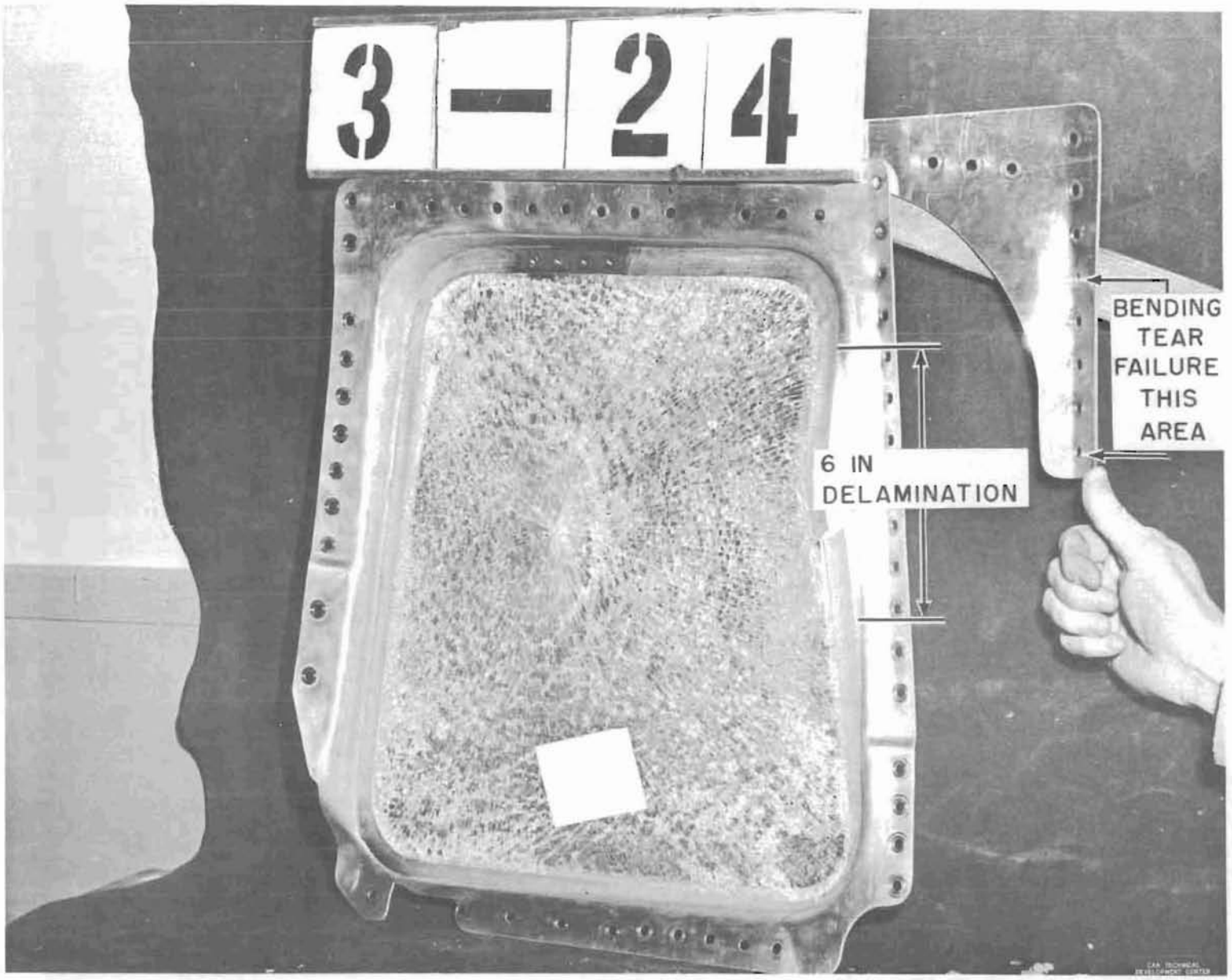

FIG. 22 TEST 3-24 - PILOT EYEBROW WINDOW, INTERIOR PANEL - PROJECTILE VELOCITY 432 MPH

FIG. 23 TEST 3-24 - PILOT - PROJECTILE VELOCITY 432 MPH

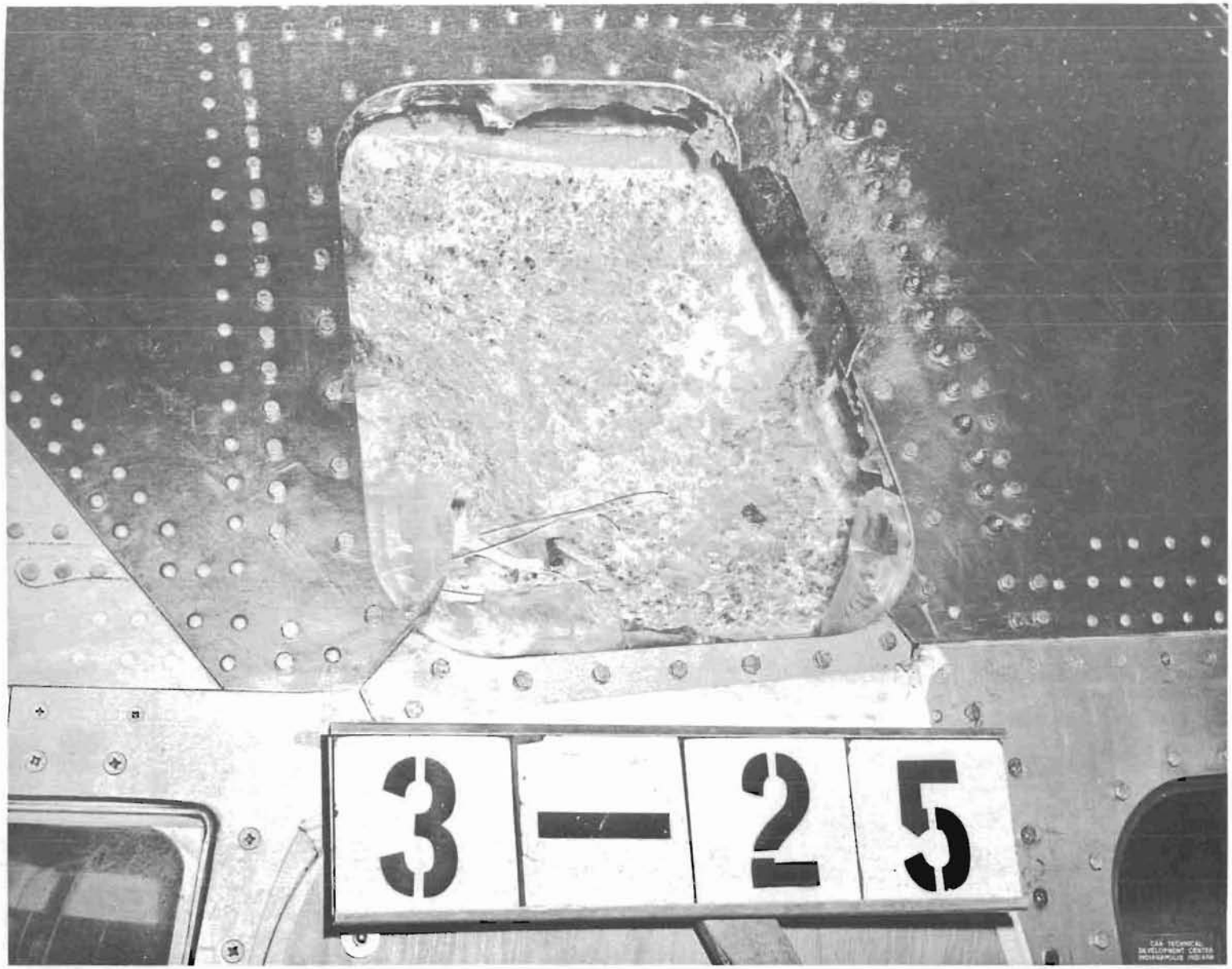

FIG. 24 TEST 3-25 - PILOT EYEBROW WINDOW, EXTERIOR VIEW - PROJECTILE VELOCITY 485 MPH

FIG. 25 TEST 3-25 - PILOT EYEBROW WINDOW, INTERIOR VIEW - PROJECTILE VELOCITY 485 MPH

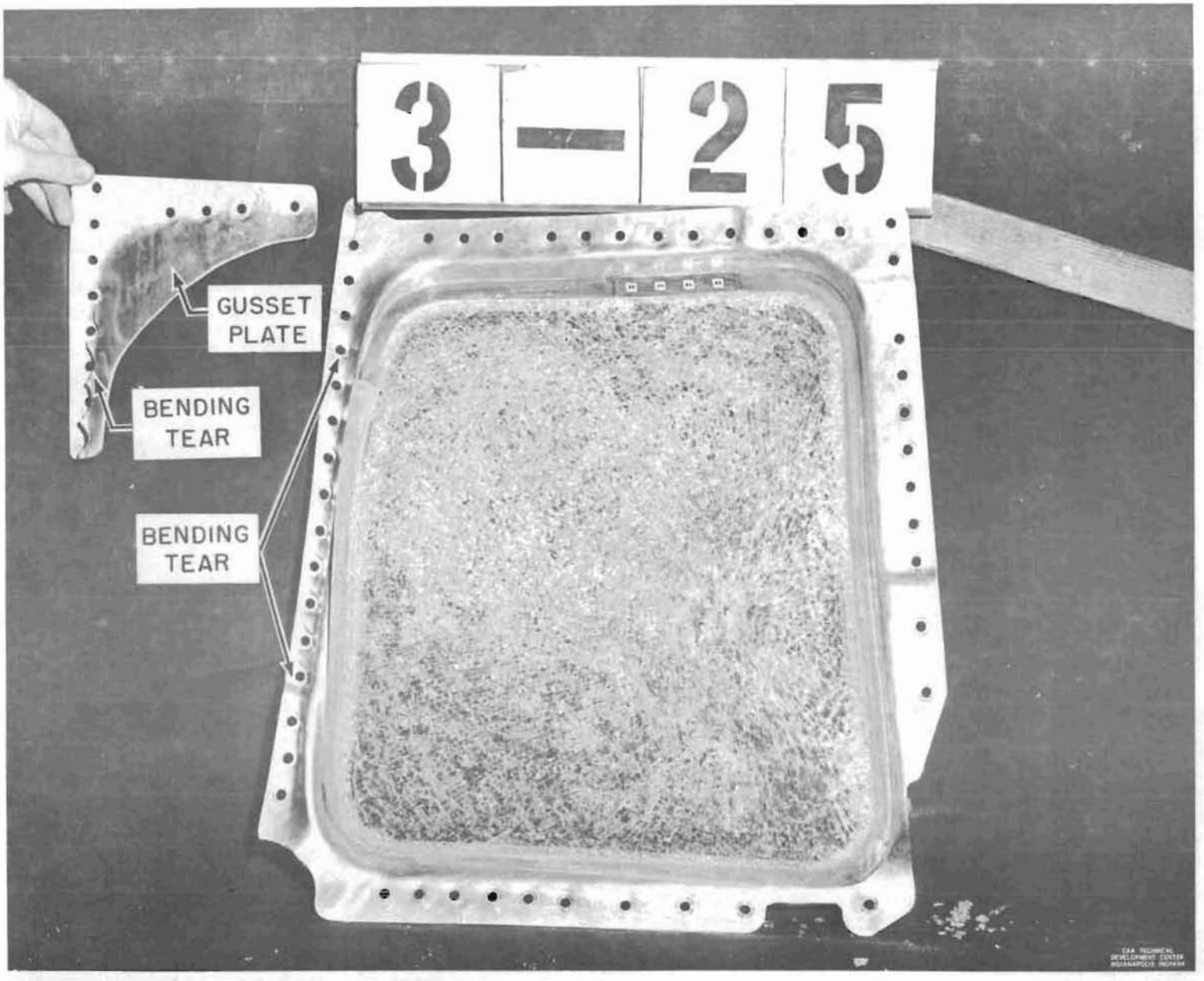

FIG. 26 TEST 3-25 - PILOT EYEBROW WINDOW, INTERIOR PANEL - PROJECTILE VELOCITY 485 MPH

FIG. 26A TEST 3-25 - PILOT - PROJECTILE VELOCITY 485 MPH

FIG. 27 TEST 3-26 - PILOT CLEAR-VIEW WINDOW, EXTERIOR VIEW - PROJECTILE VELOCITY 430 MPH

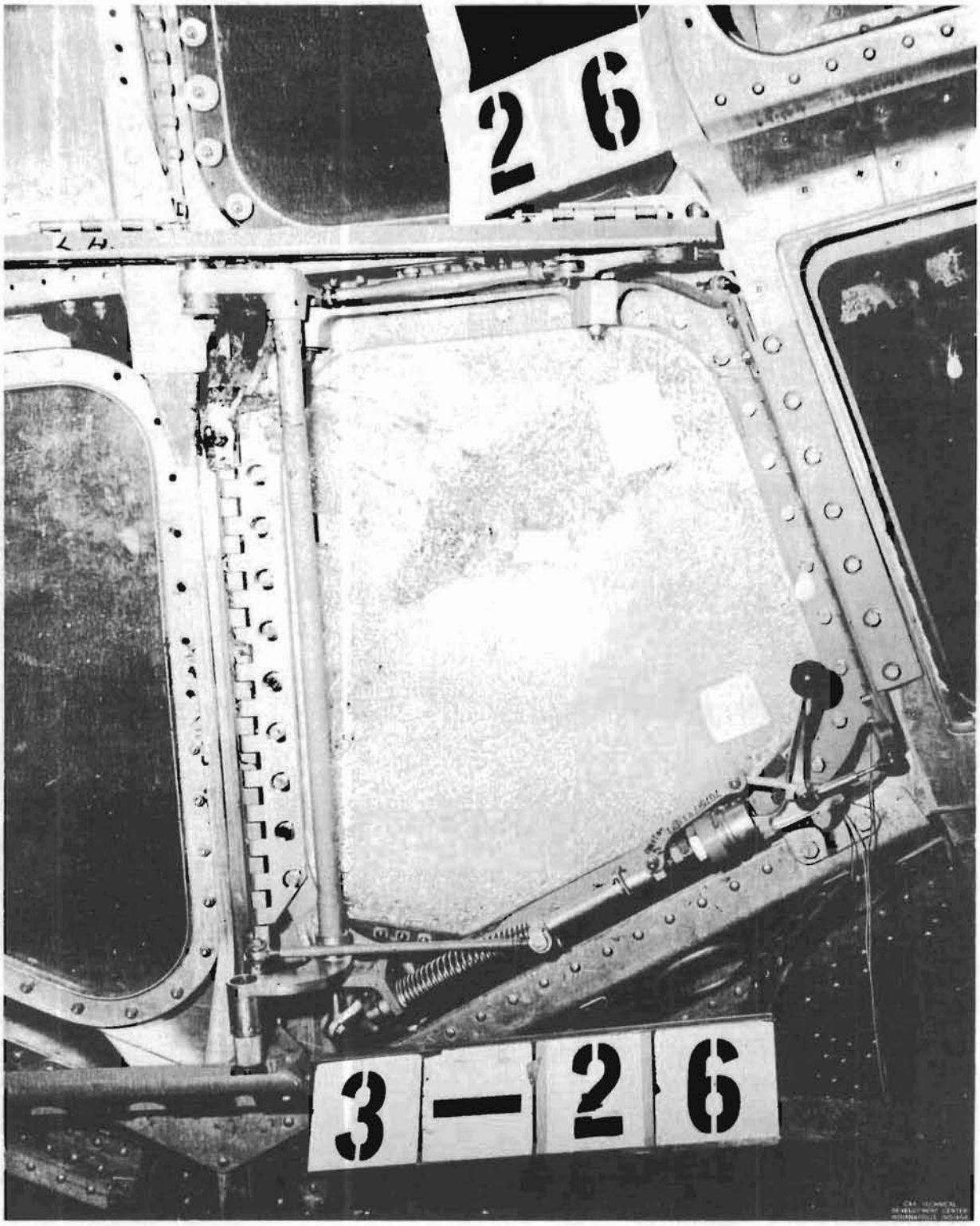

FIG. 28 TEST 3-26 - PILOT CLEAR-VIEW WINDOW, INTERIOR VIEW - PROJECTILE VELOCITY 430 MPH

FIG. 29 TEST 3-26 - PILOT - PROJECTILE VELOCITY 430 MPH

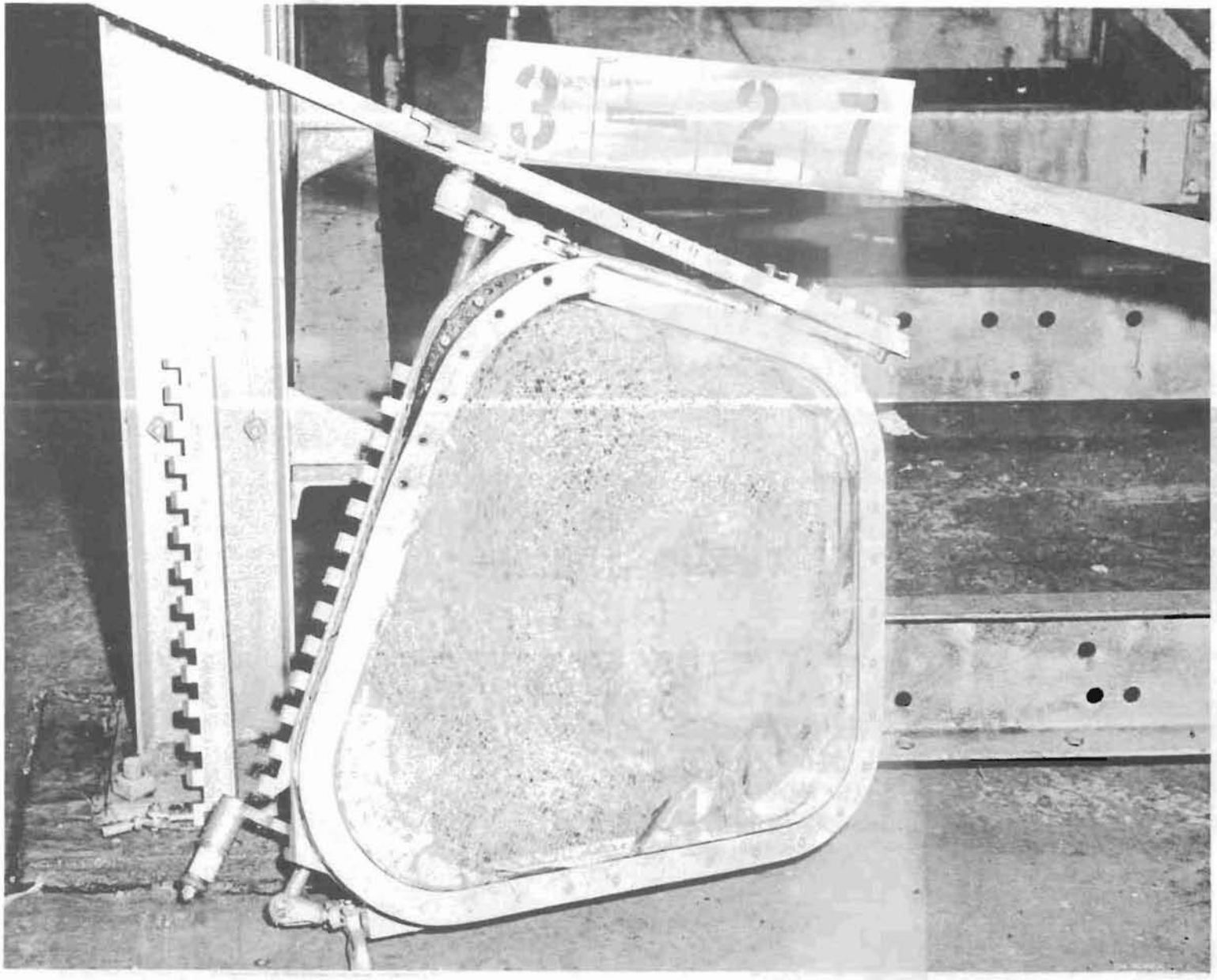

FIG. 30 TEST 3-27 - COPILOT CLEAR-VIEW WINDOW, EXTERIOR PANEL - PROJECTILE VELOCITY 485 MPH

FIG. 31 TEST 3-27 - COPILOT CLEAR-VIEW WINDOW, EXTERIOR VIEW - PROJECTILE VELOCITY 485 MPH

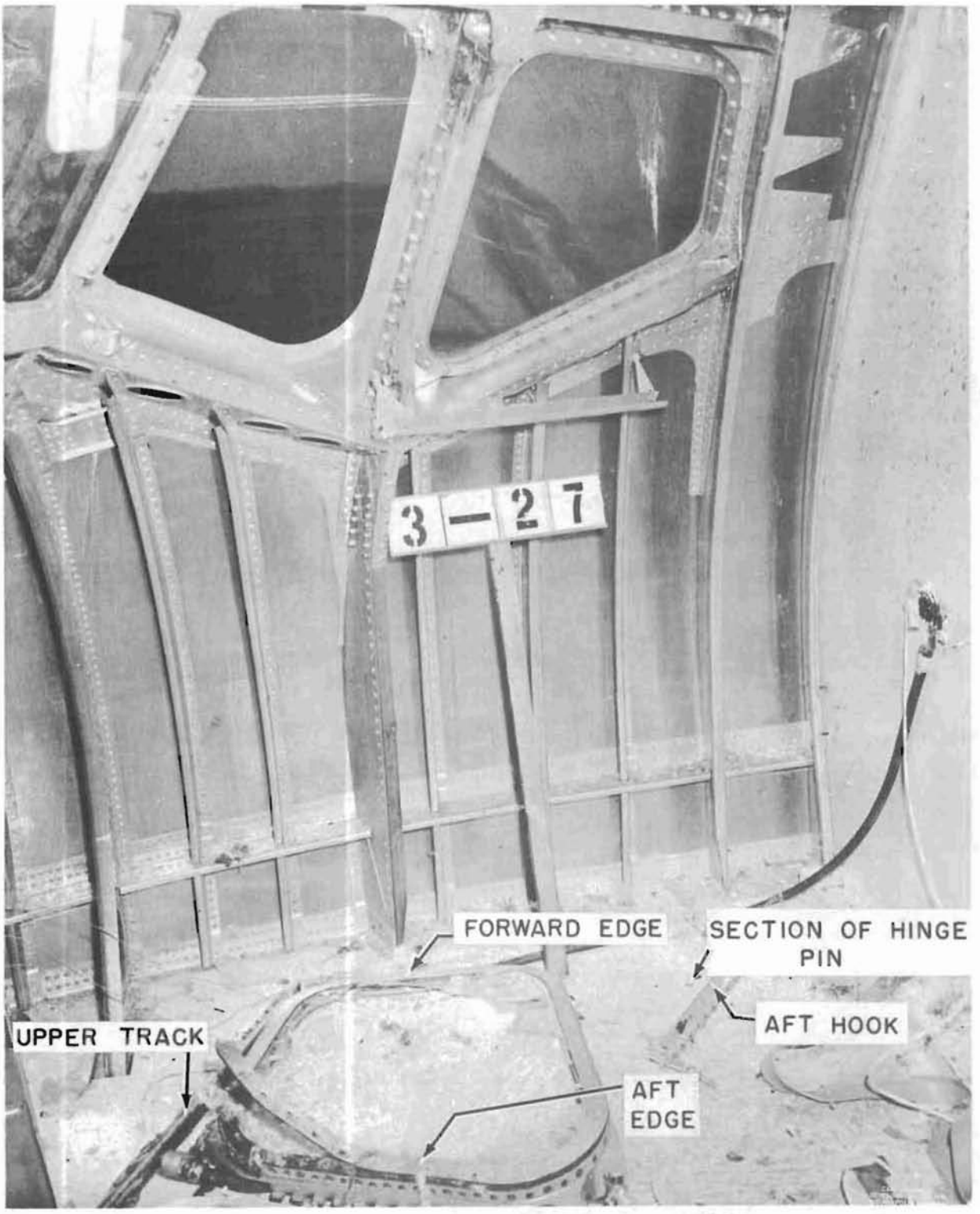

FIG. 32 TEST 3-27 - COPILOT CLEAR-VIEW WINDOW, EXTERIOR VIEW - PROJECTILE VELOCITY 485 MPH

FIG. 33 TEST 3-28 - PILOT CLEAR-VIEW WINDOW, EXTERIOR VIEW - PROJECTILE VELOCITY 481 MPH

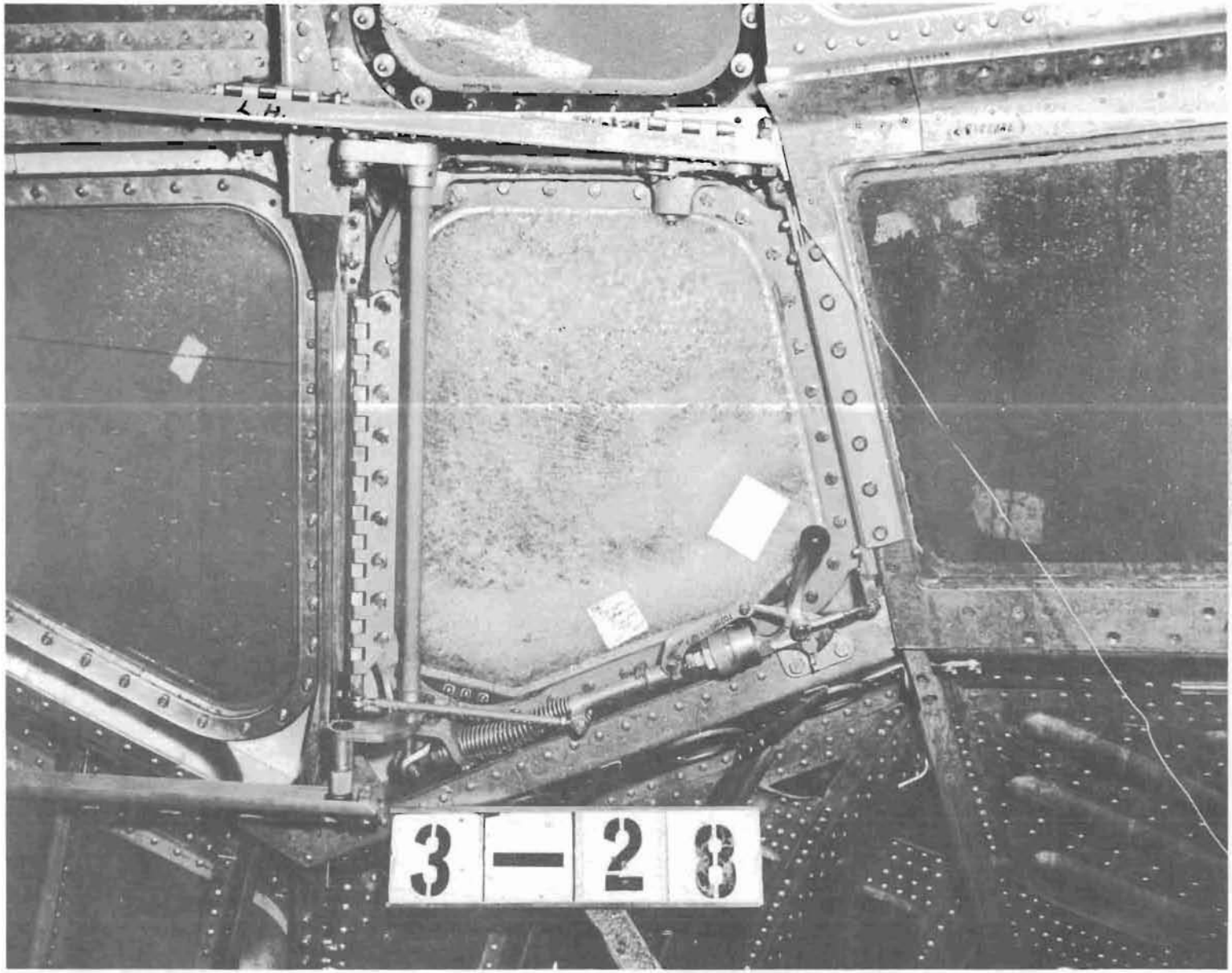

FIG. 34 TEST 3-28 - PILOT CLEAR-VIEW WINDOW, INTERIOR VIEW - PROJECTILE VELOCITY 481 MPH

FIG. 34A TEST 3-28 - PILOT'S SLIDING WINDOW - PROJECTILE VELOCITY 481 MPH

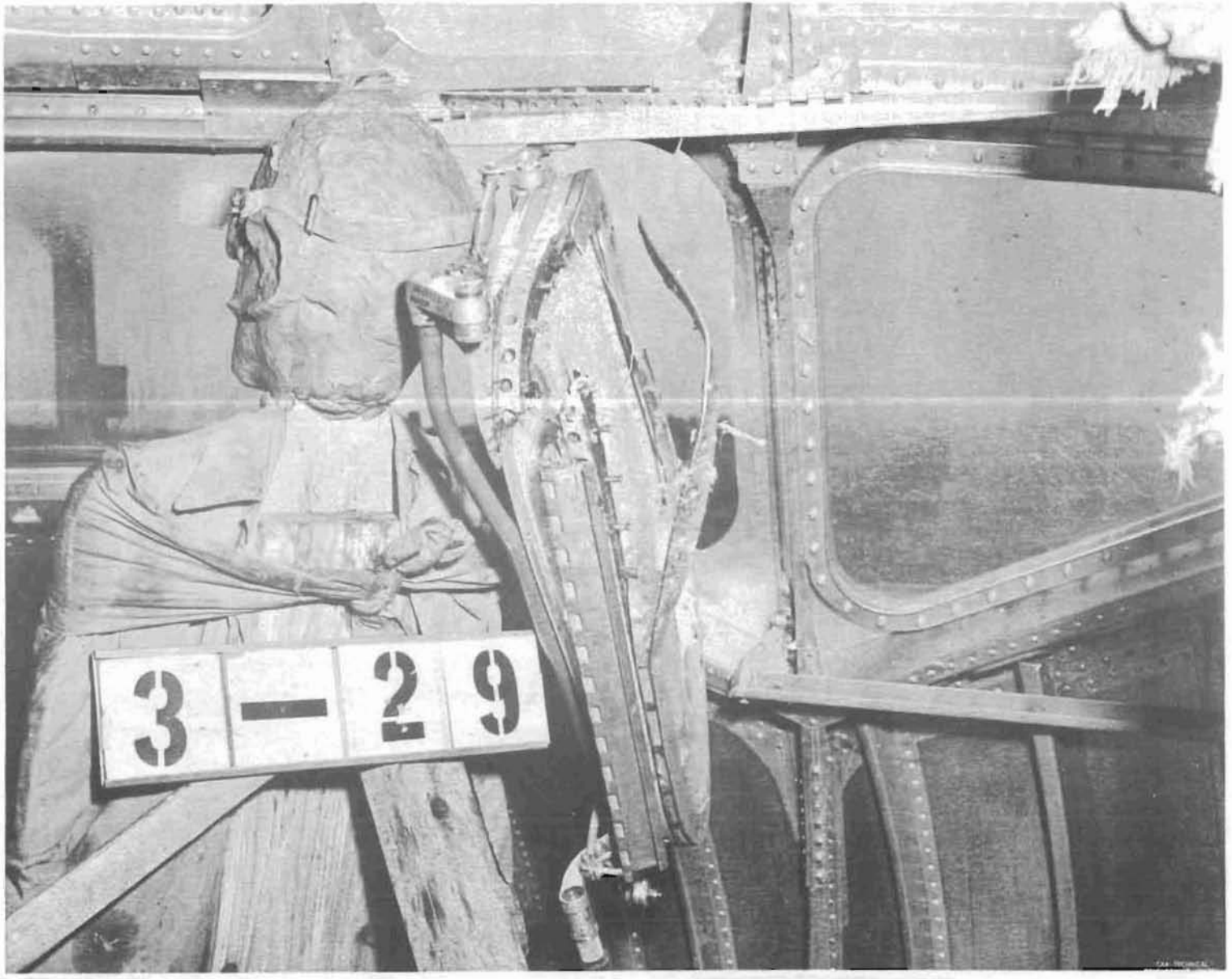

FIG. 35 - TEST 3-29 - COPILOT CLEAR-VIEW WINDOW - PROJECTILE VELOCITY 486 MPH

FIG. 36 TEST 3-29 - COPILOT CLEAR-VIEW WINDOW - EXTERIOR VIEW - PROJECTILE VELOCITY