GRANN

FAA WJH Technical Center
00093102

USING THE GLOBAL POSITION SATELLITE SYSTEM FOR POSITIONING AND NAVIGATION

An Introductory Short Course

FAA WJH Technical Center
Tech Center Library
Atlantic City, NJ 08405

Altair Corporation
P. O. Box 10046
College Station, TX 77840
(713) 696-0429

TL
696
.A17

USING THE GLOBAL POSITION SATELLITE SYSTEM FOR POSITIONING AND NAVIGATION

An Introductory Short Course

presented by

Dr. Tom Rhyne

Dr. Phil Noe

Dr. John Painter

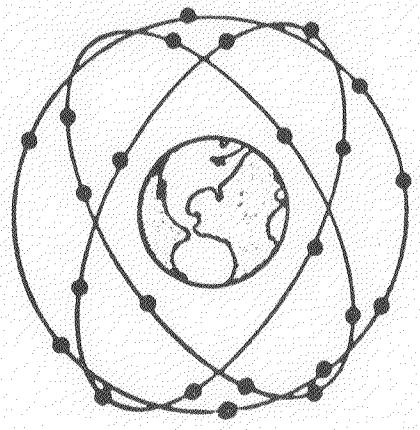

Altair Corporation

P. O. Box 10046

College Station, TX 77840

(713) 696-0429

USING THE GLOBAL POSITION SATELLITE SYSTEM FOR POSITIONING

AND NAVIGATION

An Introductory Short Course Presented by

Dr. Tom Rhyne, Dr. Philip Noe, and Dr. John Painter

Altair Corporation

P. O. Box 10046

College Station, TX 77840

General Course Description:

Intended for engineers and scientists who require an understanding of the basic concepts and capabilities of GPS systems, software, and hardware, this short course concentrates on graphical explanations of the navigation techniques and signalling techniques whereby GPS operates. Necessary mathematics is presented in an intuitive, physical framework conducive to a general understanding of the functions of the user hardware/software. Structured as 12-14 hours of instruction in 2-3 days, the course presumes a grasp of basic computer concepts and some familiarity with navigation concepts.

Detailed Course Desription:

Section One - An Introduction to GPS [RHYNE]:

- An overview of GPS
- Making a Pseudorange Measurement
- Estimating the User's Position
- Understanding the GPS Signal and Data Structure
- A Typical Receiver Architecture
- Survey of Existing GPS Equipment: What is it and Who makes it?

Section Two - Navigation [NOE]:

- Navigating by Satellite Pseudoranges
- Satellite Constellations and their Selection
- Satellite Trajectory Theory
- The Navigation Problem with 1, 2, 3,and more Satellites
- Single vs. Multiple Receiver Channels
- Error Sources in The GPS Calculations
- Computational Requirements and Hazards
- Microcomputer Software Development for GPS Navigation

Section Three - Signal Processing [PAINTER]:

- GPS Signal Structure
- Range Measurement via Correlation Processing
- The Costas Loop as a Data Detector
- Coherent/Incoherent Ranging Techniques
- Design Example and Sources of Error
- The Kalman FIlter: Standard, Extended, and Adaptive

Course Staff:

Drs. Noe, Painter, and Rhyne have been involved in GPS research and development since 1975. They have served as consultants and lecturers for GPS and similar ranging/navigation systems, with a wide variety of industrial and government agencies. They have been funded by NASA, USAF, and U.S. Coast Guard for GPS system and avionic design studies. They have served as members of the Shuttle GPS Panel since its inception. Collectively, they have presented ten conference papers on GPS and they and their associates have written over twelve key GPS research reports and papers. Dr. Noe was an invited participant at a recent FAA/NASA Conference on Low-Cost GPS for General Aviation. Drs. Painter and Rhyne are former NASA engineers. All three all either rated aircraft navigators or pilots, or both.

Course Notes for

USING THE GLOBAL POSITION SATELLITE SYSTEM FOR POSITIONING AND NAVIGATION

Copyright by Authors 1980

Session IA: Introductory Concepts

Visual Aid IA-1

An Introduction

to

NAVSTAR/GPS

Visual Aid IA-2

What does GPS do?

Provides properly equipped users with three-dimensional position and velocity, and time, anywhere on or near the Earth, at any time...

Visual Aid IA-3

How does GPS work?

Orbiting satellites (SVs) emit radio signals from which users can estimate the elapsed time of signal passage from the SVs to the user position, the relative velocity between the SVs and the user, and obtain data to calculate the position and velocity of each SV at any time...

Visual Aid IA-4

User velocity information can also be determined.

From this information, the user can estimate range from his position to one or more known points...

this allows an estimate of the user position to be calculated!

Visual Aid IA-5

A range measurement establishes a spherical surface of position. Multiple range measurements are needed to define a specific point as the user position.

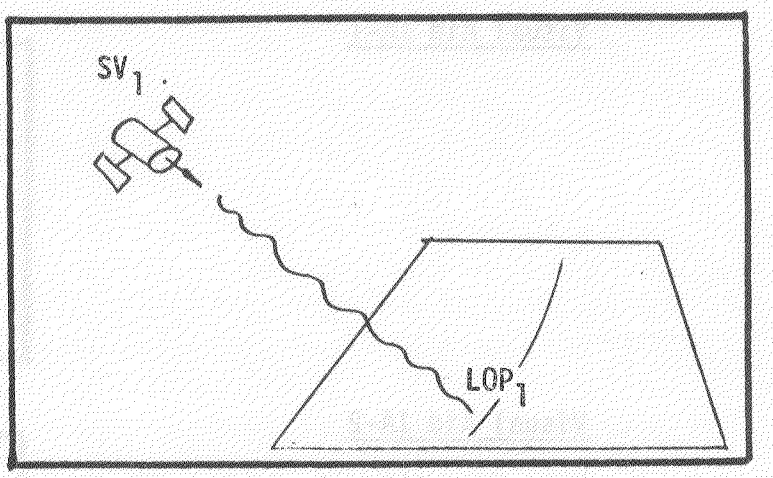

Visual Aid IA-6

A simple two-dimensional example.

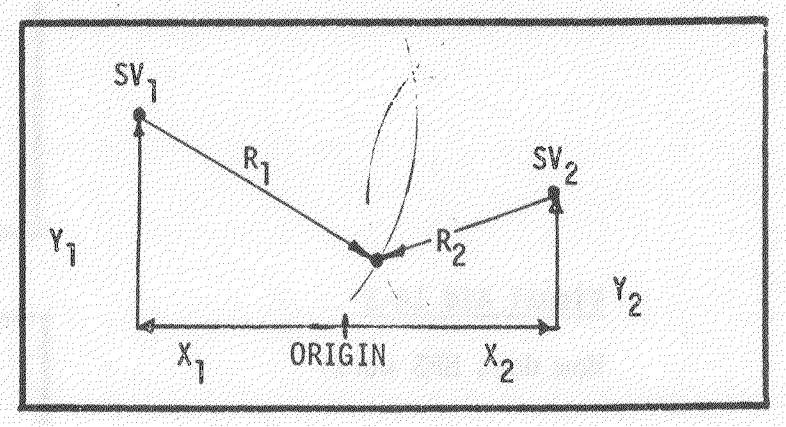

Visual Aid IA-7

Errors arise during the range measurement, however.

Sources of ERROR

*SV Position Calculations	(1.5m)
*SV Timing	(1.0m)
*Noise	(1.0m)
*Propagation Velocity Shifts	(4.0m)
*Measurement Errors	(?)
*Multipath	(1.0m)
*Calculational Errors	(?)

Visual Aid IA-8

Phase II until 1985. Phase III by 1985 or later.

The complete GPS SV configuration will have 24 SVs; 8 each in three orbital planes.

Initial configuration will have from 4 to 6 SVs.

Visual Aid IA-9

The Phase III user will always have 6 or more SVs "in view"

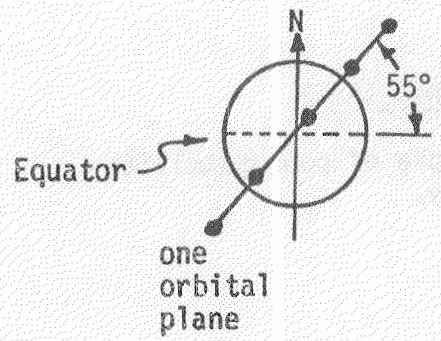

Visual IA-10

SVs are in near-circular 12-hour orbits at an altitude of about 20 million meters.

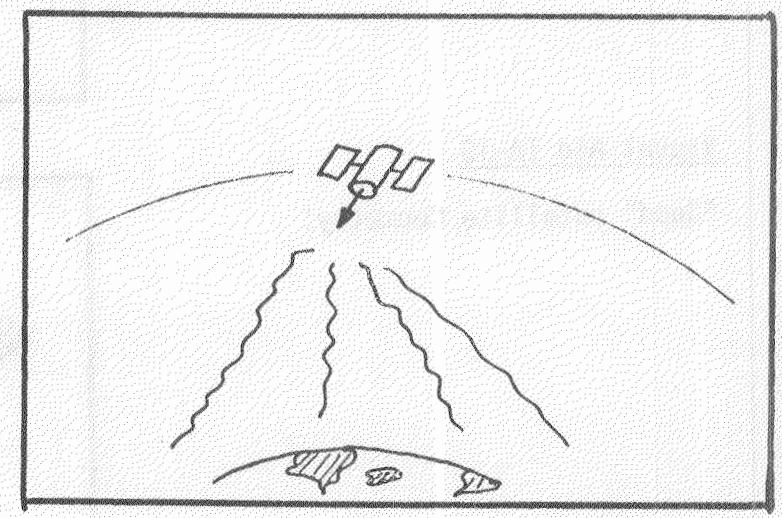

Visual Aid IA-11

The User Equipment must select a set of satellites from those currently in view, make a coordinated set of range measurements, and then calculate the user position.

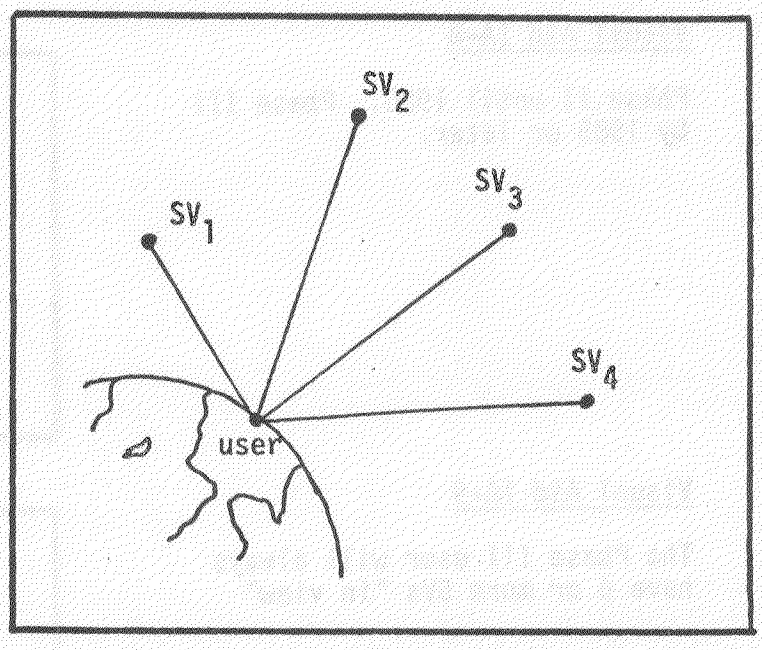

Visual Aid IA-12

An example of poor satellite geometry.

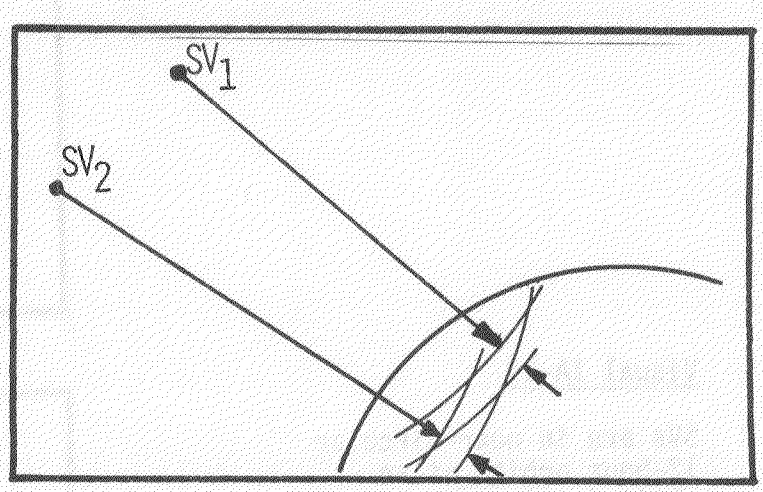

Visual Aid IA-13

"Good" satellite Geometry!

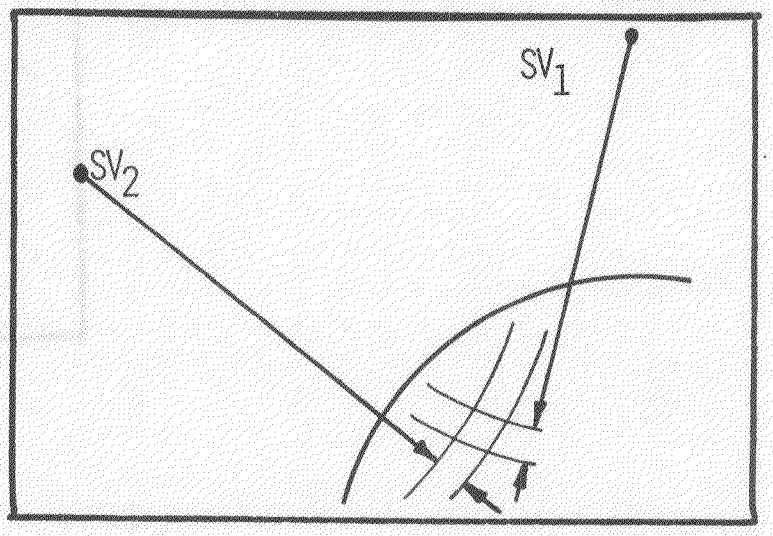

Visual Aid IA-14

The CS is headquartered at Vandenburg AFB, CA.

The SVS is handled through Rockwell and Aerospace.

User Equipment is available from a variety of sources.

GPS System consists of three related "segments":

* The CONTROL Segment (CS)
* The SPACE VEHICLE Segment (SVS)
* The USER Segment (US)

Visual Aid IA-15

SVs broadcast complex radio signals on two different frequency bands, both derived from the SV clock, 10.23 Mhz.

L_1 = 1575.42 MHz

L_2 = 1227.60 MHz.

Visual Aid-16

The SVs emit digitally encoded PSK signals, allowing the user to estimate the signal transit time from the SV to his position.

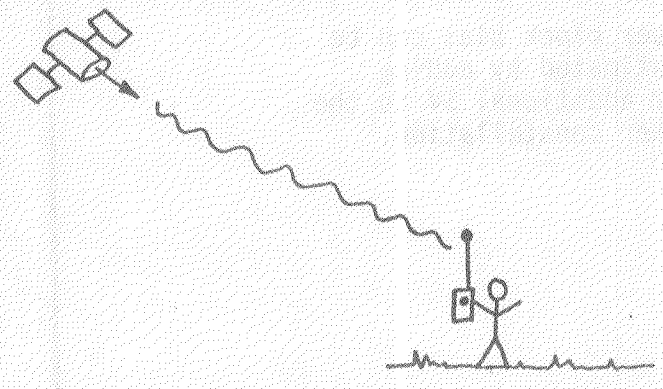

Visual Aid IA-17

The system involves three different time references.

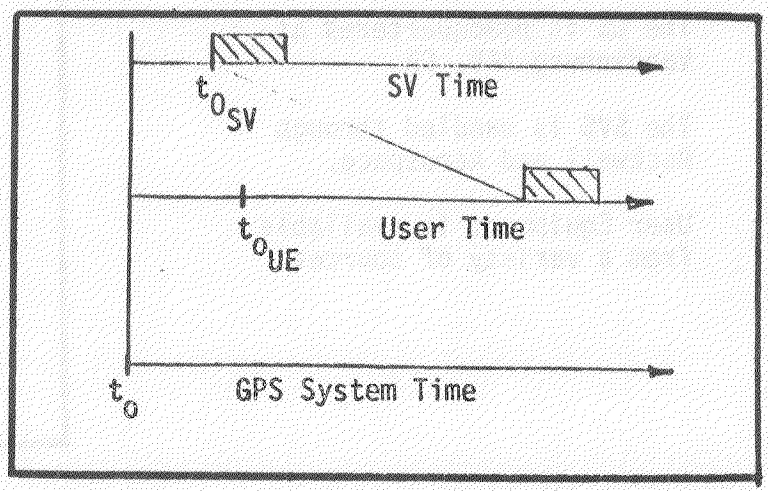

Visual Aid IA-18

SV time offset to GPS time can be adjusted by the CS. The SVs also send down data to allow the user to calculate any remaining offset!

$$\Delta t_{SV} = a_o + a_1(t-t_{oc}) + a_2(t-t_{oc})^2$$

Visual Aid IA-19

User clock bias can be estimated by adding an additional SV to the User constellation.

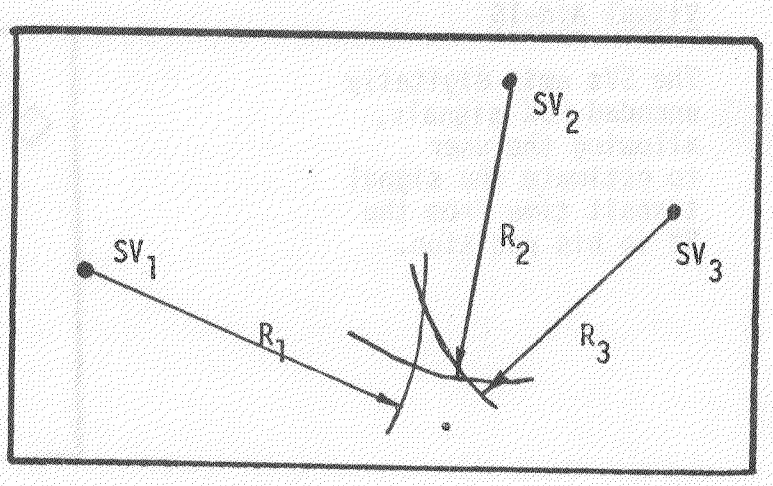

Visual Aid AI-20

The GPS SVs emit a very complex sequence of digital values.

Direct-Sequence Spread Spectrum Encoding:

*Multiple Use of Spectrum
*Continuous Ranging

Visual Aid IA-21

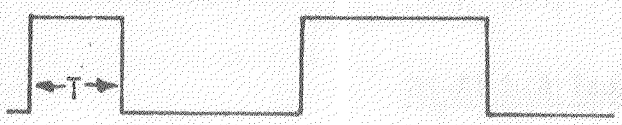

Visual Aid IA-22

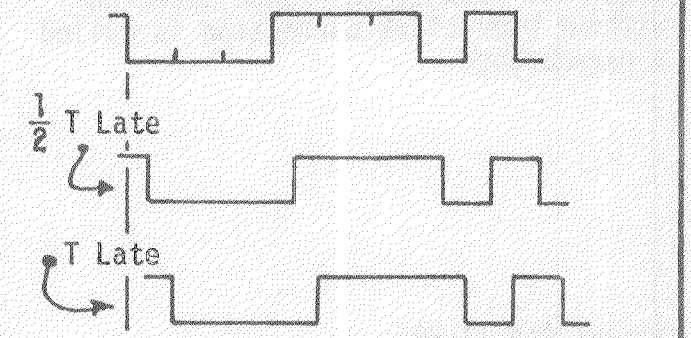

Visual Aid IA-23

The peak is normalized as unity.

m = The length of sequence.

T = length of one bit-time of code.

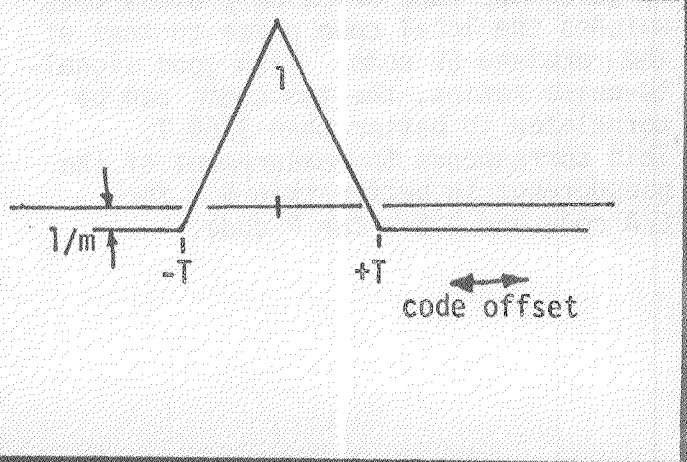

Visual Aid IA-24

The receiver must generate a replica of the SV coding sequence. This "local" code is then shifted against the User time base until correlation between the local code and the code received from the SV is detected.

Correlation can be detected whenever the local code phase is within ± T seconds of the phase of the code as received from the SV.

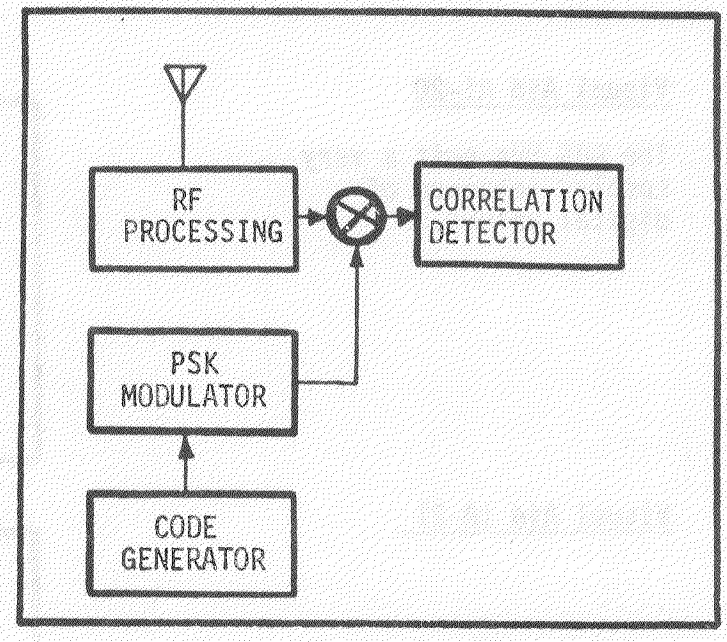

Visual Aid IA-25

The time shift required to bring the local code into correlation with the SV signal is used to calculate the range to the SV. SV clock offset is calculated out by using the data from the SV. User clock offset cannot be removed from the measurement until additional SVs are acquired. Hence, the range measured without User clock correction is called a *pseudo*range.

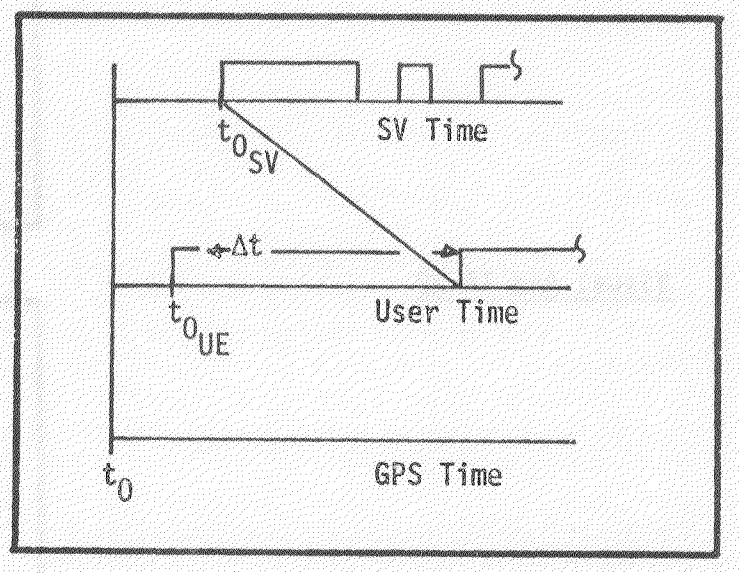

Visual Aid IA-26

The correlation detector can be used to guide the code-shifting process that matches the local code phase to that of the received SV code. With good signal-to-noise ratios, the two codes can be correlated to better than 1/64 T. This corresponds to measurement of the pseudorange to better than 5 m for C/A code and 0.5 m for P code.

*Pseudo*range is calculated as:

$$R = c \times \Delta t \pm \Delta t_{SV}$$

True range is:

$$R \pm b = R \pm (\Delta t_{UE} \times c)$$

Session IB: Receiver Design Overview

Visual Aid IB-1

The major function of the receiving section of a piece of GPS User Equipment is the measurement of Pseudorange.

Changes in the range between the User and the SV force the phase of the local code relative to User time to be changed in order to maintain correlation between these two codes.

Maintaining these two codes in correlation is called *code tracking!*

Visual Aid IB-2

Once the SV signal has been acquired, the receiver can maintain lock (tracking) or can move on to acquire another SV and make a new pseudorange measurement.

Tracking is generally required to bring down SV data. A GPS receiver which "tracks" must have more than one receiver channel.

TRACKING RECEIVERS

* Tau Dither
* Delay Locked

Visual Aid IB-3

Early/Late code correlation measurements can be used to keep the local code locked to the code received from the SV.

Frequency lock can be maintained by using a phase-locked loop or a frequency discriminator so long as an acceptable degree of code locking is present.

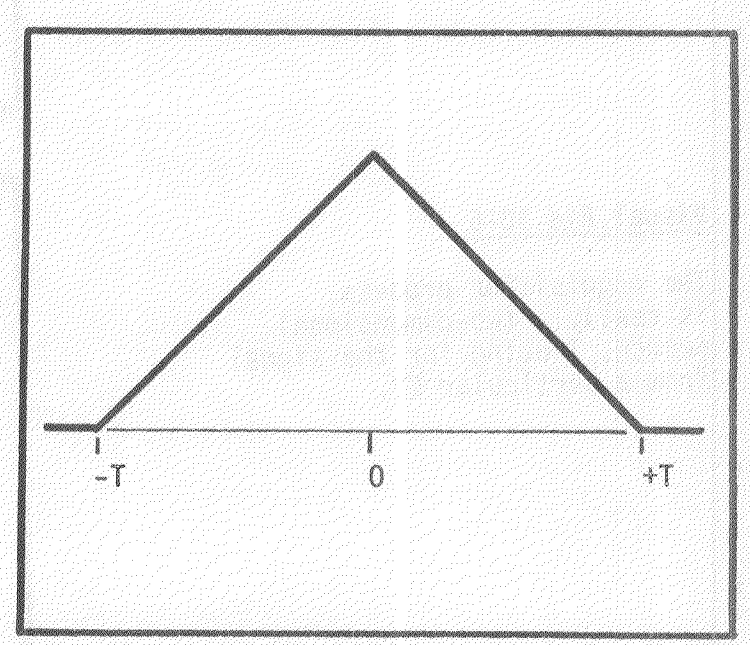

Visual Aid IB-4

Changing range is the result of relative velocity between the user and the SV. The receiver must adapt itself both to changing code phase (range shifts) *and* to changing signal frequency (variation in relative velocity).

Changes in User-to-SV range due to User or SV motion affect the measurement of pseudorange in two ways:

1. Doppler frequency shift
2. $\Delta R/\Delta t$

Visual Aid IB-5

The receiver must be modified to allow adjustment to the Doppler shift. This is called *frequency tracking*.

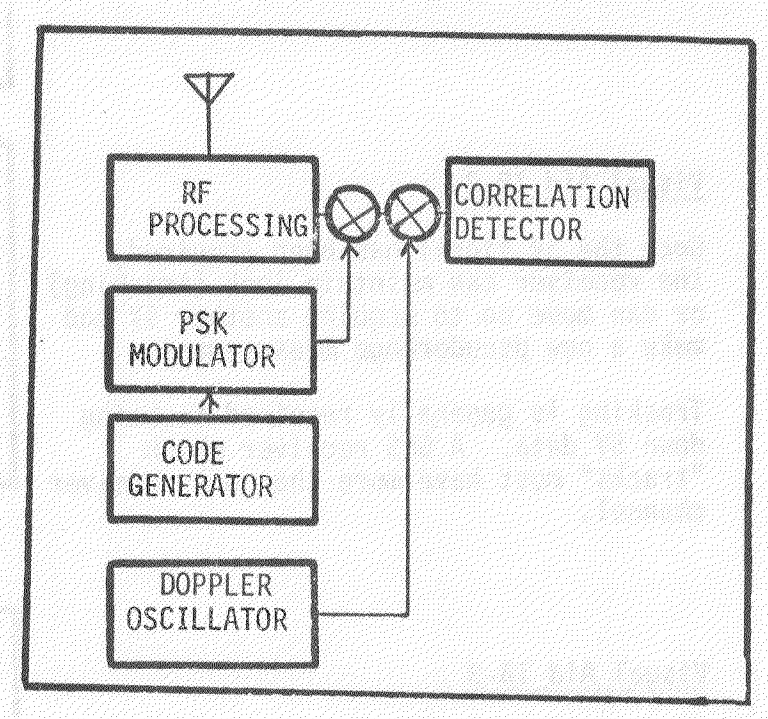

Visual Aid IB-6

The acquisition process is really a two-dimensional search, looking for the signal from a particular SV.

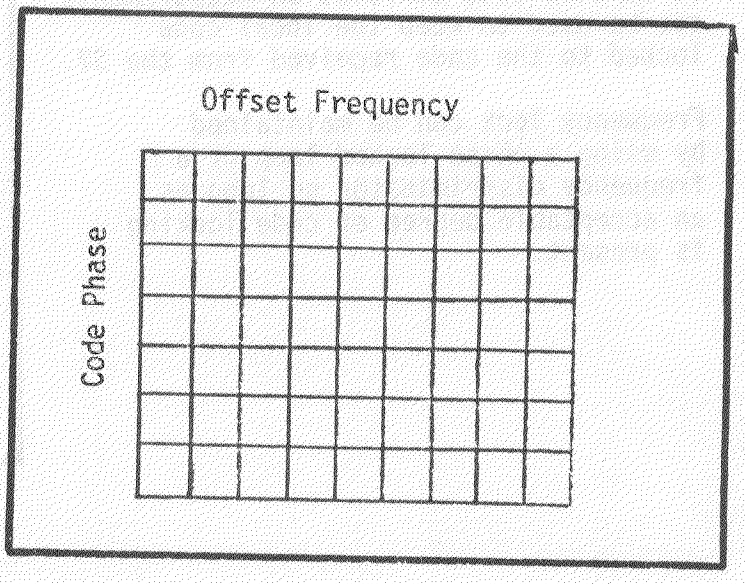

FAA WJH Technical Center
00093102

Visual Aid IB-7

What is a typical acquisition "strategy" within a GPS receiver?

To "acquire" a SV and make a pseudorange measurement:

1. Estimate range and relative velocity to SV.

2. Pre-position the code generator and Doppler offset oscillator based on these estimates.

3. Wait for correlation detector to settle.

4. Declare "lock" if correlation signal is acceptably large.

5. If not, shift code phase or offset frequency and wait again.

Visual Aid IB-8

The predicted *Time to Acquire* is affected by many factors.

* Detector Bandwidth
* Code "Step" Size
* Probability of False Lock
* Probability of Missed Lock
* Accuracy of Pre-position Estimates
* Slewing rates of Code Generator and Doppler Offset Oscillator
* Many more factors...

Visual Aid IB-9

"Aiding" information can come from an altimeter, a heading sensor, an inertial unit, etc.

Some receivers use such information in place of one or more satellites in the position/time calculations.

Since SV motion is well behaved, the receiver can predict changes in range and range-rate due to satellite dynamics and add that information into the code and frequency loops.

Sudden changes in *User* motion can cause the receiver to lose code or frequency lock, however.

"Aiding" the code and frequency loops can help to prevent this loss of lock.

Visual Aid IB-10

In some receivers, the code and frequency loops are linked.

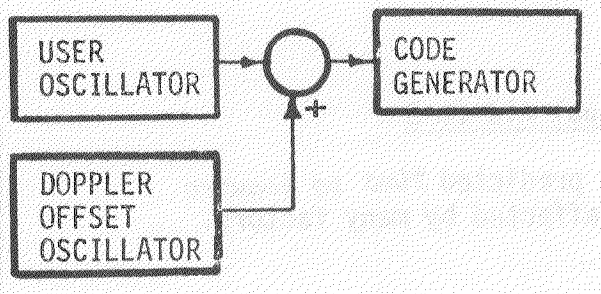

Visual Aid IB-11

The GPS SVs emit two different digital code sequences for use by Users in making range measurements.

One chip of the C/A code corresponds to about 293 m of range. One P code chip corresponds to about 29 m.

C/A: 1.023×10^6 cps
1023 chips long
1 ms epochs

P: 10.23×10^6 cps
2.36×10^{14} chips long
266+ days between epochs

Visual Aid IB-12

The short length of the C/A code makes it easier for a User with uncertain time or position to acquire a SV. It also leads to a range uncertainty of ±293,000 m.

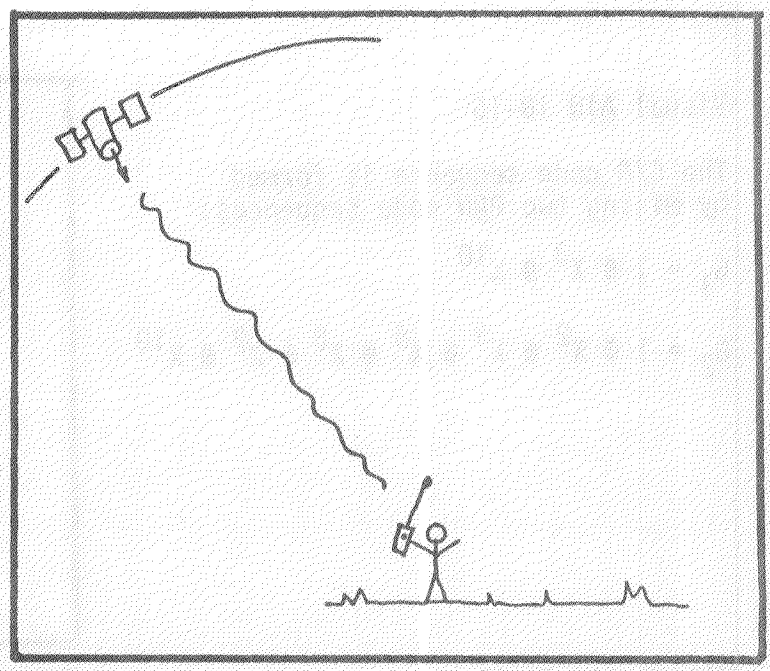

Visual Aid IB-13

The 1.023 chipping rate of the C/A code spreads its signal energy over a ±1.023 MHz band centered about the L_1 frequency.

The P code spreads the L_1 and L_2 signals over bands that are ±10.23 MHz wide.

Thus, a C/A receiver needs about 2 MHz of input bandwidth, and a P receiver needs a BW of about 20 MHz.

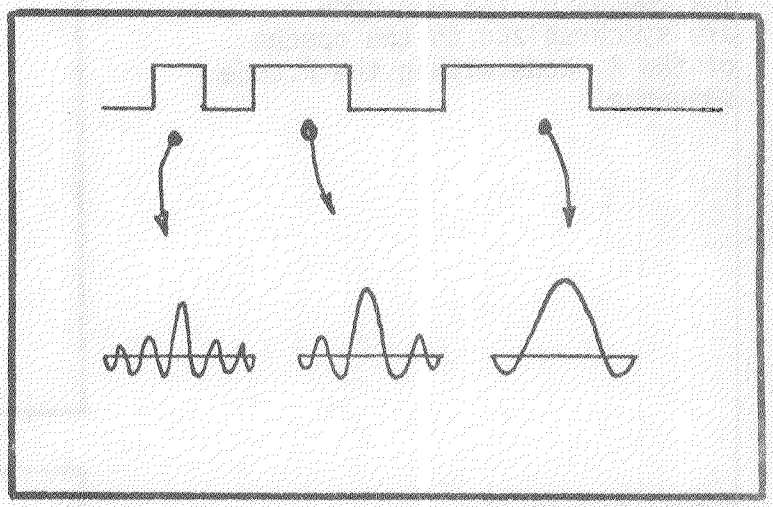

Visual Aid IB-14

The C/A receiver must search only 2046 *range* "bins" coupled with the necessary frequency search region.

A GPS receiver can acquire the C/A code even with great uncertainty as to User time or position. C/A acquisition can then be used to support the acquisition of the P code from that same SV.

Visual Aid IB-15

The C/A code sequence is formed by mixing two PRN code sequences:

$G_1 = 1 \oplus X^3 \oplus X^{10}$

$G_2 = 1 \oplus X^2 \oplus X^3 \oplus X^6 \oplus X^8 \oplus X^9 \oplus X^{10}$

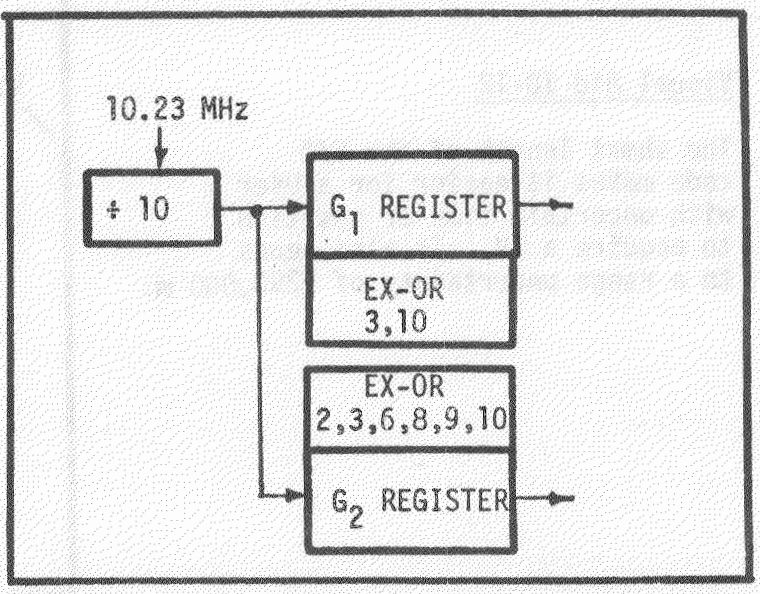

Visual Aid IB-16

The epochs of the C/A code are synchronized to the epochs of the X_1 code within the P code sequence.

The lengthy P code is formed from the mixing of two PRN codes:

X_1 -- 15,345,000 chips long

X_2 -- 15,345,037 chips long

The composite code is

2.3546959×10^{14}

chips long!

Visual Aid IB-17

GPS time restarts at zero every Saturday night at midnight.

X_1 epochs occur every 1.5 seconds.

$$\frac{15{,}345{,}000 \text{ chips/epoch}}{10.23 \times 10^6 \text{ chips/sec}} = 1.5 \text{ sec}$$

The first X_1 epoch (No. *Zero*) occurs at 00:00 on Saturday.

The last X_1 epoch (No. 403,199) occurs at 23:59:58.5 at the end of that week.

Visual Aid IB-18

Each 1.5 sec epoch of the X_1 code spans 1500 repetitions of the C/A code and 15,345,000 chips of the P code sequence.

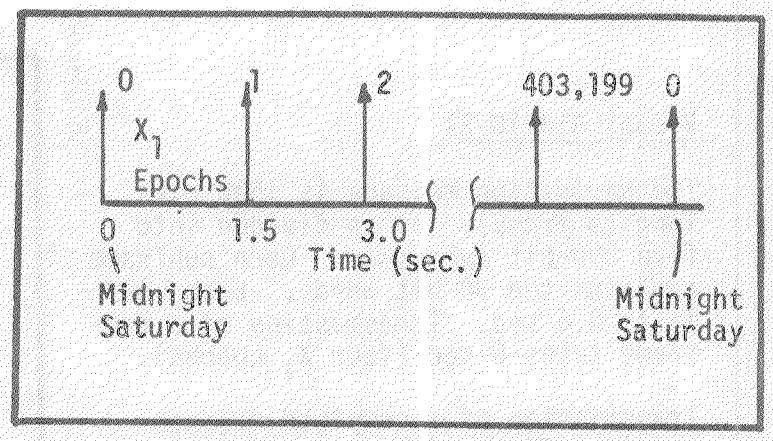

Visual Aid IB-19

Data are superimposed on the C/A and P code strings at a 50 bps rate, with the bit transitions synchronized to the X_1 epochs.

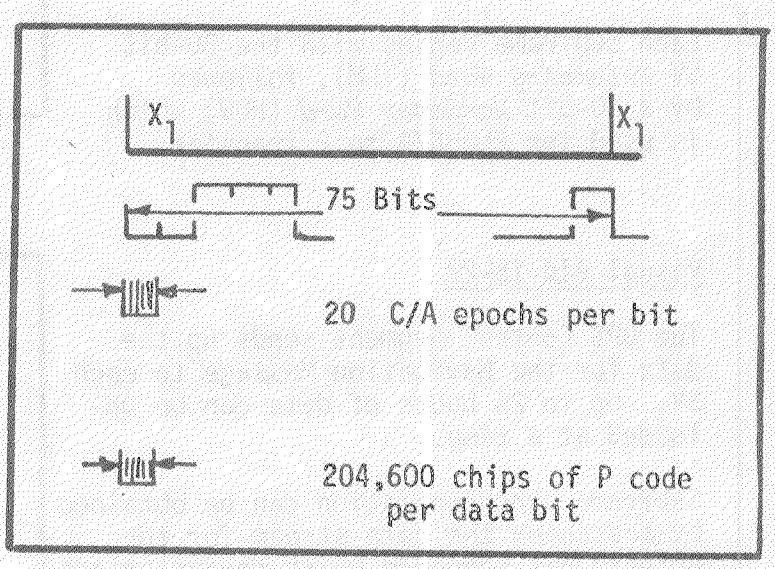

Visual Aid IB-20

The data are referred to as the *GPS Navigation Message*. These data give four kinds of information.

* SV Clock Correction Data
* SV Ephemeris Data
* Ephemeris Data on the Other SVs *(Almanac)*
* GPS System Messages

Visual Aid IB-21

The Navigation Message is 1500 bits long (a *frame*). It is divided into five 300-bit *subframes*. Each subframe contains ten 30-bit words. Each word lasts 0.6 sec. Transmission of a subframe takes 6 sec (four X_1 epochs).

Transmission of a complete message requires 30 sec (20 X_1 epochs).

Each subframe begins with the 30-bit SV *Telemetry Word* (TLM), followed by a 30-bit *Handover Word* (HOW) which is used for the C/A to P transfer.

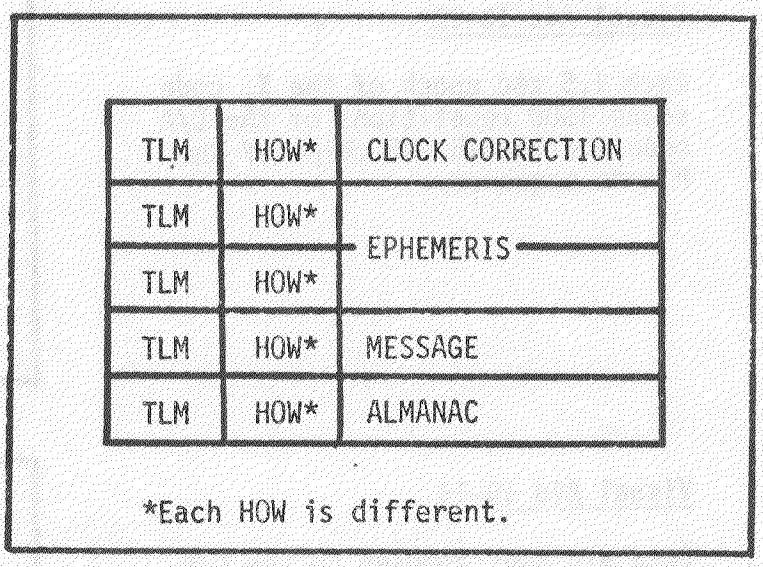

Visual Aid IB-22

The GPS Control Segment sends up the data for the Navigation Message to each SV. Up to 26 hours of data can be uploaded at a time.

Subframe synchronization can be obtained by searching the data stream for the 8B(hex) bit sequence which characterizes the TLM.

GPS parity is rather complex, but the TLM always has bits 29 and 30 as zeros to aid in data reversal detection.

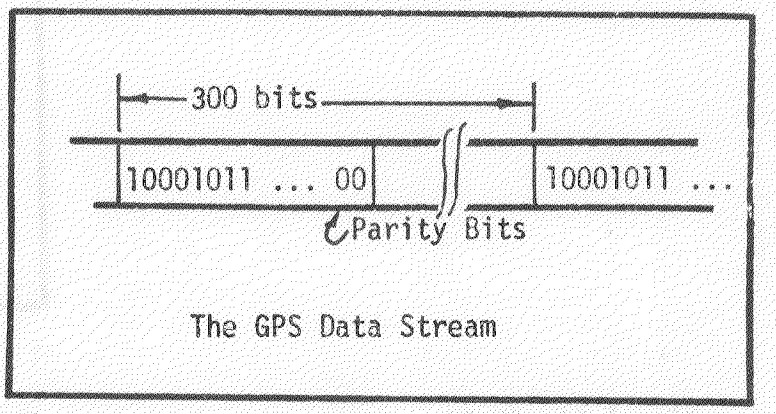

Visual Aid IB-23

The HOW supports the C/A to P transition. It contains a count of the number of subframes of data which have been transmitted since the start of the GPS week.

This "Z-count" identifies the number of the X_1 epoch which will correspond to the beginning of the *next* subframe. Since each data subframe corresponds to four X_1 epochs, the Z-count × 4 will give the number of that specific X_1 epoch.

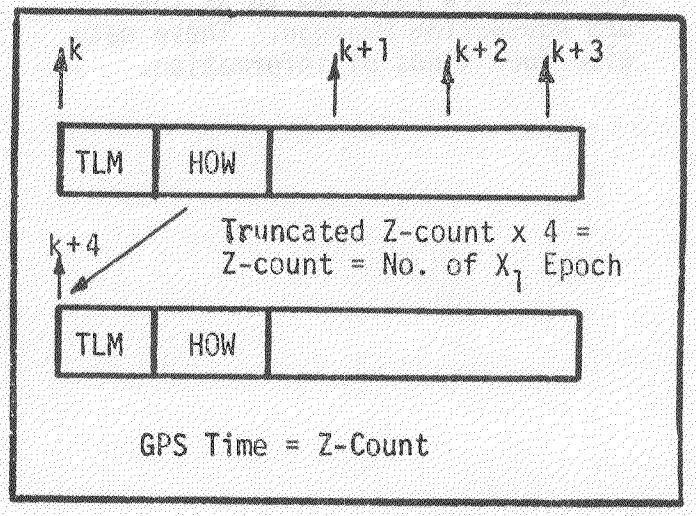

Visual Aid IB-24

DB I contains the SV Correction data.

* SV Clock Correction Data
* Age-of-Data-Correction Word (AODC)
* Ionospheric Delay Model Coefficients

Visual Aid IB-25

DB II gives a precise definition of the SV orbit.

Ephemeris data (DB II) gives the coefficients of a best-fit Keplerian orbital description for the SV which spans a period from 45 minutes before t_{OE} to 15 minutes thereafter.

The data in DB II changes every hour. Accuracies of better than 2 m are assured within this period.

Visual Aid IB-26

The sequence of ephemeris data allows a good fit to the actual SV orbit. The ephemeris data occupies subframes 2 and 3 of each Navigation Message.

The GPS CS predicts the SV orbit and sends up the sequence of data which "fits" the actual orbit over the next 6 or 26 hours.

The SV changes data automatically.

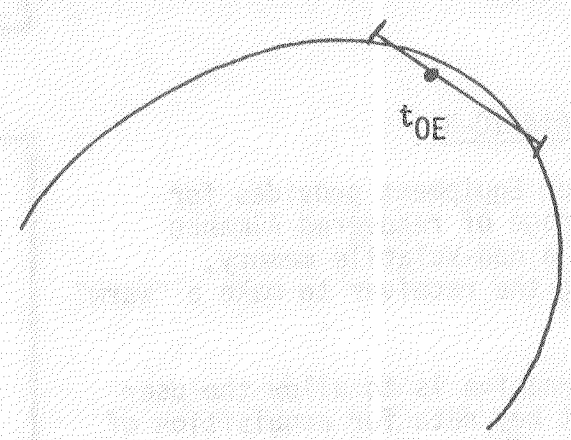

Session IC : System Considerations

Visual Aid IC-1

Data Block III always contains a description of the orbital and health parameters for one SV. The orbital parameters are expressed in truncated form.

The pages include an SV identification word.

Data Block III contains one of 25 "pages" of the Almanac, each page describing the orbit of one of the GPS SVs. A different page of the Almanac is transmitted in each successive Navigation Message.

The complete almanac repeats every 12.5 minutes.

Visual Aid IC-2

The Almanac data and an estimate of GPS time can be used to make rough calculations of SV locations for use in selecting a constellation or in receiver pre-positioning to acquire a SV for the first time. Then, DB II data can be brought down and used for accurate range and position calculations.

AGE OF ALMANAC	ACCURACY OF EPHEMERIS
1 day	1 km
1 week	2.5 km
2 weeks	5 km
3 weeks	10 km
4 weeks	15 km
5 weeks	20 km

Visual Aid IC-3

Most User Equipment provides for the storage of recovered Almanac data in a non-Volatile memory, allowing the receiver to make a "warm" start.

An alternative is to allow the user to input key data for acquisition of the first SV.

Fresh Almanac Data is sent to the SVs every 6 days or sooner...

Visual Aid IC-4

The Control Segment is headquartered at Vandenberg AFB, CA. At present, the data upload is made just before the Phase II SVs form a constellation over the Yuma Test Range.

The Monitor Stations receive the SV signals and send that data to VAFB. The MCS uses that measured data to define the SV clock offsets and orbital parameters. The ULS then corrects the SV clocks (if necessary) and sends up ephemeris and Almanac data through a 6 hour or 26 hour upload.

The Control Segment consists of:

1 Master Control Station

1 Upload Station

4 Monitor Stations

Visual Aid IC-5

The Yuma facilities are used to evaluate the performance of military GPS User Equipment. At present, both the Phase II SVs and the inverted transmitters can be used for testing.

The Yuma Test Range includes an "Inverted Range" with ground transmitters, and a precision laser tracking system.

Visual Aid IC-6

User Equipment has been manufactured by a variety of companies, including Magnavox, Texas Instruments, Rockwell, Teledyne, and several others.

USER EQUIPMENT

Phase I	Phase IIA	Phase IIB
Z Set	Manpack	Seven Sets configured to meet various military needs
Y Set	High-Dynamics	
X Set	Missle Set	

Visual Aid IC-7

A possible Receiver/Processor Assembly (RPA).

AMP = Antenna Management Proc.

RFP = Radio Frequency Proc.

RCP = Receiver Control Proc.

NVP = Navigation Processor

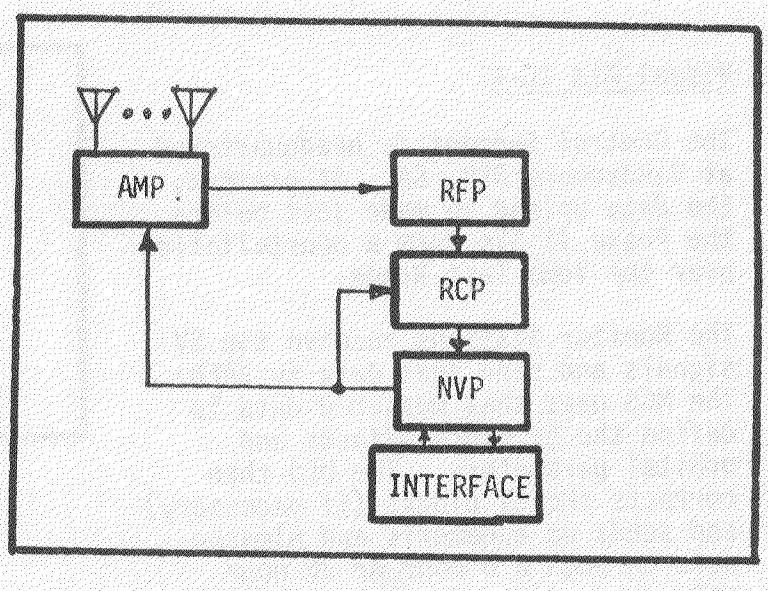

Visual Aid IC-8

The Antenna Management Processor tasks include:

The Antenna system generally includes a broadband preamplifier. Separate L_1 and L_2 preamplifiers can also be used.

* Antenna Selection
* Beam Steering
* Null Steering
* L_1/L_2 Switching
* Testing and Calibration

Visual Aid IC-9

The Radio Frequency section performs two basic tasks:

* Broadband filtering (2 or 20 MHz)
* Frequency down-conversion (L_1 and L_2 to some IF)
* Amplification
* Generation of User Time Standard(s)

Visual Aid IC-10

The Receiver Control Processor has many tasks, as:

* Local C/A and P code generation
* Code pre-positioning
* Doppler offset pre-positioning
* Range and Range-rate measurement
* Code and Frequency tracking
* Data Recovery
* Loss of Signal Handling

Visual Aid IC-11

The Navigation Processor needs a strong mathematical processing capability. Longer word lengths (16 bit processor) and special-purpose support units (as a Floating-point Unit or a Trig Processor) are also desirable.

* Calculate User Position
* Filter User Position Estimates
* Calculate Pre-positioning Values
* Select SV Constellation
  GDOP/In-view/Age of Data
* Loss of SV Handling
* Incorporation of Aiding Information

Visual Aid IC-12

Aiding can help the RPA a lot, especially when the User is subject to poor signal/noise ratios or violent maneuvers.

Aiding information such as

Velocity

Acceleration

Heading

Altitude

can help the tracking loops in the receiver maintain lock.

Visual Aid IC-13

A major RPA design choice is the use of a single RF channel (a *Sequential* Receiver) versus a multi-channel configuration.

Problems With a Sequential RPA:

* Reacquisition
* Data Recovery
* Initial Acquisition Time
* TTFF
* L_1/L_2 Measurements

Visual Aid IC-14

RPA design considerations include:

Add "Choice of Clock Source" to this list!

* Tracking versus Estimation of Correlation Peak
* RF Frequency Planning
* Antenna Design
* Analog versus Digital Signal Processing
* R/R Search Strategy
* Correlation Detection Scheme
* Selection of Navigation Calculations
* Selection of Processor(s)
* Data Storage Technology and Size
* Programming Techniques
* Operator Interface
* Aiding
* Testing and Calibration
* Maintenance and Repair

II A-1

1 This portion of the short course is devoted to navigation theory and navigation processing using satellite trilateration. Imagine a satellite/user configuration where the user views the satellite through a telescope. If the satellite and user clocks are synchronized they have the same time. However the satellite time recorded, T_R, by a user will differ from user time T_U by the time of transit,

$$T_D = T_U - T_R$$

and distance, $D = T_D \cdot c$ where c is the speed of light.

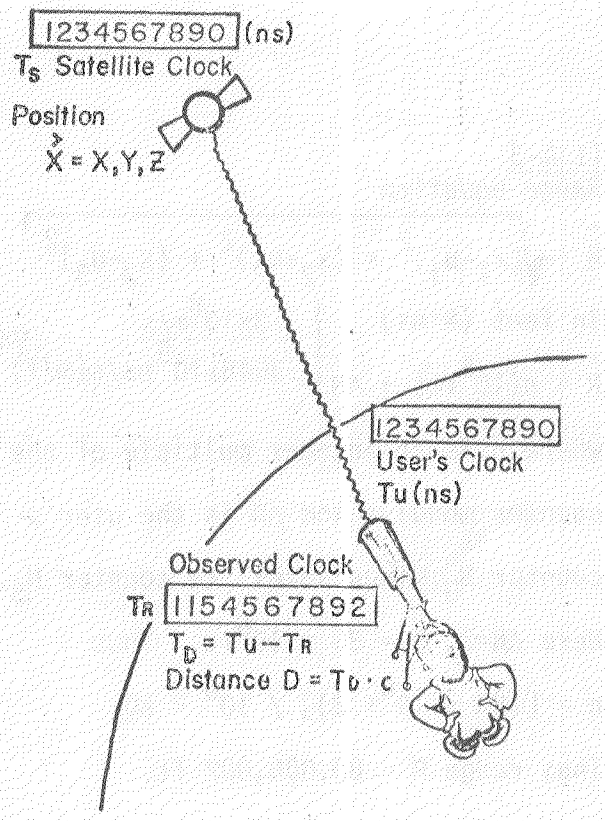

II A-2

2 If we know our position and the satellite's position well enough to distinguish between 80, 81, or 82 Mft. We can eliminate all higher order digits and use only the low order 6 digits.

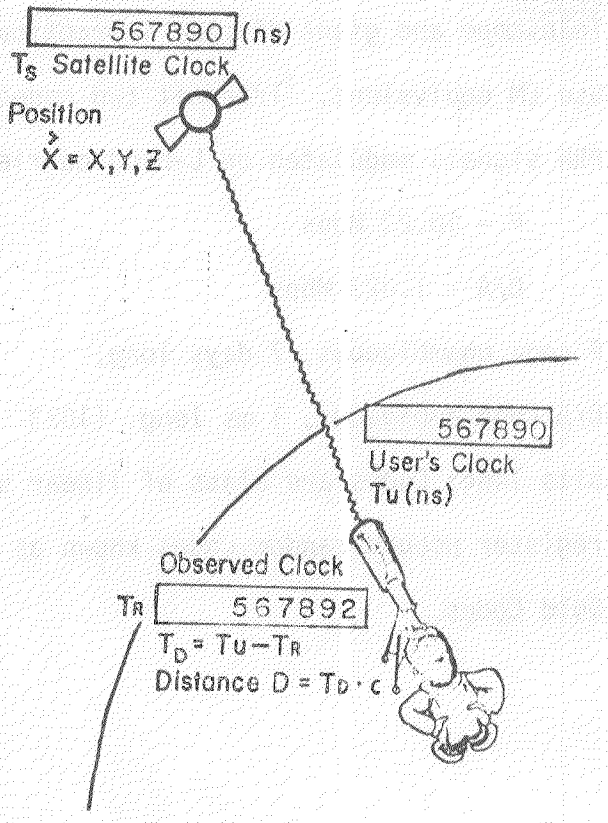

II A-3

3 Range equation

$$\hat{R} = \sqrt{(x_1-u_1)^2 + (x_2-u_2)^2 + (x_3-u_3)^2}$$

In feet (@·ns)

$$\hat{R} = n(10^6 \text{ft}) + \Delta N \left[\frac{3\times10^8 \text{m/s}}{.3048\times10^9 \text{ns/s(m/f)}} = .948 \text{f/ns}\right]$$

where n is an integer multiple of the counter modulus and ΔN is the user's counter N_U minus satellite counter N_S. Here ΔN=2, $\hat{R}$ = 80 x 10^6ft. Thus n = [(80 x 10^6+ 2)] / 10^6 = 80. Thus range R = 80,000,002 ft.

$$\hat{R} = \sqrt{(X_1-U_1)^2 + (X_2-U_2)^2 + (X_3-U_3)^2}$$

$$\hat{R} = 80 \times 10^6 \text{ ft}$$

$$\hat{R} = m(\text{MOD}) + \Delta N$$

$$\Delta N = N_S - N_U = 2 \text{ ft.(ns)}$$

$$\text{MOD} = 10^6 \text{ ft.(ns)}$$

$$\therefore m = [(R-\Delta N)] / 10^6$$

$$= [(80\times10^6-2)] / 10^6 = 80$$

$$\therefore R = 80\times10^6 + 2$$

$$= 80000002 \text{ ft.(ns)}$$

II A-4

4 Telescope and giant display impractical. Use EM equivalent. Transmit two coded PRN signals modulated on L-band carriers

P - 10.23 Mbps

C/A - 1.023 Mbps

P code unambiguous, 7 days long.

C/A code ambiguous, 1 ms long. (1023 bits long) Codes are class of linear shift register pseudo-random codes known as Gold Codes.

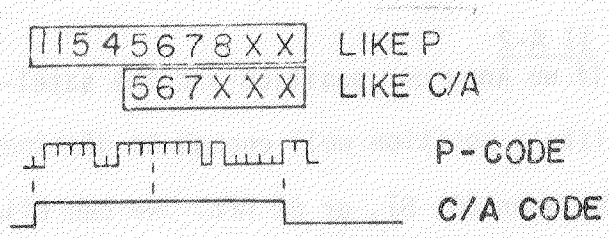

P – Code 10.23 Mbps

C/A Code 1.023 Mbps

C/A Code repeats (1023 bits) in 1 ms

P – Code repeats after 1 week

II A-5

5 Range is measured as the time delay between transmission and reception. Assuming SV and User's clocks are synchronized. The PRN codes will be received, but displaced in time Δt, the amount of time required for the signal to travel from the SV to the user. Thus, if the User also generates the PRN codes all he must do is shift his code to align with the received SV code

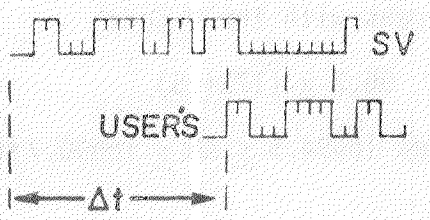

Shift To ALIGN

II A-6

6 However, a C/A chip (bit) is 293 m. (962 ft) wide or almost our full 3 least significant digits on our telescope counter. P code alignment cuts this to 29.3 m (96.2ft)-still 2 full digits lost from our telescope.

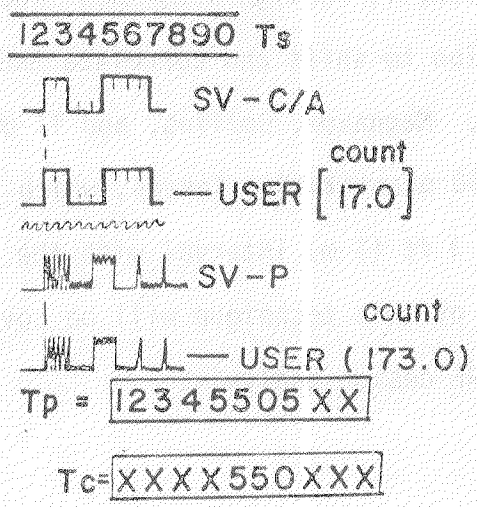

II A-7

7 Thus a count of 17 represents

962 x (17±.5) or 15873 ≤ ΔN ≤ 16835 ft.

Whereas with the P-code

96.2 x (173±.5)

gives 16594.5 ≤ ΔN ≤ 16690.7 ft.

C/A Count 17 gives

15873 ≤ ΔN ≤ 16835 ft.

P Count 173 gives

16594.5 ≤ ΔN ≤ 16690.7 ft

II A-8

8 Actual receiver design uses much finer resolution to shift and correlate the two signals. Magnavox, Collins, and TI use around 60 quantization levels, which bound ΔN in a 3 ft (1 m) interval with the P-code. Details of this technique will be covered in the RF design analysis.

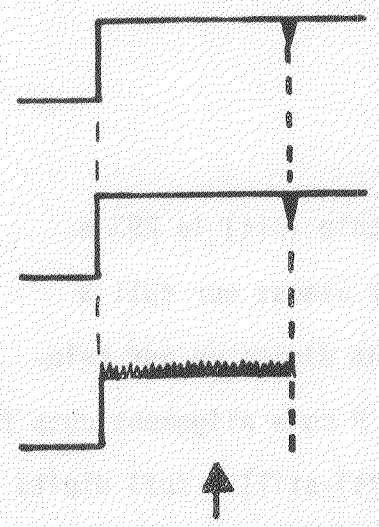

60 + QUANTIZATION REQUIRED.

FOR 1M ACCURACY. (P Code)

II A-9

9 The Range is calculated as the solution of the 3-D Pythagorean Theorem.

$R_T^2 = (x_1-u_1)^2 + (x_2-u_2)^2 + (x_3-u_3)^2$

but since User's clock is not perfect (later we will see satellites are), then

$R_T = R - b$ and

$R_T^2 = (R - b)^2 = \sum_{j=1}^{3} (x_j-u_j)^2$ or

$$R = \left[\sum_{j=1}^{3} (x_j-u_j)^2 \right]^{\frac{1}{2}} + b$$

where R is known as the pseudorange, and $b = \tau_c \cdot c$ the clock bias and $\tau_c = t_{0_{SV}} - t_{0_U}$, c is the speed of light.

$$R_T^2 = (X_1-U_1)^2+(X_2-U_2)^2+(X_3-U_3)^2$$

$$R_T^2 = (R-\ell)^2 = \sum_{j=1}^{3} (X_j-U_j)^2$$

$$R = \left[\sum_{j=1}^{3} (X_j-U_j)^2 \right]^{1/2} + \ell$$

$$\ell = Tc \cdot C$$

Where $Tc = t_{osv} - t_{ou}$

$$C = 3 \times 10^8 \text{ m/s}$$

II A-10

10 Although other alternatives exist, if 4 pseudoranges are measured, 4 equations involving $[u_1,u_2,u_3,b]$ can be solved by a linear technique:

$$\begin{bmatrix} u_1 \\ u_2 \\ u_3 \\ b \end{bmatrix} = H^{-1}\delta R + [\hat{u}]$$

where H is a 4x4 matrix of direction cosines, δR is the 4x1 vector difference between measured and estimated pseudoranges, and $[\hat{u}]$ is the 4x1 estimated position vector. Details of this solution are given later.

GIVEN 4 PSEUDORANGES

$$R_i = \left[\sum_{j=1}^{3} (X_{ij}-U_j)^2 \right]^{1/2} + \ell \; ; \; i=1,4$$

BY LINEARIZATION OBTAIN

$$\begin{bmatrix} \underline{U} \\ \hdashline \ell \end{bmatrix} = H^{-1}\delta R + \begin{bmatrix} \hat{\underline{U}} \\ \hdashline \hat{\ell} \end{bmatrix}$$

Where $\underline{U}, \hat{\underline{U}}$ are position vector solution and estimates, H is a 4 x 4 matrix of direction cosines, and δR is a 4x1 vector of range differences

II A-11

11 Navigation accuracy is highly dependent on satellite geometry, much as it is in celestial navigation (or trilateration in general). Optimal selection of satellites is obtained by minimizing

$$GDOP = \sqrt{tr[H^T H]^{-1}}$$

where H is the matrix of direction cosines described previously, and trace, tr(A) = $\sum_{i=1}^{n} a_{ii}$, the sum of the main diagonal elements.

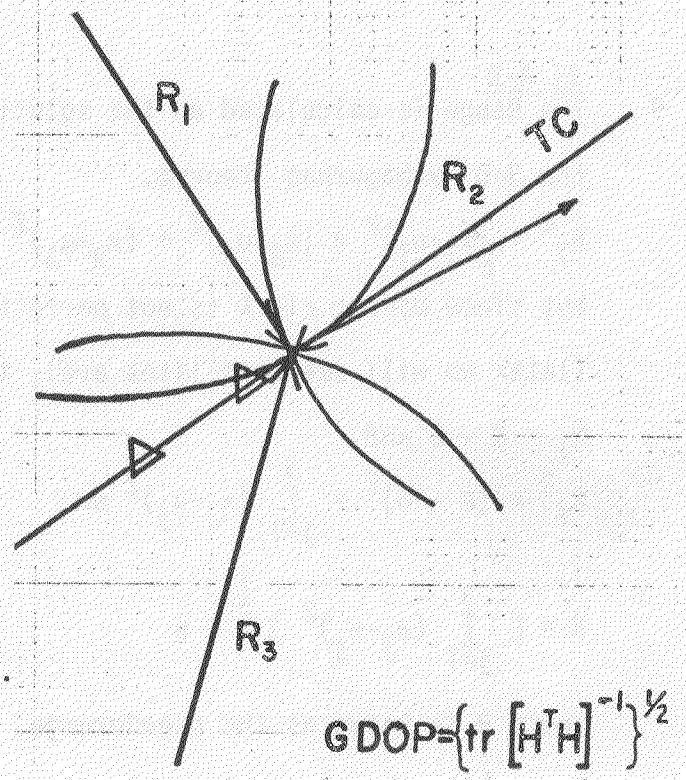

II A-12

12 The meaning of these various orbital parameters is shown here. Eccentric anomaly, E, is the angle to a point, Q, above the point, B, on the elliptic orbit; whereas, v is the true anomaly which is needed to solve for (x'_w, y'_w) in the orbital plane.

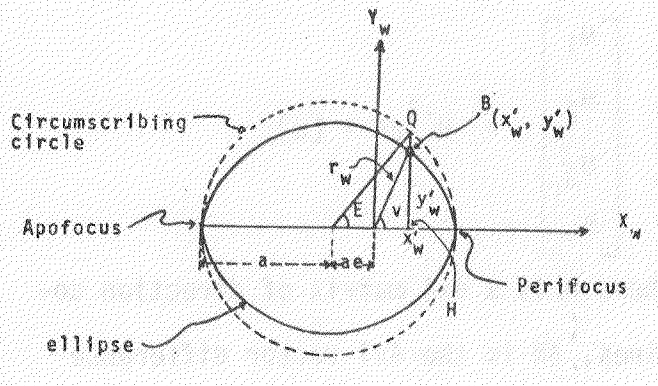

True anomaly determination for a body B moving in an elliptic orbit

II A-13

13 Subsequently further transformations are required to rotate the body in the ECEF (xyz) system.

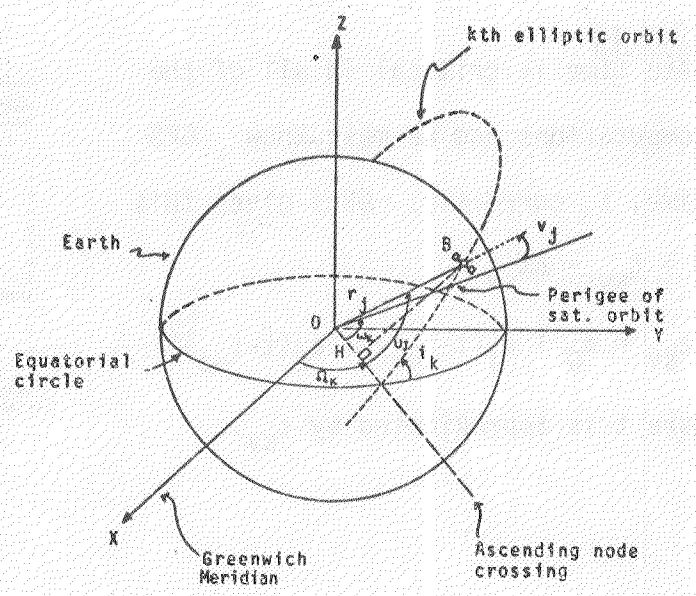

Satellite coordinate conversion to Earth Centered Earth Fixed coordinate system

II A-14

14 ECEF coordinates for ephemeris for DB II transformation.

Ephemeris Representation Parameters	
M_o	Mean anomaly at reference time
Δn	Mean motion difference from computed value
e	Eccentricity
$\sqrt{A}$	Square root of the semi-major axis
Ω_o	Right ascension at reference time
i_o	Inclination angle at reference time
ω	Argument of perigee
$\dot{\Omega}$	Rate of right ascension
C_{uc}	Amplitude of the cosine harmonic correction term to the argument of latitude
C_{us}	Amplitude of the sine harmonic correction term to the argument of latitude
C_{rc}	Amplitude of the cosine harmonic correction term to the orbit radius
C_{rs}	Amplitude to the sine harmonic correction term to the orbit radius
C_{ic}	Amplitude of the cosine harmonic correction term to the angle of inclination
C_{is}	Amplitude of the sine harmonic correction term to the angle of inclination
t_{oe}	Ephemeris reference time
AODE	Age of Data (Ephemeris)

Ephemeris Representation Definitions

$\mu = 3.986008 \times 10^{14}$ meters^3/sec^2	WGS 72 value of the earth's universal gravitational parameter
$\dot{\Omega}_e = 7.292115147 \times 10^{-5}$ rad/sec	WGS 72 value of the earth's rotation rate
$A = (\sqrt{A})^2$	Semi-major axis
$n_o = \sqrt{\frac{\mu}{A^3}}$	Computed mean motion
$t_k = t - t_{oe}$*	Time from epoch
$n = n_o + \Delta n$	Corrected mean motion
$M_k = M_o + nt_k$	Mean anomaly
$M_k = E_k - e \sin E_k$	Kepler's equation for eccentric anomaly
$\cos v_k = (\cos E_k - e)/(1 - e \cos E_k)$	True anomaly
$\sin v_k = \sqrt{1 - e^2} \sin E_k/(1 - e \cos E_k)$	
$\phi_k = v_k + \omega$	Argument of latitude
$\delta u_k = C_{us} \sin 2\phi_k + C_{uc} \cos 2\phi_k$	Argument of latitude correction
$\delta r_k = C_{rs} \cos 2\phi_k + C_{rc} \sin 2\phi_k$	Radius correction
$\delta i_k = C_{is} \cos 2\phi_k + C_{ic} \sin 2\phi_k$	Correction to inclination
$u_k = \phi_k + \delta u_k$	Corrected argument of latitude
$r_k = A(1 - e \cos E_k) + \delta r_k$	Corrected radius
$i_k = i_o + \delta i_k$	Corrected inclination
$x_k' = r_k \cos u_k$	Positions in orbital plane
$y_k' = r_k \sin u_k$	
$\Omega_k = \Omega_o + (\dot{\Omega} - \dot{\Omega}_e)t_k - \dot{\Omega}_e t_{oe}$	Corrected longitude of ascending node
$x_k = x_k' \cos \Omega_k - y_k' \cos i_k \sin \Omega_k$	Earth fixed coordinates
$y_k = x_k' \sin \Omega_k + y_k' \cos i_k \cos \Omega_k$	
$z_k = y_k' \sin i_k$	

* t is GPS system time at time of transmission, i.e., GPS time of reception corrected for transit time (range/speed of light). Furthermore, t_k must be the actual total time difference between the time t and the epoch time t_{oe}, and must account for beginning or end of week crossovers. That is, if t_k is greater than 302,400, subtract 604,800 from t_k. If t_k is less than −302,400 add 604,800 to t_k.

II A-15

15 Also time is critical in all of the computations and we must know GPS time, t, correctly. DB I gives this

$$t = t_{sv} - \Delta t_{sv}$$

$$\Delta t_{sv} = a_0 + a_1(t-t_{oc}) + a_2(t-t_{oc})^2$$

Here t is approximated by t_{sv}.

Data Block 1 Parameters

Parameter	No. of Bits	Scale Factor (LSB)	Range*	Units
Spare	24	—	—	—
Spare	24	—	—	—
α_0	8	2^{-30}	$\pm 2^{-24}$	seconds
α_1	8	2^{-27}	$\pm 2^{-24}$	seconds
α_2	8	2^{-24}	$\pm 2^{-23}$	seconds
α_3	8	2^{-24}	$\pm 2^{-23}$	seconds
β_0	8	2^{11}	$\pm 2^{15}$	seconds
β_1	8	2^{14}	$\pm 2^{16}$	seconds
β_2	8	2^{16}	$\pm 2^{17}$	seconds
β_3	8	2^{16}	$\pm 2^{19}$	seconds
T_{GD}	8	$2^{-31} \approx 4.66 \times 10^{-10}$	$\pm 2^{-24} \approx \pm 5.96 \times 10^{-8}$	seconds
$AODC$	8	$2^{11} = 2048$	$2^{19} = 524288$	seconds
t_{oc}	16	$2^4 = 16$	604,784	seconds
a_2	8	$2^{-55} \approx 2.78 \times 10^{-17}$	$\pm 2^{-40} \approx \pm 3.553 \times 10^{-15}$	sec/sec^2
a_1	16	$2^{-43} \approx 1.14 \times 10^{-13}$	$\pm 2^{-26} \approx \pm 3.725 \times 10^{-9}$	sec/sec
a_0	22	$2^{-31} \approx 4.656 \times 10^{-10}$	$\pm 2^{-10} \approx \pm 9.766 \times 10^{-4}$	seconds

* indicates that sign bit will occupy the most significant bit (MSB).
NOTE: All binary numbers will be two's complement.

II A-16

16 DB II parameters provide user with ephemeris accuracies on the order of 1 m. These parameters are used in the Keplerian orbit equations to transform orbit frame reference coordinates to ECEF (xyz) coordinates.

Data Block 2 Parameters

Parameter	No. of Bits	Scale Factor (LSB)	Range*	Units
$AODE$	8	$2^{11} = 2048$	524,288	seconds
C_{rs}	16	$2^{-5} = .03125$	±1024	meters
Δn	16	$2^{-43} \approx 1.14 \times 10^{-13}$	$\pm 3.73 \times 10^{-9}$	semicircles/sec
M_0	32	$2^{-31} \approx 4.66 \times 10^{-10}$	±1.	semicircles
C_{uc}	16	$2^{-29} \approx 1.86 \times 10^{-9}$	$\pm 6.10 \times 10^{-5}$	radians
e	32	$2^{-33} \approx 1.16 \times 10^{-10}$	.5	dimensionless
C_{us}	16	$2^{-29} \approx 1.86 \times 10^{-9}$	$\pm 6.10 \times 10^{-5}$	radians
$\sqrt{A}$	32	$2^{-19} \approx 1.91 \times 10^{-6}$	8192	meters$^{1/2}$
t_{oe}	16	$2^4 = 16$	604,784	seconds
Spare	6	—	—	—
C_{ic}	16	$2^{-29} \approx 1.86 \times 10^{-9}$	$\pm 6.10 \times 10^{-5}$	radians
Ω_0	32	$2^{-31} \approx 4.66 \times 10^{-10}$	±1.	semicircles
C_{is}	16	$2^{-29} \approx 1.86 \times 10^{-9}$	$\pm 6.10 \times 10^{-5}$	radians
i_0	32	$2^{-31} \approx 4.66 \times 10^{-10}$	±1.	semicircles
C_{rc}	16	$2^{-5} = .03125$	±1024	meters
ω	32	$2^{-31} \approx 4.66 \times 10^{-10}$	±1	semicircles
$\dot{\Omega}$	24	$2^{-43} \approx 1.14 \times 10^{-13}$	$\pm 9.54 \times 10$	semicircles/sec
$AODC$	8	$2^{11} = 2048$	524,288	seconds
Spare	14	—	—	—

* (±) indicates that the sign bit shall occupy the most significant bit (MSB)
NOTE: All binary numbers will be two's complement.

Data Block 1 Parameters

Parameter	No. of Bits	Scale Factor (LSB)	Range*	Units
Spare	24	—	—	—
Spare	24	—	—	—
α_0	8	2^{-30}	$\pm 2^{-24}$	seconds
α_1	8	2^{-30}	$\pm 2^{-24}$	seconds
α_2	8	2^{-29}	$\pm 2^{-22}$	seconds
α_3	8	2^{-28}	$\pm 2^{-21}$	seconds
β_0	8	2^{8}	$\pm 2^{15}$	seconds
β_1	8	2^{9}	$\pm 2^{16}$	seconds
β_2	8	2^{10}	$\pm 2^{17}$	seconds
β_3	8	2^{12}	$\pm 2^{19}$	seconds
T_{GD}	8	$2^{-31} \approx 4.66 \times 10^{-10}$	$\pm 2^{-24} \approx \pm 5.96 \times 10^{-8}$	seconds
$AODC$	8	$2^{11} = 2048$	$2^{19} = 524288$	seconds
t_{oc}	16	$2^{4} = 16$	604,784	seconds
a_2	8	$2^{-55} \approx 2.78 \times 10^{-17}$	$\pm 2^{-48} \approx \pm 3.553 \times 10^{-15}$	sec/sec^2
a_1	16	$2^{-43} \approx 1.14 \times 10^{-13}$	$\pm 2^{-28} \approx \pm 3.725 \times 10^{-9}$	sec/sec
a_0	22	$2^{-32} \approx 4.656 \times 10^{-10}$	$\pm 2^{-10} \approx \pm 9.766 \times 10^{-4}$	seconds

* (±) indicates that sign bit will occupy the most significant bit (MSB).
NOTE: All binary numbers will be two's complement.

Data Block 2 Parameters

Parameter	No. of Bits	Scale Factor (LSB)	Range*	Units
$AODE$	8	$2^{11} = 2048$	524,288	seconds
C_{rs}	16	$2^{-5} = .03125$	±1024	meters
Δn	16	$2^{-43} \approx 1.14 \times 10^{-13}$	$\pm 3.73 \times 10^{-9}$	semicircles/sec
M_o	32	$2^{-31} \approx 4.66 \times 10^{-10}$	±1.	semicircles
C_{uc}	16	$2^{-29} \approx 1.86 \times 10^{-9}$	$\pm 6.10 \times 10^{-5}$	radians
e	32	$2^{-33} \approx 1.16 \times 10^{-10}$	.5	dimensionless
C_{us}	16	$2^{-29} \approx 1.86 \times 10^{-9}$	$\pm 6.10 \times 10^{-5}$	radians
$\sqrt{A}$	32	$2^{-19} \approx 1.91 \times 10^{-6}$	8192	meters$^{1/2}$
t_{oe}	16	$2^{4} = 16$	604,784	seconds
Spare	6	—	—	—
C_{ic}	16	$2^{-29} \approx 1.86 \times 10^{-9}$	$\pm 6.10 \times 10^{-5}$	radians
Ω_o	32	$2^{-31} \approx 4.66 \times 10^{-10}$	±1.	semicircles
C_{is}	16	$2^{-29} \approx 1.86 \times 10^{-9}$	$\pm 6.10 \times 10^{-5}$	radians
i_o	32	$2^{-31} \approx 4.66 \times 10^{-10}$	±1.	semicircles
C_{rc}	16	$2^{-5} = .03125$	±1024	meters
ω	32	$2^{-31} \approx 4.66 \times 10^{-10}$	±1.	semicircles
$\dot{\Omega}$	24	$2^{-43} \approx 1.14 \times 10^{-13}$	$\pm 9.54 \times 10^{-7}$	semicircles/sec
$AODE$	8	$2^{11} = 2048$	524,288	seconds
Spare	14	—	—	—

* (±) indicates that the sign bit shall occupy the most significant bit (MSB).
NOTE: All binary numbers will be two's complement.

Data Block 3 Parameters

Parameter	No. of Bits	Scale Factor (LSB)	Range*	Units
ID	8	1	255	discretes
e	16	$2^{-21} \approx 4.77 \times 10^{-7}$	0.03125	dimensionless
t_{oa}	8	$2^{12} = 4096$	602,112	seconds
δi	16	$2^{-19} \approx 1.91 \times 10^{-6}$	± 0.0625	semicircles
Health	8	1	255	discretes
$\dot{\Omega}$	16	$2^{-38} \approx 3.64 \times 10^{-12}$	$\pm 1.19 \times 10^{-7}$	semicircles/sec
$\sqrt{A}$	24	$2^{-11} \approx 4.88 \times 10^{-4}$	8192	meters$^{1/2}$
Ω_o	24	$2^{-23} \approx 1.19 \times 10^{-7}$	±1.	semicircles
ω	24	$2^{-23} \approx 1.19 \times 10^{-7}$	±1.	semicircles
M_o	24	$2^{-23} \approx 1.19 \times 10^{-7}$	±1.	semicircles
a_0	8	$2^{-17} \approx 7.63 \times 10^{-6}$	$\pm 9.77 \times 10^{-4}$	seconds
a_1	8	$2^{-35} \approx 2.91 \times 10^{-11}$	$\pm 3.73 \times 10^{-9}$	sec/sec
SPARE	6	—	—	—

* (±) indicates that the sign bit will occupy the most significant bit (MSB).
$i_o = 0.333333333$ *semicircles*
NOTE: All binary numbers will be two's complement.

Ephemeris Representation Definitions

$\mu = 3.986008 \times 10^{14}$ meters^3/sec^2		WGS 72 value of the earth's universal gravitational parameter
$\dot{\Omega}_e = 7.292115147 \times 10^{-5}$ rad/sec		WGS 72 value of the earth's rotation rate
$A = (\sqrt{A})^2$		Semi-major axis
$n_o = \sqrt{\frac{\mu}{A^3}}$		Computed mean motion
$t_k = t - t_{oe}$*		Time from epoch
$n = n_o + \Delta n$		Corrected mean motion
$M_k = M_o + nt_k$		Mean anomaly
$M_k = E_k - e \sin E_k$		Kepler's equation for eccentric anomaly
$\cos v_k = (\cos E_k - e)/(1 - e \cos E_k)$ $\sin v_k = \sqrt{1 - e^2} \sin E_k/(1 - e \cos E_k)$	}	True anomaly
$\phi_k = v_k + \omega$		Argument of latitude
$\delta u_k = C_{us} \sin 2\phi_k + C_{uc} \cos 2\phi_k$		Argument of latitude correction
$\delta r_k = C_{rs} \cos 2\phi_k + C_{rc} \sin 2\phi_k$	}	2nd harmonic perturbations
$\delta i_k = C_{ic} \cos 2\phi_k + C_{is} \sin 2\phi_k$		Correction to inclination
$u_k = \phi_k + \delta u_k$		Corrected argument of latitude
$r_k = A(1 - e \cos E_k) + \delta r_k$		Corrected radius
$i_k = i_o + \delta i_k$		Corrected inclination
$x_k' = r_k \cos u_k$		Positions in orbital plane
$y_k' = r_k \sin u$		
$\Omega_k = \Omega_o + (\dot{\Omega} - \dot{\Omega}_e)t_k - \dot{\Omega}_e t_{oe}$		Corrected longitude of ascending node
$x_k = x_k' \cos \Omega_k - y_k' \cos i_k \sin \Omega_k$ $y_k = x_k' \sin \Omega_k + y_k' \cos i_k \cos \Omega_k$ $z_k = y_k' \sin i_k$	}	Earth fixed coordinates

* t is GPS system time at time of transmission, i.e., GPS time of reception corrected for transit time (range/speed of light). Furthermore, t_k must be the actual total time difference between the time t and the epoch time t_{oe}, and must account for beginning or end of week crossovers. That is, if t_k is greater than 302,400, subtract 604,800 from t_k. If t_k is less than −302,400 add 604,800 to t_k.

II A-17

17 Each of the 300 bit words takes 6 secs. to acquire. The total 5 words take 30 secs. The almanac is transmitted on a rotating basis; i.e., every 30 sec. a new almanac for a new satellite appears. 25 time slots are used with ID number 0 being a dummy. This subframe is present because of a User requirement to have an odd number of almanac subframes in their DB III collection. Data Block III contains a subset of DB I and DB II parameters essential for SV acquisition.

Data Block 3 Parameters

Parameter	No. of Bits	Scale Factor (LSB)	Range*	Units
ID	6	1	25	decretes
e	16	$2^{-11} \approx 4.77 \times 10^{-7}$	0.03125	dimensionless
t_{oa}	8	$2^{12} = 4096$	602,112	seconds
δi	16	$2^{-19} \approx 1.91 \times 10^{-6}$	± 0.0625	semicircles
Health	8	1	255	discretes
$\dot{\Omega}$	16	$2^{-38} \approx 3.64 \times 10^{-12}$	$\pm 1.19 \times 10^{-7}$	semicircles/sec
$\sqrt{A}$	24	$2^{-11} \approx 4.88 \times 10^{-4}$	8192	meters$^{1/2}$
Ω_0	24	$2^{-23} \approx 1.19 \times 10^{-7}$	±1.	semicircles
ω	24	$2^{-23} \approx 1.19 \times 10^{-7}$	±1.	semicircles
M_0	24	$2^{-23} \approx 1.19 \times 10^{-7}$	±1.	semicircles
a_0	8	$2^{-17} \approx 7.63 \times 10^{-6}$	$\pm 9.77 \times 10^{-4}$	seconds
a_1	8	$2^{-35} \approx 2.91 \times 10^{-11}$	$\pm 3.73 \times 10^{-9}$	sec/sec
SPARE	6	—	—	—

* (±) indicates that the sign bit will occupy the most significant bit (MSB).
$t_{oa} = 0.33333333$ *semicircles*
NOTE: All binary numbers will be two's complement.

II A-18

18 Almanac (DB-III) gives ability to compute data age: $AODA = T_K + 302{,}400$ (sec) (1/2 week)

where

$$T_K = T_{UY} - T_{CY} + T_{KC}$$

& $T_{UY} = (D_{TC}-1)86400 + T_C \text{MOD} 86400$ (1 day)

where D_{TC} is time of year at Greenwich at time T_C, the time the almanac was collected.

$$T_{CY} = (D_{TU}-1)86400 + T_U \text{MOD} 86400$$

where D_{TU} is time of year at Greenwich at time T_U, the GPS time of use.

$$T_{KC} = T_C - T_{OA}$$

where T_C is collection time and T_{OA} is almanac time from DB-III.

$$AODA = T_K + 302{,}400 \text{ (sec)}$$

where

$$T_K = T_{UY} - T_{CY} + T_{KC}$$

$$T_{UY} = (D_{TC}-1)86400 + T_C \text{MOD} 86400$$

$$T_{CY} = (D_{TU}-1)86400 + T_U \text{MOD} 86400$$

$$T_{KC} = T_C - T_{OA}$$

II A 19

19 Nav. accuracy is also dependent on synchronization of satellite clocks, removal of relativistic effects, and availability of real-time, accurate, ephemerides data on every satellite. A 50 Hz data stream is modulated on the L band carrier as well as the C/A and P-codes. This data stream consists of 5-300 bit words; Data Block I- time and ionosphere, 300 bits; Data Block II- ephemerides parameters, 600 bits; DB III- Almanac, 300 bits (rotating); and Message Block.

See Next Page

II A-20

20 In summary, the problem of navigating via satellites is a simple trilateration concept as old as navigation. Details to obtain accuracy are what make it complex: ·Accurate time

·Accurate ephemeris

·Satellite geometry

·Other error sources

·Actual Measurement technique

Furthermore, the single frequency multiple code, spread spectrum aspects of the signal is an entirely separate complication.

SUMMARY

* SIMPLE TRILATERATION
* ACCURACY COMPLICATES
  *ACCURATE TIME
  *ACCURATE EPHEMERIS
  *SATELLITE GEOMETRY
  *OTHER ERROR SOURCES
  *ACTUAL MEASUREMENT TECHNIQUES
* SPREAD SPECTRUM SIGNAL

GPS SIGNAL DATA FRAME CONTENT

EACH WORD IS A 30-BIT WORD--6 P-BITS ARE USED IN PARITY CHECKS

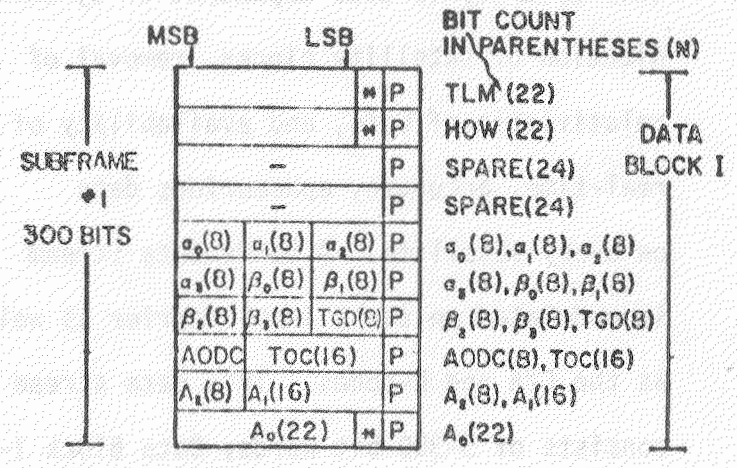

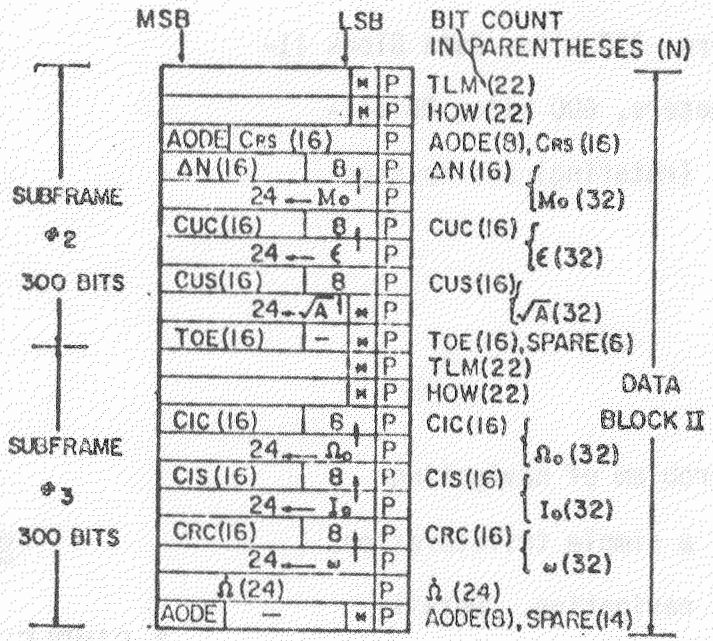

MESSAGE BLOCK AND DATA BLOCK III

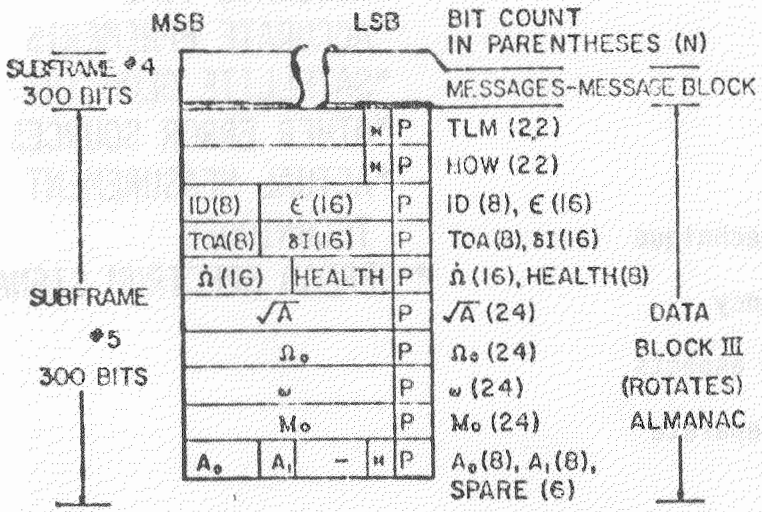

TLM, HOW, & OTHERS MARKED USE 2 MORE BITS IN PARITY CHECK.

II B-21

21 In addition to obtaining the 3-D user's coordinates the set's clock has an unknown bias and drift:

$b = b_0 + \dot{b}\Delta t$

$[u_1, u_2, u_3, b]$ can be solved by direct solution, Taylor series linearization, or by using a Kalman filter. We will consider the linear approach and the Kalman filter approach tomorrow. First we expand the range equation in a Taylor series and drop all terms but the first.

22 II B-22

Now, it turns out that $\left.\frac{\partial R_i}{\partial u}\right|_{\bar{u}}$ generates a 4x1 vector of direction cosines; i.e.,

$$\left.\frac{\partial R_i}{\partial u}\right|_{\bar{u}} = \left[\frac{\bar{u}_1 - x_{i1}}{\bar{R}_i - \bar{b}} \quad \frac{\bar{u}_2 - x_{i2}}{\bar{R}_i - \bar{b}} \quad \frac{\bar{u}_3 - x_{i3}}{\bar{R}_i - \bar{b}} \quad 1\right]$$

since $R_i - b = R_T$, the true range. In GPS usage this has typically been called the h vector, or H matrix when all 4 ranges are represented. Thus,

$\left[\left.\frac{\partial R_i}{\partial u}\right|_{\bar{u}}\right] = [h_{ij}]$ i,j = 1,4 and

$\delta R_{4x1} = H_{4x4}\delta u_{4x1}$, $\delta u = H^{-1}\delta R$,

$u_k = u_{k-1} + \delta u$; $u_{k-1} = \bar{u}$

USER'S CLOCK BIAS:

$$b = b_0 + \dot{b}\Delta t$$

Where b_0 is the initial BIAS and $\dot{b}$ is the DRIFT.

THE RANGE EQUATION

$R_i = \left[\sum_{j=1}^{n}(X_{ij} - U_j)^2\right]^{1/2} + b$; i = 1,4 CAN BE EXPANDED AS;

$$R_i = \bar{R}_i + \left.\frac{\partial R_i}{\partial u}\delta u\right|_{\bar{u}} + \frac{1}{2}\left.\frac{\partial^2 R_i}{\partial u^2}\cdot\delta u^2\right|_{\bar{u}} + \cdots$$

Dropping all higher order Terms gives

$$R_i - \bar{R}_i = \left.\frac{\partial R_i}{\partial u}\delta u\right|_{\bar{u}} \quad \text{or}$$

$$\delta R_i = \left.\frac{\partial R_i}{\partial u}\delta u\right|_{\bar{u}}$$

THE PARTIALS ARE

$$\left.\frac{\partial R_i}{\partial u}\right|_{\bar{u}} = \left[\frac{\bar{u}_1 - x_{i1}}{\bar{R}_i - \bar{b}} \quad \frac{\bar{u}_2 - x_{i2}}{\bar{R}_i - \bar{b}} \quad \frac{\bar{u}_3 - x_{i3}}{\bar{R}_i - \bar{b}} \quad 1\right]$$

$$\left[\left.\frac{\partial R_i}{\partial u}\right|_{\bar{u}}\right] \triangleq [h_{ij}] \quad i,j = 1,4$$

THUS,

$$\delta R_{4\times1} = H_{4\times4}\delta U_{4\times1}$$

$$\delta U = H^{-1}\delta R$$

$$U_k = U_{k-1} + \delta U$$

where $U_{k-1} = \bar{U}$

23 In the Taylor Series expansion of range the range estimates, $\bar{R}$, and the position estimates, $\bar{U}$, must be close to U (true position) for convergence to occur. However, in 1975 it was shown that the Hotelling algorithm will cause

$$\delta U = H^{-1}\delta R$$

to converge if $\bar{U}$ is within 6000NM of U!

Hotelling is simply an iterative technique for finding H^{-1}. The algorithm is initialized with G_0, a rough estimate of H^{-1}. Then subsequent (or improved) estimates of H^{-1} are found from

$G_m = G_{m-1}(2I - HG_{m-1})$ $m=1,2,...$

The last fix can be used for $\bar{U}$ and 100 m navigation can be produced with C/A navigation only. This would require only one interation of G_m as long as $\delta U \leq 5$NM.

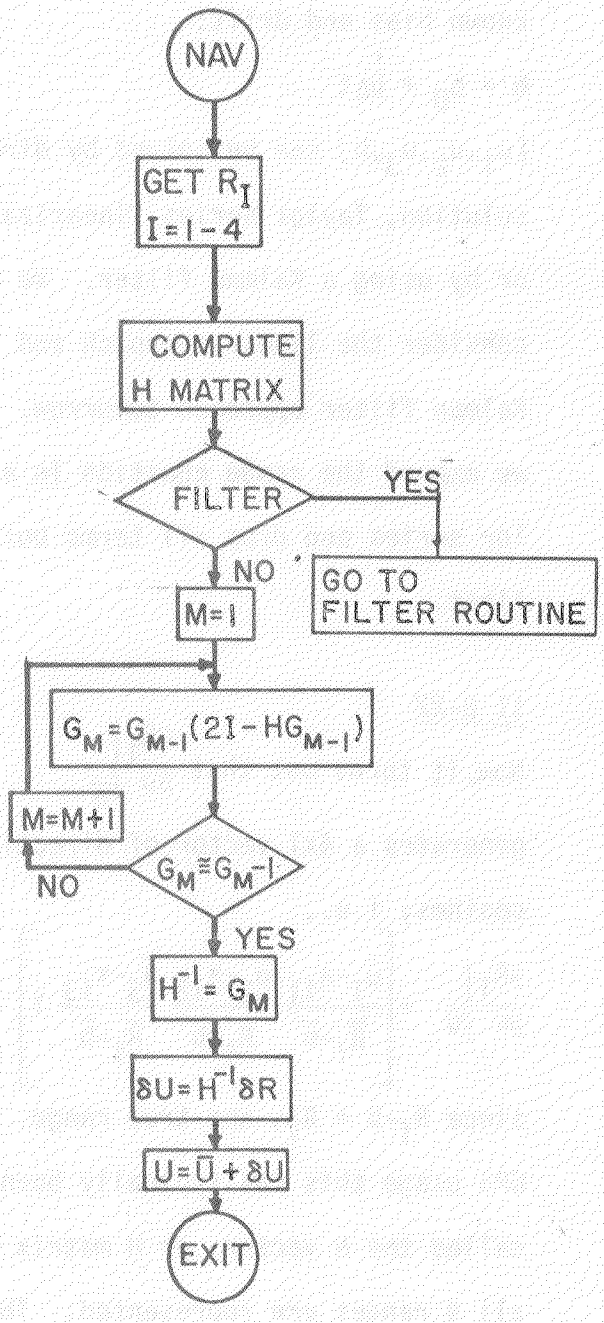

II B-24

24 Navigating with less than 4 satellites is a problem where the direct or linear solution is involved. With a Kalman filter, accuracy becomes a problem with less than 4 satellites. However, a predictable clock coupled with known altitude makes 2 or 3 satellite navigation possible. If b_0 and $\dot{b}$ are known, the clock can be predicted. If altitude is known, range to the center of the earth can be used. $r_c = a/(1+\tilde{e}^2 \sin^2\phi')^{\frac{1}{2}} + h$ where $\tilde{e} = e^2/(1-e^2)$ is the minor eccentricity, a is the earth's semi-major axis, and ϕ is latitude and ϕ' is geocentric latitude.

$$b = b_0 + \dot{b}\,\Delta t$$

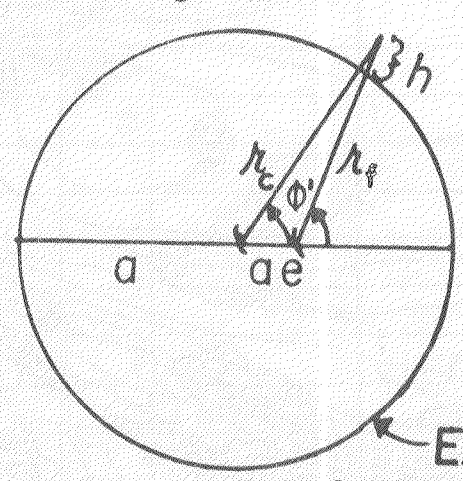

$$r_c = a/(1+\tilde{e}^2 \sin^2\phi')^{\frac{1}{2}} + h$$

II B-25

25 However, the earth is not a true spheroid and at sea level where most ship captains think their altitude, h=0, the true altitude with respect to the spheroid is in the range $-100\text{ m} \leq h \leq 100\text{m}$. For accurate navigation at sea this h-factor must be included.

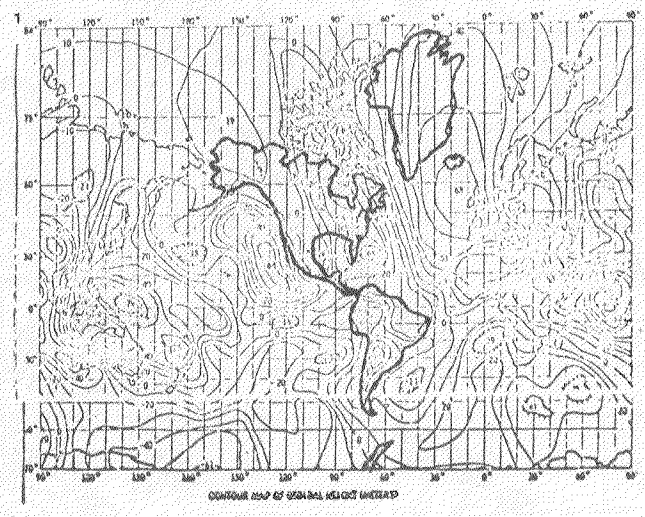

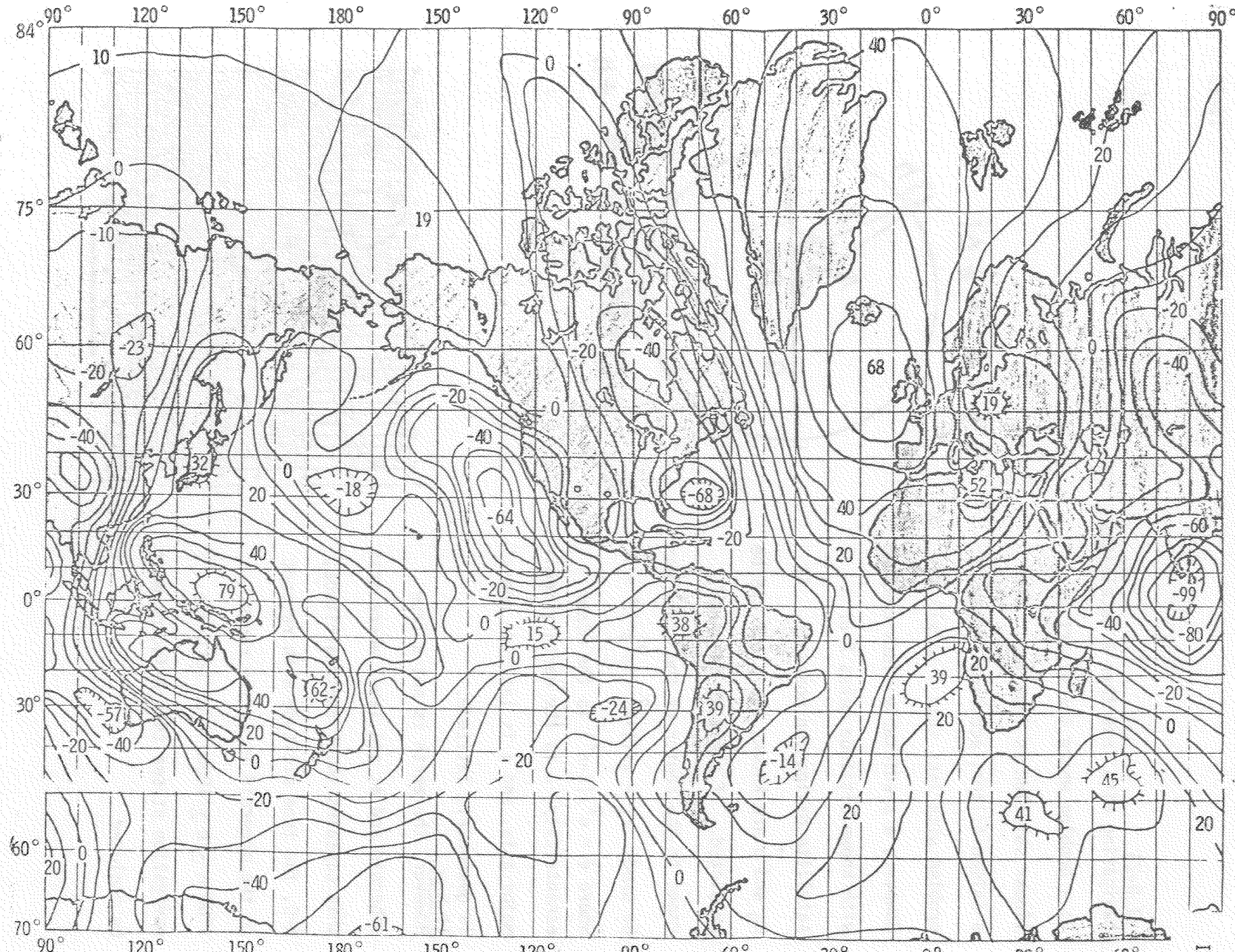

CONTOUR MAP OF GEOIDAL HEIGHT (METERS)

III-15B

II B-26

26 The sequential (single channel) GPS receiver has basically the same problem as the classical celestial navigation problem: LOP's all must be moved to the time of the last LOP. Thus,

$R(t+\Delta t) = R(t) + \dot{R}\Delta t$

is used, where $\dot{R} = \frac{R(t) - R(t-\Delta t)}{\Delta t}$

similarly, the ephemeris is translated as

$X(t+\Delta t) = X(t) + \dot{X}\Delta t$

where $\dot{X}(t) = \frac{X(t) - X(t-\Delta t)}{\Delta t}$

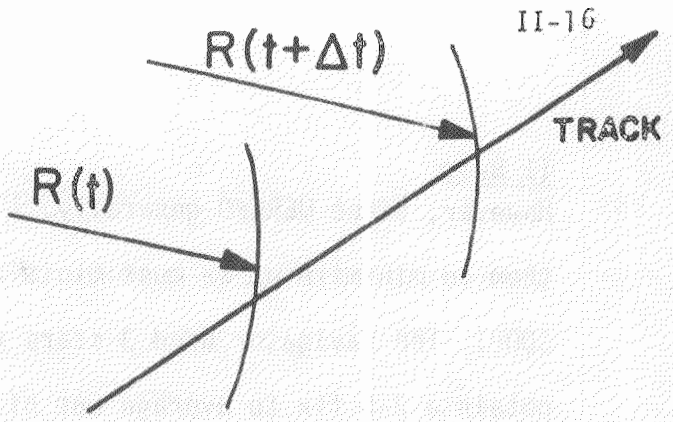

$$R(t+\Delta t) = R(t) + \dot{R}\Delta t$$

$$\dot{R} = \frac{R(t) - R(t-\Delta t)}{\Delta t}$$

$$X(t+\Delta t) = X(t) + \dot{X}\Delta t$$

$$\dot{X} = \frac{X(t) - X(t-\Delta t)}{\Delta t}$$

II B-27

27 Navigation accuracy with GPS can be shown to be

σ_N = UERE * GDOP

where UERE is the User Equivalent Range Error and GDOP is Geometric Dilution of Precision. If there are no range measurement errors; i.e., UERE=0, then σ_N=0 and GDOP does not matter, unless it is infinite and 0*∞ is undefined. In general many parameters contribute to UERE. In the last slide, we saw that even velocity contributes in a sequential receiver. We shall take UERE up in detail later.

$GDOP = \sqrt{tr[H^T H]^{-1}}$

where H is the direction cosine matrix as before.

NAVIGATION ERROR:

$$\sigma_N = UERE * GDOP$$

UERE $\triangleq$ User Equivalent Range Error

GDOP $\triangleq$ Geometric Dilution of Precision

$$GDOP \triangleq \left\{ tr\left[H^T H\right]^{-1} \right\}^{1/2}$$

II B-28

28 However, since UERE≠0 generally, then to minimize σ_N we must minimize GDOP. The navigator used 3 stars to obtain a 2-D fix to average out his errors and compensate for an imperfect clock. He used "best GDOP" in the sense that he tried to pick 3 stars spaced 120° apart. The GDOP equation does the same thing approximately.

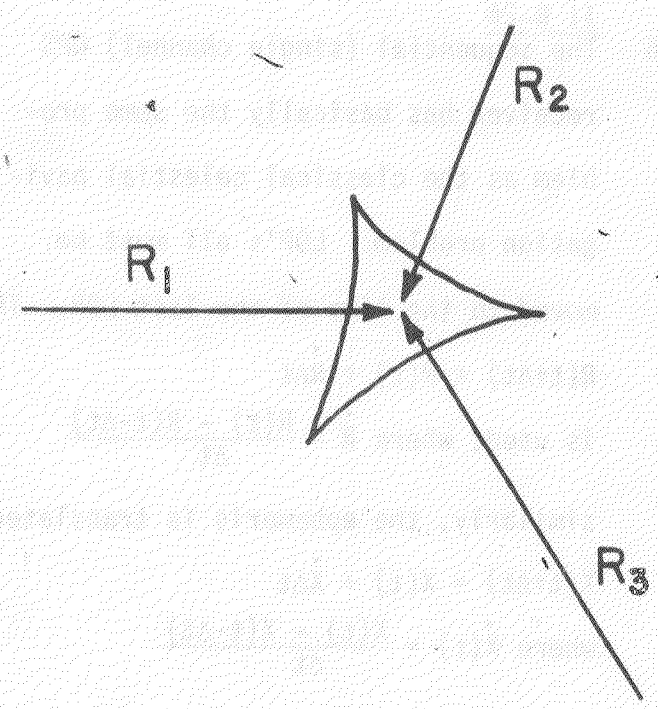

II B-29

29 With GPS we need 4 satellites, however. One must be overhead for best altitude measurement, and ideally the other three should be 120° from the overhead satellite and separated 120°. However, the earth's horizon limits the vertical separation to 90° (atmospheric attenuation further limits it to 85°). With these angles,

$$GDOP_{120} = \sqrt{tr[HH^T]^{-1}} \cong 1.62$$

$$GDOP_{120/90} = \sqrt{tr[HH^T]^{-1}} \cong 1.74$$

$$H_{120} = \begin{bmatrix} \sqrt{3}/2 & 0 & -1/2 & 1 \\ -\sqrt{3}/4 & 3/4 & -1/2 & 1 \\ -\sqrt{3}/4 & -3/4 & -1/2 & 1 \\ 0 & 0 & 1 & 1 \end{bmatrix}$$

$$GDOP_{120} = \{tr[HH^T]^{-1}\}^{1/2} \cong 1.62$$

$$H_{\frac{120}{90}} = \begin{bmatrix} 1 & 0 & 0 & 1 \\ -1/2 & \sqrt{3}/2 & 0 & 1 \\ -1/2 & -\sqrt{3}/2 & 0 & 1 \\ 0 & 0 & 1 & 1 \end{bmatrix}$$

$$GDOP_{\frac{120}{90}} = \{tr[HH^T]^{-1}\}^{1/2} \cong 1.74$$

II B-30

30 The major problem associated with satellite selection is the number of GDOP computations that must be made. Computing $tr[H^TH]^{-1}$ once is not too bad but to find the optimal constellation we must compute

$$\binom{n}{4} = \frac{n!}{(n-4)!4!}$$

different GDOP equations where n is the number of satellites in view. Typically n=8 around the globe and at random time, but $5 \leq n \leq 11$ or even 12 with the shuttle. Arbitrary selection of best overhead satellite cuts this to $\binom{n-1}{3}$ computations.

II B-31

31 Arbitrary selection of the overhead satellite and desire for computational minimization led to the development of arbitrary techniques for satellite selection that provide "good" GDOP. It was observed that an orthogonal system of ontrack, crosstrack, and overhead coupled with the vector resultant set of satellites (OCOR) system ideally has a GDOP=1.67 and require only 4(n-1) computations all of which are simpler than the GDOP equation.

OPTIMAL SATELLITE SELECTION

REQUIRES $\binom{n}{4} = \frac{n!}{(n-4)!4!}$

Computations of $\left\{tr\left[H H^T\right]^{-1}\right\}^{1/2}$

n	$\binom{n}{4}$	$\binom{n-1}{3}$
5	5	4
6	15	10
7	35	20
8	70	35
9	126	56
10	210	84
11	330	120
12	495	165

OCOR IDEAL H-MATRIX

$$H_{OCOR} = \begin{bmatrix} 1 & 0 & 0 & 1 \\ 0 & 1 & 0 & 1 \\ 0 & 0 & 1 & 1 \\ -1/\sqrt{3} & -1/\sqrt{3} & -1/\sqrt{3} & 1 \end{bmatrix}$$

GDOP = 1.67

OCOR COMPUTATIONS

NUMBER	TYPE
1	AXES EQUATIONS
3(n-1)	SELECTION EQUATIONS
1	4th AXIS EQUATION
n-3	4th SATELLITE SELECTION
4(n-1)	TOTAL

II B-32

32 Another advantage of the OCOR system is that ideally the crosstrack and overhead range measurements are not affected by velocity. That is, translation of those two range measurements over some distance, $v\Delta t$, does not change them. Hence in a sequential receiver the error in Ranges, R_0,R_c, is minimized in straight and level flight.

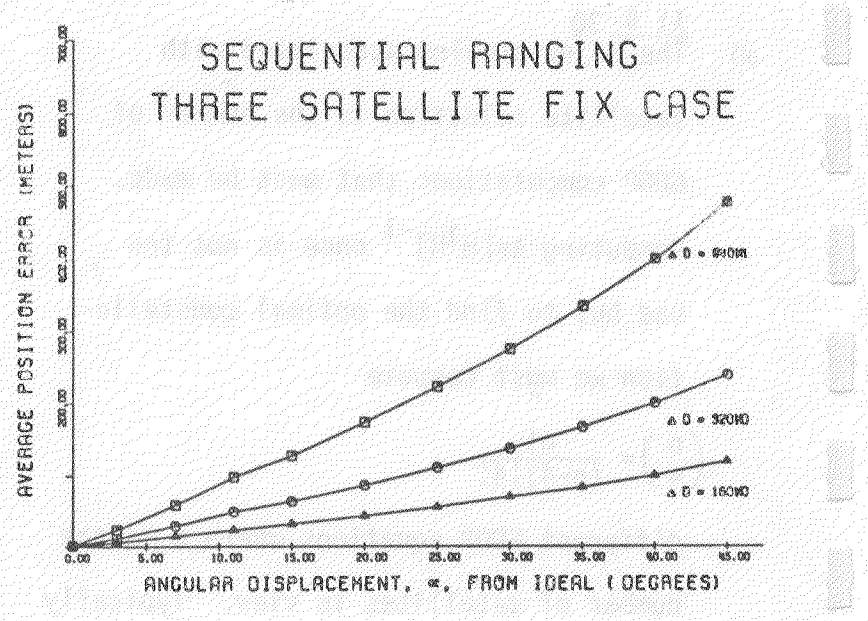

II B-33

33 This table shows a comparison of three different orthogonal systems with the optimal system. The average GDOP on a simulated 6h USAF C5A aircraft flight from California to Hawaii is:

Selection	GDOP
Optimum	2.64
OCOO	2.86
OCOR	2.92

where the ENOO is the East North, Overhead and Optimal, and OCOO is Ontrack, Crosstrack, Overhead and Optimal.

SATELLITE SELECTION PROCEDURE
EXECUTION TIMES (IN MS) USING PDP 11/40 COMPUTER

SAT SELECT. PROCED.	GDOP	SAT. SEL. OR AXES EQUATION	DIR. COS. EQUATION	TOTAL TIME N= 8	EXEC. TIME WRT OPTIM. N=8	AVG. GDOP
OPTIMUM	$63\binom{N}{4}$	0	____	4410	1	2.64
E.N.U.O.	63(N-3)	7.1·3·(N-1)	____	463	1/9	____
O.C.O.O.	63(N-3)	3(84)(N-1)	8.37	341	1/13	2.86
O.C.O.R.	0	4(84)(N-1)	10.924	33	1/134	2.92

II B-34

34 The navigation error, σ_N, was shown earlier to be σ_N=UERE*GDOP. Maximum values of UERE can be specified if a maximum allowable σ_N is known. Receiver design directly determines UERE and (for the most part) is directly under the designer's control.

SINCE σ_N = UERE * GDOP, MAXIMUM VALUES OF UERE CAN BE FOUND FOR SPECIFIC σ_N:

	UERE (m)		
σ_N(m)	Opt.	OCOO	OCOR
10	3.79	3.5	3.42
50	18.94	17.5	17.1
75	28.4	26.2	25.7
100	37.9	35.0	34.2

UERE PARAMETERS (m)

II C-34

34 The UERE parameters consist of satellite errors, receiver errors, and propagation errors. Each of these errors is broken down into their component parts. The Phase III ephemeris model is assumed and both P and C/A code errors are given. With the previous values of GDOP given, σ_N would range from 10.34 m. to 11.39 m. with the differing selection algorithms and P code measurement. With the C/A code σ_N would range from 31.9 m. to 35.5 m.

SATELLITE ERRORS	PHASE III
EPHEMERIS (σ_E)	1.5 m
GROUP DELAY & CLOCK (σ_G)	0.9 m
RECEIVER ERRORS	
MEASUREMENT NOISE (σ_M)	
P - CODE	1.05 m
C/A CODE	10.5 m
QUANTIZATION ERROR (σ_Q)	
P - CODE	0.266 m
C/A CODE	2.66 m
COMPUTATION ERROR (σ_C)	1.0 m
PROPAGATION ERRORS	
IONOSPHERIC (σ_I)	
L_1 & L_2	$3.0\sigma_{I1}$
L_1 only	$5.0 \sec\theta$ *
TROPOSPHERIC (σ_T)	0.1 m
MULTIPATH (σ_{MP})	1.0-3.0 m

UERE = $(\sum \sigma_A^2)^{1/2}$ = 3.9 m_p, 12.1 m C/A

* θ IS ELEVATION ANGLE

II C-36

36 The alamanac (DB III) provides ephemeris accuracy as shown, where UERE is the User Equivalent Range Error. The Nav Error (NE) is

$$NE = UERE \cdot GDOP \quad (1\sigma).$$

Also, ionospheric modeling and corrections can be handled in many ways with single channel receivers. σ_M and σ_Q will be further discussed in RF front end design. σ_C appears to provide a minimal limit to NE; i.e., NE = UERE*GDOP+σ_C. This is contrary to accepted definition but agrees with experimental results.

Almanac Ephemeris Representation Performance

Time Past Initial Transmission	Estimated UERE (Meters)
1 day	1,000
1 week	2,500
2 weeks	5,000
3 weeks	10,000
4 weeks	15,000
5 weeks	20,000

II C-37

37 Calculation error, σ_C, is a major parameter affecting processor memory cost and computation time as well as navigation error, σ_N. Double precision (56 bits) noise-free results indicate errors on the order of 10^{-6}m. Conflicting results for single precision navigation simulations prompted these results. It is apparent that double precision (56 bits) is not needed for most applications, but 32 bits is probably sufficient. σ_E is shown separately to illustrate the affect on satellite positions.

σ_C: CALCULATION ERROR (m)
"NOISE FREE"

	No. of Bits Precision						
	56	32	30	28	26	24	22
σ_C	10^{-6}	02	.08	.3	1.2	4.9	19.5
σ_E	10^{-6}	.03	.125	.5	2.0	8.0	32.0
σ_N	10^{-6}	.04	.15	.59	2.3	9.4	37.0

II C- 38

38 Considerable effort has been made to determine the cost/perfomance tradeoffs associated with various microprocessors for use with a GPS Receiver. This table shows the results of designing a FPP for currently available μPs. Complete simulations have been run for the 8080 (10 sec) and AM 9511 (0.8 sec).

Additional analysis has been made on the latest μPs: the Z 8000, Intel 8086, and Motorola 68000. Although a full FPP analysis has not been made, the instruction set, speed, and memory addressing capabilities indicate that all of these machines will produce fix rates of 1 sec. or less.

	FAD	FSUB	FMUL	FDIV	Bytes of Memory	Est. Fix Rate (Sec.)
8080	1.34	1.71	5.13	7.57	811	10
MC6800	.27	.34	1.5	22	900	3.05
8080A	.41	.44	1.9	3.6	528	3.55
Z80A	.18	.19	.78	1.5	434	2.09
9900	.23	.25	.35	.26	390	1.55
Bit Slice Emulator	.05-.03	.05-.08	.2-.4	.4-.7	one of the above	1.11-2.00
AM9511 with DMA	0.184*	0.185*	0.084*	0.092*	none	0.8
LSI 11	.07	.07	.11	.15	—	1.2

* Worst case excution times

Microprocessor Performance Comparison (in m.sec.)

II C-39

39 The software requirements for the navigation functions are shown here. If a hardware FPP such as the AM-9511 is used, about 3600 bytes of housekeeping software can be eliminated.

	ROUTINES	FORTRAN (LINES)	MEMORY (BYTES)	RATIO
1.	FUNDAMENTAL DRIVER	77	980	12.7
2.	NAVIGATION EQUATIONS	55	637	11.6
3.	SATELLITE GENERATION	102	1425	14.0
4.	SATELLITE SELECTION	63	600	9.5
5.	COORDINATE CONVERSION ($\lambda,\phi,h \rightarrow x,y,z$) only	24	439	18.3
6.	HOUSEKEEPING (I/O, MATRIX OPERATIONS, etc)	313	5258	16.8
	TOTAL	634	9339	AVG: 14.7

8080 SOFTWARE MEMORY REQUIREMENTS

II C-40

40 The computation time for the routine navigation functions average about 1/2 sec/fix in a processor that performs at a 1 fix/sec rate. However, when satellite selection is required nearly 1 sec. is needed. Similarly, when data collection is required 30 sec. or more is needed. To insure regular interval fixing foreground/background operations are required.

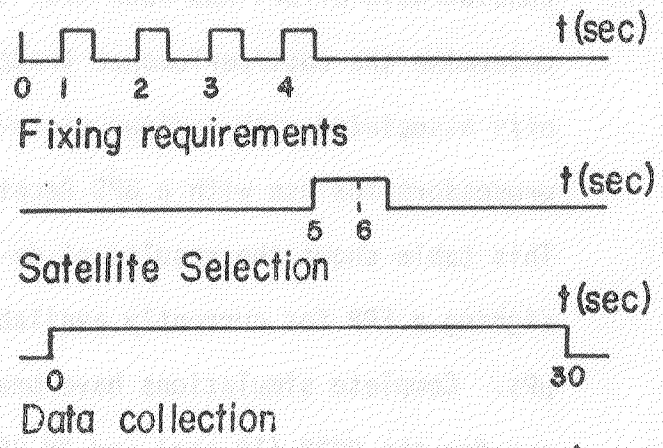

II C-41

41 Performance of a simulated single channel GPS receiver is shown here with and without a filter on the navigation position. The results were obtained for a simulated 600 MPH Aircraft on a 6h mission with varying values of range measurement error $0 \leq \sigma_R \leq 35$ m.

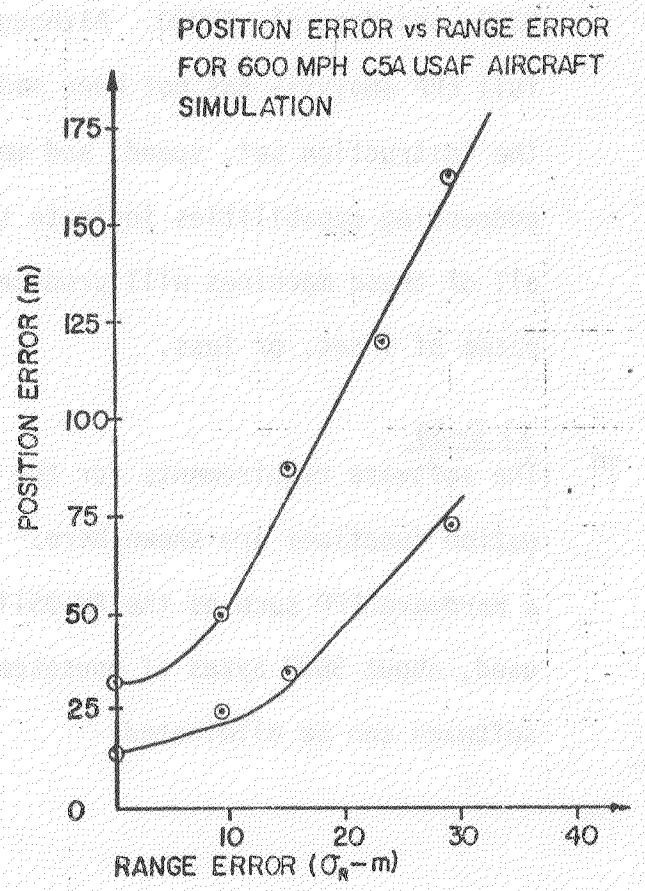

II C-42

42 If one of the full mission σ_N values is shown for one of the average σ_N points on the previous slide it appears as a very noisy function of time over the full 6h flight. The error shown is approximately σ_C with 24 bit precision. Only occasional noise spikes take the error out of the computation error region since σ_R=5 ft. was used in this run.

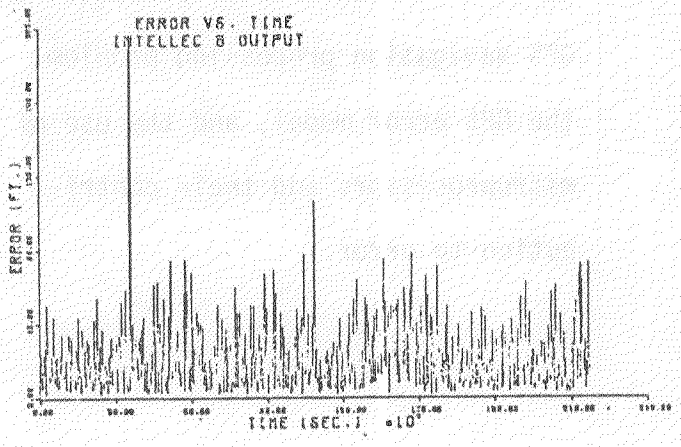

II C-43

43 The filter used here is the simple 2-pole "α-β" filter. This will be shown in Sec. III. to be equivalent to a 2-pole Kalman Filter.

$$\hat{X}(k) = \hat{X}(k-1) + T\hat{V}(k-1) + \alpha\varepsilon_k$$

$$\hat{V}(k) = \hat{V}(k-1) + \beta(\varepsilon_k/T)$$

where

$$\varepsilon_k = X(k) + N(k) - \hat{X}(k-1) - T\hat{V}(k-1)$$

with X(k) the true data and N(k) noise

II C-44

44 In this session we have presented the GPS Navigation processing problem, the GPS error model, and the use of microprocessors and their contribution to error.

GPS NAVIGATION PROCESSING

* DATA SELECTION
* RANGE MEASUREMENT
* EPHEMERIS COMPUTATION
* SATELLITE SELECTION
* SEQUENTIAL NAVIGATION

GPS ERROR MODEL

* SATELLITE ERRORS
* RECEIVER ERRORS
* PROPAGATION ERRORS

MICROPROCESSOR USAGE

* COST/COMPUTATION ERROR
* SPEED
* TIME SLICING

GENERAL BLOCK DIAGRAM - SINGLE CHANNEL C/A RECEIVER

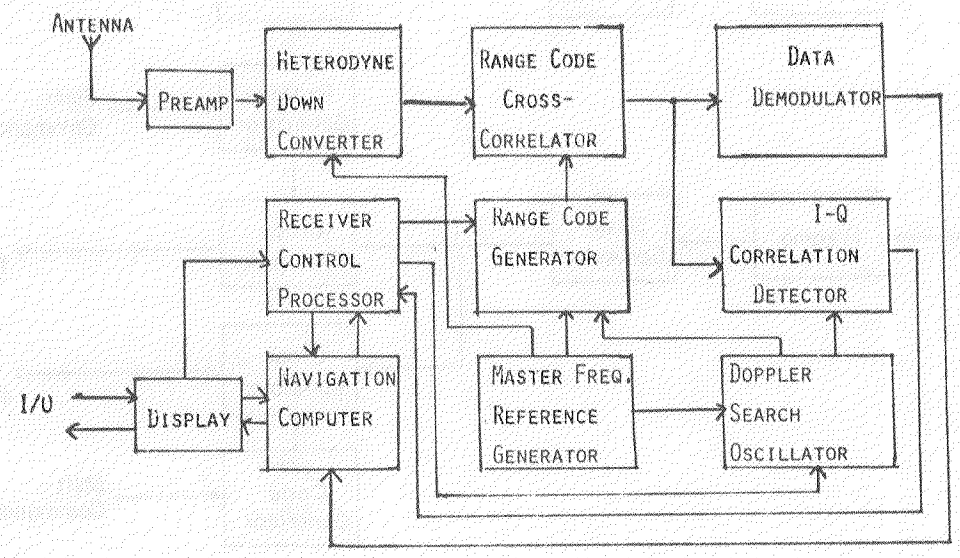

Figure III -1

The fundamental elements of a single channel receiver for clear access signal.

To add P-code requires multiple correlators and code generators.

To add L2 requires multiple down convertors.

To continuously track four satellites requires multiple receivers, except for preamp, I/O display, and computer.

RECEIVER FRONT END FOR L1/L2 RECEPTION

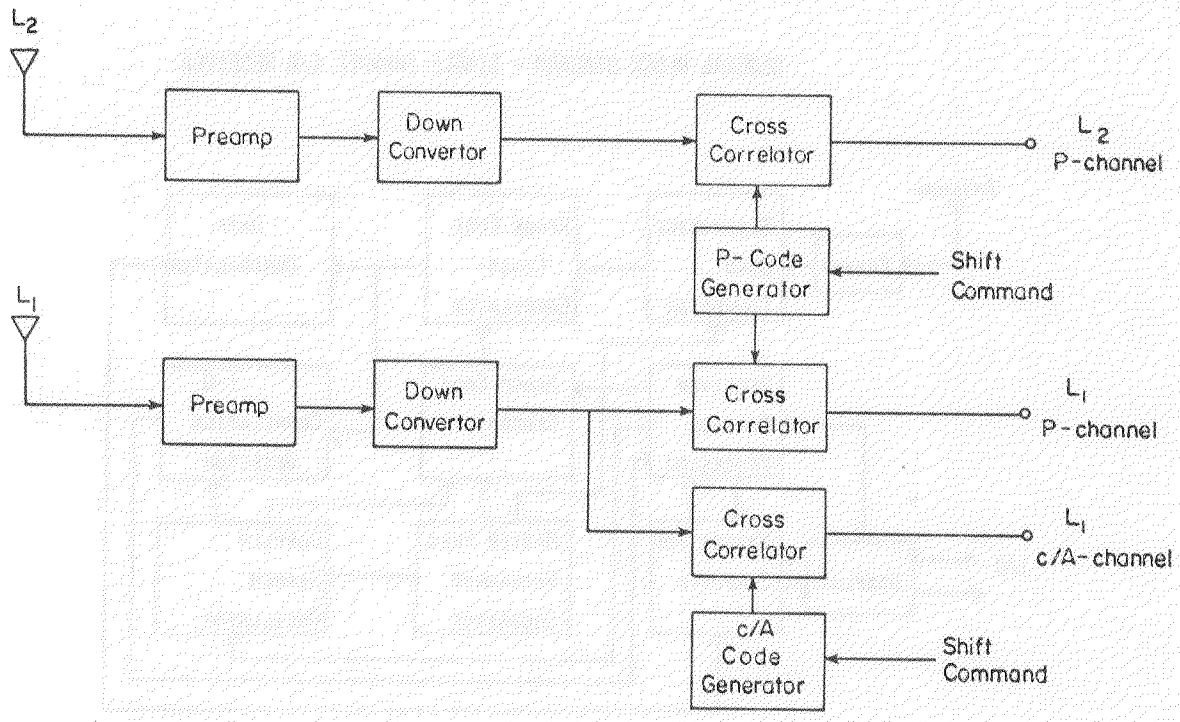

Figure III - 2

Reception of both L1 and L2 channel signals employs multiple r.f. front ends for the receiver. The L1 and L2 signal carriers are down-converted to appropriate i.f. frequencies for further signal processing. For L2, P-code correlation is employed. For L1, both P-code and C/A-code correlation may be employed.

RECEIVED SIGNAL/NOISE ANALYSIS

1.	Transmitter Power 20 watts (radiated)	13.0	dBW
2.	Transmitter Circuit Loss	-0-	dB
3.	Transmitter Antenna Gain	13.7	dB
4.	Transmitter Antenna Pointing Loss	-0-	dB
5.	Space Loss f = 1575.4 Mhz., R = 25824 km.	-184.6	dB
6.	Antenna Polarization Loss	-1.4	dB
7.	Receiving Antenna Gain	-2.0	dB
8.	Receiving Antenna Pointing Loss	-0-	dB
9.	Receiving Circuit Loss	-1.0	dB
10.	Net Link Loss (Add 2 through 9)	-175.3	dB
11.	Total Received Power (add 1 plus 10)	-162.3	dBW
12.	Receiver Noise Spectral Density T = 625 K F = 5 dB	-200.7	dBW/Hz.
13.	Received Signal/NSD (11 minus 12)	+38.4	dB Hz.

Figure III - 3

At the L1 frequency, the available ratio of received signal power to white noise spectral density is approximately 38.4 dB•Hz. for the C/A signal, using a receiver with 5 dB noise figure and an omni-directional antenna with -2.0 dB gain. This is a worst case figure for maximum satellite-to-user range.

GPS SIGNAL COMBINING

DATA $\{0,1\}$: $D(t)$ $\{+1, -1\}$

CODE $\{0,1\}$: $c(t)$ $\{+1, -1\}$

DATA ⊕ CODE : $D(t) \bullet c(t)$

L_1 SIGNAL:

$$s(t) = A\, D(t) \left[c_P(t) \cos \omega_{L1} t + c_{C/A}(t) \sin \omega_{L1} t \right]$$

Figure III - 4

Digital/Analog Correspondence--

Digital Zero ↔ Analog One
Digital One ↔ Analog Minus One
Modulo-2 Addition ↔ Analog Multiplication

Code Modulo-2 Data is same as code waveform (± 1) times data waveform (± 1).

Phase-shift keying (90°) is same as multiplying code data waveform times sine wave carrier waveform.

DIGITAL-ANALOG EQUIVALENCE

DATA DIGITS				DATA WAVEFORM		
A	B	A ⊕ B		A(t)	B(t)	A(t)•B(t)
0	0	0		1	1	1
1	0	1		-1	1	-1
0	1	1		1	-1	-1
1	1	0		-1	-1	1

0 ⟷ 1

1 ⟷ -1

Figure III - 5

Although the PN-code is generated in the 0,1 alphabet, it appears as an analog waveform in the +1,-1 alphabet. Under the given transformation between digits and waveforms, digital modulo-2 addition (exclusive or) corresponds to analog multiplication. This correspondence is an aid in understanding the correlation properties of PN-codes.

GPS CODE STRUCTURE

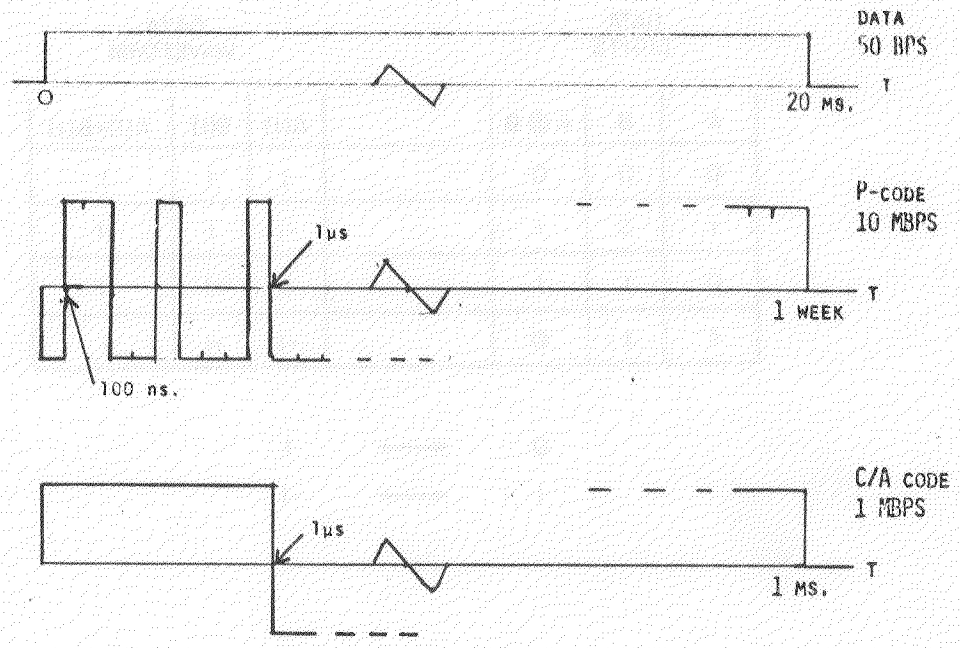

Figure III - 6

GPS Digital Signals-

1. 50 bit per second data link, Data is modulo-2 added to ranging code. Data bit duration is 20 milliseconds.

2. Clear access ranging code. (C/A). A 1 (one) Megabit per second linear shift register pseudo-noise (PN) code (Gold Code). Code repeats every 1 millisecond, giving unambiguous ranging over 300 km. distance.

3. Protected ranging code(P). A 10 (ten) Megabit per second Gold Code, which repeats every week.

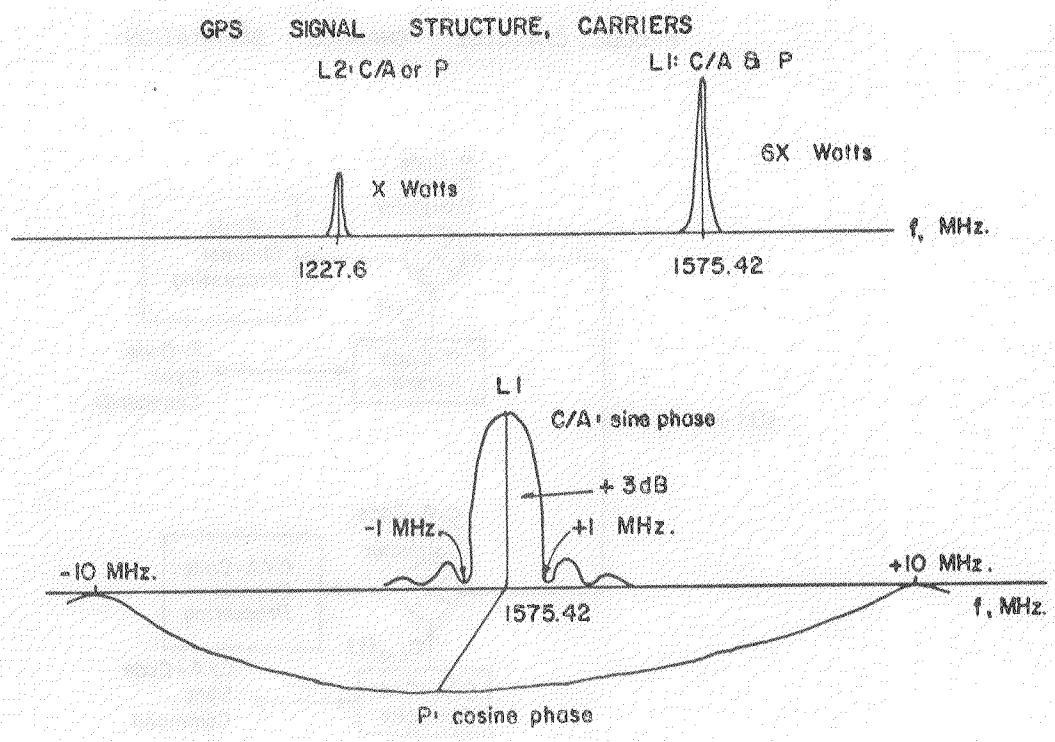

Figure III - 7

L_1 signal: 1575.42 MHz.
The C/A and P codes are present simultaneously as Phase-Shift Keying (± 90°) on carriers which are separated 90° in phase. The C/A carrier has 3 dB more power than the P-carrier.

L2 signal: 1227.6 MHz.
Either C/A or P, but not both simultaneously. L2 power is -9dB from L1 power.

P-CODE, C/A-CODE CHANNEL SEPARATION

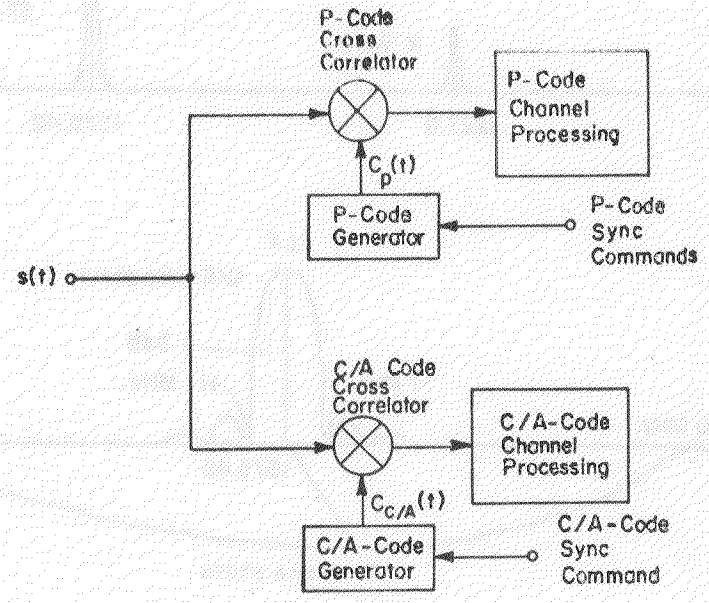

Figure III - 8

The P-code and C/A-code channels may be separated by multiplication (or cross-correlation) with their respective codes. This is possible because:

1. $C^2(t) = 1$
2. For $C_1(t) \neq C_2(t)$, $C_1(t) \times C_2(t)$ produces a product signal whose spectrum is as wide as the sum of the bandwidths of $C_1(t)$ and $C_2(t)$ (white noise).

The main problem is in synchronizing the receiver code generators.

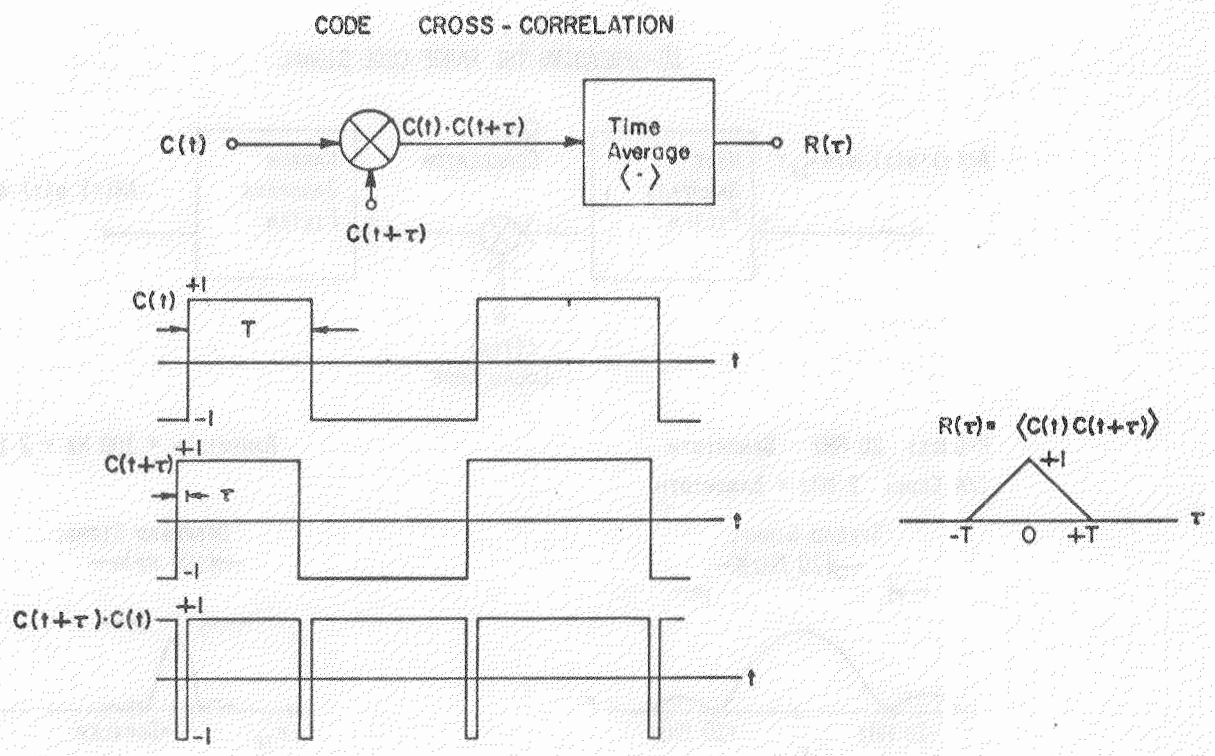

Figure III - 9

A waveform multiplied by a time-displaced version of itself, and then time averaged, produces a function of displacement called Auto-correlation Function.

For a square-wave PN code, the autocorrelation function, R(T), has appreciable value only for values of displacement less than 1 bit.

A PN autocorrelation function is triangular over two bits and almost zero elsewhere.

DE-SPREADING THE RANGE CODE SIGNAL

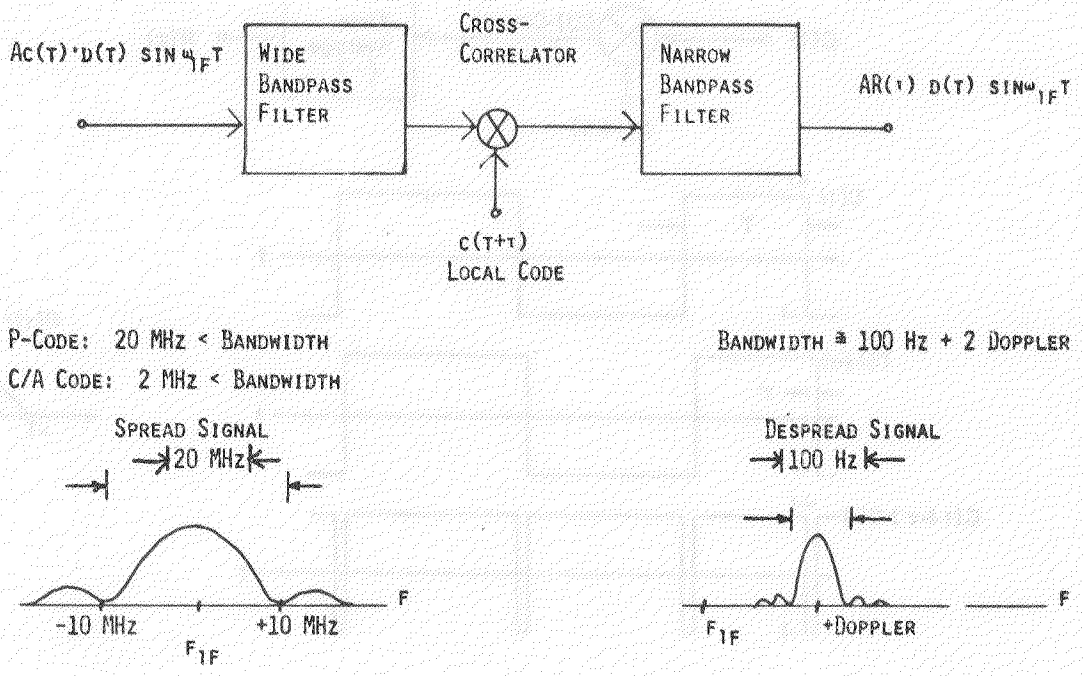

Figure III - 10

Cross-correlation of the local code with the received signal "de-spreads" it, leaving only the narrow-band data-link signal (50 BPS).

The amplitude of the data-link signal is proportional to R(T), the "degree" of cross-correlation between local and received ranging codes.

De-spreading is a fundamental part of making a range measurement or of recovering the data bits.

FREQUENCY SPREADING EFFECT OF TIME MULTIPLICATION

$s_1(t) * s_2(t) \longleftrightarrow S_1(f) * S_2(f)$

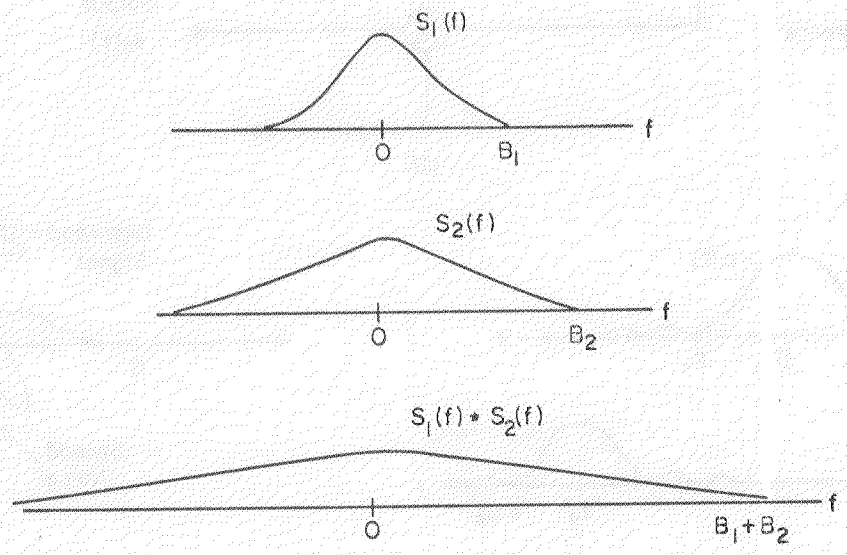

Figure III - 11

A well known property of Fourier Transforms says that multiplication of two time domain waveforms corresponds to the convolution of their corresponding frequency spectra. This property is useful in analyzing systems which employ the correlation processing of signals, since correlation multiplies one signal by another.

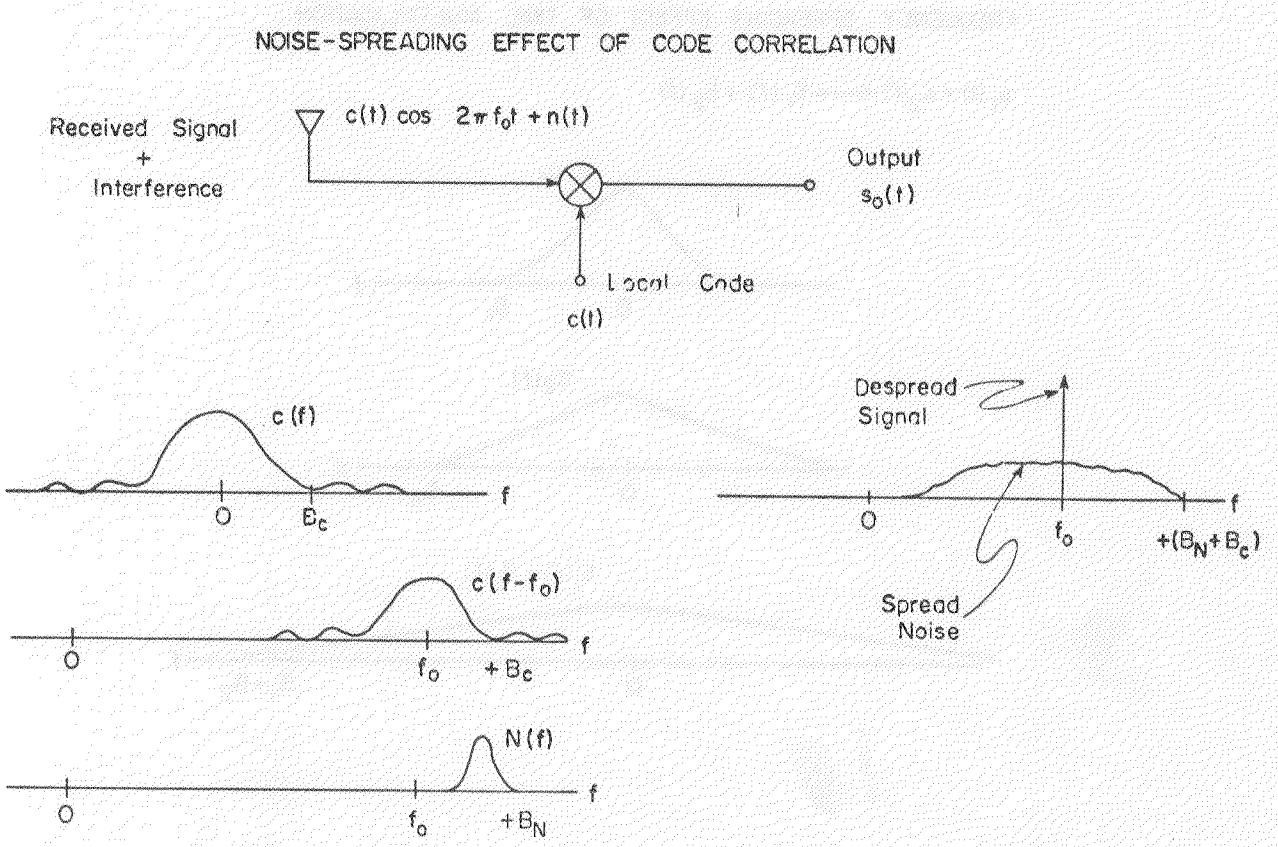

Figure III - 12

Cross-correlation of a PN-code with a code-bearing carrier plus noise removes the code from the carrier and spreads the noise spectrum. The resulting "white" noise spectral width is wider than either the original noise or code spectra. It is this behavior that gives the GPS its immunity to jamming.

GPS SATELLITE SELF-INTERFERENCE

RECEIVED SIGNAL POWER LEVEL	:	$P = -162.3$ DB WATT
SPREADING BANDWIDTH	:	$B = 4$ MHz. $= 66$ DBHz.
INTERFERENCE DENSITY	:	$\frac{P}{B} = -228.3$ DB WATT/Hz.

EACH GPS SATELLITE CONTRIBUTES APPROXIMATELY 1° KELVIN NOISE TEMPERATURE

(BOLTZMANN'S CONSTANT = - 228.6 DB WATTS/Hz./ °KELVIN)

Figure III - 13

Because all GPS satellite signals reside at the same frequency, they interfere with each other. In the receiver, an interfering 2 MHz-wide GPS signal is spread into a 4 MHz-wide "white noise". The strength of the white spectral density is equivalent to a noise temperature of about 1 degree, Kelvin. Thus, if 8 satellites are visible to the receiver, the 7 interfering satellites contribute about 7 degrees Kelvin to the system noise temperature, which is an insignificant contribution.

THE COSTAS LOOP

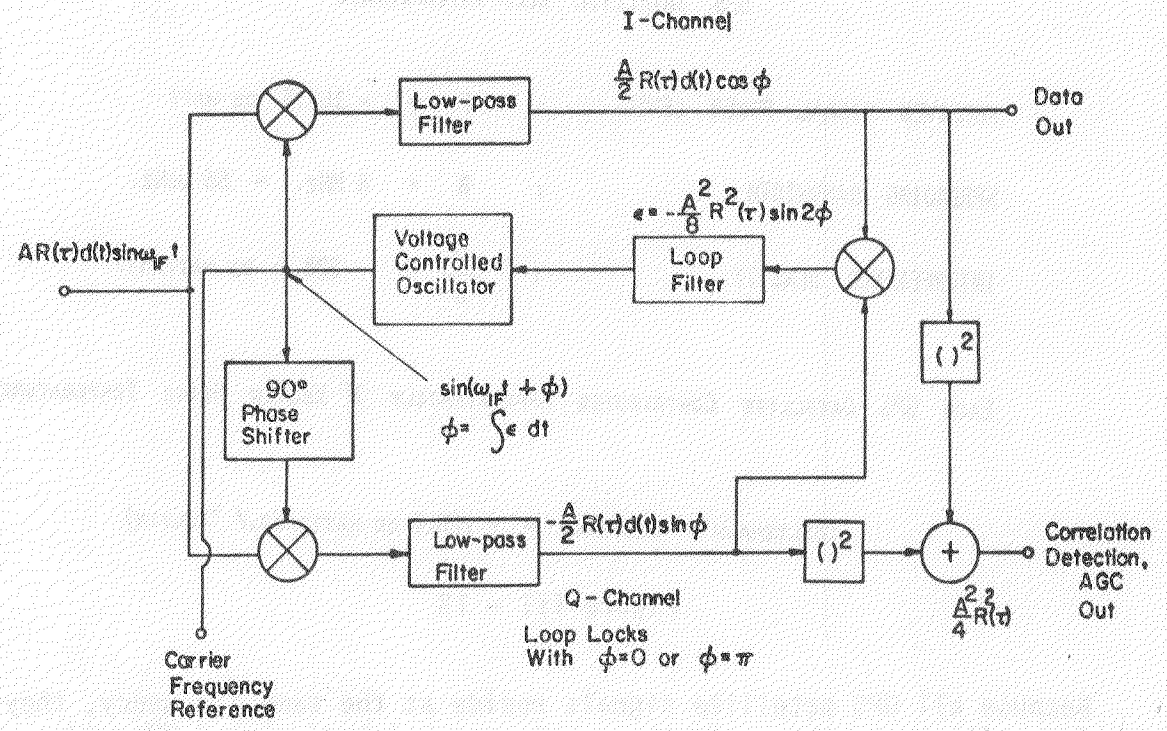

Figure III - 14

The Costas Loop is one of several ways to demodulate the data link signal and recover the data bits.

The Loop also provides a frequency reference sinusoid which is "phase-locked" to the received signal carrier sinusoid. The Loop has the same linearized phase transfer function as a standard phase-locked loop. The 180° loop phase ambiguity causes data ambiguity.

The Loop can be used to sense degree of code correlation (R(T)) and to produce Automatic Gain Control (AGC) signals ($A^2/4$).

Note that R(T) should be maximum (+1) and signal amplitude, A, should be controlled, since the loop error voltage, ε, is a function of both.

ALTERNATIVE RANGING TECHNIQUES

1. Coherent Phase-Tracking
   - Costas Loop based -
   - Early/Late correlators to maximize R(T) -
   - Also produces data bits -

2. Incoherent I-Q Processing
   - Carrier Phase Insensitive -
   - Destroys Data Bits -
   - Loses 6 - 9 dB Signal/Noise Ratio -
   - Faster than Coherent:No Lock Time

3. Common Features
   - Search Doppler Uncertainty First -
   - Search Delay Uncertainty Second -

Figure III - 15

A range measurement is made by "estimating" the local code shift which corresponds to the center of the R(T) curve. The estimation technique is the "heart" of the receiver design.

For multi-channel receivers, Costas Loops may be used to continuously track satellites. For single-channel, or two-channel receivers, it may be desirable to have a faster, incoherent, non-tracking range estimator. These lose signal to noise ratio but do not have to wait for loops to lock. Code search steps in the order of a few milli-seconds instead of hundreds of ms.

COHERENT RANGE ESTIMATION WITH DATA

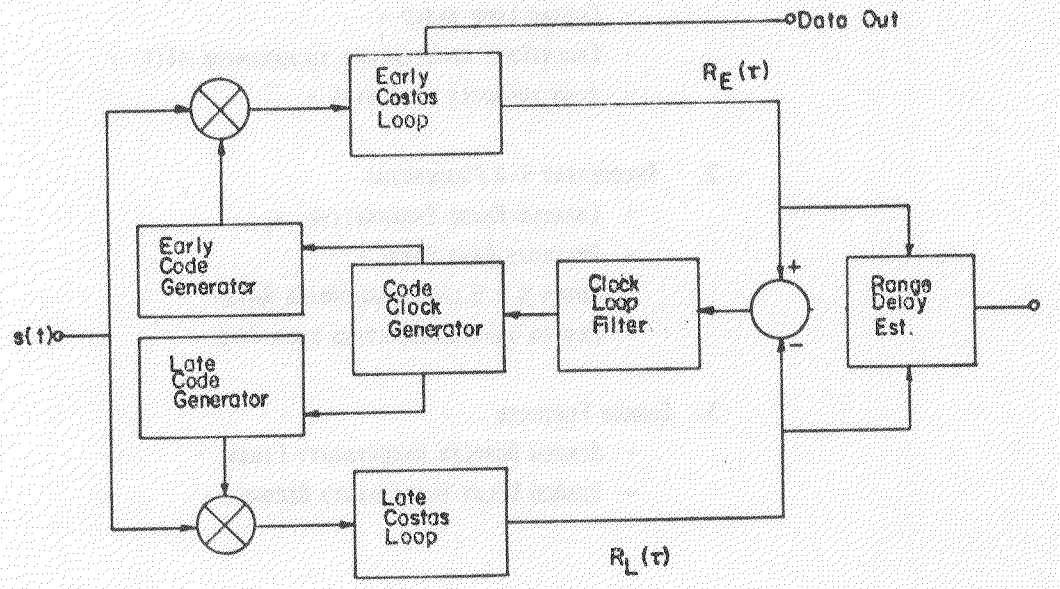

Figure III - 16

A Costas Loop is really a tracking device for carrier phase. By using two Costas Loops, preceded by code cross-correlators whose code references are different by a fraction of a bit (a few degrees of clock phase), an "outer loop" may be locked to the clock phase. The error signal for the outer clock loop is obtained by differencing the "early" and "late" versions of the correlation function, R(T). These two versions may also be used to estimate the center of the "true" R(T).

The scheme produces ranging plus data.

OPERATION OF "EARLY-LATE" CLOCK LOOP

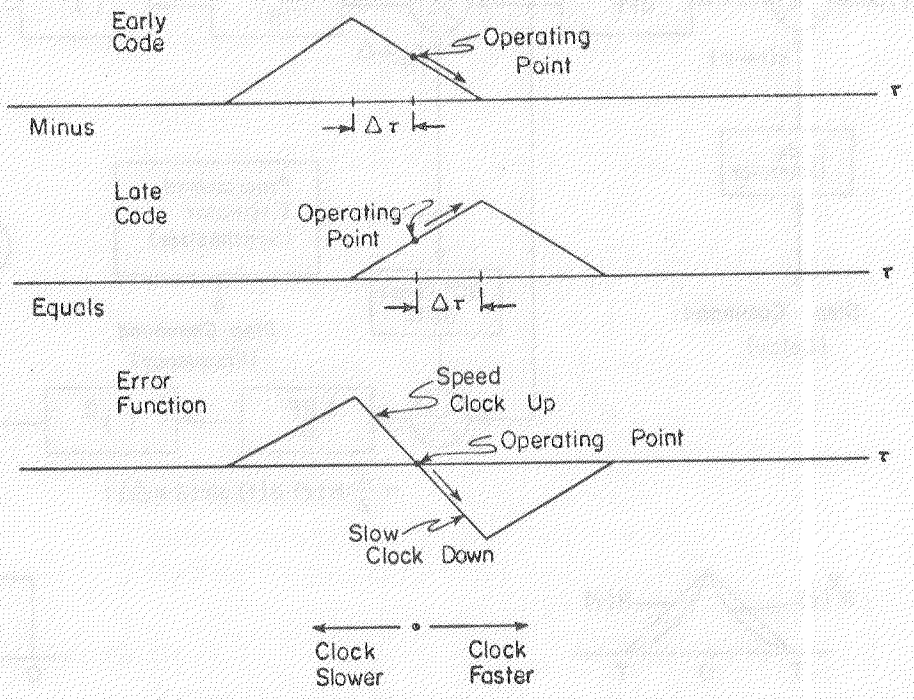

Figure III - 17

Suppose the "Early" and " Late" Code Generators are separated from each other in delay by $2\Delta\tau$. Suppose that the Early Code Generator is advanced with respect to the received code by $\Delta\tau$. Then the output of the Early Code Correlator is to the right of the peak of the autocorrelation function triangle. The Late Code Generator, then, must be retarded with respect to the received code by an amount $\Delta\tau$. Thus, the output of the Late Code Correlator is to thc left of the peak of the autocorrelation function triangle. As the net delay of the offset code generators is retarded or advanced with respect to the received code, the difference of the Code Correlator outputs traces out an error function. As the code generators lag, the error becomes positive. As the generators lead, the error becomes negative. The error may be used to control the frequency of the Code Clock Generator to lock the system at zero error.

CORRELATION DETECTION WITHOUT DATA

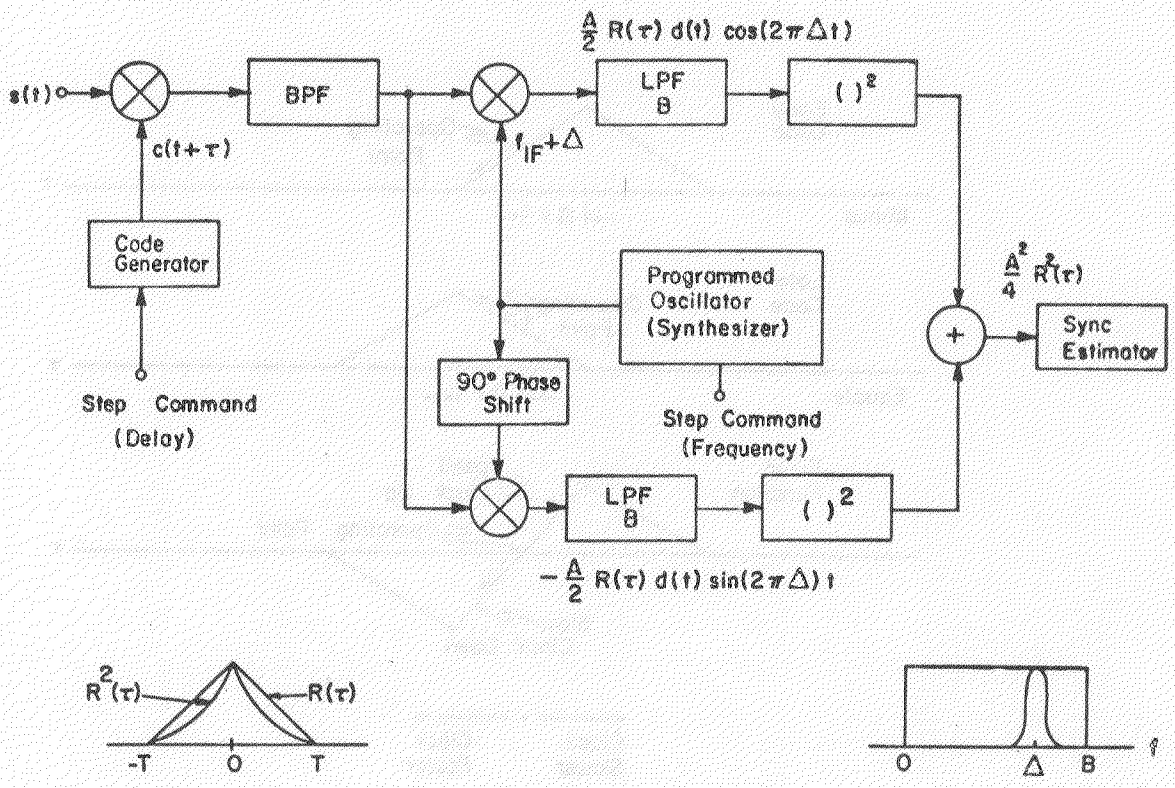

Figure III - 18

If data is not required, a much simpler incoherent range estimator may be used. Here, a commanded oscillator (synthesizer) searches through Doppler "bins" of width B Hz., which may be much larger than the bandwidth of a Costas Loop. For each frequency setting, the code generator steps through the delay uncertainty bin. When an output occurs, it traces out the $R^2(T)$ curve (plus noise) from which is estimated the true center (range) delay.

This method trades speed in delay search for speed in Doppler Search.

DESIGN EXAMPLE
SEQUENTIAL, C/A CODE, INCOHERENT RANGING

DOPPLER SEARCH--

VELOCITY UNCERTAINTY: σ_V = 10.5 M/SEC.

DOPPLER SEARCH RANGE ($\pm 4\sigma_V$) : 84 M/SEC.

FILTER BANDWIDTH/RISE TIME: 440 Hz/2.27 MS.

DELAY SEARCH--

POSTION UNCERTAINTY: σ_X = 75 METERS

DELAY SEARCH RANGE ($\pm 4\sigma_X$) : 600 METERS

DELAY QUANTIZATION: 32 STEPS/BIT, 9.4 METERS

NUMBER OF STEPS: $\frac{32 \times 600}{293}$ = 66 STEPS

STEP DWELL TIME (3 RISE-TIMES): 6.8 MS.

SEARCH TIME/SATELLITE : 66 x .068 = 0.45 S.

FIX TIME (4 SATELLITES) : 4 x 0.45 = 1.8 S.

FILTER SNR---

CARRIER TO NOISE DENSITY : C/N_0 = 38.4 dB Hz.

SQUARING LOSS : 6 dB.

HALF-CORRELATION LOSS (± 150 METERS) : 6 dB.

THRESHOLDING LOSS : 3 dB.

EFFECTIVE C/N_0 : 23.4 dB.

FITLER SNR : -3 dB.

Figure III - 19

Here is an example typical of a single-channel, sequential, C/A, incoherent ranging calculation.

The navigation system yields an assumed velocity prediction uncertainty of 10.5 meters/second, standard deviation. We elect to search ±4 times this standard deviation in Doppler about the carrier center frequency, which yields a region 440 Hz. wide. We compute an SNR of -3dB in a 440 Hz. bandwidth. Thus, one frequency search setting is sufficient.

The navigation system yields an assumed position prediction uncertainty of 75 meters, standard deviation. We search ±4 times this deviation in range code delay about the predicted delay, which yields a region 600 meters wide. For a -3dB SNR we choose to process 18 independent samples having correlations greater than 50%. This yields a delay step quantization of 32 steps/bit for 66 total correlation trials in 600 meters.

With a trial dwell time of three rise times of the 440 Hz. filter, the search time per satellite is 0.45 seconds or 1.8 seconds to sequence through 4 satellites.

MEASUREMENT AND COMPUTATIONAL ERROR SOURCES

SOURCE	TYPE	MAGNITUDE
SATELLITE EPHEMERIS AND CLOCK	RANDOM	1.85 M.; 2-HRS OLD
		11.0 M.; 24-HRS OLD
RECEIVER RANGE ESTIMATOR	RANDOM	0.8-10.0 METERS
IONOSPHERIC	BIAS	12-26 M.; L1 ONLY
		1-14 M.; L1/L2 EST.
		1-3 M.; L1 EST.
TROPOSPHERIC	BIAS	1-15 METERS
COMPUTATIONAL ROUND-OFF	RANDOM	8.0 M.; 24-BIT MANTISSA
		0.03 M.; 32-BIT MANTISSA

Figure III - 20

The chief contributors to position error are shown. Satellite ephemeris and clock error vary between 1.85 and 11 meters, depending on the elapsed time since the satellite was reloaded. The receiver range estimator error can be any where from 0.8 to 10 meters depending upon design. The Ionosphere and Troposphere contribute bias errors (lengthening) of the range measurement, depending on satellite elevation angle. The error can be reduced by using the L1/L2 frequency correction or special estimation techniques, for L1 only. Computational roundoff can be made negligible by using a 32-bit mantissa in the floating point navigation processor.

LOW ANGLE IONESPHERIC TRAVERSE

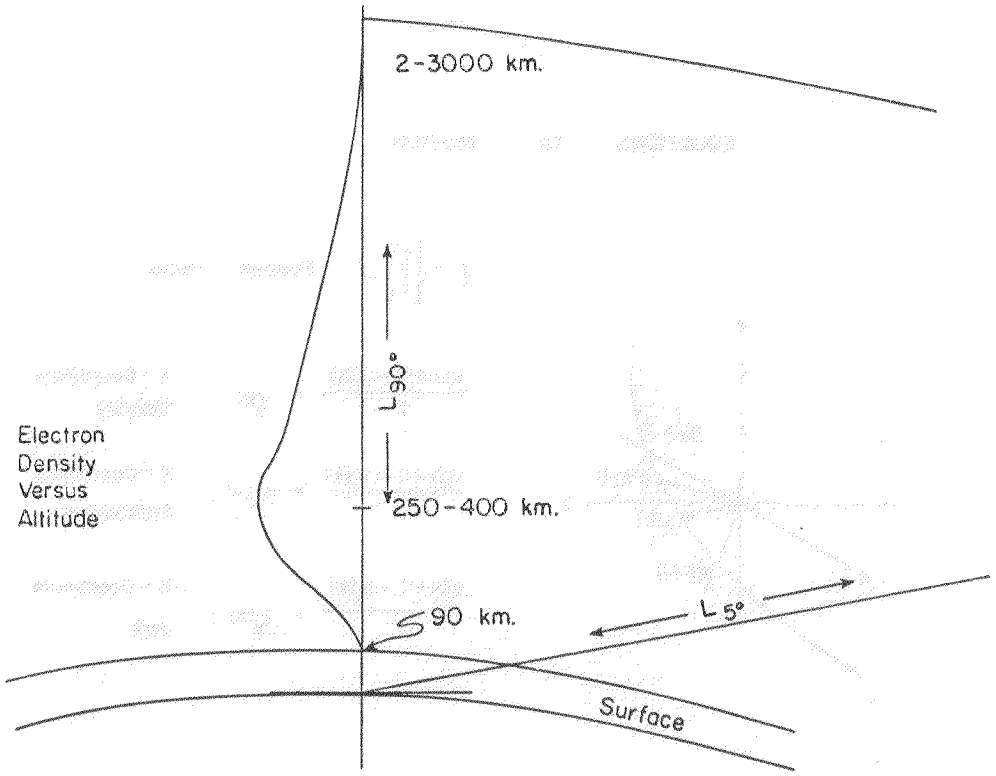

Figure III - 21

The velocity of an E-M wave propagating through the ionosphere is inversely proportional to the electron density (parts per cc.). Thus, excess time delay (over delay in vacuum) is minimum over the shortest path through the ionosphere and maximum over the longest path. Path lengths, and hence excess delay, increase monotonically with decreasing elevation angle to the satellite.

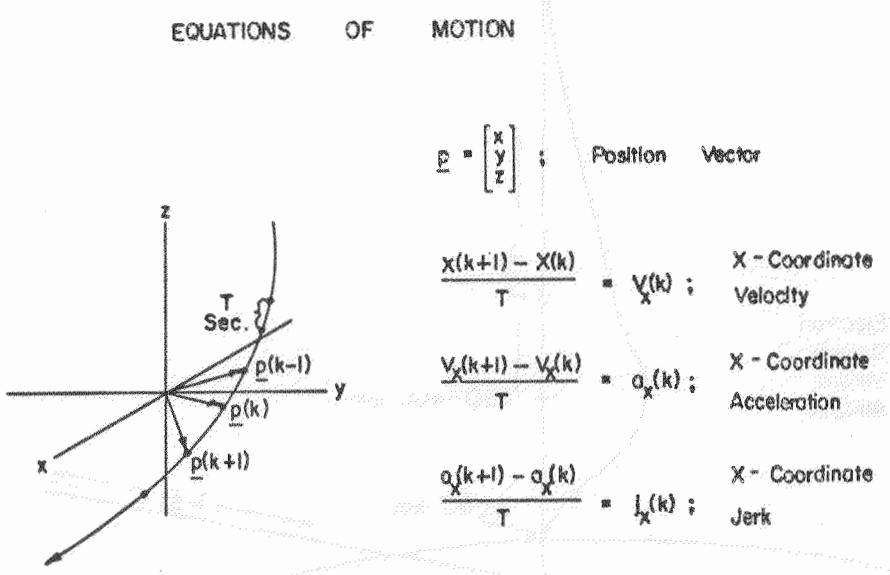

Figure III - 22

This shows a vehicle navigating in an x-y-z coordinate system. The trajectory is defined by a 3-vector, $\underline{p}(\cdot)$, whose argument, k, is sample number, based on samples every T seconds.

We model three "states" in each coordinate as position, velocity, and acceleration. A fourth state, "jerk", is defined but not modeled.

CANONICAL FORMS

$$X(k+1) = X(k) + T V_x(k) + 0 + 0$$
$$V_x(k+1) = 0 + V_x(k) + T a_x(k) + 0$$
$$a_x(k+1) = 0 + 0 + a_x(k) + T J_x(k)$$

$$\begin{bmatrix} X(k+1) \\ V_x(k+1) \\ a_x(k+1) \end{bmatrix} = \begin{bmatrix} 1 & T & 0 \\ 0 & 1 & T \\ 0 & 0 & 1 \end{bmatrix} \begin{bmatrix} X(k) \\ V_x(k) \\ a_x(k) \end{bmatrix} + \begin{bmatrix} 0 \\ 0 \\ T \end{bmatrix} \cdot J_x(k) \quad ; \text{ 3-State Model}$$

$$\begin{bmatrix} X(k+1) \\ V_x(k+1) \end{bmatrix} = \begin{bmatrix} 1 & T \\ 0 & 1 \end{bmatrix} \begin{bmatrix} X(k) \\ V_x(k) \end{bmatrix} \begin{bmatrix} 0 \\ T \end{bmatrix} \cdot a_x(k) \quad ; \text{ 2-State Model}$$

$$\underline{X}(k+1) = \underline{\Phi} \cdot \underline{X}(k) + \underline{\Gamma} \cdot w(k) \quad ; \text{ General Model}$$

Figure III - 23

The three coupled equations of motion in position, velocity, and acceleration are written in a canonical form which leads immediately to a vector-matrix form.

The 3-state model is a first-order vector difference equation, driven by the jerk input. The 2-state model is driven by the acceleration input.

Both models can be written in the same notation using appropriate vectors and matrices.

Note that these systems of equations are marginally stable due to Eigen-values (poles) on the unit circle, analagous to a filter with perfect integrators.

TRAJECTORY COORDINATE GENERATING MODEL

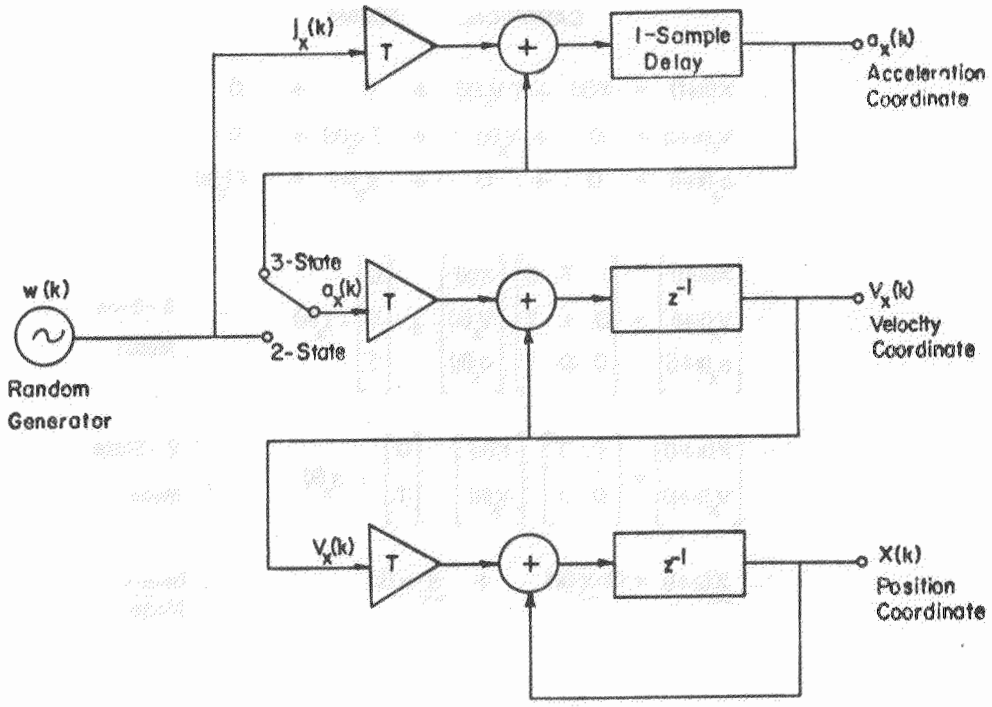

Figure III - 24

The Kalman Filter requires a model for the filter which could have generated the (Guassian, random, correlated) state-vector which is to be tracked. The 2-state or 3-state generator, corresponding to the previous equations is shown here. It is assumed to be driven by a white Gaussian random process at the input, which produces the various correlated states at the outputs. In the 2-state model, the input is interpreted as being acceleration, while for 3 states, the input is jerk. The variance of the input is set according to A Priori knowledge of the behavior of the states.

KALMAN MODELLING ASSUMPTIONS AND RESULTS

Driving Process W(k)	:	i) Gaussian ii) Independent Samples iii) Known Mean, Standard Deviation
Output Coordinates	:	i) Gaussian ii) Correlated Samples
Note	:	We will also assume that the input and output sequences are statistically stationary.

Figure III - 25

We assume that the dynamic capabilities of the vehicle (its jerk or acceleration) are not subject to radical changes. That is, we choose a standard deviation for the generator driving function (say jerk) which is the greatest value observed for the vehicle. It is assumed that the vehicle will then not exhibit jerk values greater than 3 or 4 times the chosen value.

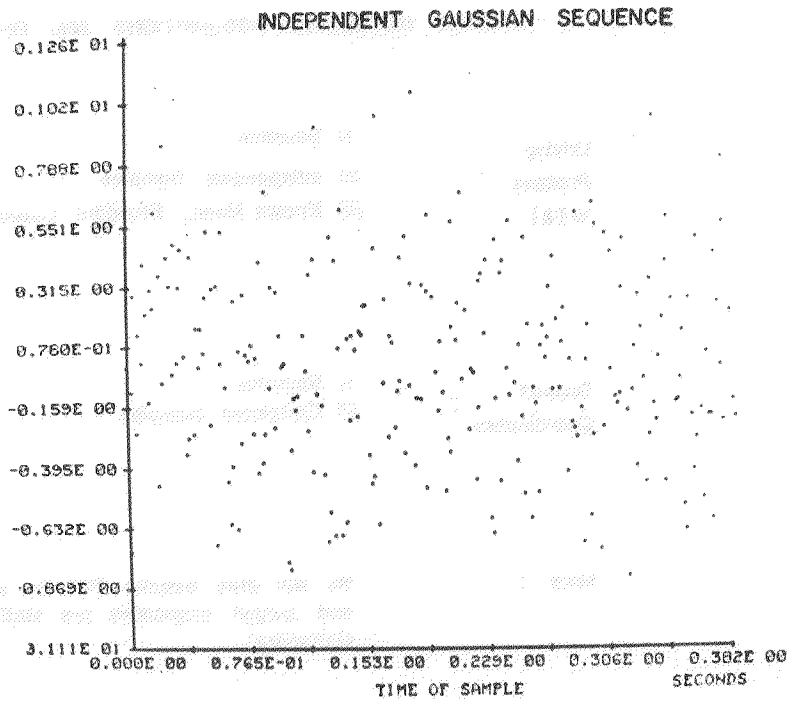

Figure III - 26

This shows an independent (white) Gaussian sequence of samples, having a mean value of zero and a standard deviation of around 0.3. There is no apparent pattern from one sample to the next.

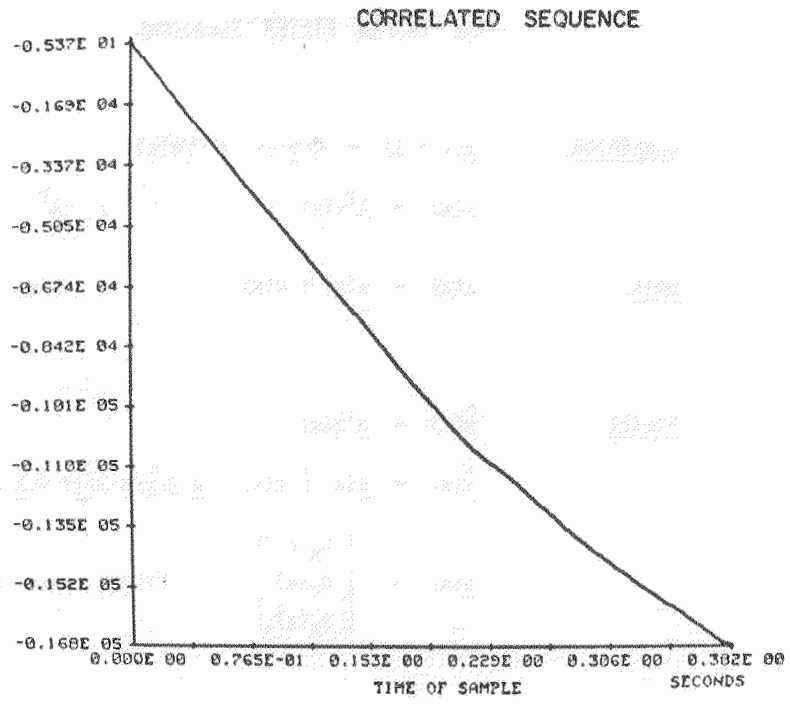

Figure III - 27

This shows a highly correlated sequence of samples.

THE KALMAN FILTER EQUATIONS

GENERATOR:

$$\underline{x}(k+1) = \Phi\,\underline{x}(k) + \underline{\gamma}w(k)$$

$$x(k) = \underline{\lambda}^T\underline{x}(k) \quad ; \quad \underline{\lambda}^T = [1,0,0]$$

DATA:

$$z(k) = x(k) + n(k) \quad ; \quad n(k) \text{ GAUSSIAN, INDEPENDENT NOISE SEQUENCE}$$

FILTER:

$$\hat{x}(k) = \underline{\lambda}^T\hat{\underline{x}}(k)$$

$$\hat{\underline{x}}(k) = \underline{g}(k)\left[z(k) - \underline{\lambda}^T\Phi\hat{\underline{x}}(k-1)\right] + \Phi\,\hat{\underline{x}}(k-1)$$

$$\underline{g}(k) = \begin{bmatrix} g_x(k) \\ g_v(k) \\ g_a(k) \end{bmatrix} \quad ; \text{ FILTER GAIN FUNCTIONS}$$

Figure III - 28

The equations for the standard Kalman filter are given in vector-matrix form. These are not too informative, and we will soon expand them to get a better view of the filter structure.

Note that we have employed an output vector, $\underline{\lambda}$, to obtain the position state from the state vector.

Also, we have defined the data sequence, z(k), which is input to the Kalman filter, as the sum of the true position, x(k), plus a white Gaussian noise, n(k).

THE STANDARD KALMAN EQUATIONS, EXPANDED

$$\left.\begin{aligned}
\hat{x}(k) &= \hat{x}(k-1) + T\hat{V}_x(k-1) + g_x(k)\left[z(k) - \hat{x}(k-1) - T\hat{V}_x(k-1)\right] \\
\hat{V}_x(k) &= \hat{V}_x(k-1) + T\hat{G}_x(k-1) + g_v(k)\left[z(k) - \hat{x}(k-1) - T\hat{V}_x(k-1)\right] \\
\hat{G}_x(k) &= \hat{G}_x(k-1) + g_g(k)\left[z(k) - \hat{x}(k-1) - T\hat{V}_x(k-1)\right]
\end{aligned}\right\rangle \text{3 - State Filter}$$

$$\left.\begin{aligned}
\hat{x}(k) &= \hat{x}(k-1) + T\hat{V}_x(k-1) + g_x(k)\left[z(k) - \hat{x}(k-1) - T\hat{V}_x(k-1)\right] \\
\hat{V}_x(k) &= \hat{V}_x(k-1) + g_v(k)\left[z(k) - \hat{x}(k-1) - T\hat{V}_x(k-1)\right]
\end{aligned}\right\rangle \text{2 - State Filter}$$

$\epsilon(k) = z(k) - \hat{x}(k-1) - T\hat{V}_x(k-1)$: Filter error term
Also called "Residual"
or "Innovation"

Figure III - 29

This is the expansion of the vector-matrix Kalman filter equations into coupled equation form for both the 2-state and 3-state filters. We see right away that this filter is of the predictor-corrector form. For instance, the present position coordinate consists of the previous position coordinate plus an incremental distance due to the previous velocity acting through intervening time, T, plus a correction factor based on the present measured input data, z(k). $\hat{x}(k-1) + T\hat{V}_x(k-1)$ is the predicted position coordinate. $z(k) - \hat{x}(k-1) - T\hat{V}_x(k-1)$ is the error, $\epsilon(k)$, between prediction and measured data. The correction is the error, weighted by the position "gain" function, $g_x(k)$. Likewise, the previous velocity and acceleration state estimates are also up-dated. Note that in each case, the error which is used is the position error.

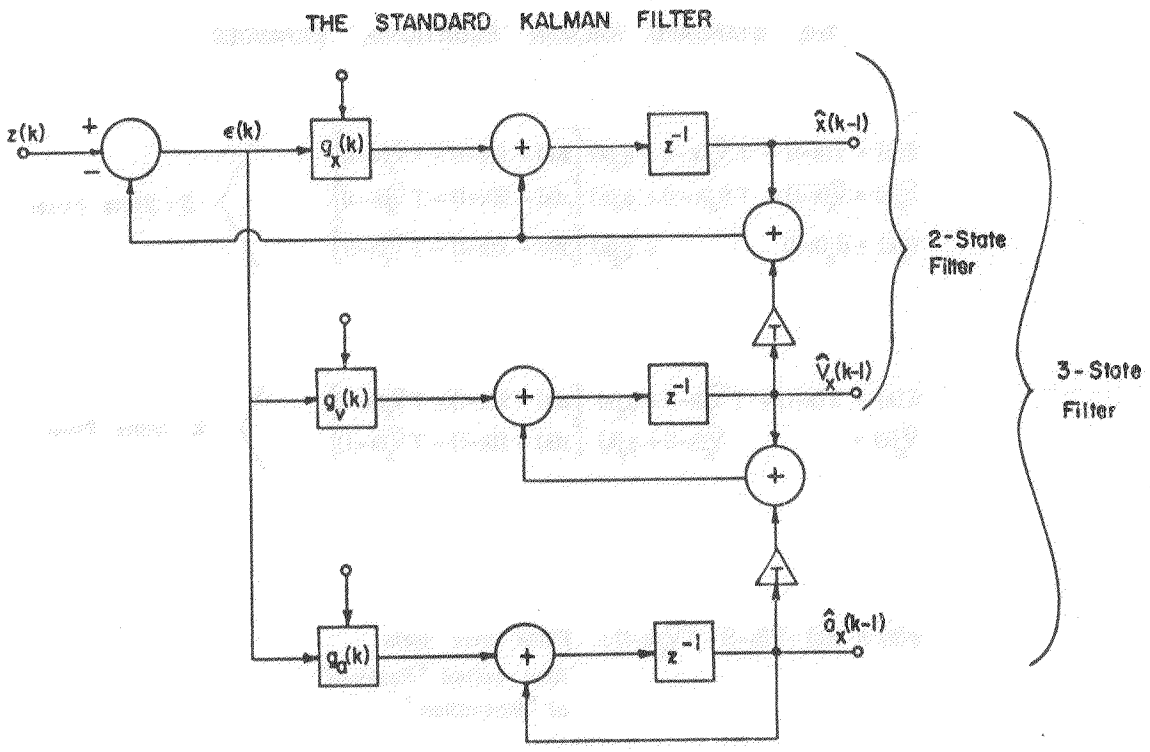

Figure III - 30

Here is the Kalman filter diagram. It shows explicitly that the filter is in feed-back form and has 3-poles for 3-states or 2-poles for 2-states. Since T, the time between samples is presumably fixed, the pole locations (in the z-plane) are functions of the three (or two) Kalman state gains, g_x, g_v, and g_a. It turns out that for the two pole filter, the poles are always within the unit circle in the z-plane (analogous to the left-half S-plane). Thus, the two-pole Kalman filter is stable, regardless of the choice of gain functions. This is not true for a poor choice of the gain function, for the 3-pole filter.

THE STANDARD KALMAN METER

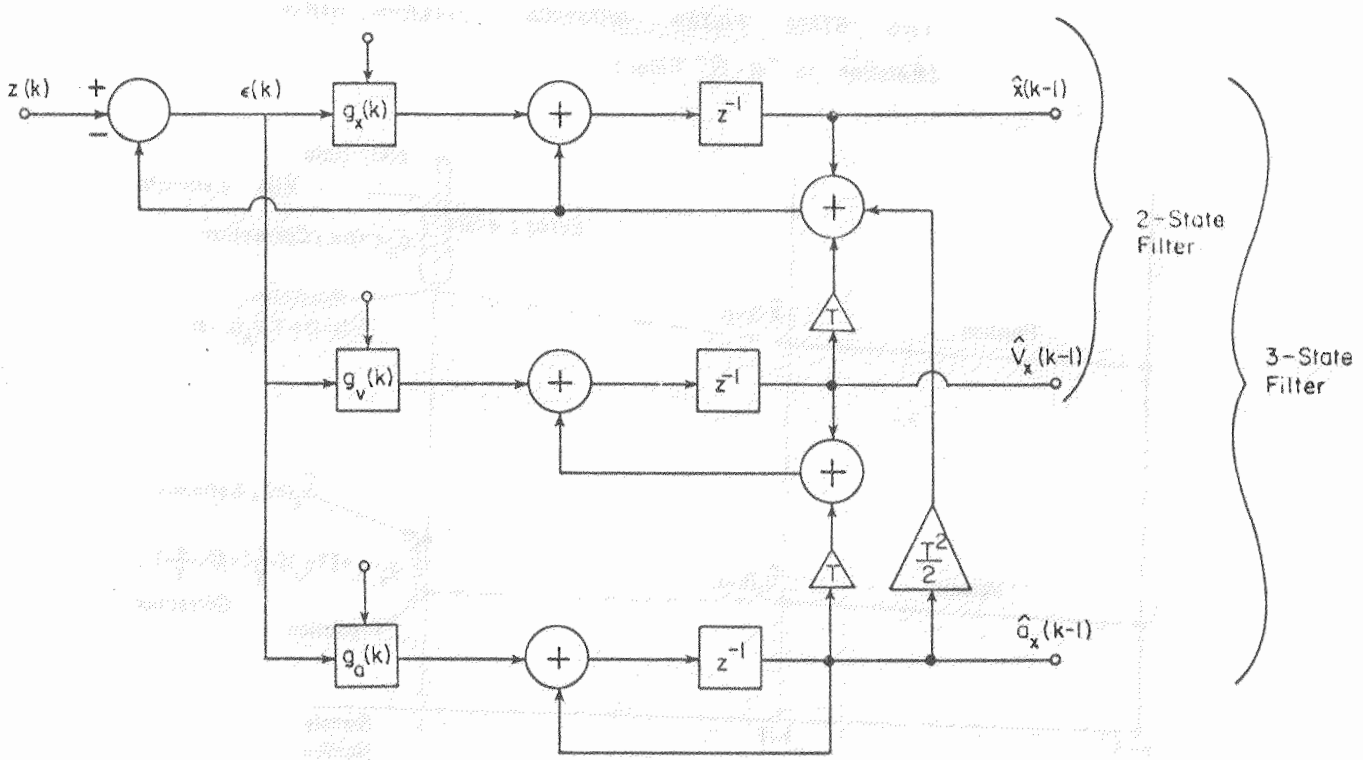

Figure III - 31

The preceding Kalman filter was obtained using fast-sampling approximations. When sampling is not fast with respect to the variations of the process being tracked, then the Trajectory Coordinate Generating Model of Figure III-16 is augmented to realize

$$\underline{\Upsilon} = \begin{bmatrix} T^3/6 \\ T^2/2 \\ T \end{bmatrix} \quad , \qquad \Phi = \begin{bmatrix} 1 & T & T^2/2 \\ 0 & 1 & T \\ 0 & 0 & 1 \end{bmatrix}$$

The resulting Kalman Filter then has one more element connecting the acceleration state to the position state.

TWO STATE FILTER GRAPHICAL INTERPRETATION

(Relation to "α - β" Filter)

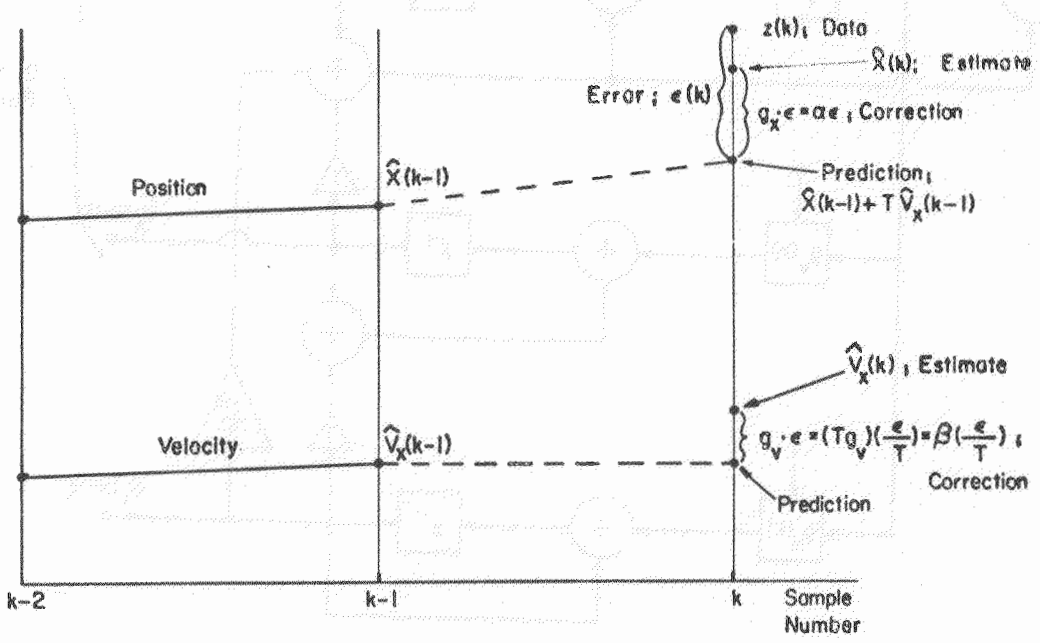

Figure III - 32

The so-called "α-β" filter is a version of the two-pole Kalman filter, where $\alpha = g_x$, $\beta = Tg_v$. The present position estimate is given as the predicted position estimate plus a correction due to the error, ε, weighted by α. Since ε/T is dimensionally an error in velocity (based on measured position), it may be weighted by β to correct the old velocity.

In the α-β filter, the weights α and β are not derived from the "optimum" Kalman gains, g_x and g_v. Rather, α and β are chosen in some intuition-based manner.

THE STANDARD KALMAN GAIN COMPUTATION

Define: $\tilde{\underline{x}}(k) = \underline{x}(k) - \hat{\underline{x}}(k)$; State filtering error

$v(k) = E\left\{\tilde{\underline{x}}(k)\,\tilde{\underline{x}}^T(k)\right\}$; State error covariance matrix

$\underline{g}(k) = \begin{bmatrix} g_x(k) \\ g_v(k) \\ g_a(k) \end{bmatrix}$; Filter gain function

$$\Phi = \begin{bmatrix} 1 & T & 0 \\ 0 & 1 & T \\ 0 & 0 & 1 \end{bmatrix} \quad , \quad \underline{\Delta} = \begin{bmatrix} 0 \\ 0 \\ T \end{bmatrix} \quad , \quad \underline{\lambda}^T = [1,0,0]$$

σ_n^2, Additive noise variance, σ_w^2; Generating variance

Compute: $v(k|k-1) = \Phi v(k-1)\,\Phi^T + \sigma_w^2 \underline{\Delta}\underline{\Delta}^T$

$$\underline{g}(k) = v(k|k-1)\,\underline{\lambda}\left[\sigma_n^2 + \underline{\lambda}^T v(k|k-1)\,\underline{\lambda}\right]^{-1}$$

$$v(k) = \left[I - \underline{g}(k)\,\underline{\lambda}^T\right] v(k|k-1)$$

$$v(0) = \begin{bmatrix} \sigma_x^2 & 0 & 0 \\ 0 & \sigma_v^2 & 0 \\ 0 & 0 & \sigma_a^2 \end{bmatrix} \quad ; \quad \text{Initial conditions}$$

Figure III - 33

The Kalman gains, g_x, g_v, g_a, which are elements of the Kalman gain vector, $\underline{g}$, are computed in closed form from a vector-matrix recursion which is known as a Ricatti equation. The gain computation is based on a defined square matrix of the covariances of the state filtering errors. These variances are computed along with the optimum gains for minimizing the error variance, in a closed 3-step computation at each sample time. The computation is initialized with the values of the variances of the true states themselves, as taken from the generating model. The gains vary initially in such a manner as to minimize the variances of the tracking errors during the initial turn-on transient of the filter. Subsequently, the gain values, g_x, g_v, and g_a will asymptoticallly approach steady state values,provided that the noise statistic, σ_n^2, and model structure, σ_ω^2, $\underline{\gamma}$, Φ, $\underline{\lambda}$ do not change with time. The steady-state gains yield the steady-state Kalman (or Wiener) filter.

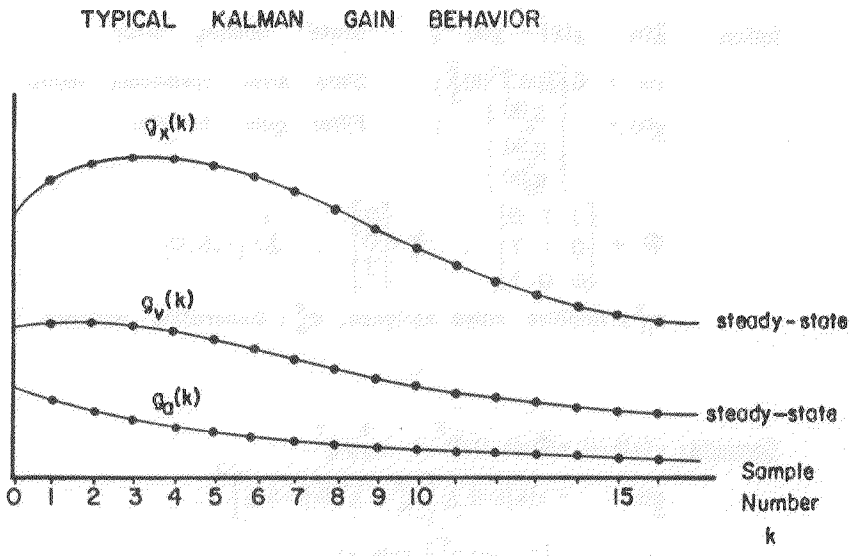

Figure III - 34

This is just a picture of the typical behavior of the closed-form Kalman gain computation. You can see the transient behavior, as well as the approach of the gains to their steady-state (Wiener) values.

KALMAN FILTER DIFFICULTIES

Insufficient A Priori Knowledge for Gain Computation :
σ_n^2 - Additive Noise Variance
σ_w^2 - Coordinate Generating Variance
v(0) - Initial Condition

Model Failure :
X(k), $V_x(k)$, $a_x(k)$ not Gaussian

Filter Tracking Failure (Divergence) :
Gains become too small
Filter shuts off input, ignores data
Poles move outside unit circle

Figure III - 35

Using the Kalman filter is difficult, especially for navigation problems, since the real situation seldom fits the assumed model. In navigation the measured data is not generally a linear function of the true state, being tracked. But since the optimum filter for non-linear problems hasn't been solved, we generally try to just modify the Kalman filter.

A major problem is that the "optimum" gain calculation usually gives the "wrong" gains for the non-linear problem. A 3-pole filter may even become unstable. At the very least, the tracking error variances are not usually minimized.

THE ADAPTIVE KALMAN FILTER

- Monitor the actual filter tracking error , $\epsilon(k)$
- Modify the Kalman gain equation:

$$g(k) = v(k|k-1)\,\underline{\lambda} \cdot f(\epsilon(k))$$

- Choose $f(\epsilon(k))$ to
  - decrease gain for increasing zero-mean error
  - increase gain for increasing bias (tracking) error
- Gains set according to actual error
- Accomodates Model Failure

IT WORKS !!

Figure III - 36

A part of the solution to the "wrong gain" problem with the Kalman filter is to incorporate the "real" measurement error, $\varepsilon(k)$, into the usually closed form gain calculation. This makes the filter "adaptive" to the true error. There is no standard way to do this due to the lack of a mathematical analysis. Intuition and creativity are called for on the part of the designer. Some very good adaptive gain algorithms have been produced by various contractors.

ADAPTIVE KALMAN VERSUS "α - β" FILTER

- α β GAINS FIXED FOR WORST CASE DYNAMICS
  - TRADE NOISE VERSUS DYNAMICS PERFORMANCE
  - HIGH DYNAMICS SETS HAVE WORSE NOISE PERFORMANCE
- ADAPTIVE KALMAN FILTER GAINS ADJUSTED BY ERROR
  - GOOD NOISE PERFORMANCE FOR LOW DYNAMICS
  - GOOD DYNAMICS PERFORMANCE FOR LOW NOISE

Figure III - 37

An α-β filter uses fixed gains, generally chosen by "cut-and-try" for some particular vehicle, to minimize the worst type of error. In GPS use for aircraft, the worst error is that due to aircraft manuvers. Thus, fixed gains are chosen which handle the maneuver (dynamics) error but are not optimum for the white receiver noise.

An adaptive Kalman filter adjusts the gains to minimize whatever error is worst at the moment. Whether it truly minimizes the real error variance is problematical and unknown at the present time. (Fruitful for research).

GPS EXTENDED KALMAN FILTER

- Data is in Wrong Form for Standard Filter
  Noisy Range Measurements
  Filter Requires Noisy Coordinate Measurements

- $\underline{R}(k) = \begin{bmatrix} R_1(k) \\ R_2(k) \\ R_3(k) \\ R_4(k) \end{bmatrix} + \begin{bmatrix} n_1(k) \\ n_2(k) \\ n_3(k) \\ n_4(k) \end{bmatrix}$

$$= \begin{bmatrix} f(\underline{\rho}(k), \underline{\rho}_1(k)) \\ f(\underline{\rho}(k), \underline{\rho}_2(k)) \\ f(\underline{\rho}(k), \underline{\rho}_3(k)) \\ f(\underline{\rho}(k), \underline{\rho}_4(k)) \end{bmatrix} + \underline{n}(k) = \underline{f}(\underline{\rho}(k), \underline{\rho}_i(k)) + \underline{n}(k)$$

- $\underline{\rho}(k) = \begin{bmatrix} x(k) \\ y(k) \\ z(k) \\ b(k) \end{bmatrix}$; User state-vector, including clock, b(k).

$$\underline{\rho}_i(k) = \begin{bmatrix} x_i(k) \\ y_i(k) \\ z_i(k) \end{bmatrix} \quad ; \quad \text{ith satellite position vector.}$$

Figure III - 38

For the case where the measured data is not a linear function of the true states to be tracked, the Kalman filter is modified into the "Extended Kalman Filter," usually with an adaptive gain algorithm.

In the GPS case, the measured data consists of a vector of four measured ranges between vehicle and four selected satellites. Mathematically, the measured vector is a non-linear function of the true vehicle position coordinates (including the fourth coordinate of clock bias) and satellite coordinates, plus white receiver noise.

GPS EXTENDED KALMAN FILTER, CONT'D

- Linearize the Navigation Problem

$$\underline{R}(k) \cong \hat{\underline{R}}(k|k-1) + H(k)\left[\underline{p}(k) - \hat{\underline{p}}(k|k-1)\right] \quad ; \text{ Taylor Series Expansion}$$

where $\hat{\underline{R}}(k|k-1) = \underline{f}(\hat{\underline{p}}(k|k-1), \underline{p}_i(k))$; Predicted Range Vector

$$H(k) = \left.\frac{\partial \underline{f}(\underline{p}(k), \underline{p}_i(k))}{\partial \underline{p}(k)}\right|_{\hat{\underline{p}}(k|k-1)} \quad ; \text{ Jacobian Matrix}$$

$\hat{\underline{p}}(k|k-1) = \hat{\underline{x}}(k-1) + T\hat{\underline{v}}(k-1)$; Predicted State-Vector

- Transform the Range Vector

$$H^{-1}(k)\left[\underline{R}(k) - \hat{\underline{R}}(k|k-1)\right] = \underline{p}(k) - \hat{\underline{p}}(k|k-1) \triangleq \underline{\varepsilon}(k)$$

- Identify $\underline{\varepsilon}(k)$ as the Kalman Filter Error

Figure III - 39

The first step in extending the Kalman filter is to linearize the navigation problem. The 4-vector of ranges is expanded in a two-term Taylor series about an assumed range vector. This results in a linear transformation between a differential range vector (called delta pseudo-range) and a differential user coordinate vector. The transformation matrix is the Jacobian matrix which plays the part of the first derivative in a scalar Taylor series. This is the ubiquitous H-matrix which figures prominently in GDOP calculations.

Next, the H-matrix is inverted to give the user differential coordinate vector as a linear transformation of the delta pseudo-ranges.

The final step is to identify the differential user coordinate vector as a vector of Kalman filter errors, or residuals.

GPS EXTENDED KALMAN FILTER DIAGRAM

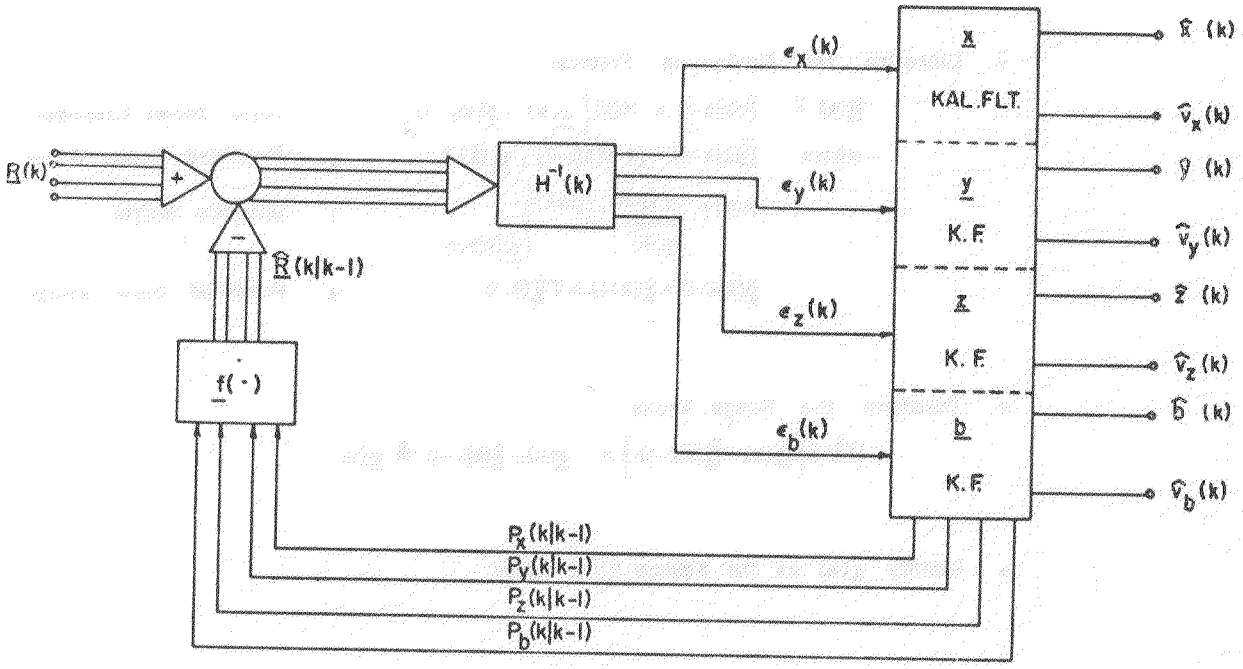

Figure III - 40

It immediately follows that the extended Kalman filter for GPS consists of four independent Kalman filters, each of whose tracking errors are the corresponding outputs of the H^{-1} (Inverse Jacobian) matrix. The assumed range vector, used for linearization to form the delta pseudo-ranges is computed from the predicted position outputs of the filters, using the non-linear function, $f(\cdot)$.

SINGLE CHANNEL SEQUENTIAL EXTENDED KALMAN FILTER

$$GH^{-1}\delta\underline{R} = G \begin{bmatrix} L_{11} & L_{12} & L_{13} & L_{14} \\ L_{21} & \cdot & \cdot & \cdot \\ L_{31} & \cdot & \cdot & \cdot \\ L_{41} & \cdot & \cdot & L_{44} \end{bmatrix} \begin{bmatrix} \delta R_1 \\ \delta R_2 \\ \delta R_3 \\ \delta R_4 \end{bmatrix} = \begin{bmatrix} \underline{G}_1 & 0 & 0 & 0 \\ 0 & \underline{G}_2 & 0 & 0 \\ 0 & 0 & \underline{G}_3 & 0 \\ 0 & 0 & 0 & G_4 \end{bmatrix} \begin{bmatrix} \sum_{I=1}^{4} L_{1I}\delta R_I \\ \cdot \\ \cdot \\ \sum_{I=1}^{4} L_{4I}\delta R_I \end{bmatrix} =$$

$$= \begin{bmatrix} \underline{G}_1 \sum_{I=1}^{4} L_{1I}\delta R_I \\ \cdot \\ \cdot \\ \underline{G}_4 \sum_{I=1}^{4} L_{4I}\delta R_I \end{bmatrix} = \begin{bmatrix} \underline{G}_1 L_{11}\delta R_1 \\ \underline{G}_2 L_{21}\delta R_1 \\ \underline{G}_3 L_{31}\delta R_1 \\ \underline{G}_4 L_{41}\delta T_1 \end{bmatrix}^{K} + \begin{bmatrix} \cdot \\ \cdot \\ \cdot \\ \cdot \end{bmatrix}^{K+1} + \begin{bmatrix} \cdot \\ \cdot \\ \cdot \\ \cdot \end{bmatrix}^{K+2} + \begin{bmatrix} \underline{G}_1 L_{14}\delta R_4 \\ \underline{G}_2 L_{24}\delta R_4 \\ \underline{G}_3 L_{34}\delta R_4 \\ \underline{G}_4 L_{44}\delta R_4 \end{bmatrix}^{K+3}$$

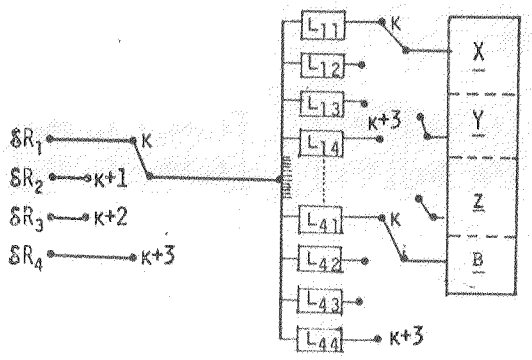

Figure III - 41

The extended Kalman filter previously shown was for a four-channel receiver where all four measured ranges were available simultaneously. For a single channel receiver, the ranges are measured sequentially and the delta pseudo-ranges are input sequentially. However, each delta pseudo-range goes into all four of the Kalman filters. The input into the ith Kalman filter from the jth satellite is weighted by the i-jth element of the H^{-1} matrix. The effect of this is that each time a measurement is read in, the particular user coordinate is corrected along the line of sight to the satellite providing the range measurement (ignoring the effect of clock bias).

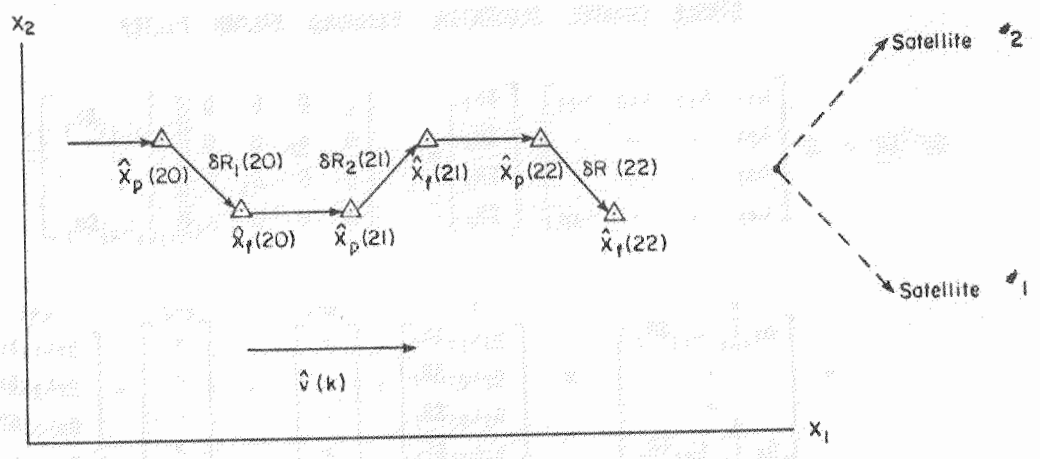

$$\underline{\delta X} = H^{-1}\,\underline{\delta R}$$

$$\begin{bmatrix}\delta X_1\\ \delta X_2\end{bmatrix} = \begin{bmatrix}\ell_{11} & \ell_{12}\\ \ell_{21} & \ell_{22}\end{bmatrix}\begin{bmatrix}\delta R_1\\ \delta R_2\end{bmatrix} = \begin{bmatrix}\ell_{11}\delta R_1 + \ell_{12}\,\delta R_2\\ \ell_{21}\delta R_1 + \ell_{22}\,\delta R_2\end{bmatrix} = \begin{bmatrix}\ell_{11}\\ \ell_{21}\end{bmatrix}\delta R_1 + \begin{bmatrix}\ell_{12}\\ \ell_{22}\end{bmatrix}\delta R_2$$

Figure III - 42

The hypothetical action of a two-dimensional filter, navigating in the X_1-X_2 plane, is shown with sequential measurements from two satellites in the plane. $\hat{X}_p(\cdot)$ denotes the predicted position before range measurement, $\delta R(\cdot)$. $\hat{X}_f(\cdot)$ denotes filtered position after range measurement, $\delta R(\cdot)$. The prediction is obtained from the last filtered value using the estimated velocity, $\hat{v}(\cdot)$. Note that when a delta-range measurement from a particular satellite is applied to a predicted position, it is applied in the line-of-sight direction (or counter to it) from the predicted position to that particular satellite.

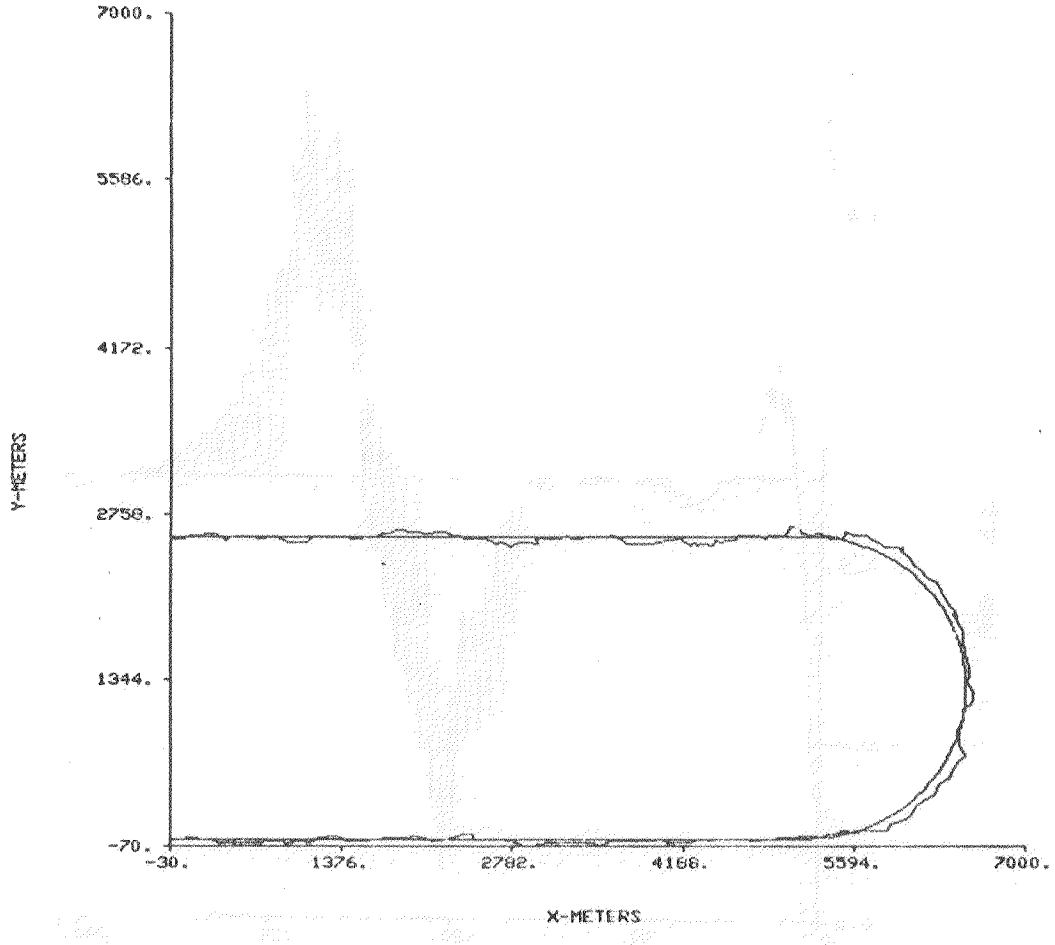

Figure III - 43

On this figure are superimposed the outputs of the X and Y Kalman filter (3 poles) upon the projection of the true trajectory in the X-Y plane. The aircraft flies horizontally through a left-hand turn at 6 degrees per second and 250 Knots airspeed. The time bias is set at a constant 30 meters, equivalent. Four satellites are placed, three along the primary X-Y-Z axes, and the fourth to achieve a GDOP of 1.63. Noisy satellite range measurements are read in sequentially with a sampling interval of 0.43 seconds. Range measurement noise is white, zero-mean, with a standard deviation of 50 meters. The filter utilizes an adaptive gain function, driven by the filter's prediction error.

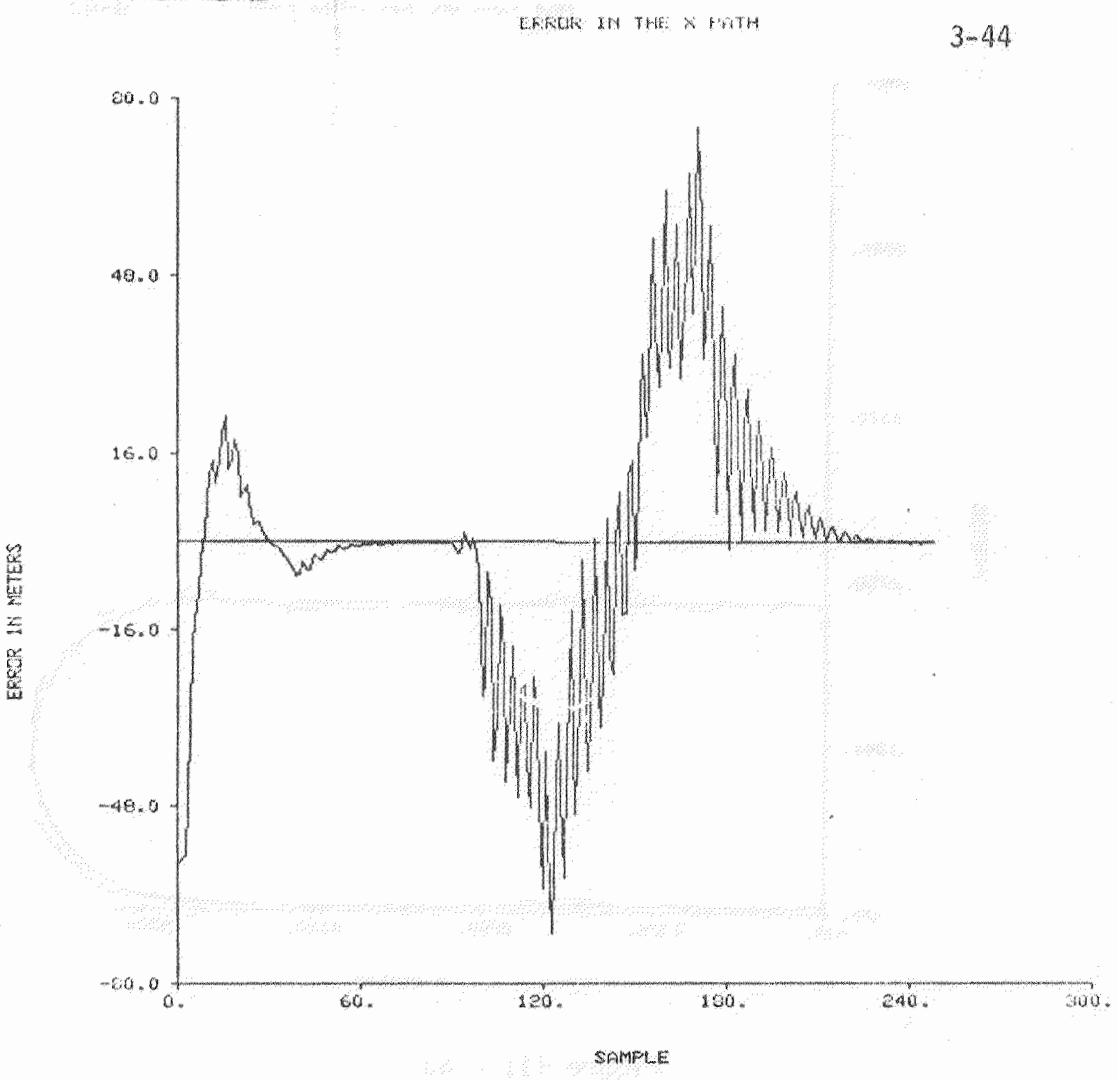

Figure III -44

The operation of the filter without additive noise is shown above. The initial turn on transient dies out just as the aircraft enters the turn. It is seen that the X filter"leads" the aircraft all through the turn. (Error = $x-\hat{x}$). The action induced by the sequencing from satellite to satellite is clearly visible. The maximum error is about 75 meters.

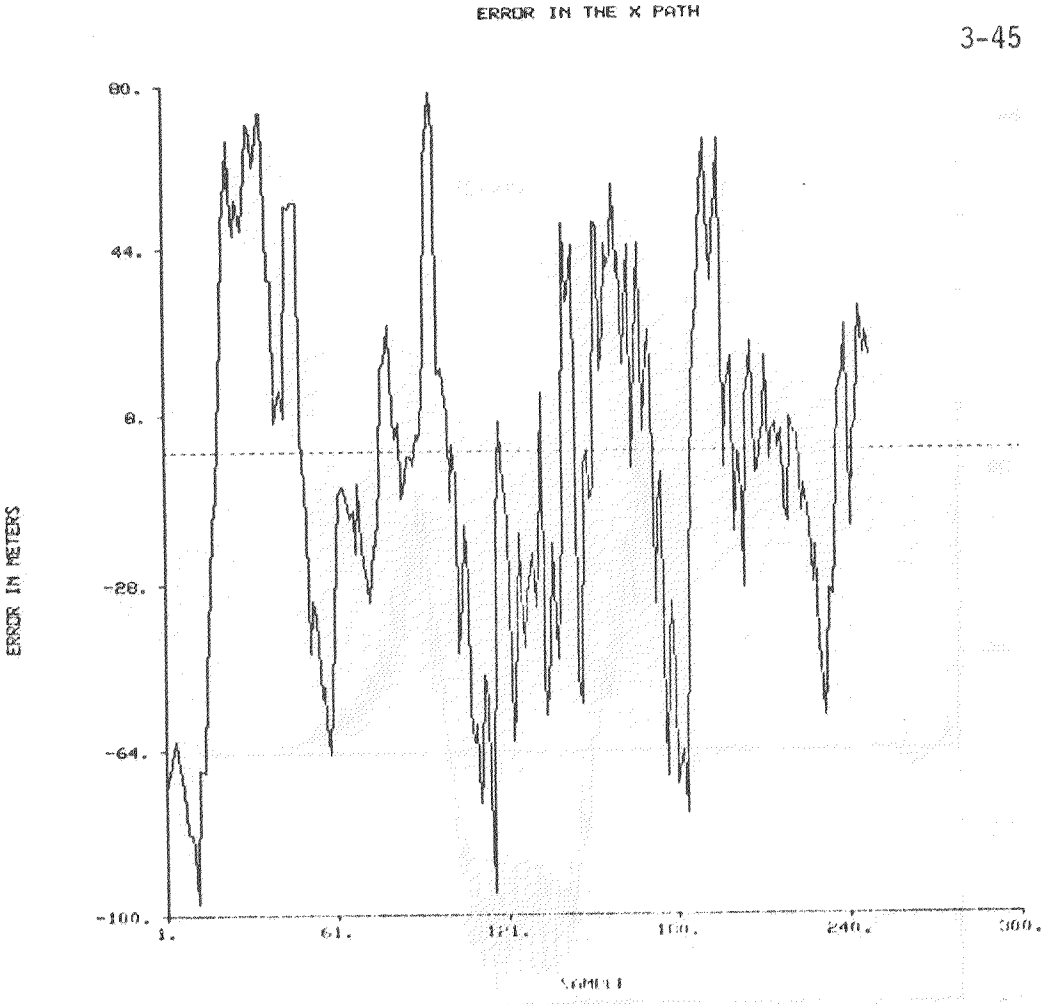

Figure III - 45

The operation of the filter with additive noise is not as easily viewable as without noise. The peak error is less than 100 meters. Some effects of the turn dynamics are still visible, but the entire trace now appears more noiselike.

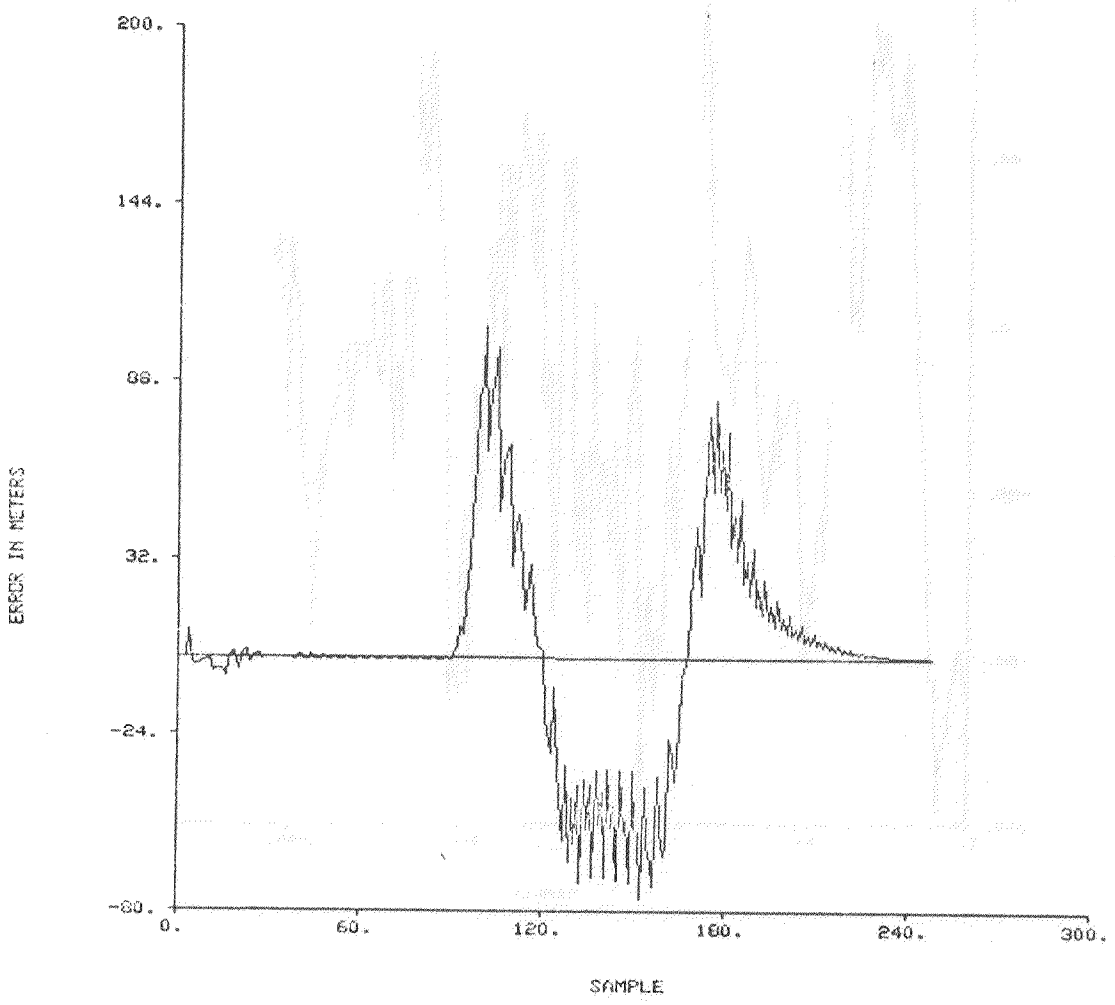

Figure III - 46

In the Y-component, without noise, the filter first lags, then leads, then lags the aircraft. The non-linear action of the adaptive gain is readily seen between samples 120-180. Maximum error is about 100 meters.

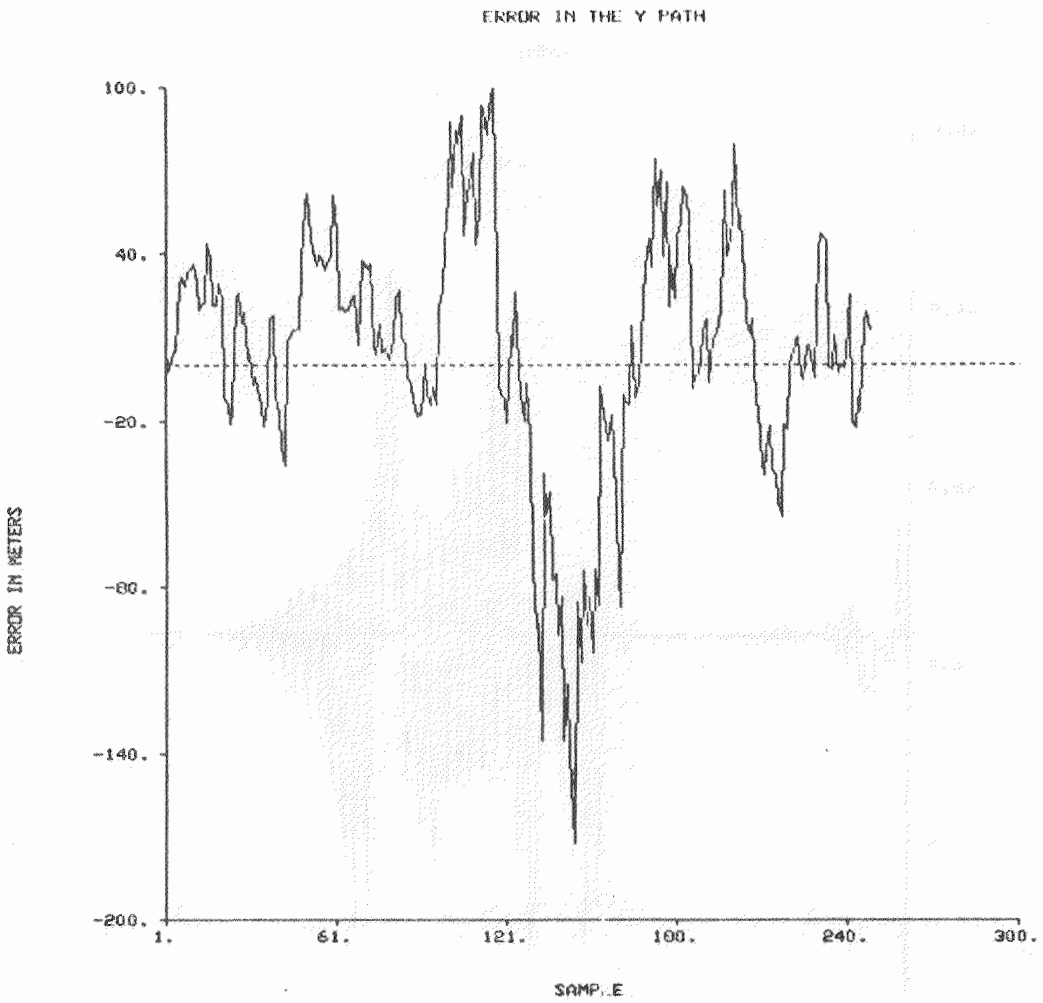

Figure III - 47

In the Y-component, with noise, the turn-induced dynamic error is still visible. Here, a noise peak has driven the maximum error to about 170 meters.

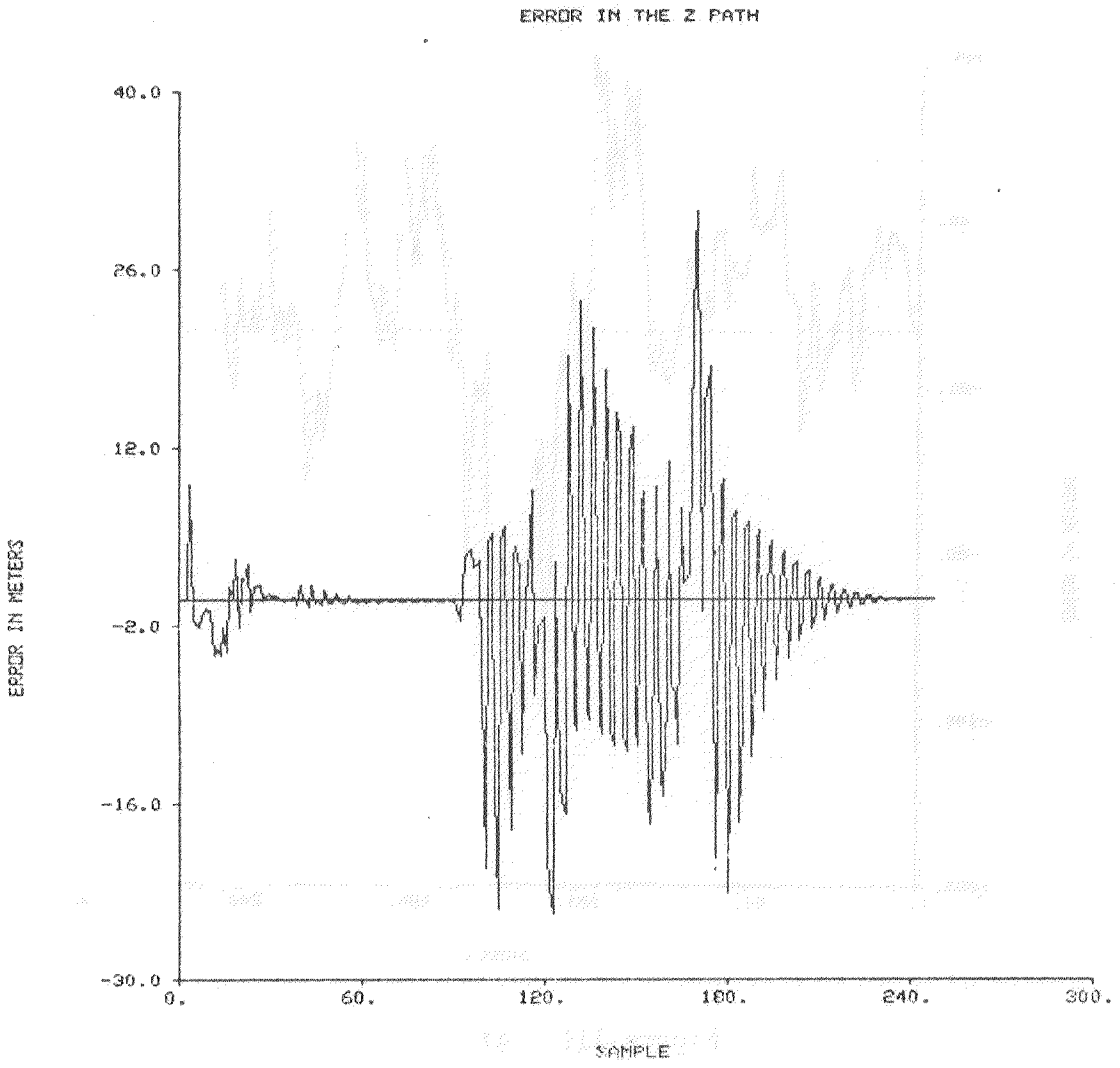

Figure III - 48

In the noise-free case the dynamic error coupled into the Z-component (altitude) is small, being less that 30 meters. Note that the aircraft is flying at a constant altitude. The occurrence of the error is due to the prediction error in X and Y being coupled into pseudo-range prediction error.

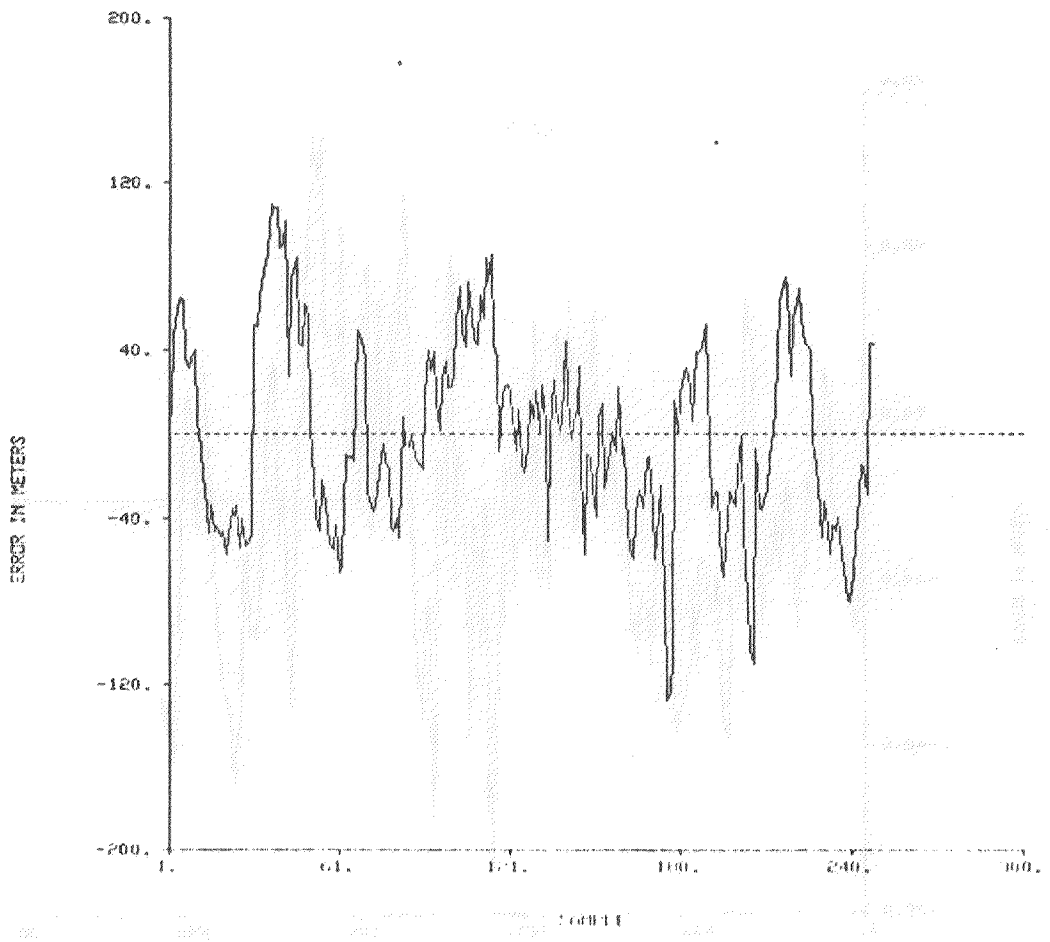

Figure III - 49

With noise, the Z-component error becomes commensurate in magnitude with the X and Y errors. The maximum Z error is about 120 meters.

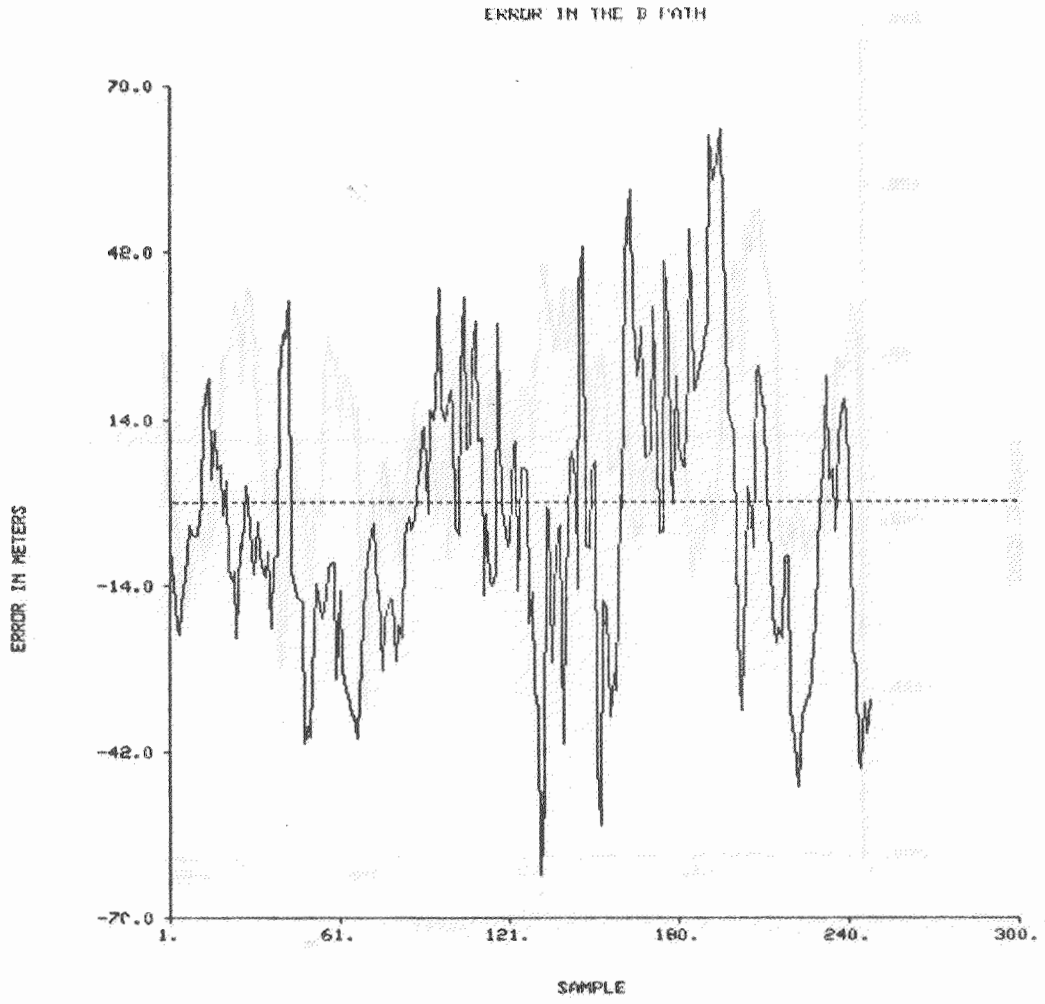

Figure III - 50

The Time Bias filter error in the noisy case has a maximum of roughly 70 meters equivalent.

RANGE MEASUREMENT EXAMPLE

Given a user estimated 20,000,000 meters from a GPS Satellite, the initial range estimate produces a C/A code pre-position at the 682nd chip, as:

$c = 3 \times 10^8$ mps

$\delta t = 20{,}000{,}000 \text{ m} / 3 \times 10^8 \text{ mps} = 66.66667 \text{ msec}$

$= 66\ 2/3$ epochs of the C/A code

1023 chips x 2/3 = 682nd chip!

Now assume that the GPS receiver can measure the received C/A code phase to 0.1 chip, and that the measured code phase is at 743.6 chips from the beginning of the code. (This implies a search of over 60 chips -- an unrealistic large range for most receivers, following initial acquisition.)

This measurement places the user 218,064.5 m from the nearest C/A code uncertainty point, as:

$$\frac{743.6}{1023} \times \frac{3 \times 10^8 \text{ mps}}{1 \text{ msec}} = 218{,}064.5 \text{ meters!}$$

The initial estimate placed the user at 66+ epochs of the code. Using that estimate, the user range is measured as:

66 x 300,000 m + 218,064.5 = 20,018,064.5 meters!

The measurement is within $\pm$ 29.3 meters (0.1 C/A code chip).

USING THE HAND-OVER WORD....

Given the following data stream from a GPS Receiver --

01110100001111111100000001011110010000000000110111100.....

with the subframe known to begin at the left end of the above data stream.

What time is it? Give day of week and time of day. Assume that the receiver is located in the same time zone that you are.

SYNCHRONIZING THE GPS RECEIVER

1. Initial Acquisition of the C/A Code (Rough frequency and code lock)

2. Refine the Frequency Lock -- Frequency Tracking (AFC)

3. Refine the Phase Lock -- Phase Tracking (PLL)

4. Refine the Code Lock -- Code Tracking (Early/Late or Tau Dithering)

5. Data Bit Synchronization (finding the bit edges)

6. Subframe Synchronization (finding the TLM word)

7. Frame Synchronization and Data Acquisition

8. Handover to the P Code by using the HOW Word

THE GPS TIMING "CHAIN"

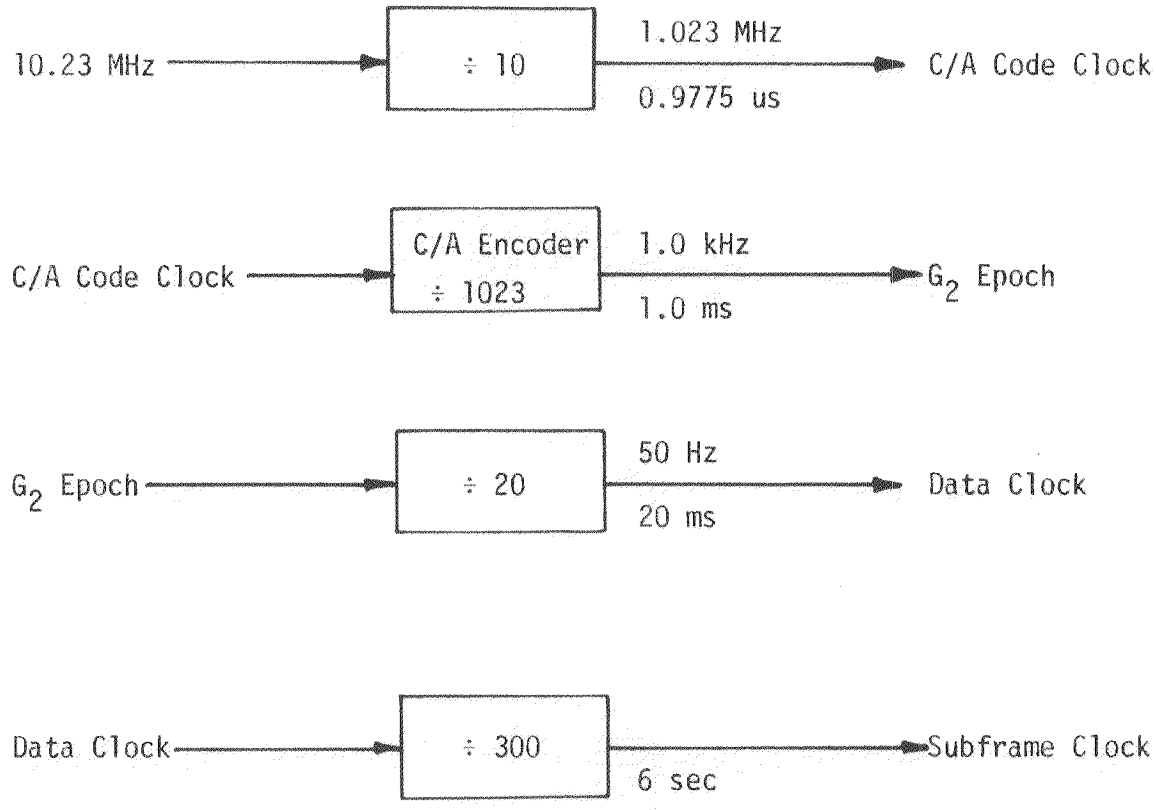

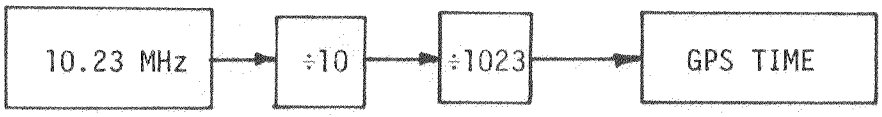

SETTING THE GPS "CLOCK"

DAY OF THE WEEK	HOURS	MINUTES	SECONDS	:X X X X X X X X ...

USING THE GLOBAL POSITION SATELLITE SYSTEM FOR POSITIONING AND NAVIGATION

Evaluation and Commentary:

Please fill in the following information about your reactions to this short course. Rank these comments from 10 (Good) to 1 (Poor).

	First Day	Second Day	Third Day
Level of Presentation	[ ]	[ ]	[ ]
Organization	[ ]	[ ]	[ ]
Clarity	[ ]	[ ]	[ ]
Pace of Presentation	[ ]	[ ]	[ ]
Notes	[ ]	[ ]	[ ]
Visual Aids	[ ]	[ ]	[ ]
Responsiveness to Questions	[ ]	[ ]	[ ]

Please add any comments which you feel will be of value to the instructors.

_____

_____

_____

Thank you for your assistance.

FAA WJH Technical Center
Tech Center Library
Atlantic City, NJ 08405

2-4 Meter
200 Meter 2 set to 7-8 meter.
6 Set, Up — one strange
20 Water
20 m meter from [illegible]
66-8 mo.

FAA WJH Technical Center
Tech Center Library
Atlantic City, NJ 08405